OUTLET STRUCTURE

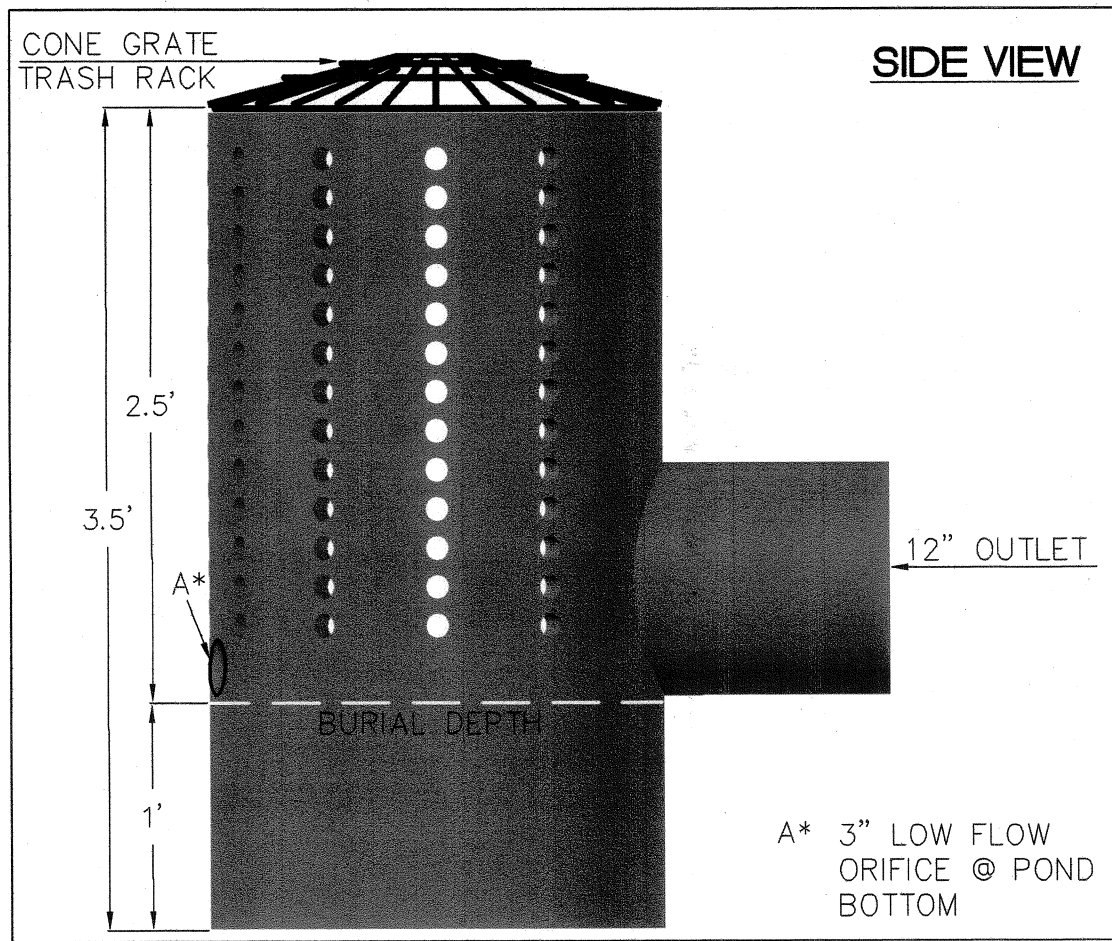

SIDE VIEW

A* 3" LOW FLOW ORIFICE @ POND BOTTOM

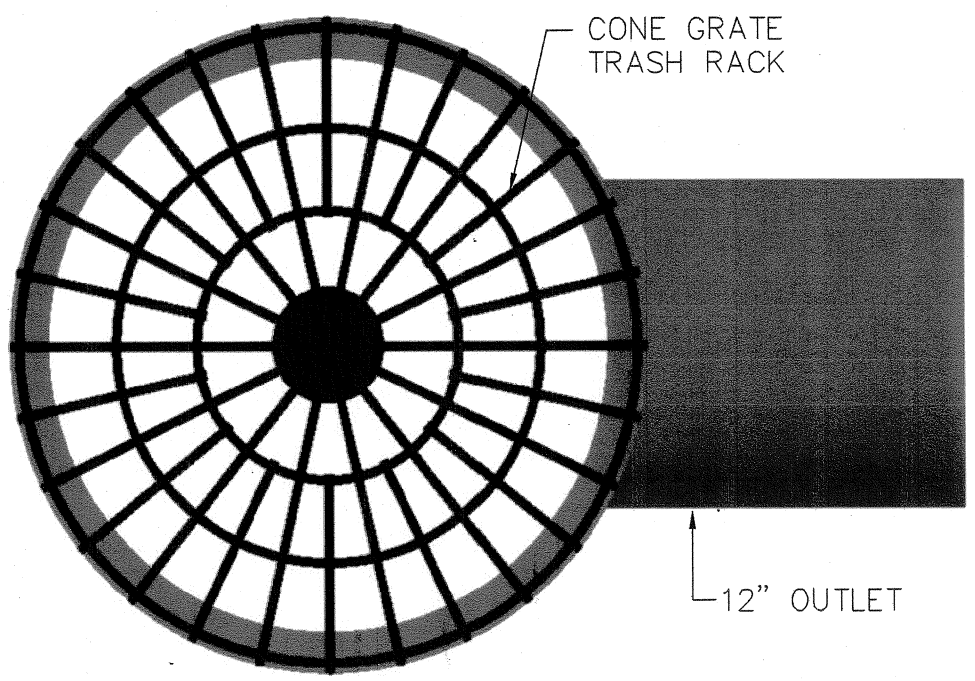

TOP VIEW

SPECIFICTIONS

1. RISER: 24" DIAMETER SHEDULE 40 P.V.C. WITH UV INHIBITOR

2. CONE GRATE TRASH RACK HAALA INDUSTRIES (SEE ATTACHED) – OR EQUIVALENT

3. 3" LOW FLOW ORIFICE TO BE FLUSH WITH POND BOTTOM

4. ORIFICE ARRAY: 1.25" DIAMETER HOLES, 13 ROWS X 10 COLUMNS. BOTTOM EDGE OF FIRST ROW 0.25' FROM POND BOTTOM. SUCCESSIVE ROWS SPACED 2.0" ON CENTER. COLUMN SPACING 5.0" ON CENTER.

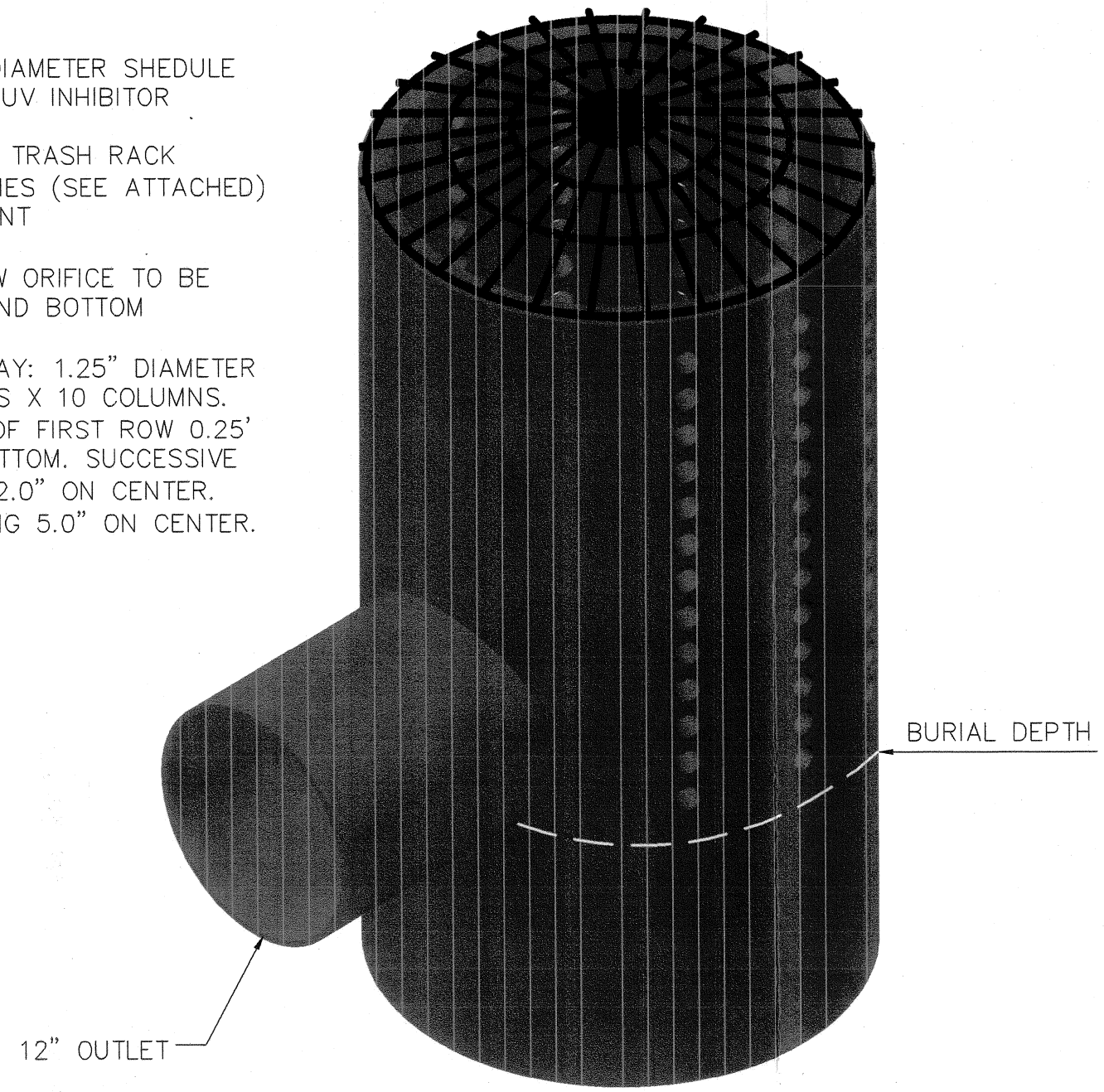

ISOMETRIC VIEW