MONTECITO RANCH

APPENDIX J

STORM WATER MANAGEMENT PLAN

for the

DRAFT FINAL ENVIRONMENTAL IMPACT REPORT

SP01-001; VTM 5250RPL6; P04-045; P09-023; GPA 04-013; R04-022;
STP 08-019; ER 09-013; LOG NO. 01-09-013; SCH NO. 2002021132

APRIL 2010

APPENDIX J – STORM WATER MANAGEMENT PLAN
INFORMATION FOR THE READER

This document consists of the Storm Water Management Plan (SWMP) for the Montecito Ranch Project (Proposed Project or Project) and analyzes storm water-related elements associated with construction and operation of the Project. Since circulation of the Draft Environmental Impact Report (EIR) of the Proposed Project and associated technical reports, there have been some changes in Project description.

The SWMP that circulated with the Draft EIR indicated that a 10.6-acre future school site would be located off of future Montecito Ranch Road in the vicinity of the proposed parks and wastewater reclamation facility. At this time, this use is being eliminated from the Final EIR, and hence the SWMP. Any graphic or text references to the future school site should be ignored by the reader. Upon Project approval, the future school site will be excluded from the Project and placed into open space. This alteration in the Project description would not change the conclusion with regard to the level of significance of impacts because removal of the future school site and placement into open space would be beneficial as the Proposed Project would result in fewer acres of impervious surface than analyzed in the report, and therefore, less runoff would occur.

The above-cited revision is now included as part of the public record and will be before the Board of Supervisors during their consideration of the Project.

STEVENS · CRESTO ENGINEERING, INC.

STORM WATER MANAGEMENT PLAN

Permit No. TM 5250 RPL4

MONTECITO RANCH

COUNTY OF SAN DIEGO

Prepared for:
MONTECITO RANCH, LLC
402 West Broadway, Suite 1320
San Diego, CA 92101-3542

Prepared By:
STEVENS CRESTO ENGINEERING INC.
9665 Chesapeake Drive, Suite 320
San Diego, CA 92123

June 18, 2004
Revised: January 15, 2008
SCE NO. 02012.05

©Stevens Cresto Engineering, Inc. 2008

TABLE OF CONTENTS

TOPIC	SECTION
REPORT BODY	1
ATTACHMENT "A" – LOCATION MAP	2
ATTACHMENT "B" – PROJECT SITE MAP	3
ATTACHMENT "C" – RELEVANT MONITORING DATA	4
ATTACHMENT "D" – TREATMENT BMP LOCATION MAP	5
ATTACHMENT "E" – TREATMENT BMP DATASHEET	6
ATTACHMENT "F" – O&M PROGRAM FOR TREATMENT BMP	7
ATTACHMENT "G" – CERTIFICATION SHEET	8

1

Storm Water Management Plan
For Priority Projects
(Major SWMP)

Project Name:	MONTECITO RANCH
Permit Number (Land Development Projects):	TM 5250 RPL4
Work Authorization Number (CIP):	
Applicant:	MONTECITO RANCH, LLC
Applicant's Address:	402 WEST BROADWAY, SUITE 2175 SAN DIEGO, CA 92101-3542
Plan Prepare By (*Leave blank if same as applicant*):	STEVENS CRESTO ENGINEERING, INC. 9665 CHESAPEAKE DR. #320 SAN DIEGO, CA 92123
Date:	09/07/06
Revision Date (If applicable):	01/15/08

The County of San Diego Watershed Protection, Storm Water Management, and Discharge Control Ordinance (WPO) (Ordinance No. 9424) requires all applications for a permit or approval associated with a Land Disturbance Activity must be accompanied by a Storm Water Management Plan (SWMP) (section 67.804.f). The purpose of the SWMP is to describe how the project will minimize the short and long-term impacts on receiving water quality. Projects that meet the criteria for a priority project are required to prepare a Major SWMP.

Since the SWMP is a living document, revisions may be necessary during various stages of approval by the County. Please provide the approval information requested below.

Project Review Stage	Does the SWMP need revisions?		If YES, Provide Revision Date
	YES	NO	

Instructions for a Major SWMP can be downloaded at http://www.co.san-diego.ca.us/dpw/stormwater/susmp.html.

Completion of the following checklist and attachments will fulfill the requirements of a Major SWMP for the project listed above.

PROJECT DESCRIPTION

The proposed Montecito Ranch subdivision is a rural residential community consisting of 417 single-family residential lots in the community of Ramona, County of San Diego, California (proposed Tract 5250). The project is bound by the Rancho Santa Maria line to the north-west, Highway 78 to the north, and the project is generally west of Pine Street and north of Cedar Street. The project contains **935 acres** and is generally a portion of Sections 5,7,8,9, and 17, Township 13 South, Range 1 East. Immediate surrounding land uses consist of semi-rural and estate residential development to the north, east, and south, and the Lemurian Fellowship religious facility and orchards to the northwest. The Ramona Airport lies approximately 0.5 mile south of the project site. The proposed subdivision will contain 434 lots: 417 single-family residential lots (20,000 square-foot minimum in size), a school site, 13 lots which include uses for open space and drainage and infrastructure requirements, a park, a historic park site, and a wastewater facility. Park and school permanent post-construction BMPs shall be required and are to be determined by proposed developments/ developers at the building permit stage. The project will be developed in two map units.

The rural type lots have a developed foot print which minimizes disturbance to the natural environment, as well as minimizing the impervious surface area, by consolidating graded areas and building areas at the extreme front of each lot adjacent to the public street. Public access to open space will be provided through the incorporation of trail systems. Horses will be allowed within Lots 1 through 30 in the eastern portion of the site and equestrian facilities will be provided in the southern portion of the historic park site.

Table A Land Use by Planning Area

Table A summarizes land use by unit on an acreage basis. Off-site improvements conditioned to this tentative map occur within existing public right-of way.

PLANNING AREA	NO. OF LOTS	NO. OF RESIDENTIAL LOTS	RESIDENTIAL DEVELOPMENT AREA[1] (AC)	STREET DEDICATION[2] (AC)	HOA LOTS[5] (AC)	DEDICATED OPEN SPACE[4] (AC)	PARK SITE[1] (AC)	CHARTER SCHOOL SITE [1] (AC)	HISTORICAL PARK SITE [1] (AC)	WASTEWATER FACILITY	TRAILS (INSIDE ROADWAY) (LF)
UNIT 1	249.00	243.00	142.1	21.5	6.4	–	–	–	–	–	–
UNIT 2	185.00	174.00	108.1	17.7	5.7	–	–	–	–	–	–
WITHIN PROJ. BDRY. [2]				23.6	–	554.0	8.3	10.6	11.9	25.4	11243.5
TOTAL	434.00	417.00	250.2	62.7	12.1	554.0	8.3	10.6	11.9	25.4	11243.5
PERCENT IMPERVIOUS [3]			20%	95%	0%	N/A	10%	80%	NO CHANGE	2%	
PERCENT OF SITE CONVERTED TO IMPERVIOUS SURFACES			5.4%	6.4%	0.0%		0.0%	0.0%		0.0%	

NOTES:

[1] INCLUDES BRUSH MANAGEMENT AREA (29.52 AC. IN UNIT 1, 29.38 AC. IN UNIT 2, & 10.16 AC. WITHIN PROJ. BDRY., TOTAL = 69.08 AC.); DOES NOT INCLUDE PRIVATE ROAD EASEMENTS

[2] INCLUDES ROADWAY DEDICATIONS WITHIN LOTS 429 & 430 AND MONTECITO RANCH ROAD WITHIN THIS ROW, TO BE CONSTRUCTED INDEPENDENTLY OF UNIT 1 AND UNIT 2

[3] PERCENT IMPERVIOUS BASE UPON, "SAN DIEGO COUNTY HYDROLOGY MANUAL, DPW FLOOD CONTROL SECTION: JUNE 2003"

[4] INCLUDES TRAILS PASSING THROUGH OPEN SPACE

[5] INCLUDES PRIVATE ROAD EASEMENTS WITHIN RESIDENTIAL DEVELOPMENT

[6] INCLUDES HOA MAINTENANCE LOTS, LOTS 79 & 322 USED FOR PRIVATE DETENTION BASINS, AND LOT 294 USED FOR A PUBLIC SEWER PUMP STATION

PRIORITY PROJECT DETERMINATION

Please check the box that best describes the project. Does the project meet one of the following criteria?

PRIORITY PROJECT	YES	NO
Redevelopment within the County Urban Area that creates or adds at least 5,000 net square feet of additional impervious surface area		X
Residential development of more than 10 units	X	
Commercial developments with a land area for development of greater than 100,000 square feet		X
Automotive repair shops		X
Restaurants, where the land area for development is greater than 5.000 square feet		X
Hillside development, in an area with known erosive soil conditions, where there will be grading on any natural slope that is twenty-five percent or greater, if the development creates 5,000 square feet or more of impervious surface		X
Environmentally Sensitive Areas: All development and redevelopment located within or directly adjacent to or discharging directly to an environmentally sensitive area (where discharges from the development or redevelopment will enter receiving waters within the environmentally sensitive area), which either creates 2,500 square feet of impervious surface on a proposed project site or increases the area of imperviousness of a proposed project site to 10% or more of its naturally occurring condition.		X
Parking Lots 5,000 square feet or more or with 15 parking spaces or more and potentially exposed to urban runoff	X	
Streets, roads, highways, and freeways which would create a new paved surface that is 5,000 square feet or greater	X	

Limited Exclusion: Trenching and resurfacing work associated with utility projects are not considered priority projects. Parking lots, buildings and other structures associated with utility projects are subject to SUSMP requirements if one or more of the criteria above are met.

If you answered **NO** to all the questions, then **STOP**. Please complete a Minor SWMP for your project.

If you answered **YES** to any of the questions, please continue.

The following questions provide a guide to collecting information relevant to project stormwater quality issues. Please provide a description of the findings in text box below.

	QUESTIONS	COMPLETED	NA
1.	Describe the topography of the project area.	X	
2.	Describe the local land use within the project area and adjacent areas.	X	
3.	Evaluate the presence of dry weather flow.	X	

	QUESTIONS	COMPLETED	NA
4.	Determine the receiving waters that may be affected by the project throughout the project life cycle (i.e., construction, maintenance and operation).	X	
5.	For the project limits, list the 303(d) impaired receiving water bodies and their constituents of concern.	X	
6.	Determine if there are any High Risk Areas (municipal or domestic water supply reservoirs or groundwater percolation facilities) within the project limits.	X	
7.	Determine the Regional Board special requirements, including TMDLs, effluent limits, etc.	X	
8.	Determine the general climate of the project area. Identify annual rainfall and rainfall intensity curves.	X	
9.	If considering Treatment BMPs, determine the soil classification, permeability, erodibility, and depth to groundwater.	X	
10.	Determine contaminated or hazardous soils within the project area.	X	

Please provide a description of the findings in the following box:

Topography and Land Use

The project area is composed of a variety of topographic features including relatively steep slopes, rolling hills and relatively flat plains. The northern and eastern portions of the site generally slope to the north and east and are comprised of rolling hills with some relatively steep slopes and natural drainages that drain to Clevenger Canyon and Santa Ysabel Creek, a tributary of the San Dieguito River. The southern and western portions of the site are comprised of rolling hills to flat plain areas and generally slope to the south. This area drains to Santa Maria Creek, also a tributary of the San Dieguito River.

The property has historically been used for agricultural purposes. Approximately 250 to 300 acres of the site have been disturbed for farming. Previous agricultural use is an oat hay crop that failed due to the ongoing drought. An existing unoccupied ranch house is the only dwelling on-site and will be preserved with the proposed Montecito Historical Park. Other existing site features include rock outcroppings, isolated areas of "steep" slopes and various biological features subject to RPO are located on the site.

Dry Weather Flows

The presence of dry weather flows at the project site will be kept to a minimum. Source Control BMPs will be used to the Maximum Extent Practicable (MEP) in order to prevent polluted runoff.

Hydrologic Area Contribution

Montecito Ranch is located in the San Dieguito Watershed. This Watershed is tributary to the San Dieguito River. The northeast 56 percent of the site is contained in hydrologic area Santa Ysabel (905.5), hydrologic sub-area Boden (905.51), and the remaining southwest 44 percent is contained in hydrologic area Santa Maria Valley (905.4), hydrologic sub-area Ramona (905.41). The north and east portion of the existing site drains northerly through Clevenger Canyon and is Tributary to Santa Ysabel Creek. The south and west portion of the site drains south to Santa

Maria Creek. Storm runoff captured by numerous storm drain systems for this project will discharge, after treatment (to the Maximum Extent Practicable (MEP) to be detailed by this report), to the above described creeks in the above percentages. Site runoff within hydrologic areas 905.41 and 905.51 are conveyed northwest via Santa Maria Creek and Santa Ysabel Creek respectively. Ultimately these creeks, and others, confluence in the San Pasqual Valley and flow southwest to Lake Hodges. Downstream of Lake Hodges, the San Dieguito River course discharges flow to the Pacific Ocean at Del Mar. Off-site storm runoff historically conveyed through the site will continue to pass through the project and not be detained or treated. The runoff velocities will be reduced to existing value to the MEP. Overall, the project area represents 0.4% of the watershed.

303(d) Status

According to the California Regional Water Quality Control Board, Water Control Plan for the San Diego Basin (9), the Pacific Ocean at the mouth of the San Dieguito River (San Dieguito Lagoon) is the outlet of the San Dieguito Watershed. Per the 2002 CWA 303(d) list, this outlet is an impaired water body for elevated bacteria indicators. The outlet point is approximately 25 miles west of the project. Lake Hodges is also listed as an impaired water body, for color, nitrogen, phosphorus and total dissolved solids. The lake is approximately 10 miles west of the project. Due to the distance of the project from the water bodies and the fact that bacteria impairment is mainly due to municipal sewer contamination as well as animal fecal contamination, and that the nitrogen, phosphorus and total dissolved solids in Lake Hodges are primarily from neighboring agricultural uses, the proposed Montecito Ranch Subdivision will not be a contributor to the specific impairments listed. In addition, the Montecito Ranch Subdivision comprises only approximately 0.4% of the San Dieguito Watershed.

The 303d list shows a low priority for developing a pollution control plan called a "Total Maximum Daily Load (TMDL)" for this Water Body (The TMDL serves as the means to attain and maintain water quality standards for the impaired water body).

High Risk Areas

There are no High-Risk Areas within the project limits.

Annual Rainfall and Rainfall Intensity Curves

Based on the County of San Diego Hydrology Manual, dated June 2003, the 6-hour and 24-hour rainfall amounts for the site, during a 100-year storm, are approximately 3.5 inches and 6.0 inches, respectively.

Soil Characteristics

Soil Type – Hydrologic Soil Group D is assumed for all areas. Group D soils have very slow infiltration rates when thoroughly wetted. Consisting primarily of clay soils with a high swelling potential, soils with a high permanent water table, soils with clay pan layer at or near the surface, and shallow soils over nearly impervious materials such as rock, Group D soils have a very slow rate of water transmission.

There appear to be no hazardous or contaminated soils within the project area.

Complete the checklist below to determine if Treatment Best Management Practices (BMPs) are required for the project.

No.	CRITERIA	YES	NO	INFORMATION
1.	Is this an emergency project		X	If YES, go to 6. If NO, continue to 2.
2.	Have TMDLs been established for surface waters within the project limit?		X	If YES, go to 5. If NO, continue to 3.
3.	Will the project directly discharge to a 303(d) impaired receiving water body?		X	If YES, go to 5. If NO, continue to 4.
4.	Is this project within the urban and environmentally sensitive areas as defined on the maps in Appendix B of the *County of San Diego Standard Urban Storm Water Mitigation Plan for Land Development and Public Improvement Projects*?	X		If YES, continue to 5. If NO, go to 6.
5.	Consider approved Treatment BMPs for the project.	X		If YES, go to 7.
6.	Project is not required to consider Treatment BMPs			Document for Project Files by referencing this checklist.
7.	End			

Now that the need for a treatment BMPs has been determined, other information is needed to complete the SWMP.

WATERSHED

Please check the watershed(s) for the project.

☐ San Juan ☐ Santa Margarita ☐ San Luis Rey ☐ Carlsbad
■ San Dieguito ☐ Penasquitos ☐ San Diego ☐ Pueblo San Diego
☐ Sweetwater ☐ Otay ☐ Tijuana

Please provide the hydrologic sub-area and number(s)

Number	Name
905.51	Boden
905.41	Ramona

Please provide the beneficial uses for Inland Surface Waters and Ground Waters. Beneficial Uses can be obtained from the Water Quality Control Plan For The San Diego Basin, which is available at the Regional Board office or at http://www.swrcb.ca.gov/rwqcb9/programs/basinplan.html.

BENEFICIAL USES OF INLAND SURFACE WATERS (Hydrologic Unit 905.5x)

Inland Surface Waters [1,2]	Hydrologic Unit Basin Number	BENEFICIAL USE														
		MUN	AGR	IND	PROC	GWR	FRSH	POW	REC1	REC2	BIOL	WARM	COLD	WILD	RARE	SPWN
Santa Ysabel Creek	5.51	●	●	●	●				●	●		●	●	●		
Clevenger Canyon	5.51	●	●	●	●				●	●		●	●	●		
Santa Maria Creek	5.41	●	●	●	●				●	●		●		●		
Santa Maria Creek	5.32	●	●	●	●				O	●		●		●		
Santa Ysabel Creek	5.32	●	●	●	●				O	●		●		●	●	

● Existing Beneficial Use
O Potential Beneficial Use
+ Excepted From MUN (See Text)

[1] Waterbodies are listed multiple times if they cross hydrologic area or sub area boundaries.
[2] Beneficial use designations apply to all tributaries to the indicated waterbody, if not listed separately.

BENEFICIAL USES OF RESERVOIRS & LAKES

Reservoirs & Lakes	Hydrologic Unit Basin Number	BENEFICIAL USE												
		MUN	AGR	IND	PROC	GWR	FRSH	REC1	REC2	WARM	COLD	WILD	RARE	POW
Lake Hodges	5.21	●	●	●	●			● [1]	●	●	●	●	●	

[1] Fishing from shore or boat permitted, but other water contact recreational (REC-1) uses are prohibited.
● Existing Beneficial Use
O Potenetial Beneficial Use

BENEFICIAL USES OF GROUND WATERS

Ground Water		Hydrologic Unit Basin Number	BENEFICIAL USE					
			MUN	AGR	IND	PROC	FRSH	GWR
Santa Maria Valley	HA	5.40						
Ramona	HSA	5.41	●	●	●	●		
Santa Ysabel	HA	5.50	●	●				

● Existing Beneficial Use
O Potential Beneficial Use

POLLUTANTS OF CONCERN

Using Table 1, identify pollutants that are anticipated to be generated from the proposed priority project categories. Pollutants associated with any hazardous material sites that have been remediated or are not threatened by the proposed project are not considered a pollutant of concern.

Table 1. Anticipated and Potential Pollutants Generated by Land Use Type

	General Pollutant Categories								
Priority Project Categories	Sediments	Nutrients	Heavy Metals	Organic Compounds	Trash & Debris	Oxygen Demanding Substances	Oil & Grease	Bacteria & Viruses	Pesticides
Detached Residential Development	X	X			X	X	X	X	X
Attached Residential Development	X	X			X	P(1)	P(2)	P	X
Commercial Development >100,000 ft^2	P(1)	P(1)		P(2)	X	P(5)	X	P(3)	P(5)
Automotive Repair Shops			X	X(4)(5)	X		X		
Restaurants					X	X	X	X	
Hillside Development >5,000 ft^2	X	X			X	X	X		X
Parking Lots	P(1)	P(1)	X		X	P(1)	X		P(1)
Streets, Highways & Freeways	X	P(1)	X	X(4)	X	P(5)	X		

X = anticipated
P = potential
(1) A potential pollutant if landscaping exists on-site.
(2) A potential pollutant if the project includes uncovered parking areas.
(3) A potential pollutant if land use involves food or animal waste products.
(4) Including petroleum hydrocarbons.
(5) Including solvents.

Note: If other monitoring data that is relevant to the project is available. Please include as Attachment C.

CONSTRUCTION BMPs

Please check the construction BMPs that may be used. The BMPs selected are those that will be implemented during construction of the project. The applicant is responsible for the placement and maintenance of the BMPs selected.

- Silt Fence
- Fiber Rolls
- Street Sweeping and Vacuuming
- Storm Drain Inlet Protection
- Stockpile Management
- Solid Waste Management
- Stabilized Construction Entrance/Exit
- Dewatering Operations
- Vehicle and Equipment Maintenance
- Desilting Basin
- Gravel Bag Berm
- Sandbag Barrier
- Material Delivery and Storage
- Spill Prevention and Control
- Concrete Waste Management
- Water Conservation Practices
- Paving and Grinding Operations
- Any minor slopes created incidental to construction and not subject to a major or minor grading permit shall be protected by covering with plastic or tarp prior to a rain event, and shall have vegetative cover reestablished within 180 days of completion of the slope and prior to final building approval.

SITE DESIGN

To minimize stormwater impacts, site design measures must be addressed. The following checklist provides options for avoiding or reducing potential impacts during project planning. If YES is checked, it is assumed that the measure was used for this project. If NO is checked, please provide a brief explanation why the option was not selected in the text box below.

	OPTIONS	YES	NO	N/A
1.	Can the project be relocated or realigned to avoid/reduce impacts to receiving waters or to increase the preservation of critical (or problematic) areas such as floodplains, steep slopes, wetlands, and areas with erosive or unstable soil conditions?	X		
2.	Can the project be designed to minimize impervious footprint?	X		
3.	Conserve natural areas where feasible?	X		
4.	Where landscape is proposed, can rooftops, impervious sidewalks, walkways, trails and patios be drained into adjacent landscaping?	X		
5.	For roadway projects, can structures and bridges be designed or located to reduce work in live streams and minimize construction impacts?	X		
6.	Can any of the following methods be utilized to minimize erosion from slopes:			
	6.a. Disturbing existing slopes only when necessary?	X		

	6.b.	Minimize cut and fill areas to reduce slope lengths?	X		
	6.c.	Incorporating retaining walls to reduce steepness of slopes or to shorten slopes?	X		
	6.d.	Providing benches or terraces on high cut and fill slopes to reduce concentration of flows?			X
	6.e.	Rounding and shaping slopes to reduce concentrated flow?	X		
	6.f.	Collecting concentrated flows in stabilized drains and channels?	X		

Please provide a brief explanation for each option that was checked N/A or NO in the following box.

6d) No significantly high slopes.

If the project includes work in channels, then complete the following checklist. Information shall be obtained from the project drainage report.

No.	CRITERIA	YES	NO	N/A	COMMENTS
1.	Will the project increase velocity or volume of downstream flow?			X	If YES go to 5.
2.	Will the project discharge to unlined channels?			X	If YES go to 5.
3.	Will the project increase potential sediment load of downstream flow?			X	If YES go to 5.
4.	Will the project encroach, cross, realign, or cause other hydraulic changes to a stream that may affect upstream and/or downstream channel stability?			X	If YES go to 7.
5.	Review channel lining materials and design for stream bank erosion.			X	Continue to 6.
6.	Consider channel erosion control measures within the project limits as well as downstream. Consider scour velocity.			X	Continue to 7.
7.	Include, where appropriate, energy dissipation devices at culverts.			X	Continue to 8.
8.	Ensure all transitions between culvert outlets/headwalls/wingwalls and channels are smooth to reduce turbulence and scour.			X	Continue to 9.
9.	Include, if appropriate, detention facilities to reduce peak discharges.			X	
10.	"Hardening" natural downstream areas to prevent erosion is not an acceptable technique for protecting channel slopes, unless pre-development conditions are determined to be so erosive that hardening would be required even in			X	Continue to 11.

No.	CRITERIA	YES	NO	N/A	COMMENTS
	the absence of the proposed development.				
11.	Provide other design principles that are comparable and equally effective.			X	Continue to 12.
12.	End				

SOURCE CONTROL

Please complete the following checklist for Source Control BMPs. If the BMP is not applicable for this project, then check N/A only at the main category.

BMP			YES	NO	N/A
1.	**Provide Storm Drain System Stenciling and Signage**				
	1.a.	All storm drain inlets and catch basins within the project area shall have a stencil or tile placed with prohibitive language (such as: "NO DUMPING – DRAINS TO THE PACIFIC OCEAN") and/or graphical icons to discourage illegal dumping.	X		
	1.b.	Signs and prohibitive language and/or graphical icons, which prohibit illegal dumping, must be posted at public access points along channels and creeks within the project area.	X		
2.	**Design Outdoors Material Storage Areas to Reduce Pollution Introduction**				
	2.a.	This is a detached single-family residential project. Therefore, personal storage areas are exempt from this requirement.	X		
	2.b.	Hazardous materials with the potential to contaminate urban runoff shall either be: (1) placed in an enclosure such as, but not limited to, a cabinet, shed, or similar structure that prevents contact with runoff or spillage to the storm water conveyance system; or (2) protected by secondary containment structures such as berms, dikes, or curbs.			
	2.c.	The storage area shall be paved and sufficiently impervious to contain leaks and spills.			
	2.d.	The storage area shall have a roof or awning to minimize direct precipitation within the secondary containment area.			
3.	**Design Trash Storage Areas to Reduce Pollution Introduction**				
	3.a.	Paved with an impervious surface, designed not to allow run-on from adjoining areas, screened or walled to prevent off-site transport of trash; or,	X		
	3.b.	Provide attached lids on all trash containers that exclude rain, or roof or awning to minimize direct precipitation.	X		
4.	**Use Efficient Irrigation Systems & Landscape Design**				
	The following methods to reduce excessive irrigation runoff shall be considered, and incorporated and implemented where determined applicable and feasible.				
	4.a.	Employing rain shutoff devices to prevent irrigation after precipitation.	X		
	4.b.	Designing irrigation systems to each landscape area's specific water requirements.	X		
	4.c.	Using flow reducers or shutoff valves triggered by a pressure drop to control water loss in the event of broken sprinkler heads or lines.	X		

		BMP	YES	NO	N/A
	4.d.	Employing other comparable, equally effective, methods to reduce irrigation water runoff.		X	
5.	**Private Roads**				
	The design of private roadway drainage shall use at least one of the following				
	5.a.	Rural swale system: street sheet flows to vegetated swale or gravel shoulder, curbs at street corners, culverts under driveways and street crossings.		X	
	5.b.	Urban curb/swale system: street slopes to curb, periodic swale inlets drain to vegetated swale/biofilter.		X	
	5.c.	Dual drainage system: First flush captured in street catch basins and discharged to adjacent vegetated swale or gravel shoulder, high flows connect directly to storm water conveyance system.		X	
	5.d.	Other methods that are comparable and equally effective within the project.	X		
6.	**Residential Driveways & Guest Parking**				
	The design of driveways and private residential parking areas shall use one at least of the following features.				
	6.a.	Design driveways with shared access, flared (single lane at street) or wheelstrips (paving only under tires); or, drain into landscaping prior to discharging to the storm water conveyance system.		X	
	6.b.	Uncovered temporary or guest parking on private residential lots may be: paved with a permeable surface; or, designed to drain into landscaping prior to discharging to the storm water conveyance system.		X	
	6.c.	Other features which are comparable and equally effective.	X		
7.	**Dock Areas**				X
	Loading/unloading dock areas shall include the following.				
	7.a.	Cover loading dock areas, or design drainage to preclude urban run-on and runoff.			
	7.b.	Direct connections to storm drains from depressed loading docks (truck wells) are prohibited.			
	7.c.	Other features which are comparable and equally effective.			
8.	**Maintenance Bays**				X
	Maintenance bays shall include the following.				
	8.a.	Repair/maintenance bays shall be indoors; or, designed to preclude urban run-on and runoff.			
	8.b.	Design a repair/maintenance bay drainage system to capture all wash water, leaks and spills. Connect drains to a sump for collection and disposal. Direct connection of the repair/maintenance bays to the storm drain system is prohibited. If required by local jurisdiction, obtain an Industrial Waste Discharge Permit.			
	8.c.	Other features which are comparable and equally effective.			
9.	**Vehicle Wash Areas**				X
	Priority projects that include areas for washing/steam cleaning of vehicles shall use the following.				
	9.a.	Self-contained; or covered with a roof or overhang.			
	9.b.	Equipped with a clarifier or other pretreatment facility.			
	9.c.	Properly connected to a sanitary sewer.			
	9.d.	Other features which are comparable and equally effective.			
10.	**Outdoor Processing Areas**				X

		BMP	YES	NO	N/A
	Outdoor process equipment operations, such as rock grinding or crushing, painting or coating, grinding or sanding, degreasing or parts cleaning, waste piles, and wastewater and solid waste treatment and disposal, and other operations determined to be a potential threat to water quality by the County shall adhere to the following requirements.				
	10.a.	Cover or enclose areas that would be the most significant source of pollutants; or, slope the area toward a dead-end sump; or, discharge to the sanitary sewer system following appropriate treatment in accordance with conditions established by the applicable sewer agency.			
	10.b.	Grade or berm area to prevent run-on from surrounding areas.			
	10.c.	Installation of storm drains in areas of equipment repair is prohibited.			
	10.d.	Other features which are comparable or equally effective.			
11.	**Equipment Wash Areas**				X
	Outdoor equipment/accessory washing and steam cleaning activities shall be.				
	11.a.	Be self-contained; or covered with a roof or overhang.			
	11.b.	Be equipped with a clarifier, grease trap or other pretreatment facility, as appropriate			
	11.c.	Be properly connected to a sanitary sewer.			
	11.d.	Other features which are comparable or equally effective.			
12.	**Parking Areas**				
	The following design concepts shall be considered, and incorporated and implemented where determined applicable and feasible by the County.				
	12.a.	Where landscaping is proposed in parking areas, incorporate landscape areas into the drainage design.	X		
	12.b.	Overflow parking (parking stalls provided in excess of the County's minimum parking requirements) may be constructed with permeable paving.			X
	12.c.	Other design concepts that are comparable and equally effective.	X		
13.	**Fueling Area**				X
	Non-retail fuel dispensing areas shall contain the following.				
	13.a.	Overhanging roof structure or canopy. The cover's minimum dimensions must be equal to or greater than the area within the grade break. The cover must not drain onto the fuel dispensing area and the downspouts must be routed to prevent drainage across the fueling area. The fueling area shall drain to the project's treatment control BMP(s) prior to discharging to the storm water conveyance system.			
	13.b.	Paved with Portland cement concrete (or equivalent smooth impervious surface). The use of asphalt concrete shall be prohibited.			
	13.c.	Have an appropriate slope to prevent ponding, and must be separated from the rest of the site by a grade break that prevents run-on of urban runoff.			
	13.d.	At a minimum, the concrete fuel dispensing area must extend 6.5 feet (2.0 meters) from the corner of each fuel dispenser, or the length at which the hose and nozzle assembly may be operated plus 1 foot (0.3 meter), whichever is less.			

Please list other project specific Source Control BMPs in the following box. Write **N/A** if there are none and briefly explain.

The project is designed to minimize the use of impervious areas. Approximately 13.4% of the project area will be impervious. Streets have been designed to meet the minimum widths. Landscaping of the slopes and common areas are incorporated into the plans. The landscaping will consist of both native and non-native plants. The goal is to achieve plant establishment expeditiously to reduce erosion. The irrigation system for these landscaped areas will be monitored to reduce over irrigation. Also, riprap type energy dissipaters will be placed at storm drain outfalls to reduce velocities.

For the residential portions of the development, BMPs will be integrated into site design in the form of reduced impervious footprint of single family lots and residential lawn filtering flows from each lot. BMPs will be implemented in the form of biofiltration swales routing flows on-lot prior to entering the private storm drain system.

TREATMENT CONTROL

To select a structural treatment BMP using Treatment Control BMP Selection Matrix (Table 2), each priority project shall compare the list of pollutants for which the downstream receiving waters are impaired (if any), with the pollutants anticipated to be generated by the project (as identified in Table 1). Any pollutants identified by Table 1, which are also causing a Clean Water Act Section 303(d) impairment of the receiving waters of the project, shall be considered primary pollutants of concern. Priority projects that are anticipated to generate a primary pollutant of concern shall select a single or combination of stormwater BMPs from Table 2, which **maximizes pollutant removal** for the particular primary pollutant(s) of concern.

Priority projects that are **not** anticipated to generate a pollutant for which the receiving water is Clean Water Act Section 303(d) impaired shall select a single or combination of stormwater BMPs from Table 2, which are effective for pollutant removal of the identified secondary pollutants of concern, consistent with the "maximum extent practicable" standard.

Table 2. Treatment Control BMP Selection Matrix

Pollutant of Concern	*Treatment Control BMP Categories*						
	Biofilters	Detention Basins	Infiltration Basins(2)	Wet Ponds or Wetlands	Drainage Inserts	Filtration	Hydrodynamic Separator Systems(3)
Sediment	M	H	H	H	L	H	M
Nutrients	L	M	M	M	L	M	L
Heavy Metals	M	M	M	H	L	H	L
Organic Compounds	U	U	U	M	L	M	L
Trash & Debris	L	H	U	H	M	H	M
Oxygen Demanding Substances	L	M	M	M	L	M	L
Bacteria	U	U	H	H	L	M	L
Oil & Grease	M	M	U	U	L	H	L
Pesticides	U	U	U	L	L	U	L

Pollutant of Concern	*Treatment Control BMP Categories*						
	Biofilters	Detention Basins	Infiltration Basins(2)	Wet Ponds or Wetlands	Drainage Inserts	Filtration	Hydrodynamic Separator Systems(3)

(1) Copermittees are encouraged to periodically assess the performance characteristics of many of these BMPs to update this table.
(2) Including trenches and porous pavement.
(3) Also known as hydrodynamic devices and baffle boxes.

L: Low removal efficiency:
M: Medium removal efficiency:
H: High removal efficiency:
U: Unknown removal efficiency

Sources: *Guidance Specifying Management Measures for Sources of Nonpoint Pollution in Coastal Waters* (1993), *National Stormwater Best Management Practices Database* (2001), *Guide for BMP Selection in Urban Developed Areas* (2001), *and Caltrans New Technology Report (2001).*

A Treatment BMP must address runoff from developed areas. Please provide the post-construction water quality values for the project. Label outfalls on the BMP map. Q_{WQ} is dependent on the type of treatment BMP selected for the project.

Outfall	**Tributary Area (acres)**	**Q_{100} (cfs)**	**Q_{WQ} (cfs)**
			*

*NOTE: Treatment BMPs identified on Attachment D-1 have manufacturer's treatment flow rate capacities in excess of the anticipated flow rates received by each device during an 85th percentile storm. Initial sizing calculations are provided in Attachment E and final calculations shall be provided at the final engineering stage.

Please check the box(s) that best describes the Treatment BMP(s) selected for this project.

Biofilters
■ Grass swale
□ Grass strip
□ Wetland vegetation swale
□ Bioretention

Detention Basins
■ Extended/dry detention basin with grass lining
□ Extended/dry detention basin with impervious lining

Infiltration Basins
□ Infiltration basin
□ Infiltration trench
□ Porous asphalt
□ Porous concrete

☐ Porous modular concrete block

Wet Ponds or Wetlands

☐ Wet pond/basin (permanent pool)

☐ Constructed wetland

Drainage Inserts (See note below)

☐ Oil/Water separator

☐ Catch basin insert

■ Storm drain inserts (BIOCLEAN Inserts – Private Roads Only)

☐ Catch basin screens

Filtration

■ Media filtration (CLEARWATER Inserts – Public Roads Only)

☐ Sand filtration

Hydrodynamic Separator Systems

■ Swirl Concentrator

☐ Cyclone Separator

☐ Baffle Separator

☐ Gross Solids Removal Device

☐ Linear Radial Device

Include Treatment Datasheet as Attachment E. The datasheet should include the following:	**COMPLETED**	**NO**
1. Description of how treatment BMP was designed. Provide a description for each type of treatment BMP.	X	
2. Engineering calculations for the BMP(s)	X	

Please describe why the selected treatment BMP(s) was selected for this project. For projects utilizing a low performing BMP, please provide a detailed explanation and justification.

The following treatment control BMPs will be implemented to address water quality:

A. Detention Basins (DB)

B. Curb Inlet Filtration (CLEARWATER – Public Roads Only)

C. Curb Inlet Inserts (BIO-CLEAN – Private Roads Only)

D. Hydrodynamic Separator (VORTSENTRY)

E. Bio-Filters

The storm water treatment systems proposed for the project were chosen using a comprehensive cost effective approach, making use of current Best Available Technology (BAT) and taking into account installation and long term maintenance costs. Curb inlet inserts were chosen to treat runoff from private streets due to their ease of maintenance, and their effectiveness at removing

pollutants, including hydrocarbons and oil. It was determined, however, that for storm drain systems receiving runoff from six or more curb inlets, a hydrodynamic separator is a more cost effective choice for treatment. By utilizing hydrodynamic separators, the total number of treatment units at the project can be minimized, thus simplifying maintenance events and reducing long term maintenance costs. For treatment of runoff from the public right-of-way, a curb inlet filtration device by Clearwater was chosen. Laboratory testing has shown this device to be highly effective at removing total suspended solids (TSS), oil and grease, and dissolved metals. It is also very easy to install and maintain. The County of San Diego has approved the Clearwater device as a filtration BMP that can be used for treatment within the public right-of-way.

For this report, specific manufacturer's products are specified. These selections may be substituted for equivalent systems, subject to approval of the County of San Diego, at Final Engineering; as cost/availability may make an alternate a better choice. See Attachment D, "Treatment BMP Location Map" for locations of all Treatment Control BMPs

Further discussion, calculations, and manufacturer's specifications are presented as Attachment "E".

MAINTENANCE

Please check the box that best describes the maintenance mechanism(s) for this project.

CATEGORY	SELECTED	
	YES	NO
First		X
Second	X	
Third	X	
Fourth	X	

Please briefly describe the long-term fiscal resources for the selected maintenance mechanism(s).

SECOND CATEGORY - Private Detention Basins (See Attachment D-1):

Mechanisms to Assure Maintenance:

1. BMP Maintenance Agreement with Easement and Covenant: An agreement will be entered into with the County, which will function three ways:

(a) It will commit the land to being used only for purposes of the BMP;

(b) It will include an agreement by the landowner, to maintain the facilities in accordance with the SMP (this obligation would be passed on to future purchasers or successors of the landowner, as a covenant); and

(c) It will include an easement giving the County the right to enter onto the land (and any necessary adjacent land needed for access) to maintain the BMPs.

This easement and covenant will be recorded on or prior to the Final Map.

Funding:
Developer would provide the County with security to substantiate the maintenance agreement, which would remain in place for an interim period of 5 years. The amount of the security would equal the estimated cost of 2 years of maintenance activities. The security can be a Cash Deposit, Letter of Credit or other form acceptable to the County.

THIRD CATEGORY - On-Site Hydrodynamic Separators, On-Site Curb Inlet Inserts, and Public Detention Basin (See Attachment D-1):

Mechanisms to Assure Maintenance:

1. Dedication of BMP to County: The developer would be required to dedicate the BMP (and the property on which it is located) to the County. This could be an immediate dedication, or for cases where the County would not want to assume responsibility for the facility for some time (e.g., until after construction is completed), then an IOD could be used instead.
2. County Maintenance Documentation: Where the County has assumed maintenance responsibility, internal County program documentation would memorialize the required maintenance.

Funding:
The primary funding mechanism will be a special assessment under the authority of the Flood Control District. The assessment will be collected with property tax. Because this primary funding mechanism will require substantial amount of time to establish and collect assessments, a developer fee will be needed to cover the initial maintenance period of 24 months.

FOURTH CATEGORY - Curb Inlet Filtration Devices in the Public ROW (See Attachment D-1):

Clearwater filtration devices treat runoff from public Montecito Ranch Road. The two proposed public roadways benefit the local community as a whole, not just the proposed subdivision, and as a result, the Clearwater BMPs installed in those right-of-ways will be classified in maintenance Category 4.

Mechanisms to Assure Maintenance:

1. Dedication of BMP to County: The developer would be required to dedicate the BMP (and the property on which it is located) to the County. This could be an immediate dedication, or for cases where the County would not want to assume responsibility for the facility for some time (e.g., until after construction is completed), then an IOD could be used instead.
2. County Maintenance Documentation: Internal County or Flood Control District maintenance program documentation would memorialize the required maintenance.

Funding:
A permanent source will be implemented; options include gas tax, TransNet, General Fund, or new special taxes or fees.

ATTACHMENTS

Please include the following attachments.

ATTACHMENT		COMPLETED	N/A
A	Project Location Map	X	
B	Site Map	X	
C	Relevant Monitoring Data	X	
D	Treatment BMP Location Map	X	
E	Treatment BMP Datasheets	X	
F	Operation and Maintenance Program for Treatment BMPs	X	
G	Engineer's Certification Sheet	X	

Note: Attachments A and B may be combined.

ATTACHMENT A

LOCATION MAP

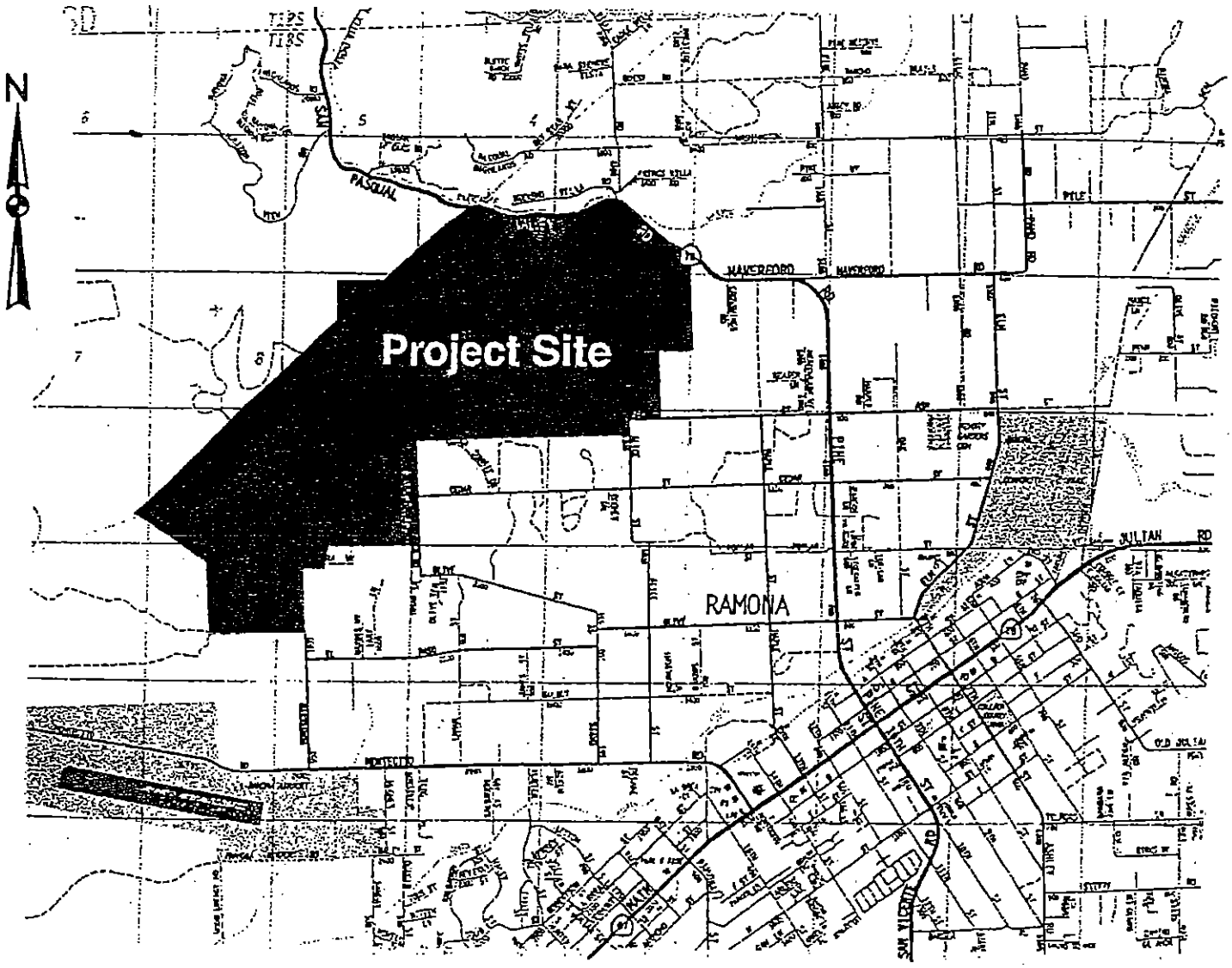

Vicinity Map

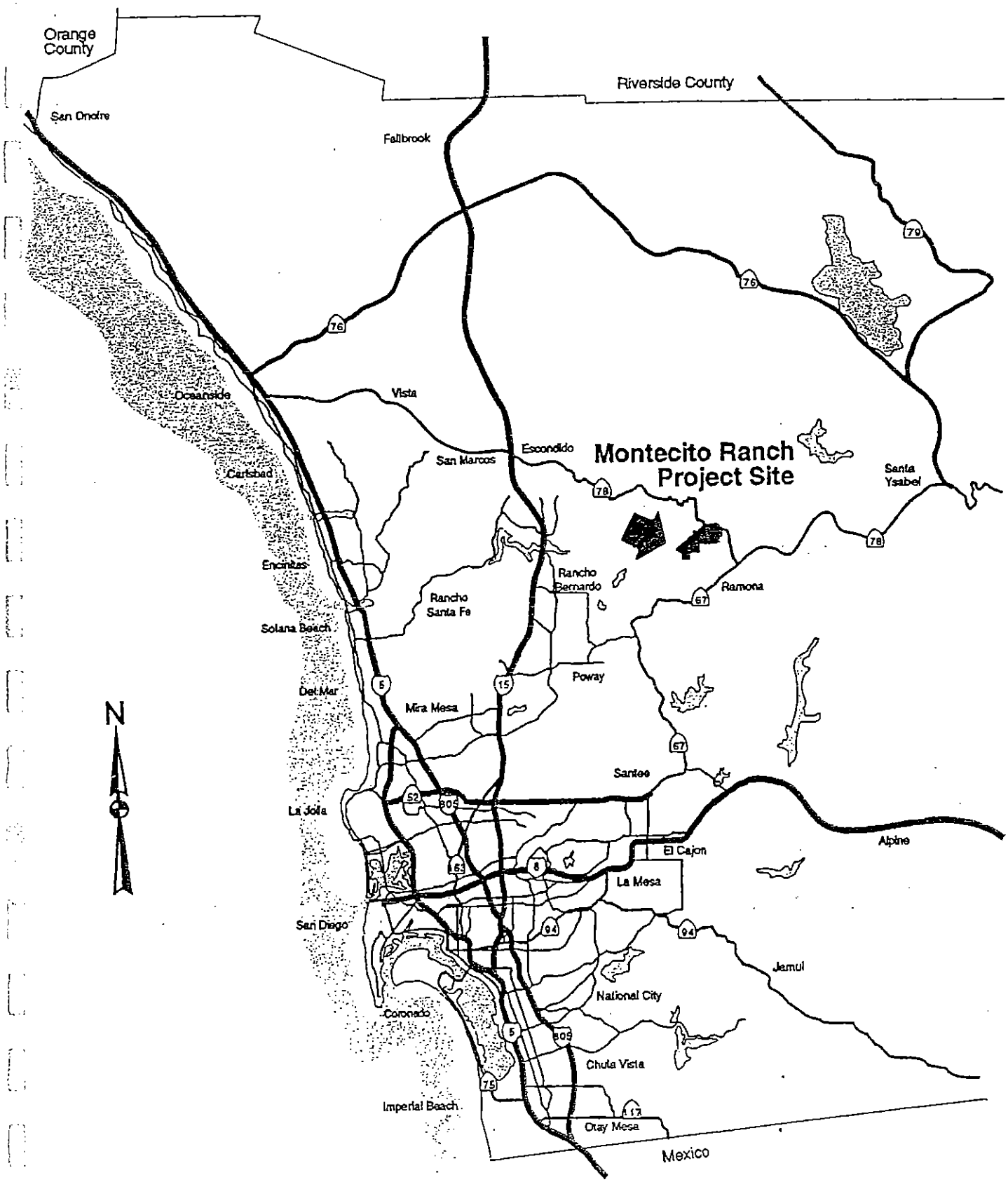

Regional Map

3

ATTACHMENT B

PROJECT SITE MAP

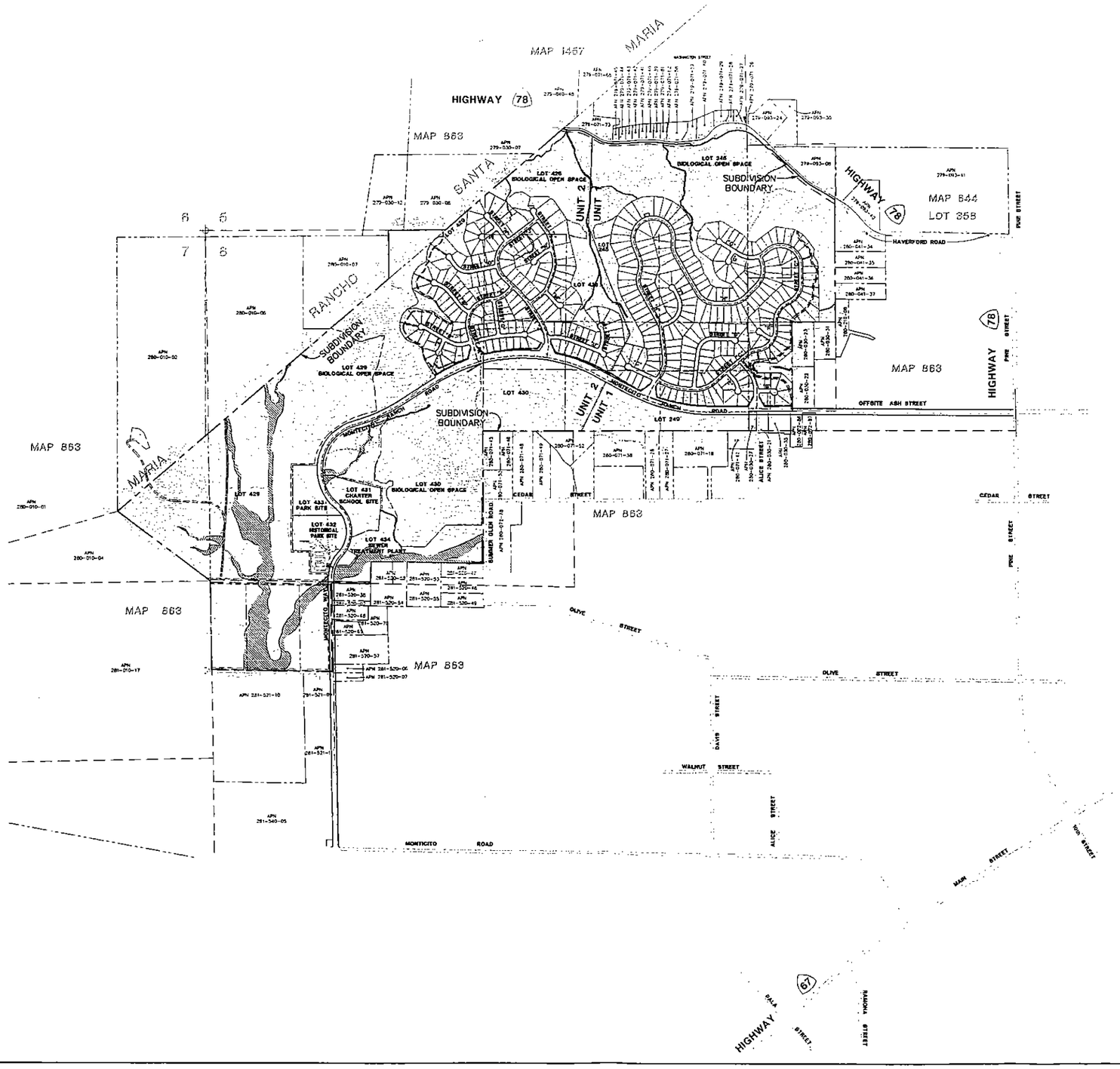

STEVENS-CRESTO ENGINEERING, INC.
CIVIL ENGINEERS · LAND PLANNERS · SURVEYORS
9220 CHESAPEAKE DRIVE
SUITE 101
SAN DIEGO, CA 92123-1324
PHONE: 619.694.5560
FAX: 619.694.5561
www.scengr.com

REVISIONS

MONTECITO RANCH

SAN DIEGO, CALIFORNIA

SITE MAP

4

ATTACHMENT C

RELEVANT MONITORING DATA

(NOTE: PROVIDE RELEVANT WATER QUALITY MONITORING DATA IF AVAILABLE.)

DATA NOT AVAILABLE

5

ATTACHMENT D

TREATMENT BMP LOCATION MAP

ATTACHMENT "D-1"
TREATMENT BMP LOCATION MAP

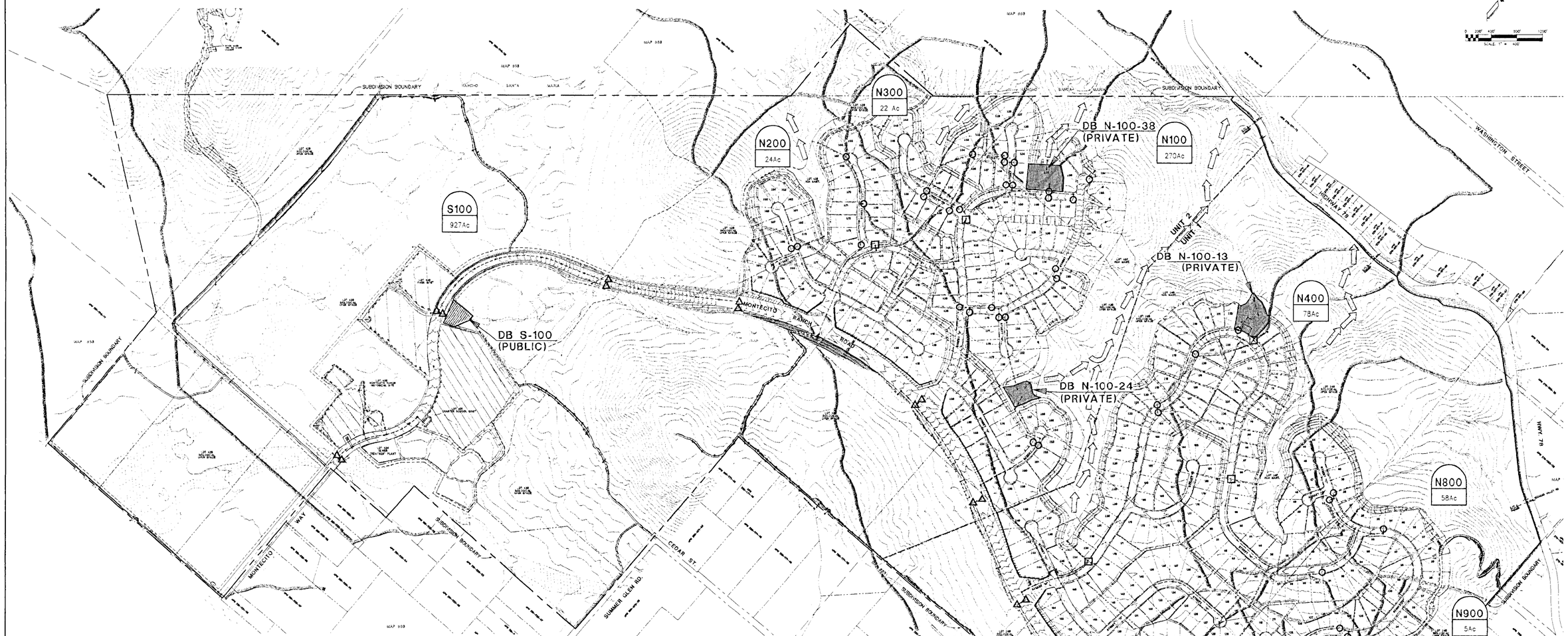

WATER QUALITY LEGEND:

Storm Drain Line — — —SD— — —

Bio Filtration (Naturally Vegetated Flow Paths) ⇨ ⇨ ⇨

Existing Drainage Basin Boundaries

Existing Drainage Basin Designation — S100 / 406Ac — INDICATES ACERAGE — INDICATES CONTRIBUTION TO SANTA ISABEL CREEK NORTH (N#) OR SANTA MARIA CREEK SOUTH (S#)

CATEGORY 2 BMP

Structural Treatment Private Detention Basins (DB) — DB (PRIVATE)

CATEGORY 3 BMPS

Structural Treatment (BIOCLEAN) ○

Structural Treatment Public Detention Basin (DB) — DB (PUBLIC)

Structural Treatment (VORTSENTRY) □

CATEGORY 4 BMP

Structural Treatment (CLEARWATER)** △

NOTE: ALL PROJECT DISCHARGE SHALL BE TREATED THROUGH THE BMP'S SHOWN AND DISCHARGE TO EXISTING NATURALLY VEGETATED FLOW PATHS, SERVING AS FURTHER BIO FILTRATION. FLOW RATES FROM PROPOSED DEVELOPMENT WILL BE ATENUATED AND BALANCED BY LIMITING OUTLET FLOW RATE IN AN EFFORT TO BALANCE OVERALL POST CONSTRUCTION RUNOFF FLOW RATES TO EXISTING LEVELS (TO THE MEP). REFER TO THE "PRELIMINARY DRAINAGE STUDY FOR: MONTECITO RANCH" AND THE "STORM WATER MANAGEMENT PLAN FOR MONTECITO RANCH TM 5250 RPL4" FOR FURTHER DETAILS AND DESIGN CALCULATIONS.

*PARKS/ SCHOOL'S POST CONSTRUCTION BMP'S SHALL BE REQUIRED AND ARE TO BE DETERMINED BY PROPOSED DEVELOPMENTS/ DEVELOPERS AT THE BUILDING PERMIT STAGE.

**CLEARWATER FILTRATION DEVICES TREAT RUNOFF FROM PUBLIC MONTECITO RANCH ROAD AND MONTECITO WAY. THE TWO PROPOSED PUBLIC ROADWAYS BENEFIT THE LOCAL COMMUNITY AS A WHOLE, NOT JUST THE PROPOSED SUBDIVISION, AND AS A RESULT, THE CLEARWATER BMPS INSTALLED IN THOSE RIGHT-OF-WAYS WILL BE CLASSIFIED IN MAINTENANCE CATEGORY 4.

STEVENS-CRESTO ENGINEERING, INC.
CIVIL ENGINEERS - PLANNERS - LAND SURVEYORS
9665 CHESAPEAKE DRIVE
SUITE 430
SAN DIEGO, CA 92123-1352
PHONE: 858.694.9660
FAX: 858.694.9661
www.scengr.com

MONTECITO RANCH TM 5250 RPL4

SAN DIEGO, CALIFORNIA

ATTACHMENT "D-1"
STORM WATER MANAGEMENT PLAN
TREATMENT BMP LOCATION MAP

DATE:	01/15/08
SCE NO.	02012.05
SHEET	D-1
	1 OF 1 SHEETS

X:\DWG\Job\2002\02012\Exhibits\2012CD_SWMP D1.dwg 1/15/2008 10:00:04 AM PST

6

ATTACHMENT E

TREATMENT BMP DATASHEET

(NOTE: POSSIBLE SOURCE FOR DATASHEETS CAN BE FOUND AT WWW.CABMPHANDBOOKS.COM. INCLUDE ENGINEERING CALCULATIONS FOR SIZING THE TREATMENT BMP.)

E-1A Detention Basins (DB)

Considering arid conditions in the region, it is not feasible to utilize Detention Basins/Wet Ponds for treatment of Water Quality concerns as well as peak flow regulation. As a result Detention Basins are implemented within Montecito Ranch to regulate peak flow only.

DB are impoundments where the runoff is temporarily detained under quiescent conditions, allowing sediment and particulates to settle out via, "...an outlet structure that will cause the runoff from most storms to pond in the basin. Following a storm these basins drain in about 24 to 72 hours and will be dry at all other times." A conceptual schematic of a detention basin is shown in Figure E-1. Detention devices remove litter from runoff and collect it for disposal; as well as, settable solids, and total suspended solids (TSS).

Specific design information for each detention basin is presented at the end of this section and within the Preliminary Drainage Study. Proposed flow rates are higher than the existing flow rate during the 100-year storm event. Proposed release rates from detention facilities have been arithmetically regulated (reduced) as necessary to meet exiting flow rates at each node. This provides a conservative approach, as the time of concentration of flows after leaving the detention facilities will be increased; further reducing the flow rate at the node points. As a check of preliminary detention volumes, the "Rational Method Hydrograph Program" by Rick Engineering Company, supplied by the County of San Diego, has been utilized to determine the inflow hydrograph utilizing parameters at the inlet of each detention facility. Utilizing this hydrograph in combination with the reduced release rate confirms the minimum storage capacity for each detention basin to be less than the volume of storage provided. The difference in the peak flow rate and control flow rate for each detention basin over the given time interval, (See flowing graphs in this section), is the minimum storage volume necessary to control the peak flow rate.

Appropriate Applications and Siting Constraints: Detention devices should be considered for implementation wherever site conditions allow. One important sighting requirement is that sufficient head is available so that water stored in the device does not cause a backwater condition in the storm drain system, which would limit its capacity. A second sighting requirement is that seasonally high groundwater is no higher than the bottom elevation of the device for reasons described below.

Factors Affecting Preliminary Design: Detention devices should be designed to hold at least the 24-hour water quality volume. The maximum water level in the detention device should not cause groundwater to occur under the roadway within 0.2 m (8 inches) of the roadway subgrade. A flow-path-to-width ratio of at least 2:1 is recommended. Baffles or interior berms to accommodate the geometry of the site can accomplish this ratio. See Section E-1B and Table E-2 of this report for Detention Volume calculations utilizing the Maximized Capture Urban Runoff Volume per ASCE Manual of Practice No. 87, (1998); as specified within the County of San Diego Stormwater Standards, current edition. Additional information regarding outlet flow rates and regulation of proposed outlet flow rates to existing flow rates is presented within the Preliminary Drainage Study for: "Montecito Ranch TM 5250 RPL4."

Liners are not generally required for detention basins. Infiltration is permissible if the infiltrated water does not surface in an undesirable place off-site or threaten the stability of a slope or embankment down gradient of the basin. To protect groundwater quality and to ensure dry

conditions for maintenance of unlined basins, the distance between the basin invert and seasonally high groundwater should be at least 2 m (6 ft). Where the groundwater is higher than this, the basin should be provided with an impermeable liner. In no case should the seasonally high groundwater be higher than the bottom elevation of the detention device to prevent uplift of tanks or liners.

Discharge should be accomplished through a water quality outlet. An example is shown in Figure E-2. A rock pile or rock-filled gabions can serve as alternatives to the debris screen. The water quality outlet should be designed to empty the device within 24 to 72 hours. (The 24-hour limit is chosen to provide adequate settling time; the 72-hour limit is chosen to minimize the potential for mosquito breeding.) Because detention basins are not maintained for infiltration, water loss by infiltration should be disregarded when designing the hydraulic capacity of the outlet structure.

Public health and vector control authorities should be consulted to verify the acceptability of detention basins and the maximum drawdown time allowed to avoid mosquito problems.

The inlet structure of the basin should be designed to divert the peak hydraulic flow (calculated according to County procedures for flood routing and scour) when the basin is full. Alternatively, an overflow structure sized according to these criteria can be provided in one of the downstream walls or berms. A third alternative is to include a flood control outlet in the top of the water quality outlet. In this case, an additional outlet (riser or spillway) should be supplied to prevent overtopping of the walls or berms. Entering flows should be distributed uniformly at low velocity to prevent re-suspension of settled materials and to encourage quiescent conditions.

The site must have sufficient area for a perimeter maintenance road and safe access to and from the site from local roads. Basin side slopes must be shallow enough to permit tracked vehicles to access the basin bottom for maintenance. Alternatively, an access ramp should be provided. Preliminary design factors for detention basins are summarized in Table E-1

Plan View

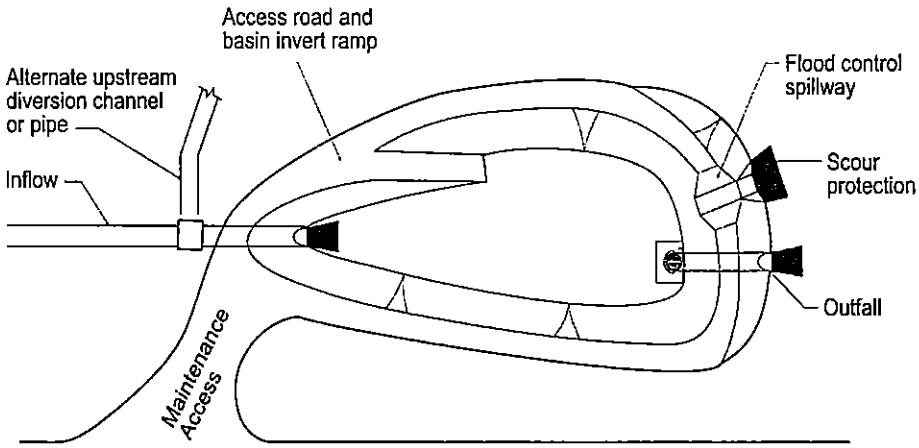

Cross Section

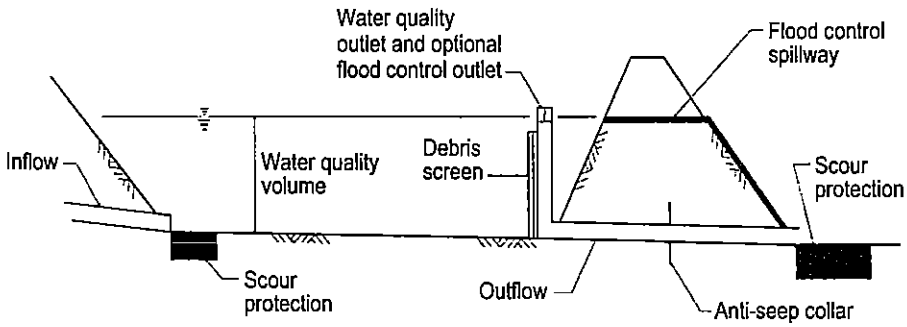

Figure E-1
Example of Detention Basin Schematic
(Not a Standard Plan)

Plan

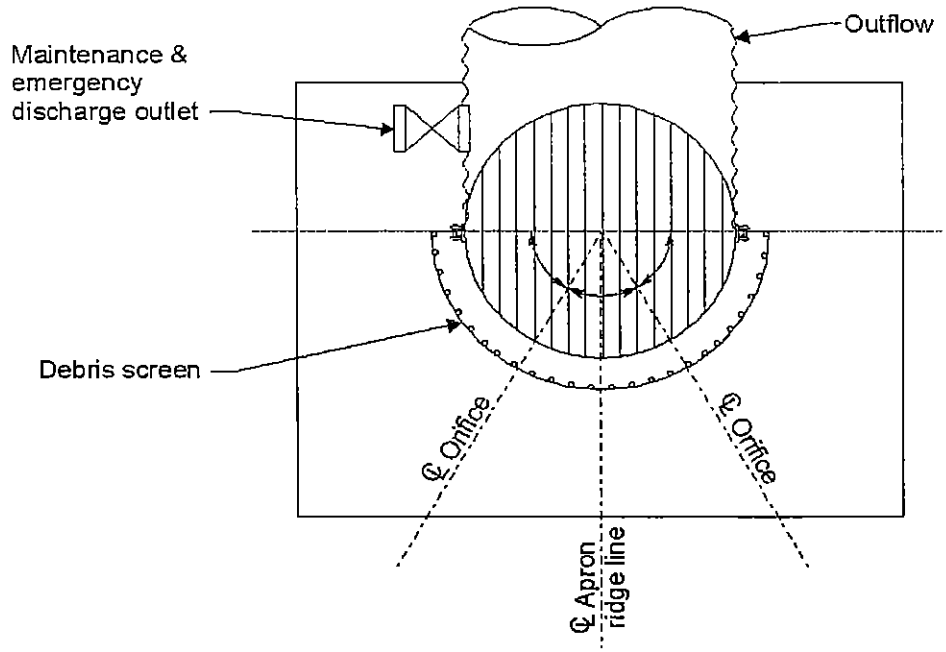

Profile

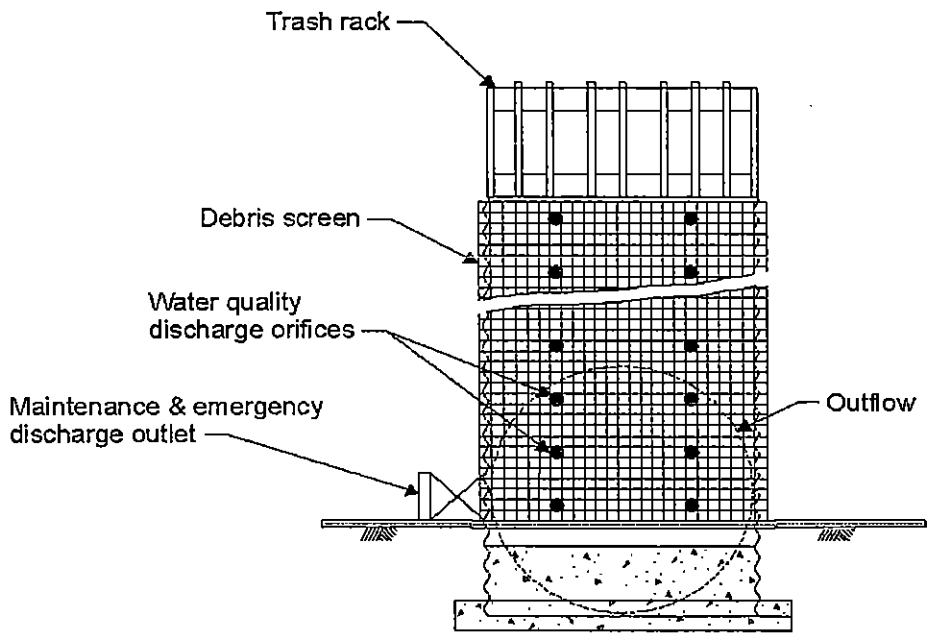

Figure E-2
Detention Basin Outlet Structure Schematic
(Not a Standard Plan)

Table E-1 Summary of Detention Basin Design Factors

Description	Applications/Siting	Preliminary Design Factors
Impoundments where the water quality volume is temporarily detained Treatment Mechanisms: • Sedimentation • Infiltration (if basin unlined) Pollutants removed: • Sediment and particulates • Litter	• Sufficient head to prevent backwater condition in the storm drain system • Seasonally high groundwater below basin invert • Consult public health and vector control authorities	• Size to capture the 24-hr water quality volume • Flow-path-to-width ratio of at least 2:1 recommended • Maximum water level should not cause groundwater to occur under the roadway within 0.2 m of the roadway subgrade • Basin invert ≥ 2 m above seasonally high groundwater or else a impermeable liner is required • Scour protection on inflow, outfall and spillway • Maintenance access (road around basin and ramp to basin invert) • Upstream diversion channel or pipe, downstream overflow structure or flood control outlet • Discharge through a water quality outlet with debris screen (or equivalent) • Outlet design to empty basin within 24 to 72 hrs • Flows should enter at low velocity

E-1B Project Specific Detention Basins Analysis

Development will increase peak discharge during the 100-year storm event within Basins S100, N100, and N600/700. Resultantly, these regional basins contain detention facilities to limit runoff to existing levels.

Considering this project is in a preliminary stage, in support of the Tentative Map at a discressionary level, final detention calculations are not appropriate at this time. Resultantly, final detention basin routing will occur at final engineering, this study provides preliminary calculations for required detention based upon County criteria (see "CRITERIA" below). Detailed calculations, utilizing preliminary hydrograph routing, for each detention basin designed for the project are provided at the end of this section. The following section checks the detention

capacity for satisfaction of water quality objectives utilizing the ASCE maximum capture approach and compares the maximum capture volume to capacity provided by the project design.

Post-Construction Water Quality Flows (for Detention Basins)

The following calculations represent an application of the Maximized Capture Urban Runoff Volume (ASCE Manual of Practice No. 87, (1998); Per the County of San Diego Ordinance No. 9426 (W.S.). Computations for the maximized capture urban runoff volume utilize the local values from County of San Diego 85th percentile, six hour storm. Excerpts from the ASCE Manual of Practice No. 87 appear at the end of this section.

Item C below represents total project detention requirements. Attachment D contains the BMP Map which identifies detention basin locations. Calculations for each detention basin indicating provided detention volume are at the end of Attachment E. Detention basin calculations demonstrate the volume of storage provided is in excess of required volume; based upon the ASCE method (see Item C). All project discharge shall be treated through the BMPs treatment train shown on the BMP map. Once treated and detained runoff will be_discharged to existing naturally vegetated flow paths; serving as further bio filtration. Flow rates from proposed development will be attenuated and balanced by limiting outlet flows in an effort to balance overall post construction runoff flow rates to existing levels (to the MEP).

Table E-2 Post-Construction Water Quality Flows (for Detention Basins)

A. Imperviousness – Composite

Developed Pads	~	243.9 Ac	@	20% imp	(73.0%)	=	0.1461
Community Park	~	8.3 Ac	@	10% imp	(2.5%)	=	0.0025
Charter School	~	12.8 Ac	@	80% imp	(3.8%)	=	0.0307
Community Site	~	2.5 Ac	@	85% imp	(0.7%)	=	0.0064
Developed Roads	~	39.2 Ac on-site	@	95% imp	(11.7%)	=	0.1115
Montecito Ranch Road	=	27.2 Ac	@	90% imp	(8.1%)	=	0.0733

Disturbed Ground Sub Total 333.9 Ac

I=0.3705

B. Max. Capture Urban Runoff Volume (Total Site Requirement)

Refer to the ASCE manual at the end of this section for definitions of variables and equations.

1. $C = 0.858\,(0.3705)^3 - 0.78\,(0.3705)^2 + 0.774\,(0.3705) + 0.04$

   $C = 0.2633$

2. $P_o = (a \bullet c)P_6$ $\quad a = 1.582$ (24 hr drain time)

   $P_6 = 0.83$ in

   $P_o = (1.582)(0.2633)(0.83) = 0.3458$ in

3. $Vol = P_{o\,(in)} (0.0833 \frac{Ac \bullet Ft}{Ac \bullet In}) A$

$Vol = 0.3458 (0.0833)(333.9) = 9.62$ Ac - Ft

C. Total Project Detention Requirements

Vol = 9.62 Ac • Ft required

Vol = 18.6 Ac • Ft provided

Factor Of Safety (F.O.S.) = 1.9

CRITERIA: utilizing methodology presented within, "San Diego County Drainage Design Manual; May 2005" and "Stormwater Management in small watersheds – Detention Storage to Reduce Peak Flows dated: September 1993 & April 1996":

1. **LIMIT RUNOFF TO EXISTING LEVELS**
2. **GENERATE RATIONAL METHOD PEAK FLOW**
3. **GENERATE INFLOW HYDROGRAPH UTILIZING "RATHYDRO"**
4. **PRELIMINARY DETENTION BASIN ROUTING FOR CALCULATING STORAGE VOLUME REQUIRED AND VERIFICATION OF STORAGE VOLUME PROVIDED**

1. LIMIT RUNOFF TO EXISTING LEVELS: proposed release rates from detention facilities have been attenuated and balanced (reduced) by limiting outlet flows from detention basins, to balance overall post construction runoff flow rates, to existing levels; as necessary to meet exiting flow rates for each regional basin S100, N100, AND N600/700. Therefore, existing downstream drainage facilities will not see an increase in peak flow from the developed site.

2. GENERATE RATIONAL METHOD PEAK FLOW: (SEE CEQA PRELIMINARY HYDROLOGY/DRAINAGE STUDY MONTECITO RANCH, TM 5250 RPL4, COUNTY OF SAN DIEGO, DATED JUNE 30, 2006).

3. GENERATE INFLOW HYDROGRAPH UTILIZING "RATHYDRO": the "Rational Method Hydrograph Program" by Rick Engineering Company, supplied by the County of San Diego, has been utilized to determine the developed "inflow" hydrograph, utilizing parameters at the outfall points for each regional basin S100, N100, AND N600/700. The parameters for the inflow hydrograph are the Rational Method weighted runoff coefficient, time of concentration, peak flow, six hour precipitation and overall basin area; all calculated for the developed condition.

4. PRELIMINARY DETENTION BASIN ROUTING FOR CALCULATING STORAGE VOLUME REQUIRED: overall project detention requirements are determined following the methods outlined in the County design manuals referenced above; criteria. Overall detention storage is developed using "Single Hydrograph Procedures" outlined within, "Stormwater Management in small watersheds – Detention Storage to Reduce Peak Flows dated September 1993 & April 1996." Utilizing these methods for the Regional Basins, the inflow hydrograph (Item 3 above) is plotted against the outflow hydrograph and the area between the two hydrographs is

calculated; overall detention requirement. Release rate results will be on the shown on the Final Map to assure runoff will not exceed the existing levels. Runoff generated from open space areas (run-on) to the project will not be detained and will pass through the project in natural open channels; as is the existing condition.

E-2 Curb Inlet Filtration (CLEARWATER)

Clearwater Curb Inlet Filtration Units will be utilized to treat runoff from public right-of-ways. These units have been approved by the County of San Diego as an acceptable filtration BMP. The Clearwater units treat "first flush" (Q_{ff}) minor storms and allow bypass of the filter for large storm events. The Clearwater filtration system consists of three separate screens that filter out large debris and trash, three chambers that settle out suspended solids, a suspended adsorbent boom to remove oil and petroleum products in the first chamber, and a media filter as the final step in the treatment train, used to remove smaller particulates and dissolved metals. Laboratory testing has shown that the Clearwater units provide removal rates of 97% for total suspended solids (TSS), 86% for oil and grease, 81% for lead, and 83% for zinc. These units will remove pollutants to the MEP, prior to release to the natural bio-swales within open space areas. Refer to the end of this section for product specifications.

- Design Criteria: Clearwater units, identified on the BMP map within Attachment D, will treat runoff generated from drainage roadway basins.

a) Manufacture's Specifications for the Clearwater units show a filtration capacity of 0.46 cfs. See specification at the end of this section.

b) Based upon County of San Diego, Storm Water Standards, flow based BMPs are required to treat the first 0.2in/hr of runoff. Therefore, these units can treat flows from tributary areas up to 2.42 acres ($A = Q_{ff}/(I*C) = 0.46$ cfs/(0.2in/hr)(0.95) = 2.42 Acres). 18 Clearwater units will be utilized to treat runoff from approximately 24 acres of roadway basin, resulting in an average of 1.33 acres/unit. Therefore, Clearwater units have the ability to treat all roadway runoff with excess capacity.

c) Manufacture criteria are presented at the end of this section documenting removal levels and specific water control device information.

Appropriate Applications and Siting Constraints: There are no unique siting criteria. The Clearwater Curb Inlet Filtration units can be installed in any standard sized curb inlet.

Vector Control: As indicated in the attached manufacturer's information, vector control is not a problem with the Clearwater units. The unit has been designed to slowly drain out the bottom so no standing water remains after a storm event.

E-3 Curb Inlet Inserts (BIOCLEAN)

Curb inlet inserts: Inserts will be located within curb inlets where storm drain systems are not tributary to a hydrodynamic separator. These inserts will treat runoff generated from roadways prior to release into natural open space areas.

Inserts have historically proven to provide low levels of heavy metal removal. However, current Best Available Technology (BAT) in curb inlet inserts utilizing Bio-Clean's "California Curb Shelf Basket" with Bio-Sorb Oil Absorbing Polymers have been shown to have medium to high heavy metal removal rates (Chromium, Lead, Copper, Iron, Aluminum, Zinc, and Nickel) See Figure E-3 and E-4 below. See Figure E-5 for laboratory testing results of pollutant removal efficiencies.

Inserts treat "first flush" (Q_{ff}) minor storms and allow bypass of the filter for large storm events. Additionally, inserts remove hydrocarbons, oil, and petroleum products and assist in further removal of heavy metals which may escape non-structural good housekeeping practices, thus removing pollutants from on-site runoff prior to release into the Municipal Storm Drain to the MEP.

- Design Criteria: Catch basin inserts, identified on the BMP map within Attachment D will treat runoff generated from drainage roadway basins.

a) Manufacture's Specifications for the Curb Inlet Skimmer inserts show a minimum filtration capacity of 5.28 cfs for the fine screen at the bottom of the basket. See specification at the end of this section.

b) Based upon County of San Diego, Storm Water Standards, flow based BMPs are required to treat the first 0.2in/hr of runoff. Therefore these inserts can treat flows from tributary areas up to 27.8 acres (Q_{ff}= 5.28 cfs/(0.2in/hr)(0.95) = 27.8 Acres). The largest roadway basin served by filters is approximately 3 acres. Resultantly, identified curb inlets have the ability to treat all roadway runoff with excess capacity.

c) Manufacture criteria are presented at the end of this section.

Figure E-3 Example of Curb Inlet Basket

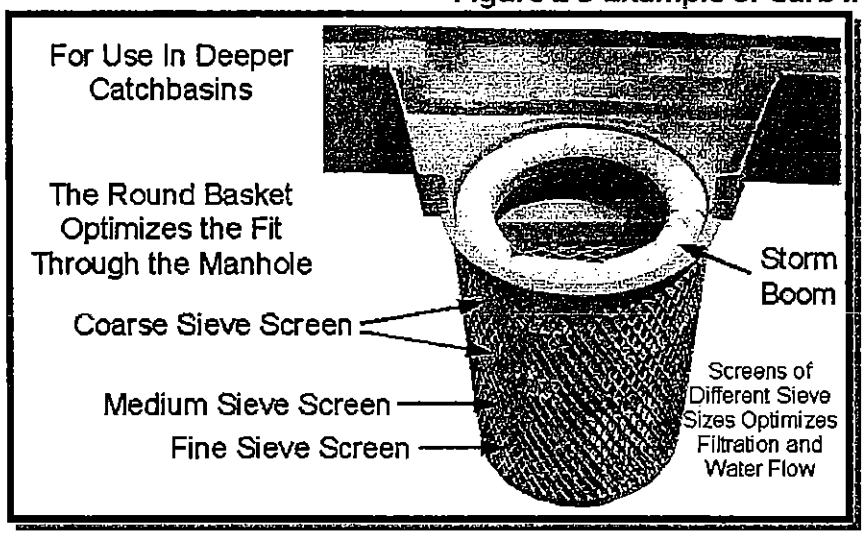

BIO CLEAN
ENVIRONMENTAL SERVICES, INC.

THE CALIFORNIA CURB SHELF BASKET WATER CLEANSING SYSTEM

HIGH CAPACITY CURB INLET BASKET

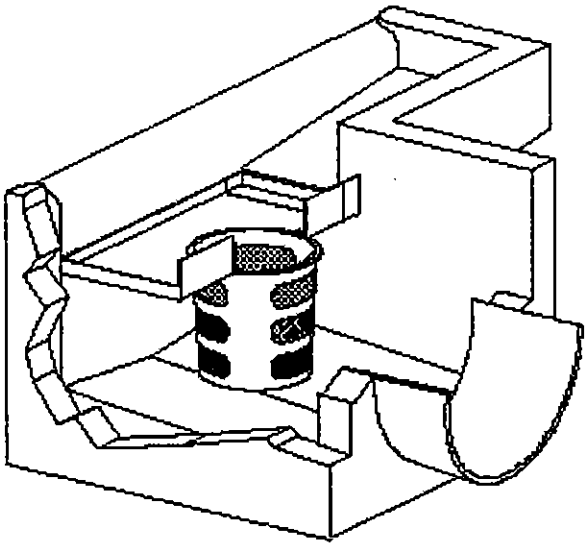

The Curb Shelf Basket Shelf Water Cleaning System

ROUND CANISTER IN SQUARE BASIN

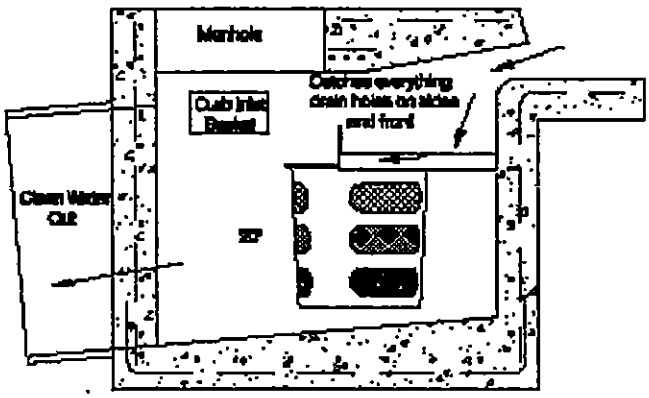

Figure E-4 Example of Curb Inlet Basket

Table E-3 Curb Inlet Inserts (BIOCLEAN) Design Factors

Description	Applications/Siting	Preliminary Design Factors
Treatment structure (filter) installed within curb inlets including hydrocarbon storm booms and filter basket with graduated filtering sizes of openings in sieves. Treatment Mechanisms: • "Curb Inlet Basket", with hydro carbon "storm booms Pollutants removed: • Sediment and particulates • Nutrients • Litter • Hydrocarbons, Oil, Grease • Medium to high heavy metal removal rates (Chromium, Lead, Copper, Iron, Aluminum, Zinc, and Nickel • Organics	• Adaptable to all curb inlets	• treat "first flush" (Q_{ff}) minor storms • Minor storm runoff flows through sorbent "storm boom' hydrocarbon booms placed over the outlet to removes hydrocarbons and heavy metals • system is modular; consists of standard units

LAB TEST RESULTS-RUNOFF WATER SAMPLES
COLLECTED AT LONGO TOYOTA
BETWEEN 09/23/02 AND 11/07/02
(BIO CLEAN FILTERS)
TESTING BY ABN ENV. LABS., SOUTH EL MONTE, CA

No.	POLLUTANT	DETECTION LIMIT	TEST 1 NO FILTER	TEST 2 AFTER 1 WEEK W/FILTER	TEST 3 AFTER 3 WEEKS W/FILTER	TEST 4 AFTER 5 WEEKS W/FILTER
		mg/l	mg/l	mg/l	mg/l	mg/l
1	OIL & GREASE	2.70	199.00	< 2.7	20.00	8.60
2	SOAP	17.00	102.00	165.00	151.00	106.00
3	CHROMIUM	0.05	0.47	< 0.05	< 0.05	< 0.05
4	LEAD	0.10	1.50	0.40	< 0.10	< 0.10
5	COPPER	0.06	1.90	0.13	0.06	0.11
6	IRON	0.05	218.00	3.70	1.03	1.25
7	ALUMINUM	0.20	103.00	1.09	1.20	0.80
8	ZINC	0.10	13.70	1.10	0.34	0.70
9	NICKEL	0.10	0.70	0.30	< 0.10	0.15

BIO CLEAN ENVIRONMENTAL SERVICES INC
STORMWATER FILTRATION SYSTEMS
(760) 433-7640 FAX (760) 433-3176
SALES & SERVICE & INFORMATION

Figure E-5 Laboratory Results-Suntree Technologies (Wet Vault and Filters utilizing hydrocarbon "Storm Booms")

E-4 Hydrodynamic Separators (VORTSENTRY)

Hydrodynamic Separator: Vortechnics Vortsentry hydrodynamic separators will be utilized to treat runoff from private streets within the development. These devices will treat runoff generated from roadways prior to release into natural open space areas.

Vortechnics Vortsentry has been designed to remove 80% of total suspended solids (TSS) with an average particle size of 110 microns. The device is also effective at removing trash and free floating oil and grease. Laboratory testing results have been attached at the end of this section.

- Design Criteria: Vortechnics Vortsentry units, identified on the BMP map within Attachment D will treat runoff generated from drainage roadway basins.

d) Manufacturer's Specifications for the Vortsentry units show a filtration capacity of 1.77 cfs. See specification at the end of this section.

e) Based upon County of San Diego, Storm Water Standards, flow based BMPs are required to treat the first 0.2in/hr of runoff. Therefore, these units can treat flows from tributary areas up to 9.3 acres (Q_{ff}= 1.77 cfs/(0.2in/hr)(0.95) = 9.3 Acres). The largest roadway basin served by filters is approximately 7.2 acres. Resultantly, Vortsentry units have the ability to treat all roadway runoff with excess capacity.

f) Manufacture criteria are presented at the end of this section.

E-5 Bio-Filters

Bio-Filters for Montecito Ranch are existing vegetated / sparsely vegetated open space drainage courses and act as a final filtering of project runoff after flows have been treated by the structural treatment facilities identified within Sections E-1 and E-4 above. However, single-family residential landscaping can act as bio-filtration and will be present on each lot. Undisturbed land in its existing vegetated state acts as additional bio-filtration for the runoff generated from the project. As a result of flows having been treated by structural treatment facilities, detailed above, existing bio-filtration is being identified herein to demonstrate additional mitigation for the development of Montecito Ranch; prior to storm runoff leaving the project. Resultantly, as structural treatment does not rely on Bio-Filters, no calculation or design locations are appropriate.

Bio-filtration swales are vegetated channels that receive directed flow and convey storm water. Bio-filtration strips, also known as vegetated buffer strips, are vegetated sections of land over which storm water flows as overland sheet flow. A schematic illustration of a bio-filter is shown in Figure E-6.

Pollutants are removed by filtration through the grass, sedimentation, adsorption to soil particles, and infiltration through the soil. Swales and strips are mainly effective at removing debris and solid particles, although some dissolved constituents are removed by adsorption into the soil.

The majority of proposed bio-filtration will occur on the single-family lots prior to capture by the Public Storm Drain System. Additionally, down stream of the outlet of the detention basins (post treatment) final bio-filtration will occur; outside the developed areas and outside project lands requiring resource protection.

Appropriate Applications and Siting Constraints: Swales and strips should be considered wherever site conditions and climate allow vegetation to be established and where flow velocities are not high enough to cause scour. Even where strips cannot be sited to accept directed sheet flow, vegetated areas provide treatment of rainfall and reduce the overall impervious surface. Preliminary design factors for detention basins are summarized in Table E-1. grass picnic areas). "California Best Management Practices, Development Handbook", in which swales are not numerically calculated, gives guidelines and recommends the swales to be not less than 100 feet in length. See Attachment D, BMP Map for location of Bio-swales.

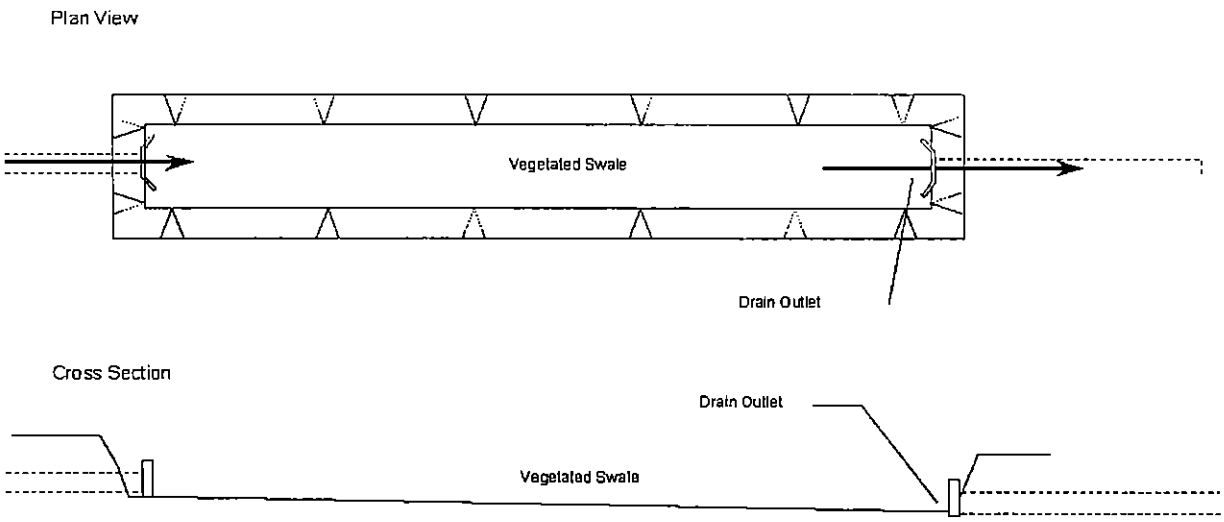

Figure E-6 Example of Bio-filter (Schematic)

Table E-4: Summary of Bio-filtration Design Factors (Strips And Swales)

Description	Applications/Siting	Preliminary Design Factors
Swales are vegetated channels that receive and convey storm water. Strips are vegetated buffer strips over which storm water flows as sheet flow. Treatment Mechanisms: • Filtration through the grass • Sedimentation • Adsorption to soil particles • Infiltration Pollutants removed: • Debris and solid particles • Some dissolved constituents	• Site conditions and climate allow vegetation to be established • Flow velocities not high enough to cause scour	• Swales sized as a conveyance system (per County flood routing and scour procedures) • Swales sized as a conveyance system (per County flood routing and scour procedures) • Swale water depth as shallow as the site will permit • Strips sized as long (in direction of flow) and flat as the site allows • Strips should be free of gullies or rills • No minimum dimensions or slope restrictions for treatment purposes • Vegetation mix appropriate for climates and location

DETENTION BASIN CALCULATIONS

D.B. N-100-13

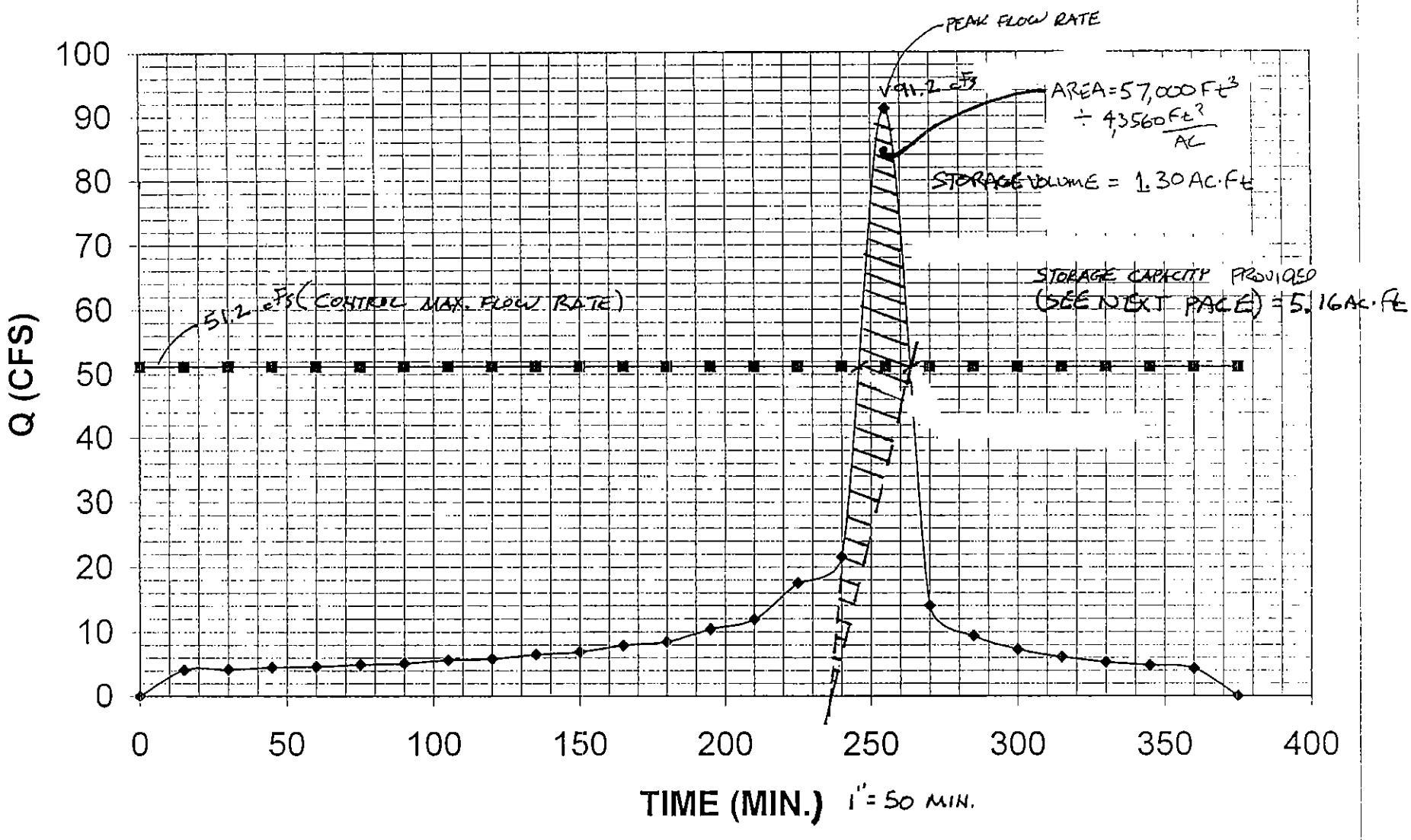
PEAK FLOW RATE
91.2 cfs
AREA=57,000 Ft³ ÷ 43560 Ft²/AC
STORAGE VOLUME = 1.30 AC·Ft
STORAGE CAPACITY PROVIDED (SEE NEXT PAGE) = 5.16 AC·Ft
51.2 cfs (CONTROL MAX. FLOW RATE)
Q (CFS)
100
90
80
70
60
50
40
30
20
10
0
0
50
100
150
200
250
300
350
400
TIME (MIN.)
1" = 50 MIN.

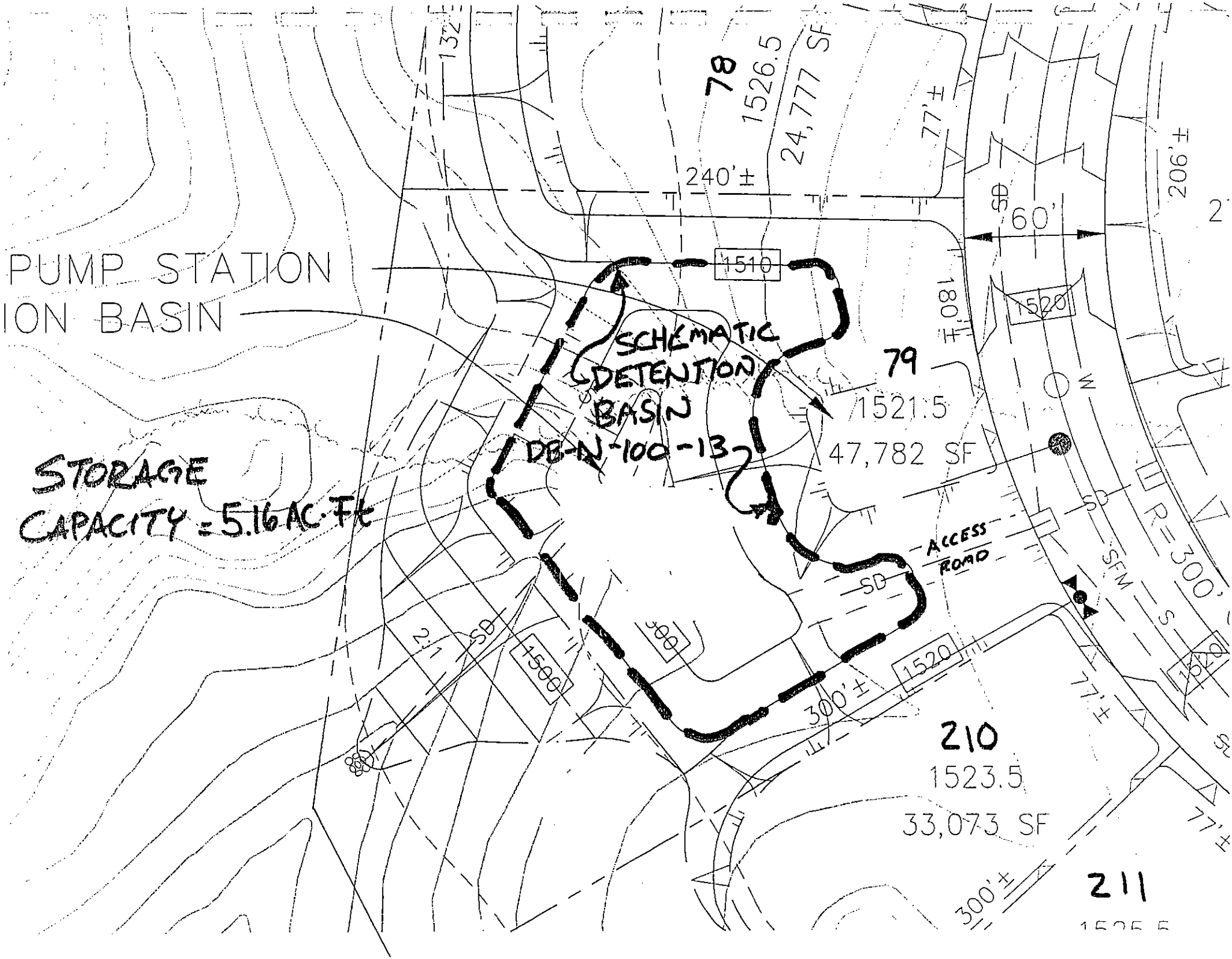

PUMP STATION
ION BASIN
STORAGE
CAPACITY = 5.16 AC·Ft
SCHEMATIC
DETENTION
BASIN
DB-N-100-13
78
1526.5
24,777 SF
240'±
77'±
206'±
60'
1510
1520
180'±
79
1521.5
47,782 SF
ACCESS
ROAD
SD
SFM
R=300'
1500
300'±
210
1523.5
33,073 SF
211

PATIONAL METHOD HYDROGRAPH PROGRAM
COPYRIGHT 1992, 2001 RICK ENGINEERING COMPANY

DETENTION BASIN N-100-13

RUN DATE 6/17/2004
HYDROGRAPH FILE NAME Text1
TIME OF CONCENTRATION 15 MIN.
6 HOUR RAINFALL 3.3 INCHES
BASIN AREA 45.78 ACRES
RUNOFF COEFFICIENT 0.45
PEAK DISCHARGE 91.2 CFS

TIME (MIN) = 0	DISCHARGE (CFS) = 0
TIME (MIN) = 15	DISCHARGE (CFS) = 4.1
TIME (MIN) = 30	DISCHARGE (CFS) = 4.2
TIME (MIN) = 45	DISCHARGE (CFS) = 4.5
TIME (MIN) = 60	DISCHARGE (CFS) = 4.6
TIME (MIN) = 75	DISCHARGE (CFS) = 4.9
TIME (MIN) = 90	DISCHARGE (CFS) = 5.1
TIME (MIN) = 105	DISCHARGE (CFS) = 5.6
TIME (MIN) = 120	DISCHARGE (CFS) = 5.8
TIME (MIN) = 135	DISCHARGE (CFS) = 6.5
TIME (MIN) = 150	DISCHARGE (CFS) = 6.9
TIME (MIN) = 165	DISCHARGE (CFS) = 7.9
TIME (MIN) = 180	DISCHARGE (CFS) = 8.5
TIME (MIN) = 195	DISCHARGE (CFS) = 10.4
TIME (MIN) = 210	DISCHARGE (CFS) = 11.9
TIME (MIN) = 225	DISCHARGE (CFS) = 17.5
TIME (MIN) = 240	DISCHARGE (CFS) = 21.6
TIME (MIN) = 255	DISCHARGE (CFS) = 91.2
TIME (MIN) = 270	DISCHARGE (CFS) = 14
TIME (MIN) = 285	DISCHARGE (CFS) = 9.4
TIME (MIN) = 300	DISCHARGE (CFS) = 7.3
TIME (MIN) = 315	DISCHARGE (CFS) = 6.1
TIME (MIN) = 330	DISCHARGE (CFS) = 5.3
TIME (MIN) = 345	DISCHARGE (CFS) = 4.8
TIME (MIN) = 360	DISCHARGE (CFS) = 4.3
TIME (MIN) = 375	DISCHARGE (CFS) = 0

D.B. N-100-24

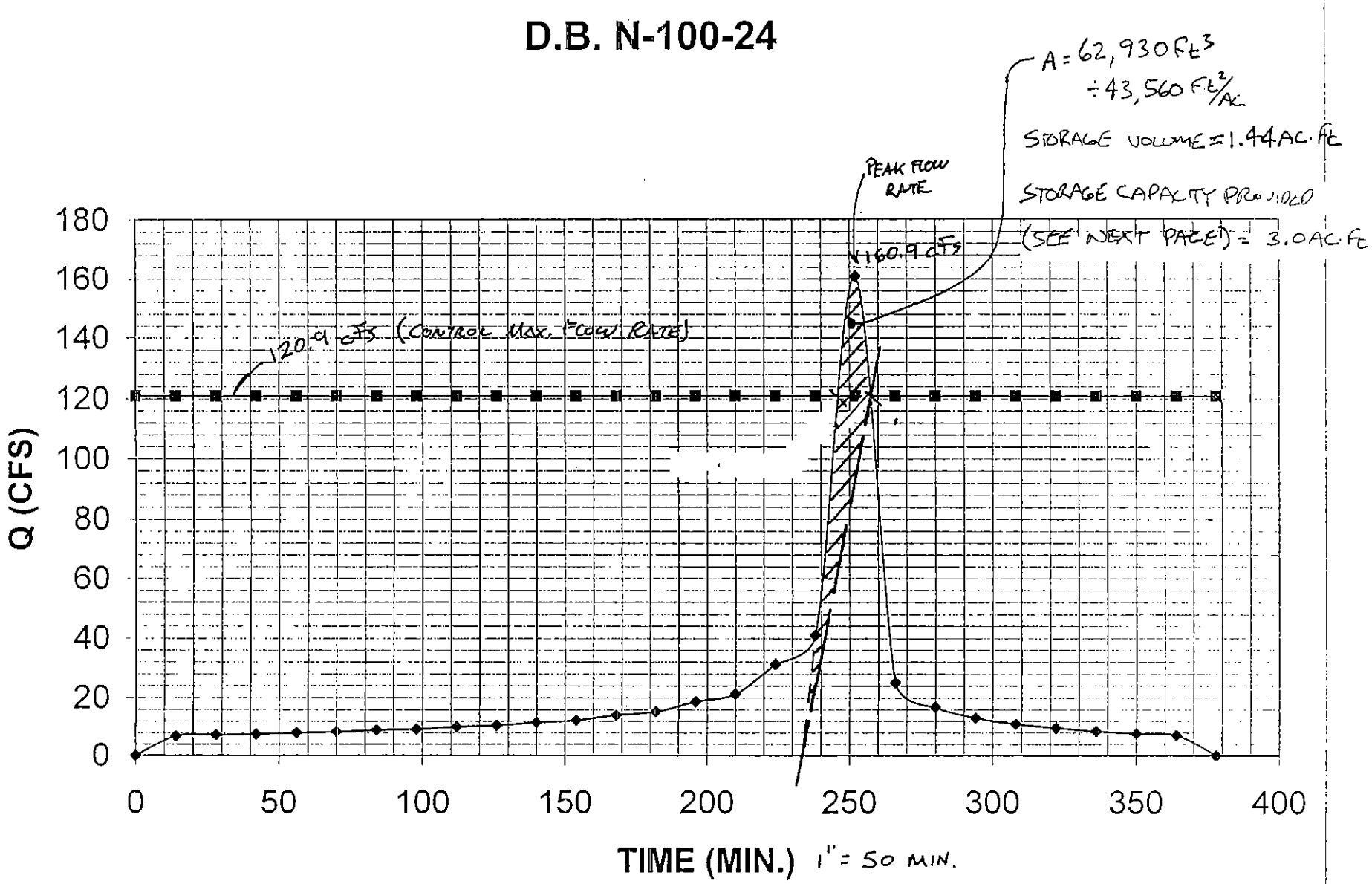
A = 62,930 ft³
÷ 43,560 ft²/AC
STORAGE VOLUME = 1.44 AC·ft
STORAGE CAPACITY PROVIDED
(SEE NEXT PAGE) = 3.0 AC·ft
PEAK FLOW RATE
160.9 CFS
120.9 CFS (CONTROL MAX. FLOW RATE)
Q (CFS)
180
160
140
120
100
80
60
40
20
0
0
50
100
150
200
250
300
350
400
TIME (MIN.)
1" = 50 MIN.

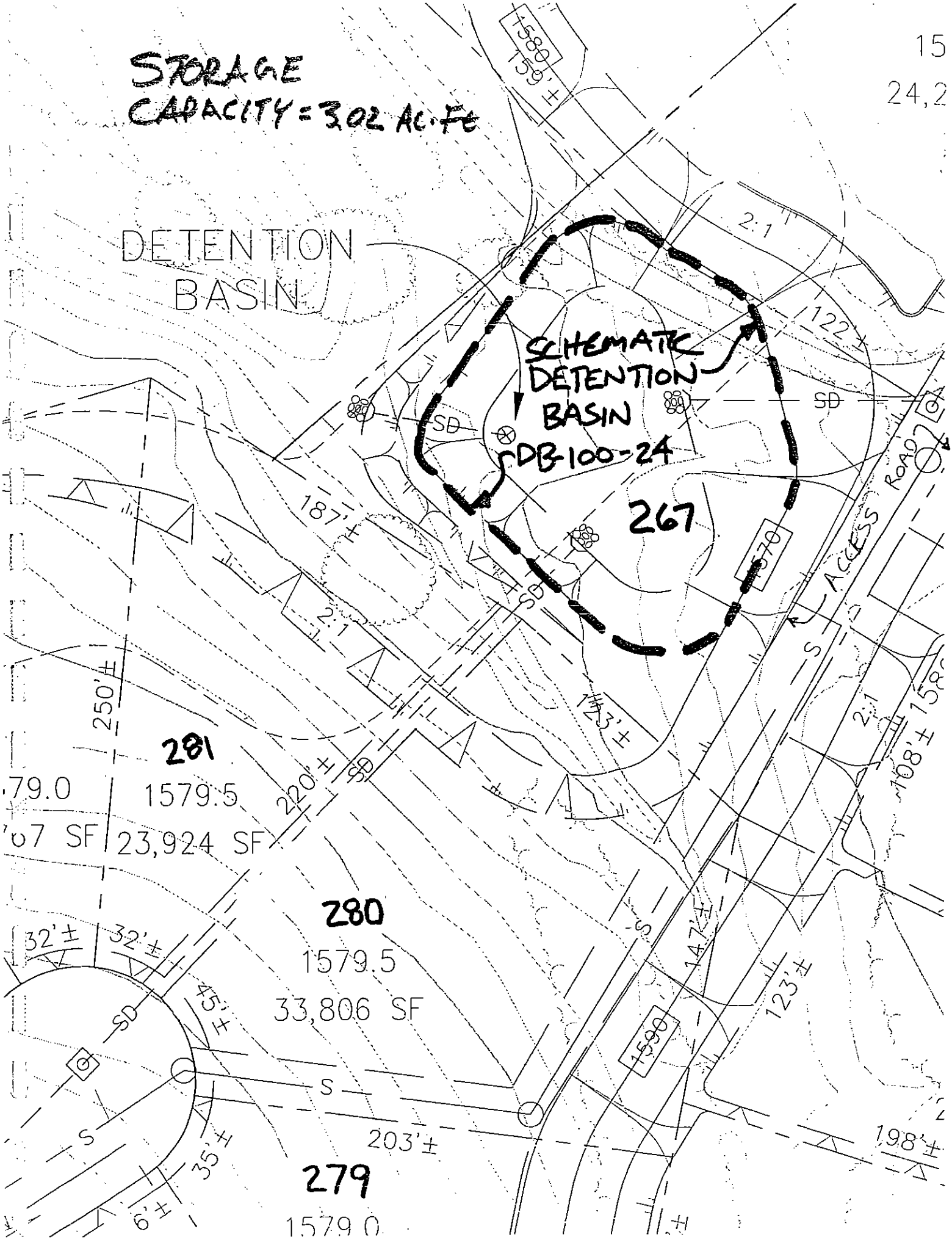
STORAGE
CAPACITY = 3.02 AC·FT
DETENTION
BASIN
SCHEMATIC
DETENTION
BASIN
DB-100-24
267
281
1579.5
23,924 SF
280
1579.5
33,806 SF
279
1579.0
ACCESS ROAD
SD
S
2:1
1580
1590
1570
187'±
122'±
123'±
250'±
220'±
108'±
147'±
123'±
198'±
203'±
32'±
32'±
45'±
35'±
6'±

RATIONAL METHOD HYDROGRAPH PROGRAM
COPYRIGHT 1992, 2001 RICK ENGINEERING COMPANY

DETENTION BASIN N-100-24

RUN DATE 6/17/2004
HYDROGRAPH FILE NAME Text1
TIME OF CONCENTRATION 14 MIN.
6 HOUR RAINFALL 3.3 INCHES
BASIN AREA 84.01 ACRES
RUNOFF COEFFICIENT 0.42
PEAK DISCHARGE 160.9 CFS

TIME (MIN) = 0	DISCHARGE (CFS) = 0
TIME (MIN) = 14	DISCHARGE (CFS) = 6.9
TIME (MIN) = 28	DISCHARGE (CFS) = 7.3
TIME (MIN) = 42	DISCHARGE (CFS) = 7.5
TIME (MIN) = 56	DISCHARGE (CFS) = 8
TIME (MIN) = 70	DISCHARGE (CFS) = 8.3
TIME (MIN) = 84	DISCHARGE (CFS) = 8.9
TIME (MIN) = 98	DISCHARGE (CFS) = 9.2
TIME (MIN) = 112	DISCHARGE (CFS) = 10
TIME (MIN) = 126	DISCHARGE (CFS) = 10.5
TIME (MIN) = 140	DISCHARGE (CFS) = 11.6
TIME (MIN) = 154	DISCHARGE (CFS) = 12.3
TIME (MIN) = 168	DISCHARGE (CFS) = 14.1
TIME (MIN) = 182	DISCHARGE (CFS) = 15.3
TIME (MIN) = 196	DISCHARGE (CFS) = 18.7
TIME (MIN) = 210	DISCHARGE (CFS) = 21.3
TIME (MIN) = 224	DISCHARGE (CFS) = 31.3
TIME (MIN) = 238	DISCHARGE (CFS) = 41.1
TIME (MIN) = 252	DISCHARGE (CFS) = 160.9
TIME (MIN) = 266	DISCHARGE (CFS) = 25.1
TIME (MIN) = 280	DISCHARGE (CFS) = 16.8
TIME (MIN) = 294	DISCHARGE (CFS) = 13.1
TIME (MIN) = 308	DISCHARGE (CFS) = 11
TIME (MIN) = 322	DISCHARGE (CFS) = 9.6
TIME (MIN) = 336	DISCHARGE (CFS) = 8.5
TIME (MIN) = 350	DISCHARGE (CFS) = 7.7
TIME (MIN) = 364	DISCHARGE (CFS) = 7.1
TIME (MIN) = 378	DISCHARGE (CFS) = 0

D.B. N100-38

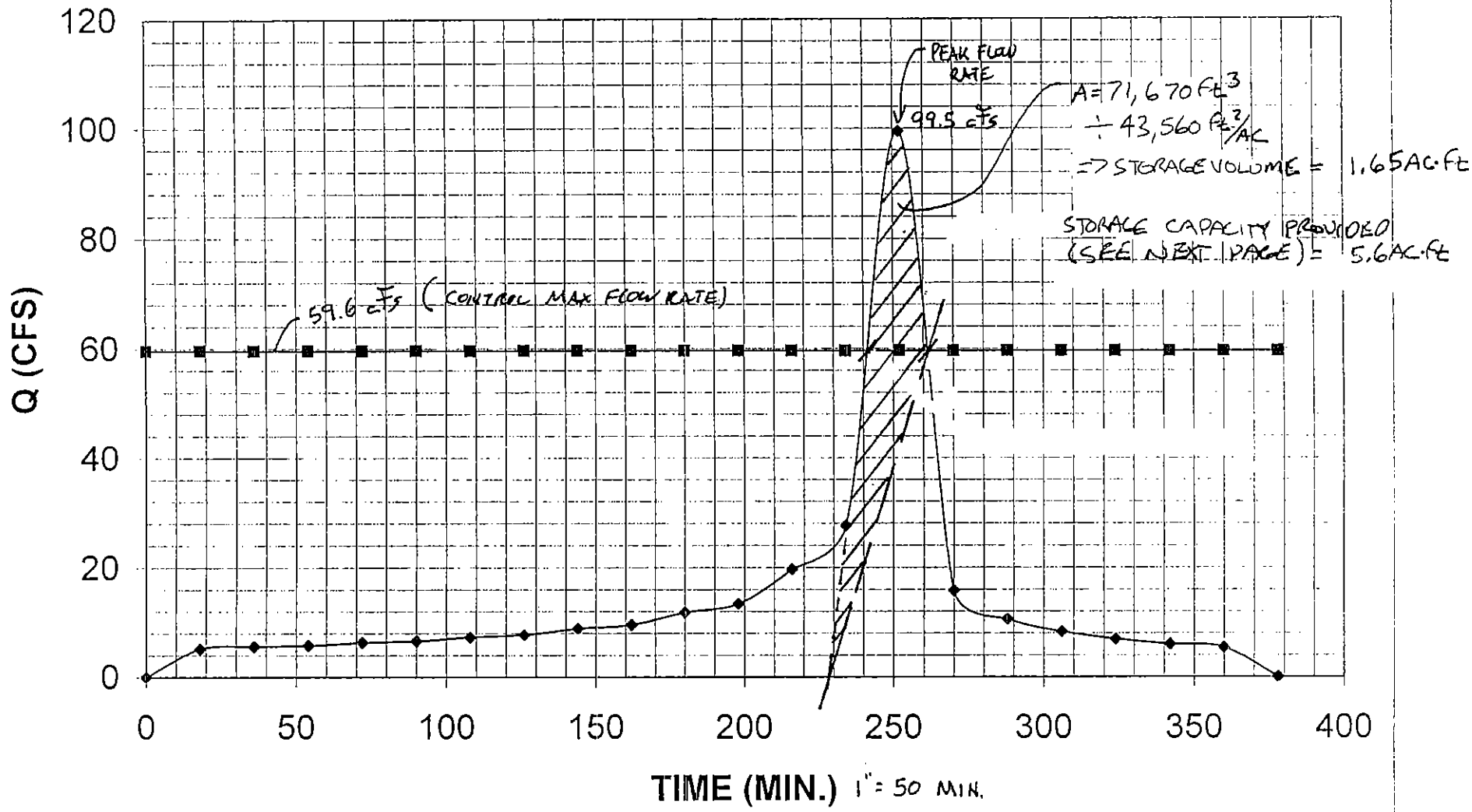
120
100
80
60
40
20
0
Q (CFS)
0
50
100
150
200
250
300
350
400
TIME (MIN.)
1" = 50 MIN.
PEAK FLOW RATE
99.5 cfs
A = 71,670 ft³
÷ 43,560 ft²/AC
=> STORAGE VOLUME = 1.65 AC·ft
STORAGE CAPACITY PROVIDED (SEE NEXT PAGE) = 5.6 AC·ft
59.6 cfs (CONTROL MAX FLOW RATE)

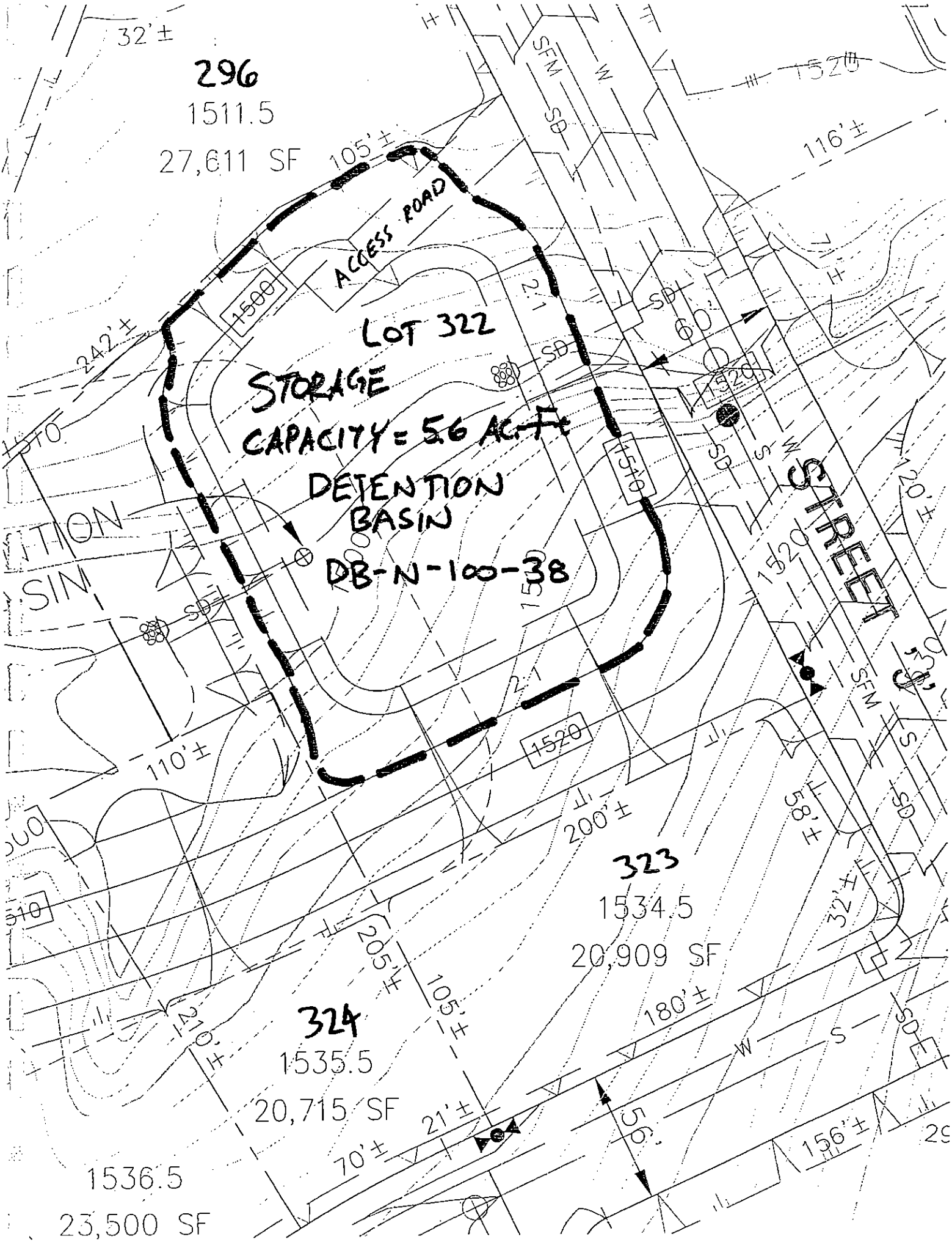
296
1511.5
27,611 SF
ACCESS ROAD
LOT 322
STORAGE
CAPACITY = 5.6 AC-Ft
DETENTION
BASIN
DB-N-100-38
323
1534.5
20,909 SF
324
1535.5
20,715 SF
1536.5
23,500 SF
STREET

RATIONAL METHOD HYDROGRAPH PROGRAM
COPYRIGHT 1992, 2001 RICK ENGINEERING COMPANY

DETENTION BASIN N-100-38

RUN DATE 6/17/2004
HYDROGRAPH FILE NAME Text1
TIME OF CONCENTRATION 18 MIN.
6 HOUR RAINFALL 3.3 INCHES
BASIN AREA 59.34 ACRES
RUNOFF COEFFICIENT 0.44
PEAK DISCHARGE 99.5 CFS

TIME (MIN) = 0	DISCHARGE (CFS) = 0
TIME (MIN) = 18	DISCHARGE (CFS) = 5.2
TIME (MIN) = 36	DISCHARGE (CFS) = 5.6
TIME (MIN) = 54	DISCHARGE (CFS) = 5.8
TIME (MIN) = 72	DISCHARGE (CFS) = 6.3
TIME (MIN) = 90	DISCHARGE (CFS) = 6.6
TIME (MIN) = 108	DISCHARGE (CFS) = 7.3
TIME (MIN) = 126	DISCHARGE (CFS) = 7.7
TIME (MIN) = 144	DISCHARGE (CFS) = 8.9
TIME (MIN) = 162	DISCHARGE (CFS) = 9.6
TIME (MIN) = 180	DISCHARGE (CFS) = 11.8
TIME (MIN) = 198	DISCHARGE (CFS) = 13.4
TIME (MIN) = 216	DISCHARGE (CFS) = 19.7
TIME (MIN) = 234	DISCHARGE (CFS) = 27.6
TIME (MIN) = 252	DISCHARGE (CFS) = 99.5
TIME (MIN) = 270	DISCHARGE (CFS) = 15.8
TIME (MIN) = 288	DISCHARGE (CFS) = 10.6
TIME (MIN) = 306	DISCHARGE (CFS) = 8.3
TIME (MIN) = 324	DISCHARGE (CFS) = 6.9
TIME (MIN) = 342	DISCHARGE (CFS) = 6
TIME (MIN) = 360	DISCHARGE (CFS) = 5.4
TIME (MIN) = 378	DISCHARGE (CFS) = 0

D.B. N600/700-6

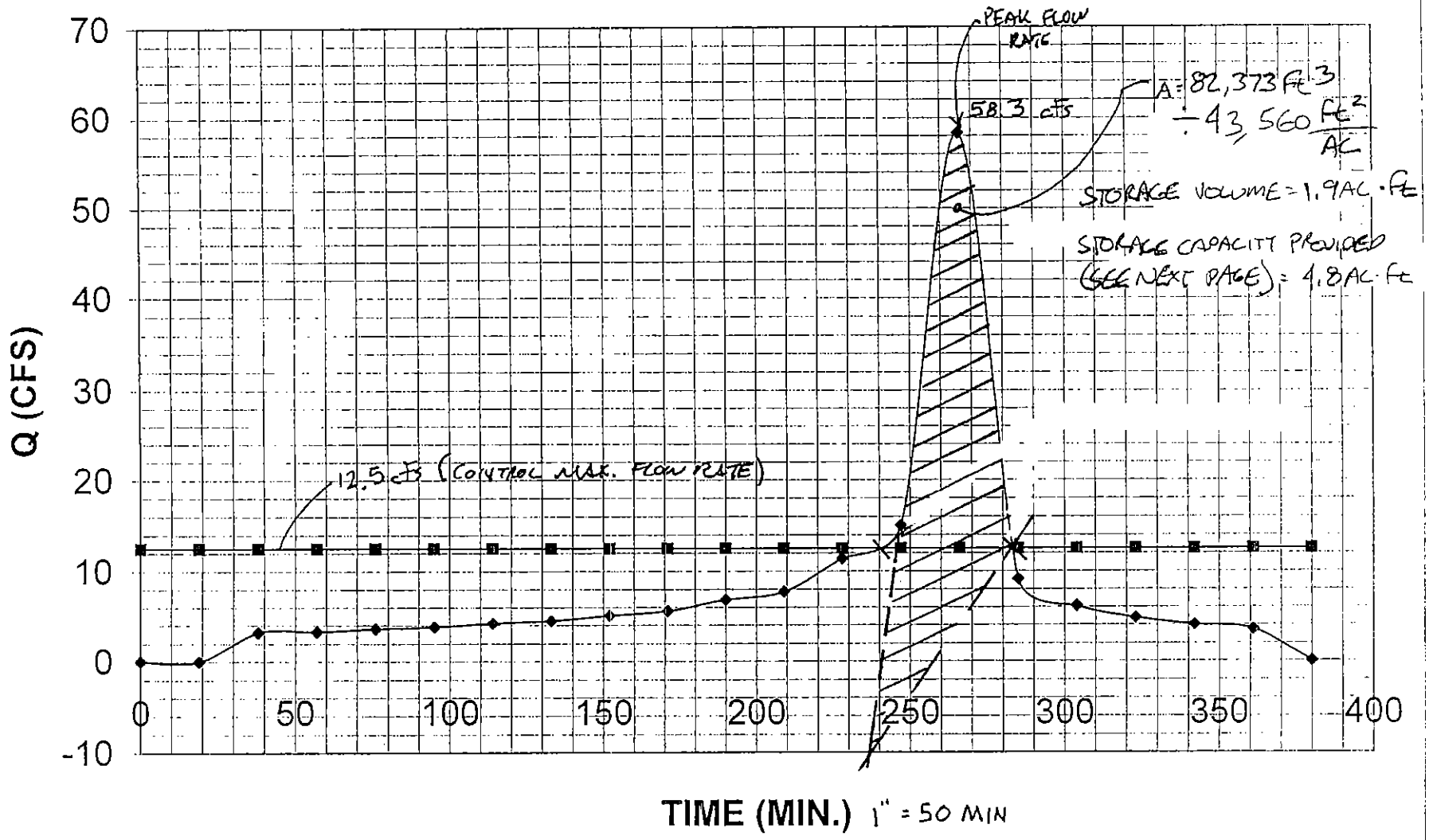
PEAK FLOW RATE
58.3 cfs
A = 82,373 ft³ ÷ 43,560 ft²/AC
STORAGE VOLUME = 1.9 AC·ft
STORAGE CAPACITY PROVIDED (SEE NEXT PAGE) = 4.8 AC·ft
12.5 cfs (CONTROL MAX. FLOW RATE)
Q (CFS)
70
60
50
40
30
20
10
0
-10
0
50
100
150
200
250
300
350
400
TIME (MIN.) 1" = 50 MIN

STORAGE CAPACITY = 4.8 AC-Ft

1" = 50'

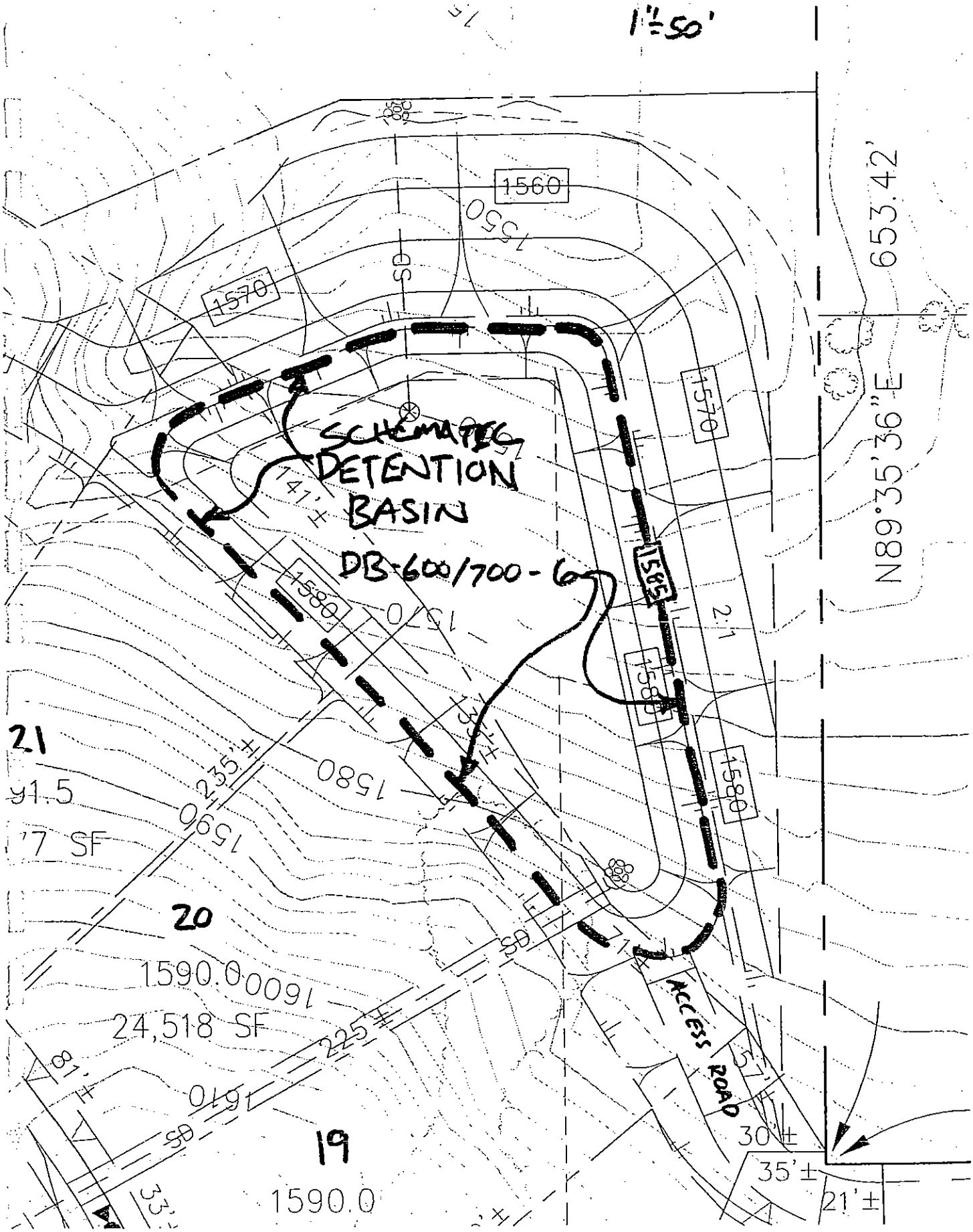

DETENTION BASIN DB-600/700-6

RATIONAL METHOD HYDROGRAPH PROGRAM
COPYRIGHT 1992, 2001 RICK ENGINEERING COMPANY

RUN DATE 6/17/2004
HYDROGRAPH FILE NAME Text1
TIME OF CONCENTRATION 19 MIN.
6 HOUR RAINFALL 3.3 INCHES
BASIN AREA 34.66 ACRES
RUNOFF COEFFICIENT 0.45
PEAK DISCHARGE 58.3 CFS

TIME (MIN) = 0	DISCHARGE (CFS) = 0
TIME (MIN) = 19	DISCHARGE (CFS) = 0
TIME (MIN) = 38	DISCHARGE (CFS) = 3.2
TIME (MIN) = 57	DISCHARGE (CFS) = 3.3
TIME (MIN) = 76	DISCHARGE (CFS) = 3.6
TIME (MIN) = 95	DISCHARGE (CFS) = 3.8
TIME (MIN) = 114	DISCHARGE (CFS) = 4.2
TIME (MIN) = 133	DISCHARGE (CFS) = 4.5
TIME (MIN) = 152	DISCHARGE (CFS) = 5.1
TIME (MIN) = 171	DISCHARGE (CFS) = 5.6
TIME (MIN) = 190	DISCHARGE (CFS) = 6.8
TIME (MIN) = 209	DISCHARGE (CFS) = 7.7
TIME (MIN) = 228	DISCHARGE (CFS) = 11.4
TIME (MIN) = 247	DISCHARGE (CFS) = 15
TIME (MIN) = 266	DISCHARGE (CFS) = 58.3
TIME (MIN) = 285	DISCHARGE (CFS) = 9.1
TIME (MIN) = 304	DISCHARGE (CFS) = 6.1
TIME (MIN) = 323	DISCHARGE (CFS) = 4.8
TIME (MIN) = 342	DISCHARGE (CFS) = 4
TIME (MIN) = 361	DISCHARGE (CFS) = 3.5
TIME (MIN) = 380	DISCHARGE (CFS) = 0

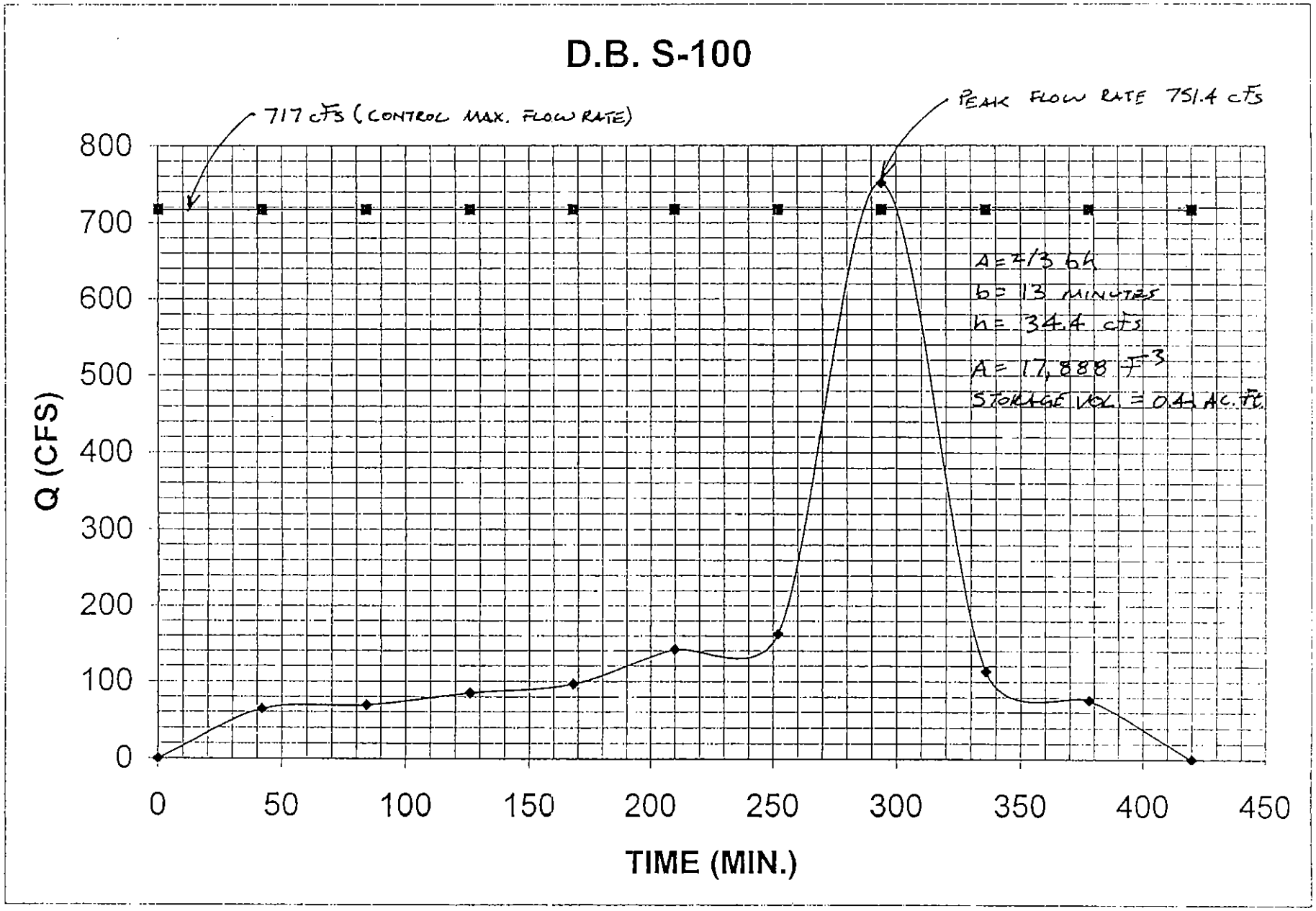
D.B. S-100
717 cfs (CONTROL MAX. FLOW RATE)
PEAK FLOW RATE 751.4 cfs
A = 2/3 bh
b = 13 MINUTES
h = 34.4 cfs
A = 17,888 ft^3
STORAGE VOL. = 0.41 AC. FT.
Q (CFS)
800
700
600
500
400
300
200
100
0
0
50
100
150
200
250
300
350
400
450
TIME (MIN.)

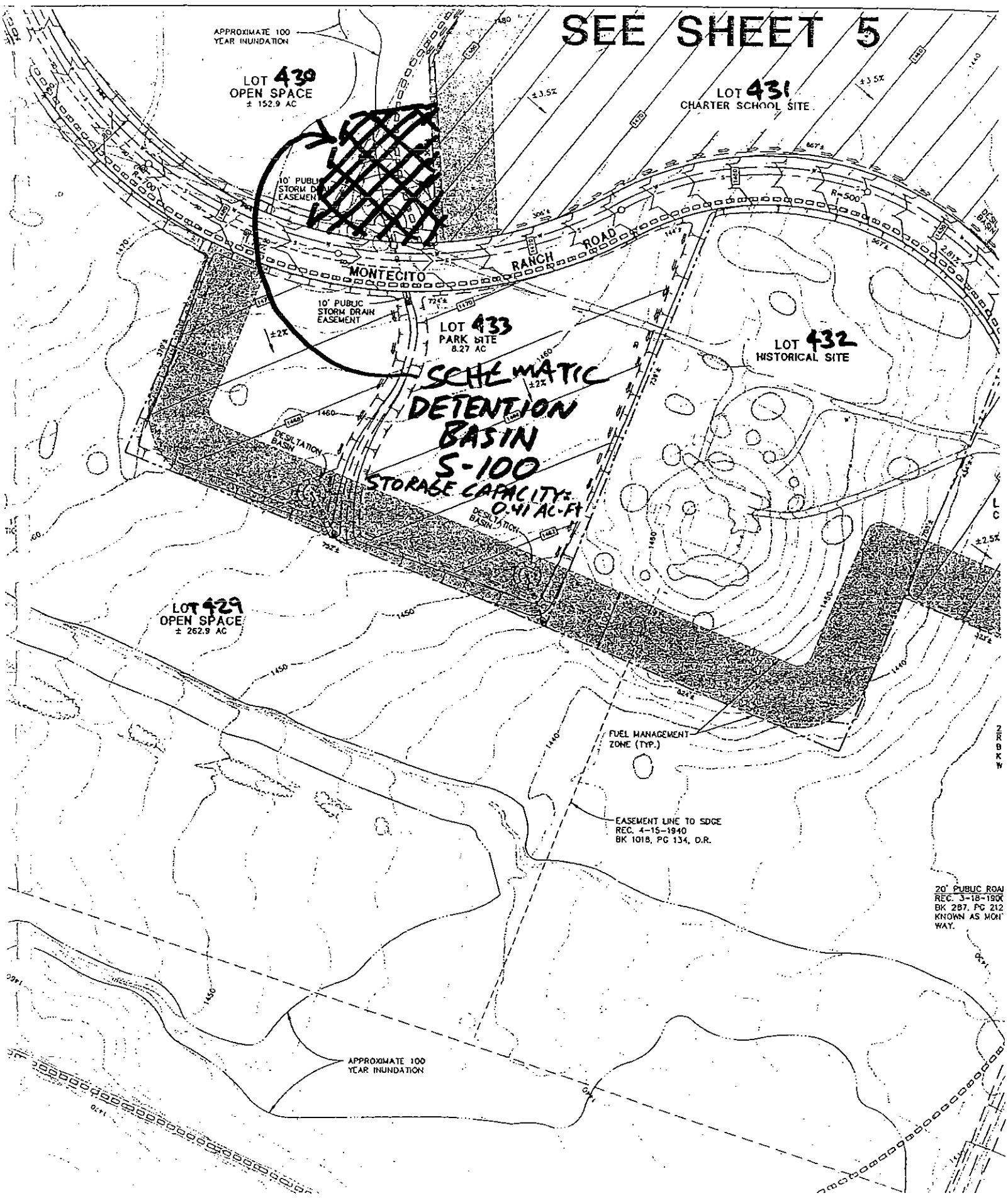
SEE SHEET 5
APPROXIMATE 100 YEAR INUNDATION
LOT 430
OPEN SPACE
± 152.9 AC
LOT 431
CHARTER SCHOOL SITE
10' PUBLIC STORM DRAIN EASEMENT
MONTECITO RANCH ROAD
10' PUBLIC STORM DRAIN EASEMENT
LOT 433
PARK SITE
8.27 AC
LOT 432
HISTORICAL SITE
SCHEMATIC DETENTION BASIN S-100
STORAGE CAPACITY= 0.41 AC-FT
DESILTATION BASIN
DESILTATION BASIN
LOT 429
OPEN SPACE
± 262.9 AC
FUEL MANAGEMENT ZONE (TYP.)
EASEMENT LINE TO SDGE
REC. 4-15-1940
BK 1018, PG 134, D.R.
20' PUBLIC ROA
REC. 3-18-190
BK 287, PG 212
KNOWN AS MON
WAY.
APPROXIMATE 100 YEAR INUNDATION

COPYRIGHT 1992, 2001 RICK ENGINEERING COMPANY

RUN DATE 6/29/2004
HYDROGRAPH FILE NAME Text1
TIME OF CONCENTRATION 42 MIN.
6 HOUR RAINFALL 3.3 INCHES
BASIN AREA 926.9 ACRES
RUNOFF COEFFICIENT 0.35
PEAK DISCHARGE 751.4 CFS

TIME (MIN) = 0	DISCHARGE (CFS) = 0
TIME (MIN) = 42	DISCHARGE (CFS) = 63.9
TIME (MIN) = 84	DISCHARGE (CFS) = 69.2
TIME (MIN) = 126	DISCHARGE (CFS) = 84.6
TIME (MIN) = 168	DISCHARGE (CFS) = 96.4
TIME (MIN) = 210	DISCHARGE (CFS) = 141.5
TIME (MIN) = 252	DISCHARGE (CFS) = 162.8
TIME (MIN) = 294	DISCHARGE (CFS) = 751.4
TIME (MIN) = 336	DISCHARGE (CFS) = 113.5
TIME (MIN) = 378	DISCHARGE (CFS) = 76
TIME (MIN) = 420	DISCHARGE (CFS) = 0

REFERENCES

URBAN RUNOFF QUALITY MANAGEMENT

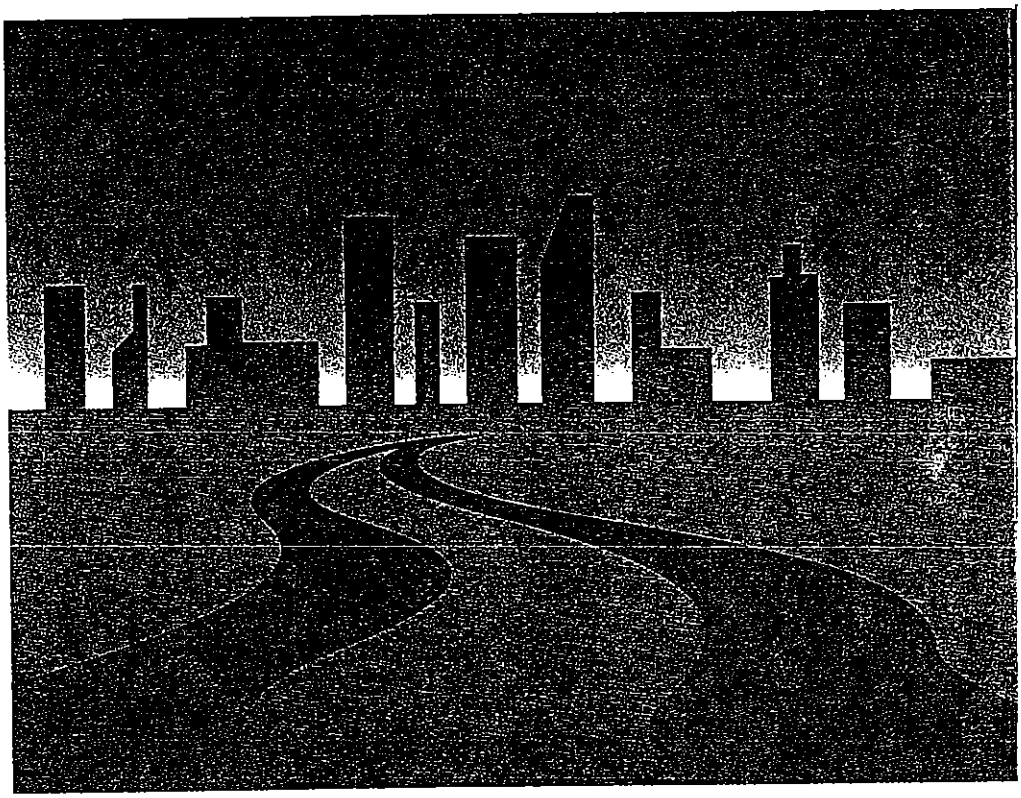

WEF Manual of Practice No. 23
ASCE Manual and Report on Engineering Practice No. 87

Water Environment Federation®
Preserving & Enhancing the Global Water Environment

ASCE AMERICAN SOCIETY OF CIVIL ENGINEERS

AN APPROACH FOR ESTIMATING STORMWATER QUALITY CAPTURE VOLUME.

Estimating a Maximized Water Quality Capture Volume. Whenever local resources permit, the stormwater quality capture volume may best be found using continuous hydrologic simulation and local long-term hourly (or lesser time increment) precipitation records (see Chapter 3). However, it is possible to obtain a first-order estimate of the needed capture volume using simplified procedures that target the most typically occurring population of runoff events.

Figure 5.3 contains a map of the contiguous 48 states of the U.S. with the mean annual runoff-producing rainfall depths superimposed (Driscoll *et al.*, 1989). These mean depths are based on a 6-hour interevent time to define a new storm event and a minimum depth of 2.5 mm (0.10 in.) of precipitation for a storm to produce incipient runoff. After an extensive analysis of a number of long-term precipitation records from different meteorological regions of the U.S., Guo and Urbonas (1995) found simple regression equations to relate the mean precipitation depths in Figure 5.3 to "maximized" water quality runoff capture volumes (that is, the knee of the cumulative probability curve).

The analytical procedure was based on a simple transformation of each storm's volume of precipitation to a runoff volume using a coefficient of runoff. To help with this transformation, a third-order regression equation, Equation 5.1 (Urbonas *et al.*, 1990), was derived using data from more than 60 urban watersheds (U.S. EPA, 1983). Because the data were collected nationwide over a 2-year period, Equation 5.1 should have broad applicability in the U.S. for smaller storm events.

$$C = 0.858i^3 - 0.78i^2 + 0.774i + 0.04 \qquad (5.1)$$

Where

C = runoff coefficient, and

i = watershed imperviousness ratio; namely, percent total imperviousness divided by 100.

Equation 5.2 relates mean precipitation depth taken from Figure 5.3 to the "maximized" detention volume. The coefficients listed in Table 5.4 are based on an analysis of long-term data from seven precipitation gauging sites located in different meteorological regions of the U.S. The correlation of determination coefficient, r^2, has a range of 0.80 to 0.97, which implies a strong level of reliability.

$$P_0 = (a \cdot C) \cdot P_6 \quad \text{(in.)} \qquad (5.2)$$

Where

P_0 = maximized detention volume determined using either the event capture ratio or the volume capture ratio as its basis, watershed in. (mm);

Table 5.4 Values of coefficient a in Equation 5.2 for finding the maximized detention storage volume (Guo and Urbonas, 1995).[a]

		Drain time of capture volume		
		12 hours	24 hours	48 hours
Event capture ratio	a =	1.109	1.299	1.545
	r^2 =	0.97	0.91	0.85
Volume capture ratio	a =	1.312	1.582	1.963
	r^2 =	0.80	0.93	0.85

[a] Approximately 85th percentile runoff event (range 82 to 88%).

a = regression constant from least-squares analysis;
C = watershed runoff coefficient; and
P_6 = mean storm precipitation volume, watershed in. (mm).

Table 5.4 lists the maximized detention volume/mean precipitation ratios based on either the ratio of the total number of storm runoff events captured or the fraction of the total stormwater runoff volume from a catchment. These can be used to estimate the annual average maximized detention volume at any given site. All that is needed is the watershed's runoff coefficient and its mean annual precipitation.

The actual size of the runoff event to target for water quality enhancement should be based on the evaluation of local hydrology and water quality needs. However, examination of Table 5.3 indicates that the use of larger detention volumes does not significantly improve the average annual removal of total suspended sediments or other settleable constituents. It is likely that an extended detention volume equal to a volume between the runoff from a mean precipitation event taken from Figure 5.3 and the maximized event obtained using Equation 5.2 will provide the optimum-sized and most cost-effective BMP facility. A BMP sized to capture such a volume will also capture the leading edge (that is, first flush) of the runoff hydrograph resulting from larger storms.

Runoff volumes that exceed the design detention volume either bypass the facility or receive less efficient treatment than do the smaller volume storms and have only a minimal net effect on the detention basin's performance. If, however, the design volume is larger and has an outlet to drain it in the same amount of time as the smaller basin, the smallest runoff events will be detained only for a brief interval by the larger outlet. Analysis of long-term precipitation records in the U.S. shows that small events always seem to have the greatest preponderance. As a result, oversizing the detention can cause the most frequent runoff events to receive less treatment than provided by properly designed smaller basins.

TREATMENT BMP MANUFACTURER'S SPECIFICATIONS

ClearWater BMP

The ClearWater BMP Curb Inlet Filter

The ClearWater BMP is a powerful advancement in sidewalk curb inlet filtration technology. The patent-pending, filter train design allows stormwater flows to be screened, settled, and then filtered, all within the confines of an existing curb inlet drain box. This aggressive filtration design significantly reduces concentrations of trash, sediment, hydrocarbons, metals, and nutrients. Specifically designed for retrofitting within the existing curb and gutter infrastructure, it handles heavy storm flows with ease, dry-weather flows expertly, utilizes mosquito free technology and requires no excavation or concrete modification. The ClearWater BMP truly is your curb inlet pollution solution.

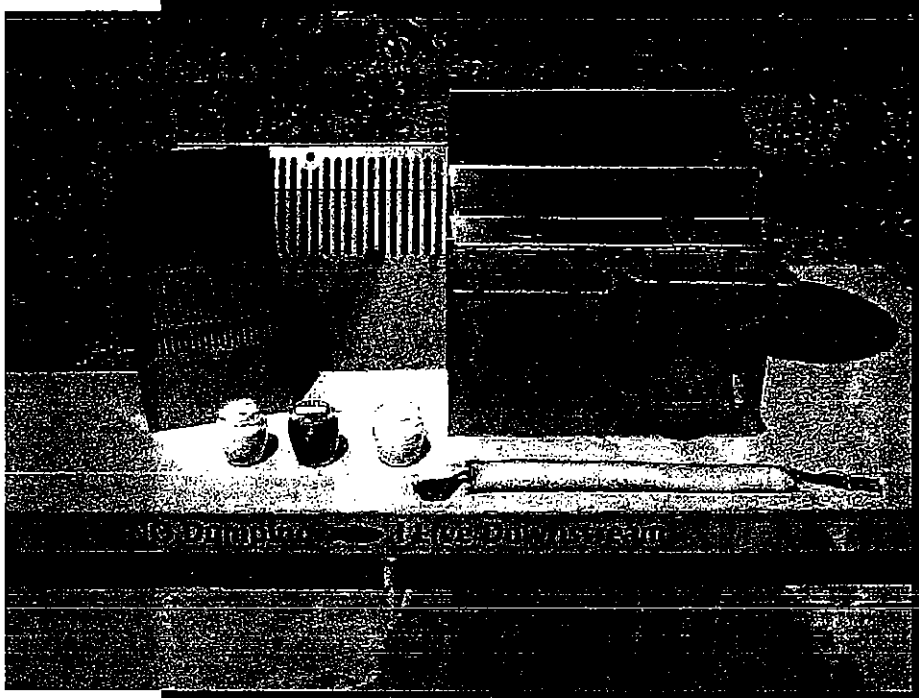

Patent Pending

Features

- Fits into existing curb inlets
- Non-scouring
- Large storage capacity
- Easy street level maintenance
- No clogging under heavy flows
- Durable stainless steel construction
- Affordable

Benefits

- Improves downstream water quality
- High removal rate of Total Suspended Solids – 97%
- Located close to pollutant sources
- Reduces concentrations of trash, sediment, hydrocarbons, metals and nutrients
- NPDES Compliant – now and in the future

ClearWater Solutions™

STORM DRAIN SPECIALISTS

2259 Lone Oak Lane • Vista, CA 92084

www.ClearWaterBMP.com

Toll Free: 800-758-8817 • F: 760-598-1371

System Operation

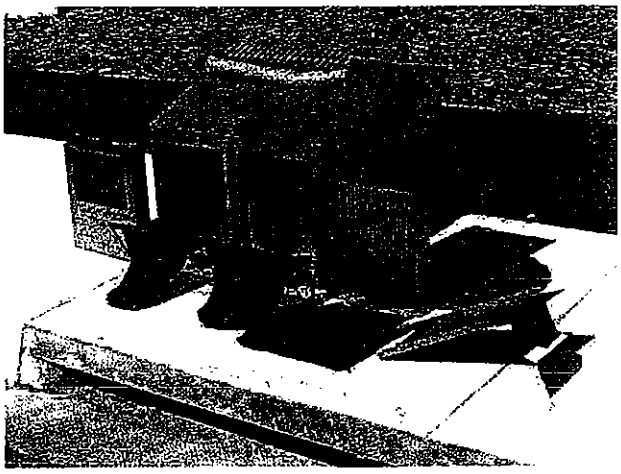

The ClearWater BMP is a powerful advancement in sidewalk curb inlet filtration technology. Specifically designed for retrofitting under the sidewalk within the curb and gutter system, it handles heavy storm flows with ease, utilizes mosquito free technology, and requires no excavation or concrete modification.

The revolutionary design of the ClearWater BMP allows storm water to be screened three times, settled three times, make constant surface contact with an oil and grease separator, pass through a synthetic mesh filter, and finally pass through a column of porous media comprised of natural zeolites, perlite, and activated carbon. Filter media can be tailored to site specific needs. These media and the unique engineering design of the filter support containing them, enhances removal of smaller particulates, thus improving the quality of life downstream.

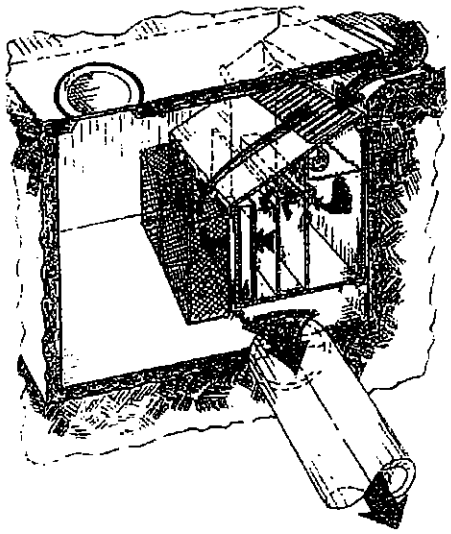

Performance Testing

Using the "typical" storm water calculations of 0.2 inches (3,780 gallons) of rain per hour for an ordinary curb inlet, the ClearWater BMP performed very well. Proven testing from San Diego State University shows the ClearWater BMP has removal rates of 97% for total suspended solids (TSS), 86% for oil and grease (O & G), 81% for lead (Pb), and 83% for zinc (Zn). Satisfactory rates of removal were accomplished with heavy metals in solution, a claim that will not be found in most competitors literature since most only clean out larger settled constituents, while the finer materials flow downstream contaminating wildlife and beaches.

Removal with Mixed-Media Filter at 64 GPM

	"Typical" % Removal with ClearWater BMP
TSS: Total Suspended Solids	97
O&G: Oil & Grease	86
Pb: Lead	81
Zn: Zinc	83

What is your NPDES compliance criteria?

ClearWater BMP Treatment Capacity					
Rainfall Intensity, Inches/Hr.	0.20	0.25	0.50	0.75	1.0
R.O.W. Treatment Capacity, Acres	2.5	2.0	1.0	0.67	0.50

200 GPM (.46 CFS) before bypassing occurs.

CLEARWATER SOLUTIONS
STORM DRAIN SPECIALISTS

2259 Lone Oak Lane • Vista, CA 92084
www.ClearWaterBMP.com • Toll Free: 800-758-8817 • F: 760-598-1371

CLEARWATER SOLUTIONS®, INC
2259 Lone Oak Lane
Vista, CA 92084
800-758-8817

"NPDES compliant now and in the future!"

MAINTENANCE GUIDELINES
For the ClearWater UNIT

INTRODUCTION

The ClearWater BMP unit is an important and effective component of your storm water management program and proper operation and maintenance of the unit is essential to demonstrate your compliance with local, state, and federal water pollution control requirements.

This is a patent-pending multi-media filtration design combined with pre-settling sedimentation containment and over flow by-pass protection. Water flow enters the unit and is directed into a pre-settling sedimentation chamber that collects heavy sediments and debris passing through the cover. Large trash and debris flow over the top into mesh trash baskets. The second and third sedimentation chamber is entered by the water flow to further settle lighter materials. The cleaner water then encounters the media filters. The media is a special blend of Perlite, Zeolite, and Activated Carbon that filters out a variety of organics, metals, and other contaminants from the runoff. Water then passes through the front of the treatment chamber into the catch basin. A properly maintained unit will achieve substantial reductions of contaminants from entering surface waters. To accomplish this, the filtration chamber is designed to handle 200 gpm through the media chamber, effectively handling up to 1" of rain per hour in a properly designed drain. Units strategically placed downstream from "hot spots" such as gas stations, parking lots and other industrial/commercial sites containing higher contaminate loadings, give municipalities and businesses an effective tool for reducing pollutants.

ClearWater BMP CLEANOUT

The frequency of cleaning the ClearWater BMP unit will depend upon the generation of trash and debris and sediments in your application. Cleanout and preventive maintenance schedules will be determined based on operating experience unless precise pollutant loadings have been determined. The unit should be periodically inspected to determine the amount of accumulated pollutants and to ensure that the cleanout frequency is adequate to handle the predicted pollutant load being processed by the ClearWater BMP unit. Cleanouts have been averaging two times per year in Southern California.

NEW INSTALLATIONS

Check the condition of the unit after every runoff event for the first 90 days. The visual inspection should ascertain that the unit is functioning properly (no blockages or obstructions to inlet), measuring the amount of solid materials that have accumulated in the trash collection nets and the amount of fine sediment accumulated in the settling areas. Schedules for inspections and cleanout should be based on storm events and pollutant accumulation.

ONGOING OPERATION
During the rainfall season, the unit should be inspected at least once every 60 days. The floatables should be removed and the settling areas cleaned when the primary settling chamber is 40%-50% full. If floatables accumulate more rapidly than the settleable solids, the floatables could be removed using a vactor truck. The trash baskets may need to be emptied more often, depending on the accumulation of larger trash and debris.

Cleanout of the ClearWater BMP unit at the end of a rainfall season is recommended because of the nature of pollutants collected and the potential for odor generation from the decomposition of material being collected and retained.

USE OF SORBENTS
The addition of sorbents is a unique enhancement capability special to ClearWater BMP units, enabling increased oil and grease capture efficiencies beyond that obtainable by conventional oil baffle systems.

RECOMMENDED OIL SORBENTS
The sorbent sock material should be replaced when it is fully discolored and hard from absorbing hydrocarbons. The sorbent may require disposal as a special or hazardous waste, but will depend on local and state regulatory requirements.

CLEANOUT AND DISPOSAL
A vactor truck is recommended for cleanout of the ClearWater BMP unit and can be easily accomplished in less than 15 minutes for most installations. Standard vactor operations should be employed in the cleanout of the ClearWater BMP unit. Disposal of material from the ClearWater BMP unit should be in accordance with the local municipality's requirements. Disposal of the decant material to a POTW is recommended. Field decanting to the storm drainage system is not recommended. Solids can be disposed of in a similar fashion as those materials collected from street sweeping operations and catch-basin cleanouts.

CONFINED SPACE
The ClearWater BMP unit is in a confined space environment and only properly trained personnel possessing the necessary safety equipment should enter the unit to perform maintenance or inspection procedures. Inspections of the components and maintenance procedures can, in most cases, be accomplished without confined space entry, through manhole access or directly through the curb inlet.

RECORDS OF INSTALLATION AND MAINTENANCE
CLEARWATER SOLUTIONS, INC. recommends that the owner maintain annual records of the operation and maintenance of the ClearWater BMP unit to document the effective maintenance of this important component of your storm water management program. The Installation and Maintenance Record form is suggested and should be retained for a minimum period of three years.

CLEARWATER SOLUTIONS
STORM DRAIN SPECIALISTS

SAN DIEGO STATE UNIVERSITY

SDSU Test Data
The ClearWater BMP

Performance Testing of CLEARWATER SOLUTIONS, Inc.
Storm Water Treatment Prototype "The ClearWater BMP"

November 25, 2003

Mirat Gurol, Ph.D.
Greg Loraine, Ph.D.
Dept. of Civil and Environmental Engineering

San Diego State University Summary A prototype of the CLEARWATER SOLUTIONS, INC. ClearWater BMP storm water retrofit filter was tested at the Environmental Engineering Laboratories at San Diego State University. The prototype was ¼ size of the full unit, but was tested at hydraulic retention times typical of precipitation events in southern California.

Two series of tests were run using two different synthetic storm water. The first tests were run using "Typical" storm water, which exhibited characteristics of real storm water, containing suspended solids in a wide size range, floating oil, and typical concentrations of dissolved metals. The prototype performed very well in these initial tests, so additional tests were done with a "Worst-case" storm water. The "Worst-case" storm water had primarily very fine suspended solids, emulsified oil, dissolved phosphorous, and high concentrations of dissolved and particulate metals. Total Suspended Solids (TSS) removal efficiency was determined at four flow rates. Empirical equations for removal of different size fractions were developed. The removal efficiencies for oil and grease, total phosphorous, copper, lead, and zinc, were measured at two flow rates. The effectiveness of the perlite-zeolite-activated carbon filter (media filter) was also tested.Using the "Typical" storm water calculations at 0.2 inches (3,780 gallons) of rain per hour for an ordinary curb inlet, the ClearWater BMP performed very well. The unit achieved 97% removal of TSS (the EPA standard for Nonpoint Source Pollution in Coastal waters is 80% removal of TSS). Floatable oil and grease was removed with an efficiency of 86% (100% at 16gpm). Zinc was removed at the rate of 83%. Copper came in at 28% (52% at 16gpm). And, lead removal was at 81%. The mixed media filter did not improve TSS removal but did substantially enhance removal of oil and grease, and dissolved metals.

Table 10 compares the removal efficiency of the unit with and without the mixed media filter at flow rates equivalent to 64 gpm in the full size unit. The presence of the filter did not significantly increase TSS removal, even for the small size particles. However, the filter was able to capture emulsified O&G droplets that the oil sock missed. This indicates that adsorption to activated carbon present in the filter is an important removal mechanism for O&G removal. The most dramatic effect of the filter was seen in the removal of dissolved metals. In the "typical" storm water scenario where most of the particle associated metals were attached to fairly large particles, the effectiveness of the filter was not as apparent due to pre-settling. In the "worst-case" storm water scenario, where the metals were either soluble or attached to fine particles, no removal of the metals was achieved without the filter. The filter captured 56% of Zn, 33% Cu, and 14% of Pb. This indicates that the media filter is required to capture any dissolved metals.Table 10: Removal With and Without Mixed Media Filter at 64 gpm. *Click here to contact us for the entire report.

CLEARWATER SOLUTIONS, INC. ClearWater BMP storm water filter Preformance Test
Table 10: Removal With and Without Mixed Media Filter at 64gpm.

	"Typical" % Removal Filtered	"Typical" % Removal No Filter	"Worst-case" % Removal Filtered	"Worst-case" % Removal No Filter
TSS	97	96	65	64
O&G	86	78	38	0
Cu	28	49	33	0
Pb	81	78	14	0
Zn	83	85	56	0

County of San Diego

DEPARTMENT OF PUBLIC WORKS

JOHN L. SNYDER
DIRECTOR

5555 OVERLAND AVE, SUITE 2188
SAN DIEGO, CALIFORNIA 92123-1295

(858) 694-2212 FAX: (858) 268-0461
Web Site: sdcdpw.org

November 28, 2005

Stewart McClure
Clearwater Solutions, Inc.
2259 Lone Oak Lane
Vista, Ca 92084

Dear Mr. McClure:

CLEARWATER SOLUTION FOR USE IN THE COUNTY OF SAN DIEGO

The County of San Diego (County) has reviewed your inquiry regarding the approval of ClearWater Solution™ Best Management Practice (BMP) for use in the County of San Diego.

Since the County regulates the use of structural treatment control BMPs only in the unincorporated portions of the County, this response has no applicability to projects located within incorporated cities in the County. Furthermore, the County does not endorse this product.

After reviewing the information provided to the County, ClearWater Solution™ BMP shall be accepted for use as a structural treatment BMP under the category of filtration system. This decision is based on test results from San Diego State University.

Thank you for informing the County about your product. If you have any questions or need additional information, please contact Cid Tesoro, Flood Control Engineer, at (858) 694-3672, or e-mail at Cid.Tesoro@sdcounty.ca.gov.

Sincerely,

for CHANDRA L. WALLAR
Assistant Director

cc: Cid Tesoro (O326)

Curb Inlet Basket

Lifts Out Through Manhole

High Capacity
Patented

5 Year Warranty

For Grated Curb Inlet

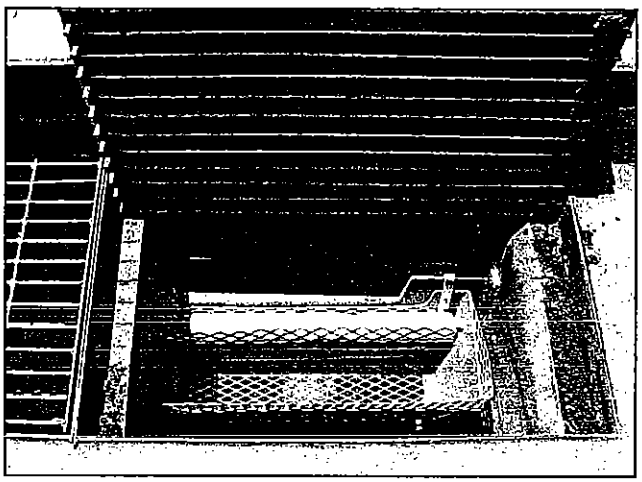

Shelf Basket Assembly
Basket Located Under Manhole

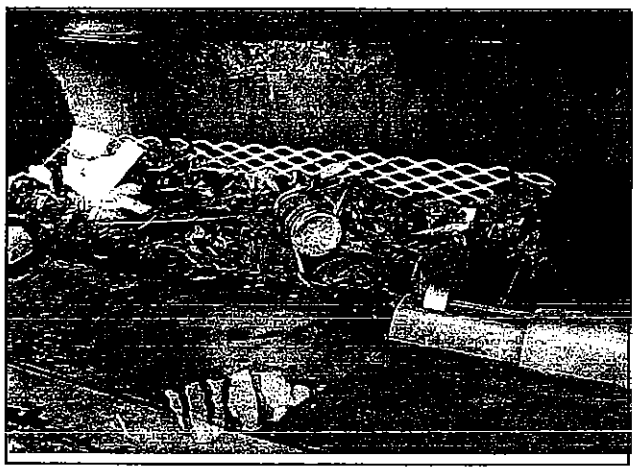

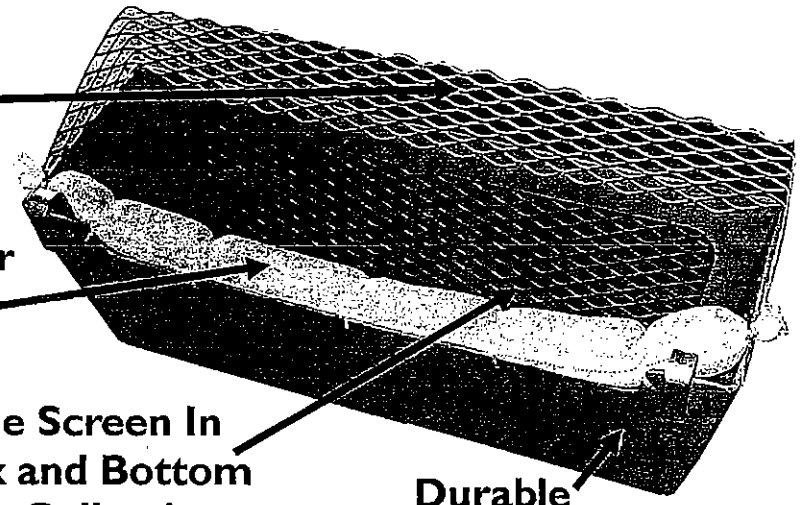

Built Strong To Last!

BIO CLEAN
ENVIRONMENTAL SERVICES, INC.™
Manufactured by Suntree Technologies

Curb Inlet Basket

Lifts Out Through Manhole

High Capacity
Patented

Multi-Stage Filtration

5 Year Warranty

Screens of Different
Sieve Sizes
Optimize Filtration
And Water Floe

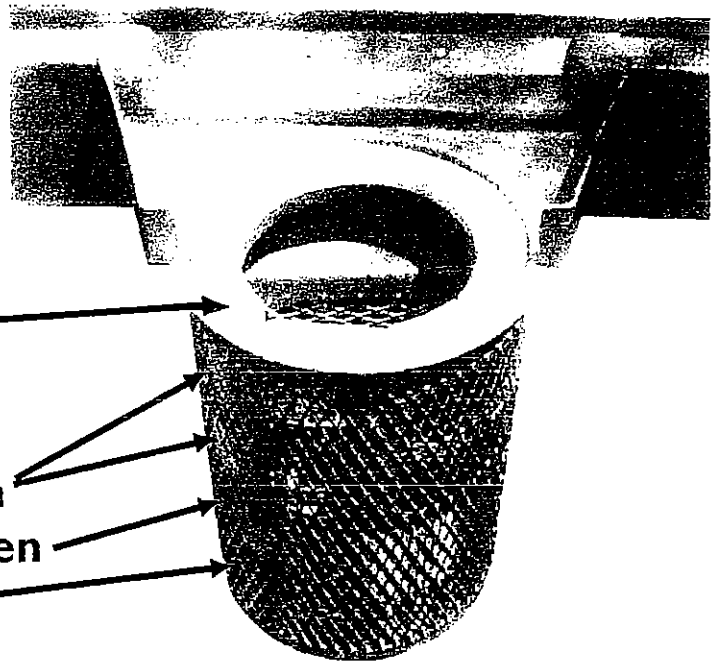

- **Storm Boom**
  Stainless Steel Screens
- **Coarse Sieve Size Screen**
- **Medium Sieve Size Screen**
- **Fine Sieve Size Screen**
  (Fine Sieve Size Screen Also on Bottom)

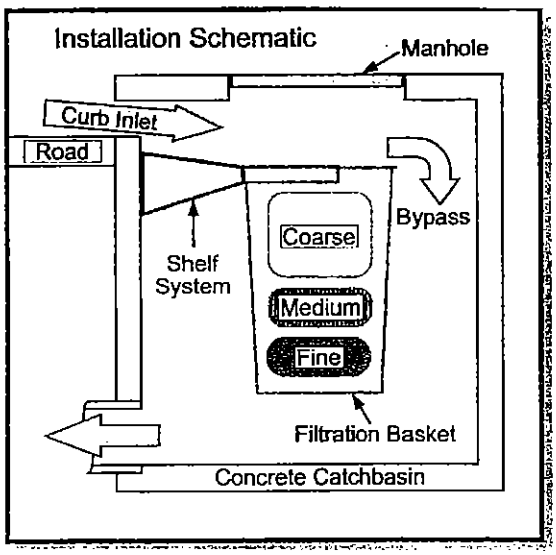

For use in inlet where the only access is through a manhole.

A shelf system directs water flow into the filtration basket and positions the basket directly under the manhole for easy access. If necessary, the water flows can bypass the entire filtration system simply by flowing past the filter into the catch basin.

BIO CLEAN
ENVIRONMENTAL SERVICES, INC.™
Manufactured by Suntree Technologies

ENVIRO-SAFE HIGH CAPACITY ROUND GRATE INLET SKIMMER
THE CURB SHELF BASKET WATER CLEANSING SYSTEM
HIGH CAPACITY CURB INLET BASKET

ROUND GISB FOR MOUNTING UNDER MANHOLE

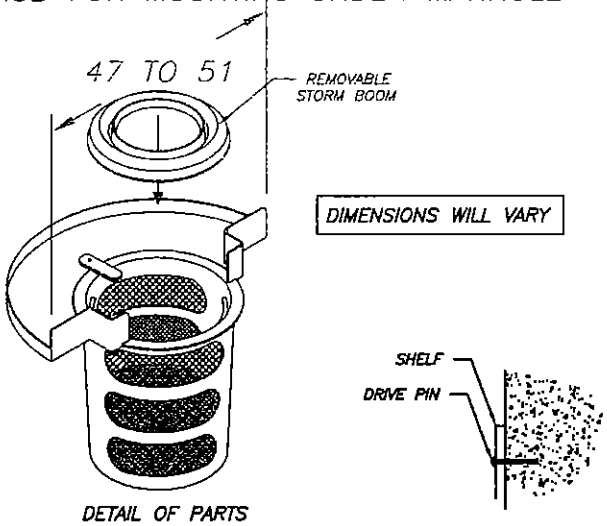

DETAIL OF PARTS
FIGURE 1

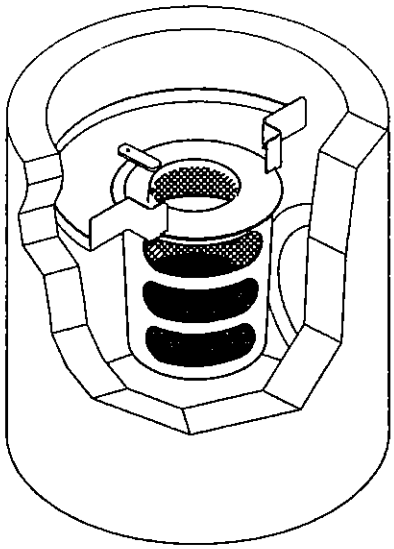

WIDTH OF INLET WILL VARY

FIGURE 2
DETAIL OF INSTALLATION

ROUND CANISTER IN CYLINDRICAL BASIN

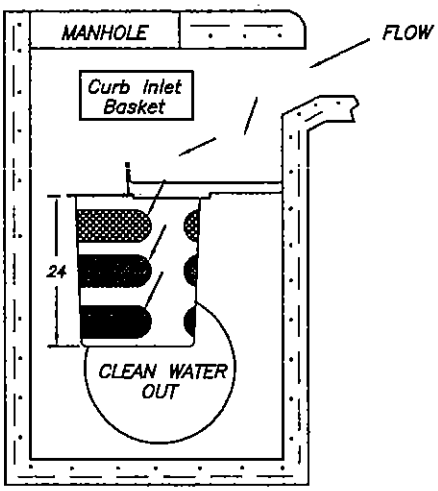

FIGURE 3
DETAIL OF PROCESS

REMOVABLE BASKET CATCHES EVERYTHING AND MAY BE REMOVED THROUGH MANHOLE WITHOUT ENTRY.

FLOW RATES per 3 FT. Basket				
$Q=SO*c_d*A\sqrt{2*g*h}$ c_d = coefficient of discharge = .67				
	SO	$A(ft^2)$	h (ft)	Q $(\frac{ft^3}{s})$
TOP SIDE	1	135.22	5.50	3.42
CENTER SIDE	.62	130.36	11.5	2.95
BOTTOM SIDE	.56	125.50	17.50	3.17
BOTTOM	.68	63.14	20.81	2.11
TOTAL				11.65

NOTES:

1. SHELF SYSTEM PROVIDES FOR ENTIRE COVERAGE OF INLET OPENING SO TO DIVERT ALL FLOW TO BASKET.
2. SHELF SYSTEM MANUFACTURED FROM MARINE GRADE FIBERGLASS,GEL COATED FOR UV PROTECTION.
3. SHELF SYSTEM ATTACHED TO THE CATCH BASIN WITH NON-CORROSIVE HARDWARE.
4. FILTRATION BASKET STRUCTURE MANUFACTURED OF MARINE GRADE FIBERGLASS,GEL COATED FOR UV PROTECTION.
5. FILTRATION BASKET FINE SCREEN AND COARSE CONTAINMENT SCREEN MANUFACTURED FROM STAINLESS STEEL.
6. FILTRATION BASKET HOLDS BOOM OF ABSORBENT MEDIA TO CAPTURE HYDROCARBONS. BOOM IS EASILY REPLACED WITHOUT REMOVING MOUNTING HARDWARE.
7. FILTRATION BASKET LOCATION IS DIRECTLY UNDER MANHOLE FOR EASY MAINTENANCE.

5 YEAR MANUFACTURERS WARRANTY

PATENTED

ALL FILTER SCREENS ARE STAINLESS STEEL

EXCLUSIVE CALIFORNIA DISTRIBUTOR:
BIO CLEAN ENVIRONMENTAL SERVICE
P.O. BOX 869, OCEANSIDE, CA. 92049
TEL. 760-433-7640 FAX:760-433-3176
Email: info@bioceanenvironmental.net

SUNTREE QUALITY PRODUCTS ARE BUILT FOR EASY CLEANING AND ARE DESIGNED TO BE PERMANENT INFRASTRUCTURE AND SHOULD LAST FOR DECADES.

SUNTREE TECHNOLOGIES
798 CLEARLAKE RD. SUITE #2
COCOA FL. 32922
TEL. 321-637-7552 FAX 321-637-7554

CURB INLET BASKET SYSTEM

DATE: 04/12/04	SCALE:SF = 15	PROJECT:	
DRAFTER: N.R.B.	UNITS =INCHES	REVISIONS:	DATE:

Part # GISB-I-24-24-25

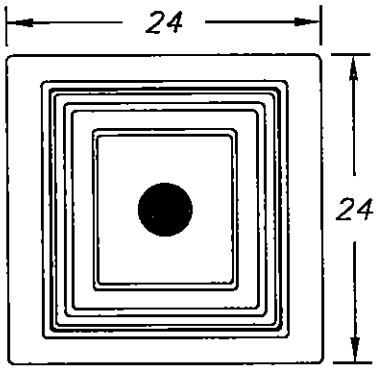

TOP VIEW

Flow Specifications

Description of filter opening	Percent Open (Based on Screen Dimensions)	Total Square Inches per Unit	Square Inches of Total Unobstructed Openings	Flow Rate (Cubic Feet per Second)
Skimmer protected By-Pass	100%	162.3	162.3	6.7 cfs
Coarse Screen 3/4" x 1-3/4" stainless steel flattened expanded	62%	143.5	89.0	4.3cfs
Medium Screen 10x10 mesh stainless steel	56%	143.5	80.4	4.3cfs
Fine screen 14 x 18 mesh stainless steel	68%	156.1	106.1	6.3cfs

THROAT FLOW RATE	TREATED FLOW RATE
Total: 4.4 cfs	Total: 14.9cfs

FLOW RATES BASED ON UNOBSTRUCTED OPENINGS

FLOW SCHEMATIC

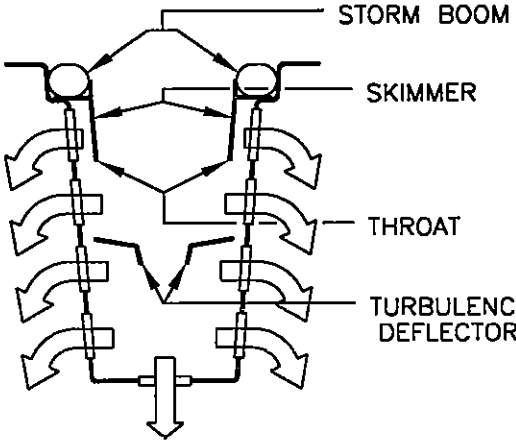

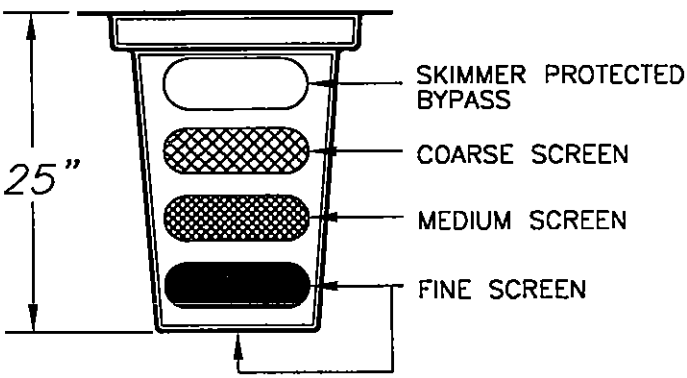

SIDE VIEW

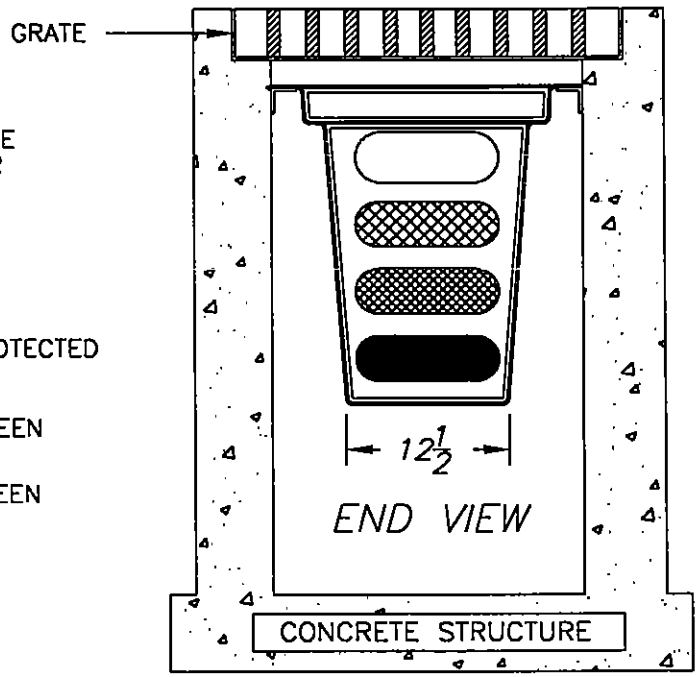

BOX MANUFACTURED FROM MARINE GRADE FIBERGLASS & GEL COATED FOR UV PROTECTION

5 YEAR MANUFACTURERS WARRANTY

PATENTED

ALL FILTER SCREENS ARE STAINLESS STEEL

MOUNT TO WALL BELOW GRATE WITH MOUNTING KIT CONSISTING OF ALUMINUM ANGLES, TAPCONS, AND DRILL BITS

MOUNTING KIT SOLD SEPARATELY

EXCLUSIVE CALIFORNIA DISTRIBUTOR:
BIO CLEAN ENVIRONMENTAL SERVICE
P.O. BOX 869, OCEANSIDE, CA. 92049
TEL. 760-433-7640 FAX:760-433-3176
Email: info@biocleanenvironmental.net

SUNTREE QUALITY PRODUCTS ARE BUILT FOR EASY CLEANING AND ARE DESIGNED TO BE PERMANENT INFRASTRUCTURE AND SHOULD LAST FOR DECADES.

SUNTREE TECHNOLOGIES
798 CLEARLAKE RD. SUITE #2
COCOA FL. 32922
TEL. 321-637-7552 FAX 321-637-7554

GRATE INLET SKIMMER BOX FOR FLORIDA DOT TYPE I INLET STRUCTURES.

DATE: 04/12/04	SCALE: SF = 15
DRAFTER: N.R.B.	UNITS = INCHES

PROJECT:

REVISIONS:	DATE:
REVISIONS:	DATE:
REVISIONS:	DATE:
REVISIONS:	DATE:
REVISIONS:	DATE:

CALIFORNIA CURB SHELF BASKET WATER CLEANSING SYSTEM
SAN DIEGO REGIONAL STANDARD CURB INLET

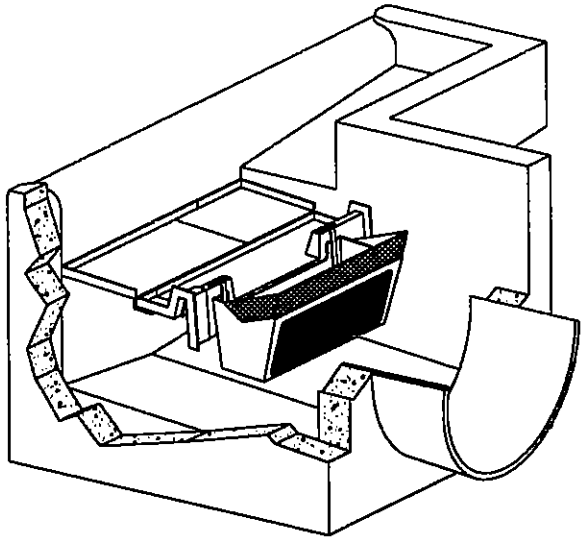

FIGURE 1
DETAIL OF PARTS

WIDTH OF INLET WILL VARY

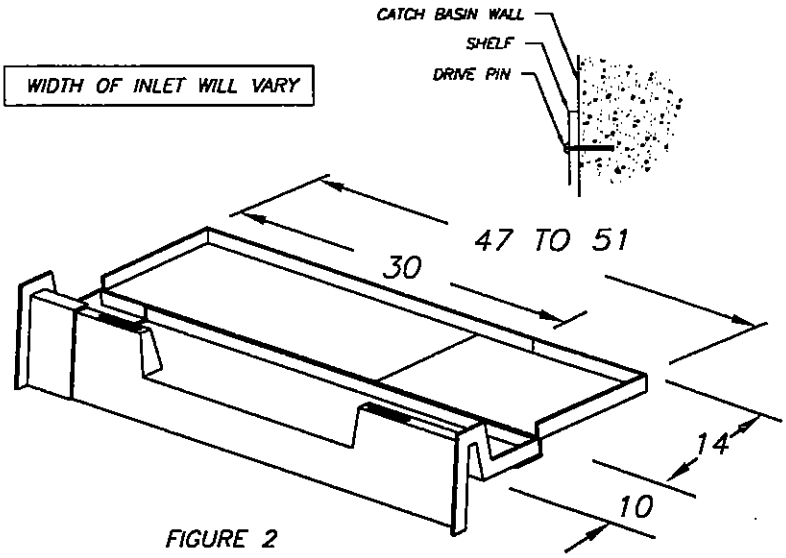

FIGURE 2
DETAIL OF INSTALLATION

REMOVABLE BASKET CATCHES EVERYTHING AND MAY BE REMOVED THROUGH MANHOLE WITHOUT ENTRY.

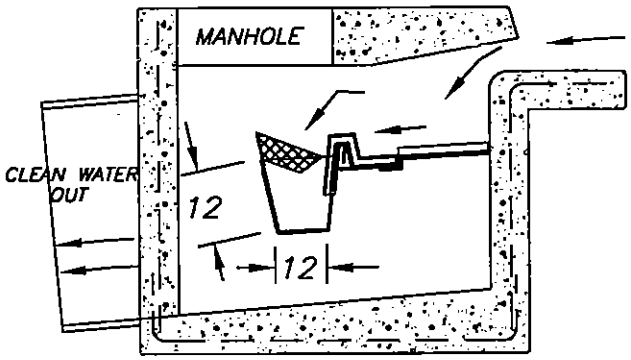

FIGURE 3
DETAIL OF PROCESS

FLOW RATES per 3 FT. Basket				
$Q=SO*c_d*A\sqrt{2*g*h}$ c_d = Coefficient of Discharge = .67				
	SO	$A(ft^2)$	h (ft)	Q $(\frac{ft^3}{s})$
Coarse Screen	.62	.84	0.146	1.06
Med Screen	.56	1.36	0.75	3.53
Fine Screen	.68	1.02	1.167	4.01
TOTAL				8.6

The above flow rates are based on unobstructed screens.

NOTES:

1. SHELF SYSTEM PROVIDES FOR ENTIRE COVERAGE OF INLET OPENING SO TO DIVERT ALL FLOW TO BASKET.
2. SHELF SYSTEM MANUFACTURED FROM MARINE GRADE FIBERGLASS,GEL COATED FOR UV PROTECTION.
3. SHELF SYSTEM ATTACHED TO THE CATCH BASIN WITH NON-CORROSIVE HARDWARE.
4. FILTRATION BASKET STRUCTURE MANUFACTURED OF MARINE GRADE FIBERGLASS,GEL COATED FOR UV PROTECTION.
5. FILTRATION BASKET FINE SCREEN AND COARSE CONTAINMENT SCREEN MANUFACTURED FROM STAINLESS STEEL.
6. FILTRATION BASKET HOLDS BOOM OF ABSORBENT MEDIA TO CAPTURE HYDROCARBONS. BOOM IS EASILY REPLACED WITHOUT REMOVING MOUNTING HARDWARE.
7. FILTRATION BASKET LOCATION IS DIRECTLY UNDER MANHOLE FOR EASY MAINTENANCE.

BOX MANUFACTURED FROM MARINE GRADE FIBERGLASS & GEL COATED FOR UV PROTECTION

5 YEAR MANUFACTURERS WARRANTY

PATENTED

ALL FILTER SCREENS ARE STAINLESS STEEL

EXCLUSIVE CALIFORNIA DISTRIBUTOR:
BIO CLEAN ENVIRONMENTAL SERVICE
P.O. BOX 869, OCEANSIDE, CA. 92049
TEL. 760-433-7640 FAX:760-433-3176
Email: info@biocleanenvironmental.net

SUNTREE QUALITY PRODUCTS ARE BUILT FOR EASY CLEANING AND ARE DESIGNED TO BE PERMANENT INFRASTRUCTURE AND SHOULD LAST FOR DECADES.

SUNTREE TECHNOLOGIES
798 CLEARLAKE RD. SUITE #2
COCOA FL. 32922
TEL. 321-637-7552 FAX 321-637-7554

CURB INLET BASKET SYSTEM

DATE: 04/12/04	SCALE:SF = 15
DRAFTER: N.R.B.	UNITS =INCHES

PROJECT:
REVISIONS: DATE:
REVISIONS: DATE:
REVISIONS: DATE:
REVISIONS: DATE:
REVISIONS: DATE:

LAB TEST RESULTS-RUNOFF WATER SAMPLES
COLLECTED AT **LONGO TOYOTA**
BETWEEN 09/23/02 AND 11/07/02
(BIO CLEAN FILTERS)
TESTING BY **ABN ENV. LABS.**, SOUTH EL MONTE, CA

No.	POLLUTANT	DETECTION LIMIT	TEST 1 NO FILTER	TEST 2 AFTER 1 WEEK W/FILTER	TEST 3 AFTER 3 WEEKS W/FILTER	TEST 4 AFTER 5 WEEKS W/FILTER
		mg/l	mg/l	mg/l	mg/l	mg/l
1	OIL & GREASE	2.70	199.00	< 2.7	20.00	8.60
2	SOAP	17.00	102.00	165.00	151.00	106.00
3	CHROMIUM	0.05	0.47	< 0.05	< 0.05	< 0.05
4	LEAD	0.10	1.50	0.40	< 0.10	< 0.10
5	COPPER	0.05	1.90	0.13	0.06	0.11
6	IRON	0.05	218.00	3.70	1.83	1.25
7	ALUMINUM	0.20	103.00	1.99	1.20	0.80
8	ZINC	0.10	13.70	1.10	0.34	0.76
9	NICKEL	0.10	0.70	0.30	< 0.10	0.15

November 18, 2002

BIO CLEAN ENVIRONMENTAL SERVICES INC
STORMWATER FILTRATION SYSTEMS
(760) 433-7640 FAX (760) 433-3176
SALES λ SERVICE λ INFORMATION

Bio-Sorb

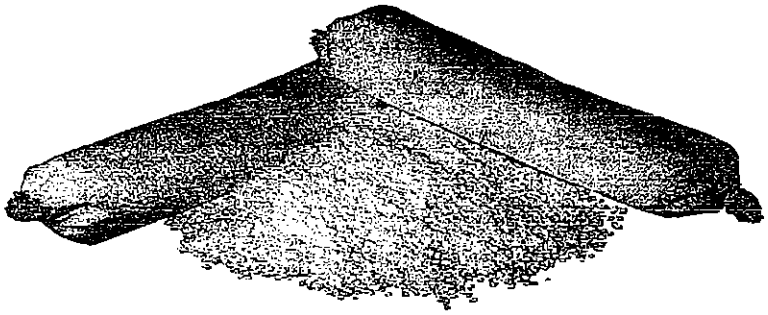

Oil Absorbing Polymers

Our Bio-Sorb oil absorbing polymers are uniquely formulated to clean up...

- Spills
- Chemical Spills
- Fuel Oil Spills
- Diesel Oil Spills

Control and absorb oil and hydrocarbons on any surface – including water

- Control oil spills and slicks in harbor and dock areas
- Control oil contamination in municipal run-off
- Remove oil contamination from plant process water
- Clean-up fuel spills on highways
- Absorb hydrocarbon vapors and fumes

	TIME (seconds)	% Uptake	C
0	0.00	0.0000	
1	30.0	104.00	
2	60.0	107.00	
3	120	128.00	
4	180	155.00	
5	240	164.00	
6	300	188.00	

How Are Bio-Sorb Oil Absorbing Polymers Unique?

Bio-Sorb oil absorbing polymers function by first attracting hydrocarbons to the surface of the polymer to adsorb the liquid, followed immediately by internally absorbing the media into its structure. Bio-Sorb oil absorbing polymers will not absorb water, which lends the material a unique usefulness for separating and collecting hydrocarbons from water mixtures. Most notably, the polymer can commonly absorb from 20% to 200% or more of its own weight of chemical or petroleum derived liquids. Furthermore, because of the unique absorption characteristic of the material, Bio-Sorb becomes dry to the touch shortly after sorption.

For What Applications May Biosorb Oil Absorbing Polymers be Useful?

Potential applications for Bio-Sorb hydrocarbon absorbing materials are numerous as a result of their unique nature. One can imagine applications for commercial, industrial, defense and ecological markets.

- Stormwater Filters
- Concentrate Carrier Material for Liquid Additives
- Removing Oil or Chemicals from Contaminated Water Streams or Water/Soil Slurries
- Industrial Work Area Collection Mats
- Spill Containment and Collection
- Odor Barrier/Collector for Flavor Oils and Fragrances
- Collection of Volatile Organic Compounds (VOC's)
- Many Others

BIO CLEAN
ENVIRONMENTAL SERVICES, INC.

P.O. BOX 869
OCEANSIDE, CA

www.biocleanenviornmental.net

PHONE: 760.433.7640
FAX: 760.433.3176

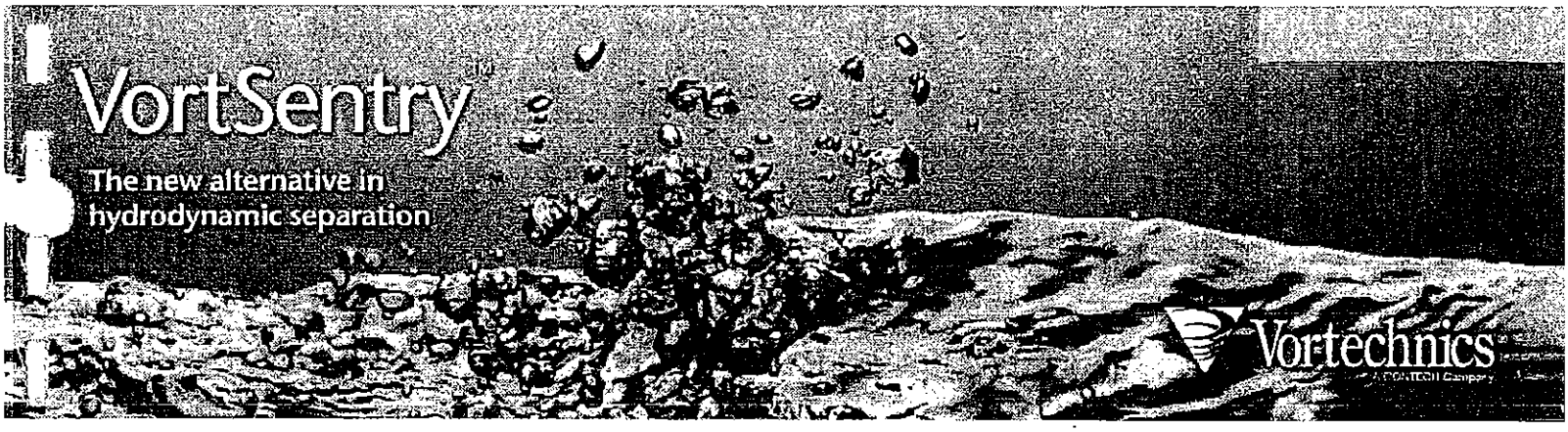

Vortechnics knows that no two stormwater projects are alike.

That's why we are introducing VortSentry,™ a new, engineered solution for the effective removal of sediment and free-floating pollutants from urban runoff. Custom designed to meet specific regulatory requirements, the VortSentry™ is another way Vortechnics is demonstrating its commitment to provide site-specific stormwater solutions backed by the industry's best customer service and unparalleled technical support.

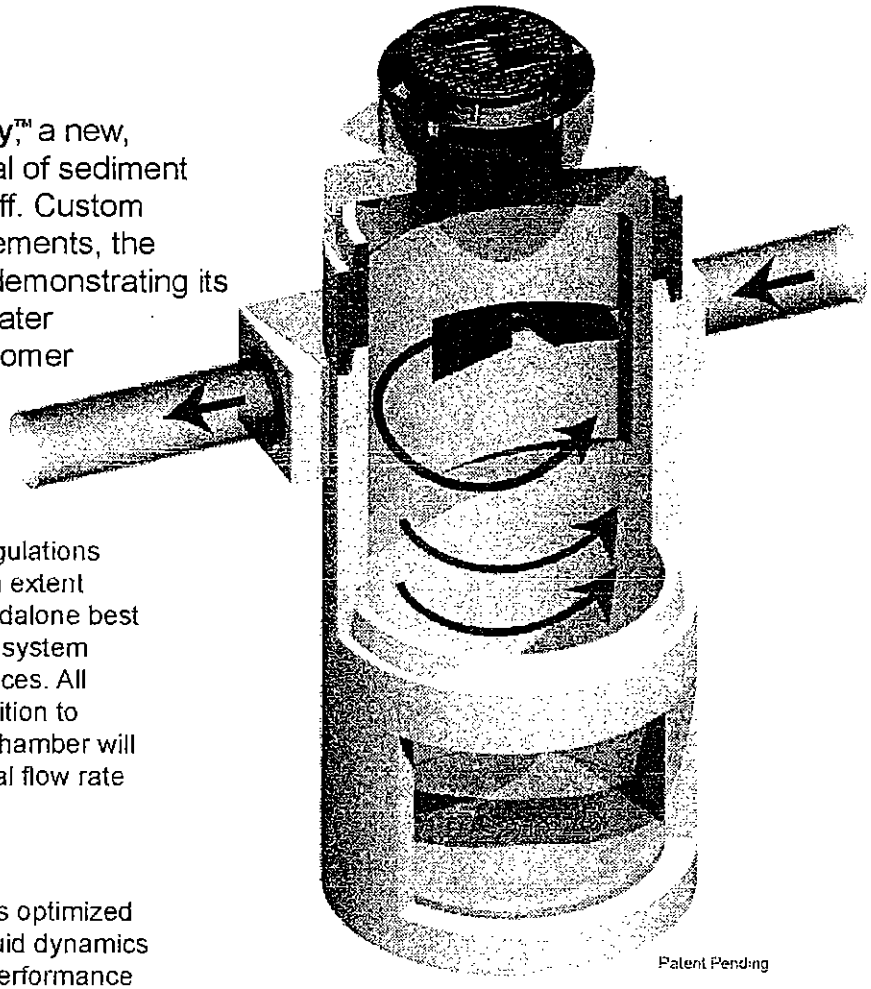

Patent Pending

Effective Best Management Practice

Ideally suited for applications where stormwater regulations require that pollutants are reduced to the maximum extent practicable, the VortSentry™ can be used as a standalone best management practice (BMP) or as a pre-treatment system in conjunction with other stormwater treatment devices. All VortSentry™ models are configured with a flow partition to ensure that the rate of flow through the treatment chamber will not cause pollutant re-entrainment, even as the total flow rate through the system increases.

New Lab-Tested Technology

The sizing and performance of the VortSentry™ was optimized through a combination of rigorous computational fluid dynamics (CFD) modeling and full-scale laboratory testing. Performance data gathered through extensive laboratory testing with fine silica particles (>53 to 250 microns in diameter) provides a solid baseline for sizing the VortSentry™ to meet specific regional requirements. Net annual removal efficiencies can be estimated based on a discrete particle size or for a gradation of particles within that range.

Easy to Install & Maintain

The VortSentry™ features a round concrete manhole structure for easy installation (often without the use of a crane) and unobstructed maintenance access. With its small footprint, the VortSentry™ is ideal for tight sites and retrofits.

VortSentry™ at a Glance

- Round, lightweight construction offers easy installation
- Compact design ideal for congested sites
- Backed by full-scale laboratory testing
- Capable of diverting high flows without pollutant washout
- Unobstructed access and no moving parts ensures easy maintenance

Learn More! Call 877.907.8676 or visit us at www.vortechnics.com

Committed to Clean Water™

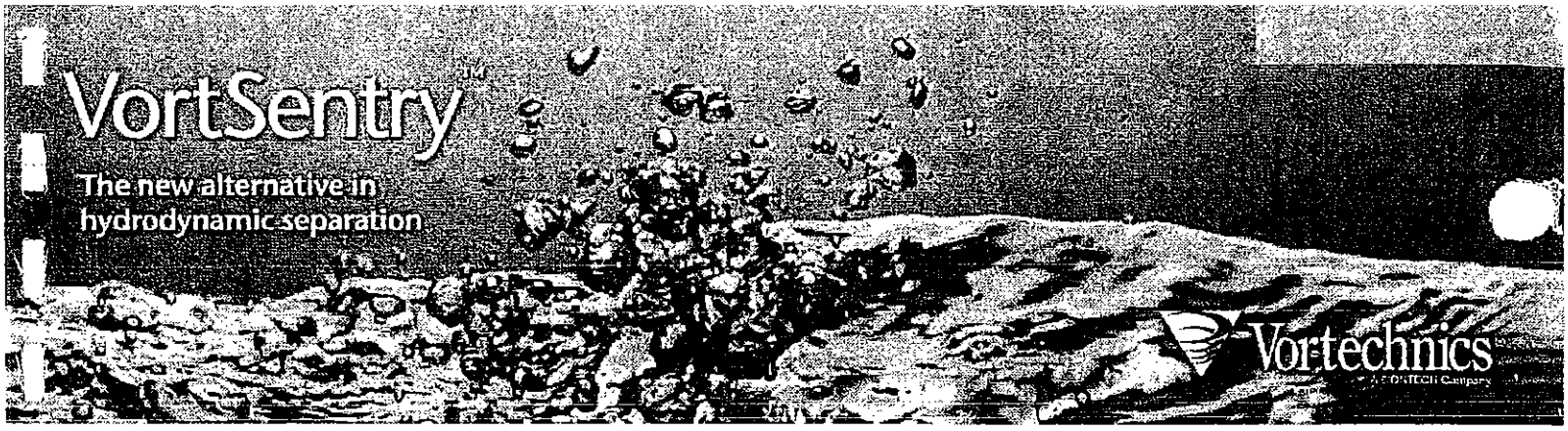

The VortSentry™ effectively captures pollutants from stormwater runoff.

1. Inlet
Stormwater runoff is conveyed into the unit through the inlet pipe.

2. Inlet Aperture
At low flow rates, all runoff is directed through the inlet aperture where it enters the treatment chamber tangentially.

3. Treatment Chamber
Gravitational separation of floating and sinking pollutants is enhanced by the gentle swirling motion in the treatment chamber, which causes the settleable solids to sink and form a conical pile in the storage sump.

4. Treatment Chamber Baffle
Trash, hydrocarbons and other floating debris are retained in the treatment chamber by the baffle wall, which extends below the resting water surface elevation.

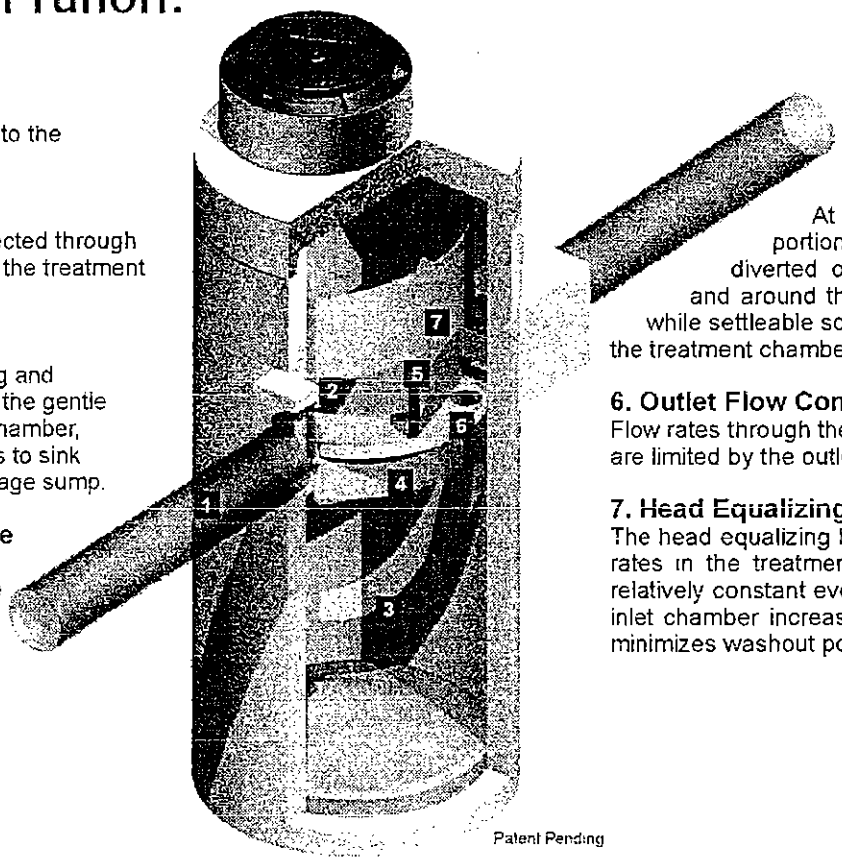

Patent Pending

5. Flow Partition
At higher flow rates, a portion of the runoff will be diverted over the flow partition and around the treatment chamber, while settleable solids are directed into the treatment chamber.

6. Outlet Flow Control
Flow rates through the treatment chamber are limited by the outlet flow control orifice.

7. Head Equalizing Baffle
The head equalizing baffle allows operating rates in the treatment chamber to remain relatively constant even as flow rates in the inlet chamber increase substantially, which minimizes washout potential.

VortSentry™ Models & Dimensions

Model	Diameter		Depth (below invert)		Recommended Maxiumum Inlet / Outlet Pipe Size*	
	ft	mm	ft	m	in	mm
VS30	3	900	5.4	1.7	12	300
VS40	4	1,200	6.5	2.0	18	450
VS50	5	1,500	7.4	2.3	18	450
VS60	6	1,800	8.3	2.5	24	600
VS70	7	2,100	9.1	2.8	30	762
VS80	8	2,400	10.1	3.0	30	762

*Note: To ensure that the most appropriate VortSentry™ model size is selected, please contact a Vortechnics representative.

VortSentry® Performance: Full-Scale Laboratory Test Results

Removal efficiency data for the VortSentry® was collected using a full-scale VortSentry VS40 configured without the standard three-foot (0.9 m) sediment storage sump. This configuration simulates operating conditions in a system that is operating with 100 percnet of its sediment storage capacity consumed. Testing the system in this manner produces a conservative estimate of system performance, since the addition of a three-foot (0.9 m) sump would decrease internal velocities, increase system residence time and presumably lead to improved removal efficiencies. The result is that systems in the field that are sized based on this data can be expected to consistently achieve equivalent or higher removal efficiencies for similarly sized material.

VS40 Removal Efficiencies for 110-micron Sediment Particles

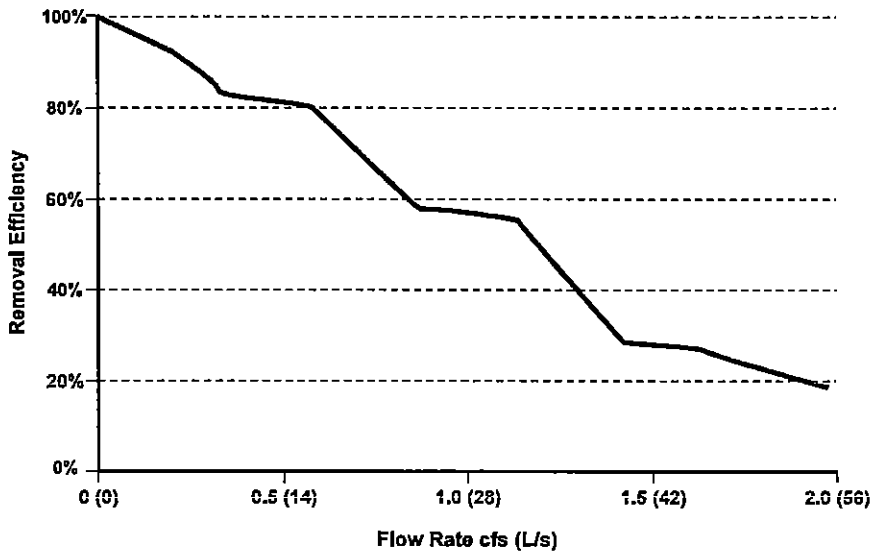

Figure 1

Laboratory testing of the VortSentry was conducted using OK–110, a pure silica sample with an average particle size of 110-microns. This material was metered into the four-foot diameter VortSentry at an average concentration of 110 mg/L at flow rates ranging from 0.2-cfs to 2.0-cfs (6 l/s to 56 l/s). Removal efficiencies at each flow rate were calculated based on net sediment loads passing the influent and effluent sampling points. Results are illustrated in Figure 1, below. The laboratory testing protocol followed during these tests is summarized on the following page.

Flow through the VortSentry may pass entirely through the treatment chamber or a portion of the flow may be diverted around treatment, depending on the water surface elevation in the inlet chamber. All flow passes through the treatment chamber at flow rates lower than 0.6-cfs (17 l/s) in the laboratory model. The flow partition directs a portion of the flow into treatment and the remainder is diverted in the head equalization chamber at influent flow rates higher than 0.6-cfs (0.7 l/s).

Runoff pooling in the head equalization chamber suppresses the rate of flow through the treatment chamber by reducing the head on the treatment chamber orifice. The result is that even as total flow rates through the VortSentry increase dramatically, flow rates through the treatment chamber remain relatively constant. Removal efficiencies through the treatment chamber also remain high and the risk of re-suspension is minimal.

Assuming that sediment in the inlet chamber is ideally mixed, removal rates through the system will decay according to the percentage of flow bypassed. This effect has been observed in the laboratory where the test system is designed to produce a thoroughly mixed inlet stream.

All VortSentry models have the same aspect ratio regardless of system diameter (i.e. an increase in diameter results in

VSTB1.2.01.06 © CONTECH Stormwater Solutions 2006

a corresponding increase in depth). Operating rates are expressed volumetrically. Removal efficiency at each operating rate is calculated according to the average of volumetric and Froude scaling methods and is described by equation 1.

Equation 1 and actual laboratory test results were used to determine the flow rate which would be required for the various VortSentry models to remove 80 percent TSS.

Equation 1: $$\left(\frac{\text{Diameter Prototype}}{\text{Diameter Model}}\right)^{2.75} = \left(\frac{\text{Flow Rate Prototype}}{\text{Flow Rate Model}}\right)$$

Laboratory Quality Control Brief

The following protocol describes the operating procedures used to obtain the data included in Figure 1.

Sediment Source

The sediment used in the performance tests described in this paper was OK-110, a pure silica product available through U.S. Silica Company. The specific gravity is 2.65 and the particle size distribution is as described in Table 1.

U.S. Silica OK-110 Particle Size Distribution		
Particle Size		Cumulative Passing
USA Standard Sieve Size	Micron	
70	212	99.8%
100	150	98.8%
120	125	83.8%
140	106	43%
170	88	18%
200	75	3%

Table 1

Flow Measurement and Regulation

Flow through the VortSentry™ is measured by an Isco 4250 area-velocity flow meter with a low profile flow sensor. Flow is regulated by a 12-inch (300 mm) butterfly valve located upstream of the VortSentry™. In order to simulate field conditions, flow rates are changed gradually to avoid flow surges through the system. Before sediment metering is initiated, the system is stabilized at the design flow rate for a minimum of five minutes.

Sediment Metering

All sediment is injected into the inlet pipe via a ¼ inch (6 mm) flexible tube using a Watson Marlow 5058 peristaltic metering pump. OK-110 sediment and water are combined in approximately a ½ pound/gallon ratio in a holding tank and homogenized by a mixing propeller powered by a ⅓ horsepower motor. The mixer is activated before the flow control valve is opened and runs continuously throughout the test. The metering pump is activated once the system has been stabilized at the target flow rate for at least five minutes. The pump is run continuously until the last effluent sample is taken.

Sample Collection

All influent samples are taken from a six-inch (150 mm) gate valve located upstream of the VortSentry™. A collection bin housing a 500-mL sample container is positioned beneath the valve. Immediately before each sample is taken, the valve is quickly opened and closed to eliminate any interference from particles that have settled in the low velocity region of the gate. This eliminates artificially high influent readings. Influent samples are taken after a minimum of three detention

VSTB1.2.01.06 © CONTECH Stormwater Solutions 2006

times have passed from the time that the metering pump is initiated. The time of each influent sample is recorded, and then the corresponding effluent sample is collected after the detention time. Effluent grab samples are collected at the discharge pipe, by sweeping the mouth of a 500-mL bottle through the exiting flow stream. Samples are annotated and refrigerated or immediately analyzed.

Background Concentrations

The CONTECH Stormwater Solutions Inc. laboratory test system recirculates water throughout each test. Initially water is stored in a 6000-gallon (22710 L) supply tank. Once the flow control valve is opened, water flows through a 12-inch (300 mm) pipe into the test tank. Upon exiting the test tank, effluent is held in a catch tank until it is pumped back into the supply tank.

In the event that sediment passes through the VortSentry™, it is important to stop it from recirculating through the test system. Two silt fences are installed in the catch tank to prevent this from happening. To account for sediment that also passes through the silt fences, grab samples are taken from the supply tank at a point near the mouth of the pipe leading to the VortSentry™. The concentration of these background samples is subtracted from the influent and effluent sample concentrations. Typical background concentrations are between 0 and 5 mg/L.

Sample Analysis

TSS samples are analyzed in the CONTECH Stormwater Solutions laboratory, following EPA method 160.2, a method for the measurement of total non-filterable solids. Volume measurements are accurate to 0.6-mL using a 500-mL graduated cylinder. An Acculab V-1 analytical balance with a readability of 0.001 g is used to measure mass.

VSTB1,2,01.06 © CONTECH Stormwater Solutions 2006

7

ATTACHMENT F

OPERATION AND MAINTENANCE PROGRAM FOR TREATMENT BMP

*(**NOTE:** INFORMATION REGARDING OPERATION AND MAINTENANCE CAN BE OBTAINED FROM THE FOLLOWING WEB SITE: HTTP://WWW.SDCOUNTY.CA.GOV/DPW/WATERSHEDS/LAND_DEV/SUSMP.HTML.)*

OPERATIONS AND MAINTENANCE PROGRAM

The operation and maintenance requirements for each type of BMP are as follows:):

F-1 Detention Basin (DB)

The operational and maintenance needs of a DB are:

- Dispersion of alluvial sediment deposition at inlet structures thus limiting the extended localized ponding of water.
- Periodic sediment removal in accordance with the 18" depth threshold or 10% of the storage volume (which ever is less).
- Monitoring of the basin to ensure it is completely and properly drained.
- Outlet riser cleaning. Vegetation management to prevent marsh vegetation from taking hold, and to limit habitat for disease-carrying fauna.
- Removal of graffiti, grass trimmings, weeds, tree pruning, leaves, litter, and debris.
- Preventative maintenance on monitoring equipment.
- Vegetative stabilization of eroding banks and basal areas.

Inspection Frequency
The facility will be inspected and inspection visits will be completely documented:

- Once a month at a minimum.
- After every large storm (after every storm monitored or those storms with more than 0.50 inch of precipitation).
- On a weekly basis during extended periods of wet weather.

Aesthetic and Functional Maintenance
Functional maintenance is important for performance and safety reasons. Aesthetic maintenance is important for public acceptance of stormwater facilities.

Aesthetic Maintenance
The following activities will be included in the aesthetic maintenance program:

- Graffiti Removal. Graffiti will be removed in a timely manner to improve the appearance of a DB, and to discourage additional graffiti or other acts of vandalism. Graffiti removal methods/materials will be controlled or restricted to avoid related water quality concerns; no potential pollutants will be utilized as solvents (if used, solvents must not come in contact with storm water and must be completely removed from the site during the maintenance period).
- Grass Trimming. Trimming of grass will be done around fences, the basin, outlet structures, and sampling structures.
- Weed Control. Weeds will be removed through mechanical means.

Functional Maintenance
Functional maintenance has two components:

- Preventive maintenance.
- Corrective maintenance.

Preventive Maintenance

Preventive maintenance that will be done on a regular basis. Preventive maintenance activities to be instituted at a DB are:

- *Mowing.* Vegetation in the DB will be kept at the average maximum height of 18 inches to prevent the establishment of marsh vegetation, the stagnation of water, and the development of faunal habitats.
- *Trash and Debris.* During each inspection and maintenance visit to the site, debris and trash removal will be conducted to reduce the potential for inlet and outlet structures and other components from becoming clogged and inoperable during storm events.
- *Sediment Management.* Alluvial deposits at the inlet structures may create zones of ponded water. Upon these occurrences these deposits will be graded within the DB in an effort to maintain the functionality of the BMP. Sediment grading will be accomplished by manually raking the deposits.
- *Sediment Removal.* Surface sediments will be removed when sediment accumulation is greater than 18 inches, or 10 percent of the basin volume, whichever is less. Vegetation removed with any surface sediment excavation activities will be replaced through reseeding. Disposal of sediments will comply with applicable local, county, state, or federal requirements.
- *Mechanical Components.* Regularly scheduled maintenance will be performed on valves, fence gates, locks, and access hatches in accordance with the manufacturers' recommendations. Mechanical components will be operated during each maintenance inspection to assure continued performance.
- *Elimination of Mosquito Breeding Habitats.* The most effective mosquito control program is one that eliminates potential breeding habitats.

Corrective Maintenance

Corrective maintenance is required on an emergency or non-routine basis to correct problems and to restore the intended operation and safe function of a DB. Corrective maintenance activities include:

- *Removal of Debris and Sediment.* Sediment, debris, and trash, which threaten the ability of a DB to store or convey water, will be removed immediately and properly disposed of.
- *Structural Repairs.* Repairs to any structural component of a DB will be made promptly (e.g., within 10 working days). Designers and contractors will conduct repairs where structural damage has occurred.
- *Embankment and Slope Repairs.* Damage to the embankments and slopes will be repaired quickly (e.g., within 10 working days).
- *Erosion Repair.* Where a reseeding program has been ineffective, or where other factors have created erosive conditions (i.e., pedestrian traffic, concentrated flow, etc.), corrective steps will be taken to prevent loss of soil and any subsequent danger to the performance of a DB. There are a number of corrective actions that can be taken. These include erosion

control blankets, riprap, sodding, or reduced flow through the area. Design engineers will be consulted to address erosion problems if the solution is not evident.

- *Fence Repair.* Timely repair of fences (e.g., within 10 working days) will be done to maintain the security of the site.
- *Elimination of Trees and Woody Vegetation.* Woody vegetation will be removed from embankments.
- *Elimination of Animal Burrows.* Animal burrows will be filled and steps taken to remove the animals if burrowing problems continue to occur (filling and compacting). If the problem persists, vector control specialists will be consulted regarding removal steps. This consulting is necessary as the threat of rabies in some areas may necessitate the animals being destroyed rather than relocated.
- *General Facility Maintenance.* In addition to the above elements of corrective maintenance, general corrective maintenance will address the overall facility and its associated components. If corrective maintenance is being done to one component, other components will be inspected to see if maintenance is needed.

Maintenance Frequency

The maintenance indicator document, included as Appendix B, lists the schedule of maintenance activities to be implemented at a pilot DB.

Debris and Sediment Disposal

All waste shall be disposed of offsite in accordance with local, State and Federal regulations. Interim storage of these wastes shall be in accordance specifications provided in the SWPPP.

The following is a list of approved disposal sites:

Non-Hazardous Waste
Miramar Landfill 619-573-1418
5180 Convoy Street
San Diego, CA

Hazardous Waste (i.e., Gas, Oil, Chemicals, etc.)
Appropriate Technologies II/B.K.K. (619) 421-1175
1700 Maxwell Road
Chula Vista, CA 91911

No transport vehicle may carry more than five gallons or 50 pounds of hazardous waste at one time. An Environmental Protection Agency identification number must be obtained prior to transporting material. The above site will not accept waste without this number. The contractor shall contact The Department of Health Services at (916) 324-1781 to obtain a temporary EPA ID number. Hazardous wastes may be hauled in larger quantities by licensed hazardous waste transporters. For a complete list of County of San Diego Hazardous Waste Requirements and waste transporters see Section 18 within the SWPPP, References. Any additional questions regarding the disposal of hazardous waste shall be directed to County of San Diego Hazardous Materials Management Division at (619) 338-2222.

Hazardous Wastes

Suspected hazardous waste will be analyzed to determine disposal options. Hazardous materials generated on site will be handled and disposed of according to local, state, and

federal regulations. A solid or liquid waste is considered a hazardous waste if it exceeds the criteria listed in the California Code of Federal Regulations, Title 22, Article 11 (State of California, 1985).

F-2 Curb Inlet Filtration (CLEARWATER)

The operational and maintenance needs of Clearwater Curb Inlet Filtration Units are:

- Removal of accumulated materials with a vacuum truck
- Replacement of adsorbent boom and media filter
- Inspection of the unit to ensure that it is functioning properly

Inspection Frequency

Each unit will be inspected and inspection visits will be completely documented:

- After every runoff event for the first 90 days
- Once every 60 days during the rainfall season
- At the end of the rainfall season

After the first year, inspection frequencies may be modified based on pollutant accumulation and the specific maintenance needs of each filtration unit. The manufacture will provide inspection criteria during installation. A typical inspection program is identified below.

Functional Maintenance

Functional maintenance has two components:

1. Preventive maintenance
2. Corrective maintenance

Maintenance requirements are specific to the manufacturer. The manufacture will provide maintenance criteria during installation. A typical maintenance program is identified below.

Preventive Maintenance

Preventive maintenance activities to be instituted for debris separation are:

- *Trash and Debris Removal.* Trash and Debris accumulation, as part of the operation and maintenance program of the Clearwater unit, will be monitored after every large storm event, and cleaned out at least twice per year.
- *Sediment Removal.* Sediment accumulation, as part of the operation and maintenance program of the Clearwater unit, will be monitored after every large storm event, and cleaned out at least twice per year.
- *Media Filter Replacement.* Replace media filter per manufacturer's criteria.

Vector Control

As indicated in the attached manufacturer's information, vector control is not a problem with the Clearwater unit. The unit has been designed to slowly drain out the bottom so no standing water remains after a storm event.

Corrective Maintenance

Corrective maintenance is required on an emergency or non-routine basis to correct problems and to restore the intended operation and safe function of a Clearwater unit. Corrective maintenance activities include:

- Removal of Debris and Sediment. *Sediment, debris, and trash, which impede the functioning of a Clearwater unit will be removed and properly disposed.*

- Replacement. *Once deemed necessary. Qualified individuals (i.e., the manufacturer representatives) will conduct replacement if damage has occurred.*

Maintenance Frequency

Maintenance frequency is site dependant and at final engineering the manufacturer should be contacted for initial schedule and details. Maintenance activities will be performed per the manufacturer's requirements attached at the end of this section. Contact: CLEARWATER SOLUTIONS at 800-758-8817.

Debris and Sediment Disposal

See Section F-1 Detention Basin (DB) Debris and Sediment Disposal specifications

Hazardous Waste

Suspected hazardous wastes will be analyzed to determine disposal options. Hazardous wastes generated onsite will be handled and disposed of according to applicable local, state, and federal regulations. A solid or liquid waste is considered a hazardous waste if it exceeds the criteria list in the CCR, Title 22, Article 11.

F-3 Curb Inlet Inserts (BIOCLEAN)

The operational and maintenance needs of BIOCLEAN are:

- Removal of accumulated materials
- Replacement of filter "Storm Booms"

Inspection Frequency

The facility will be inspected and inspection visits will be completely documented:

- Quarterly
- On a weekly basis during extended periods of wet weather.

Inspection requirements are specific to the manufacturer. The manufacture will provide inspection criteria during installation. A typical inspection programs is identified below.

Functional Maintenance

Functional maintenance has two components:

1. Preventive maintenance
2. Corrective maintenance

Maintenance requirements are specific to the manufacturer. The manufacture will provide maintenance criteria during installation.

Preventive Maintenance

Preventive maintenance activities to be instituted for debris separation are:

- *Trash and Debris Removal.* Trash and Debris accumulation, as part of the operation and maintenance program of a BIOCLEAN, will be removed quarterly and after every large storm event. Trash and debris shall be removed.
- *Sediment Removal.* Sediment accumulation, as part of the operation and maintenance program of a BIOCLEAN, will be monitored quarterly. Sediment shall be removed.

- *Mechanical Components.* Regularly scheduled maintenance will be performed on basket inserts in accordance with the manufacturers' recommendations.
- *Adsorbent Boom Replacement.* Replace adsorbent boom per manufacturer's criteria.

Corrective Maintenance

Corrective maintenance is required on an emergency or non-routine basis to correct problems and to restore the intended operation and safe function of a BIOCLEAN. Corrective maintenance activities include:

- Removal of Debris and Sediment. Sediment, debris, and trash, which impede the hydraulic functioning of a BIOCLEAN will be removed and properly disposed. Temporary arrangements will be made for handling the sediments until a permanent arrangement is made.
- Replacement. Once deemed necessary. Qualified individuals will conduct replacement if damage has occurred.

Maintenance Frequency

Maintenance frequency is site dependant and at Final Engineering the manufacturer should be contacted for initial schedule and details. Contact: BIO CLEAN ENVIRONMENTAL SERVICES, Incorporated at 760-433-7640.

Debris and Sediment Disposal

See Section F-1 Detention Basin (DB) Debris and Sediment Disposal specifications

Hazardous Waste

Suspected hazardous wastes will be analyzed to determine disposal options. Hazardous wastes generated onsite will be handled and disposed of according to applicable local, state, and federal regulations. A solid or liquid waste is considered a hazardous waste if it exceeds the criteria list in the CCR, Title 22, Article 11.

F-4 Hydrodynamic Separators (VORTSENTRY)

The operational and maintenance needs of VORTSENTRY are:

- Removal of accumulated materials

Inspection Frequency

The facility will be inspected and inspection visits will be completely documented:

- Quarterly
- On a weekly basis during extended periods of wet weather.

Inspection requirements are specific to the manufacturer. The manufacture will provide inspection criteria during installation.

Functional Maintenance

Functional maintenance has two components:

1. Preventive maintenance
2. Corrective maintenance

Maintenance requirements are specific to the manufacturer. The manufacture will provide maintenance criteria during installation. A typical maintenance program is identified below.

Preventive Maintenance

Preventive maintenance activities to be instituted for debris separation are:

- *Trash and Debris Removal.* Trash and Debris accumulation, as part of the operation and maintenance program of a VORTSENTRY, will be removed quarterly and after every large storm event. Trash and debris shall be removed.
- *Sediment Removal.* Sediment accumulation, as part of the operation and maintenance program of a VORTSENTRY, will be monitored quarterly. The treatment sump should be cleaned out once sediment has accumulated to a depth of approximately 3 feet. The manufacturer recommends that sediment be removed with a vacuum truck.
- *Mechanical Components.* Regularly scheduled maintenance will be performed on the units in accordance with the manufacturers' recommendations.

Corrective Maintenance

Corrective maintenance is required on an emergency or non-routine basis to correct problems and to restore the intended operation and safe function of a VORTSENTRY. Corrective maintenance activities include:

- **Removal of Debris and Sediment.** Sediment, debris, and trash, which impede the functioning of a VORTSENTRY will be removed and properly disposed. Temporary arrangements will be made for handling the sediments until a permanent arrangement is made.
- **Replacement.** Once deemed necessary. Qualified individuals will conduct replacement if damage has occurred.

Maintenance Frequency

Maintenance frequency is site dependant and at Final Engineering the manufacturer should be contacted for initial schedule and details. Contact: VORTECHNICS, Incorporated at 877-907-8676.

Debris and Sediment Disposal

See Section F-1 Detention Basin (DB) Debris and Sediment Disposal specifications

Hazardous Waste

Suspected hazardous wastes will be analyzed to determine disposal options. Hazardous wastes generated onsite will be handled and disposed of according to applicable local, state, and federal regulations. A solid or liquid waste is considered a hazardous waste if it exceeds the criteria list in the CCR, Title 22, Article 11.

F-5 Bio-Filters

Bio-Filters proposed for Montecito Ranch are existing vegetated / sparsely vegetated open space drainage courses and act as a final filtering of project runoff after flows have been treated by the structural treatment facilities identified within Sections F-1 through F-4 above. No maintenance other than County ordered maintenance/clearing shall be done in existing "Open Space" areas. Although maintenance is not anticipated, if deemed necessary, the following guidelines may be adopted by the Assessment District for maintaining the existing Bio-Filters.

The following operational and maintenance needs of a Swale are:

- Vegetation management to maintain adequate hydraulic functioning and to limit habitat for disease-carrying animals.
- Animal and vector control.
- Periodic sediment removal to optimize performance.
- Grass trimmings, tree pruning, and leaf collection and removal to prevent obstruction of a Swale and monitoring equipment.
- Erosion and structural maintenance to prevent the loss of soil and maintain the performance of the Swale.

Inspection Frequency

The facility will be inspected and inspection visits will be completely documented:

- Annually
- After every large storm (after every storm monitored or those storms with more than 0.50 inch of precipitation.)
- On a weekly basis during extended periods of wet weather.
- Aesthetic and Functional Maintenance
- Aesthetic maintenance is important for public acceptance of stormwater facilities. Functional maintenance is important for performance and safety reasons.
- Both forms of maintenance will be combined into an overall Stormwater Management System Maintenance.

Aesthetic Maintenance

The following activities will be included in the aesthetic maintenance program:

- *Grass Trimming.* Trimming of grass will be done on the Swale, around fences, at the inlet and outlet structures, and sampling structures.
- *Weed Control.* Weeds will be removed through mechanical means. Herbicide will not be used because these chemicals may impact the water quality monitoring.

Functional Maintenance

Functional maintenance has two components:

- Preventive maintenance
- Corrective maintenance

Preventive Maintenance

Preventive maintenance activities to be instituted at a Swale are:

- *Grass Mowing.* Vegetation seed mix within the Swale is designed to be kept short to maintain adequate hydraulic functioning and to limit the development of faunal habitats.
- *Trash and Debris.* During each inspection and maintenance visit to the site, debris and trash removal will be conducted to reduce the potential for inlet and outlet structures and other components from becoming clogged and inoperable during storm events.
- *Elimination of Mosquito Breeding Habitats.* The most effective mosquito control program is one that eliminates potential breeding habitats.

Corrective Maintenance

Corrective maintenance is required on an emergency or non-routine basis to correct problems and to restore the intended operation and safe function of a Swale. Corrective maintenance activities include:

- Removal of Debris and Sediment. Sediment, debris, and trash, which impede the hydraulic functioning of a Swale and prevent vegetative growth, will be removed and properly disposed. Temporary arrangements will be made for handling the sediments until a permanent arrangement is made. Vegetation will be re-established after sediment removal.
- Structural Repairs. Once deemed necessary, repairs to structural components of a Swale and its inlet and outlet structures will be done within 10 working days. Qualified individuals (i.e., the designers or contractors) will conduct repairs where structural damage has occurred.
- Embankment and Slope Repairs. Once deemed necessary, damage to the embankments and slopes of Swales will be repaired within 10 working days.
- Erosion Repair. Where a reseeding program has been ineffective, or where other factors have created erosive conditions (i.e., pedestrian traffic, concentrated flow, etc.), corrective steps will be taken to prevent loss of soil and any subsequent danger to the performance of a Swale. There are a number of corrective actions than can be taken. These include erosion control blankets, riprap, sodding, or reduced flow through the area. Designers or contractors will be consulted to address erosion problems if the solution is not evident.
- Elimination of Animal Burrows. Animal burrows will be filled and steps taken to remove the animals if burrowing problems continue to occur (filling and compacting). If the problem persists, vector control specialists will be consulted regarding removal steps. This consulting is necessary as the threat of rabies in some areas may necessitate the animals being destroyed rather than relocated. If the BMP performance is affected, abatement will begin. Otherwise, abatement will be performed annually in September.
- General Facility Maintenance. In addition to the above elements of corrective maintenance, general corrective maintenance will address the overall facility and its associated components. If corrective maintenance is being done to one component, other components will be inspected to see if maintenance is needed.

Maintenance Frequency

The majority of Bio-Filtration will occur on the single-family lots prior to capture by the Public Storm Drain System, and down stream of the outlet structure of the DB (post treatment); outside the developed areas and outside project lands requiring resource protection. As such no maintenance frequency is recommended. See functional maintenance above.

Debris and Sediment Disposal

See Section F-1 Detention Basin (DB) Debris and Sediment Disposal specifications

Hazardous Waste

Suspected hazardous wastes will be analyzed to determine disposal options. Hazardous waste generated onsite will be handled and disposed of according to applicable local, state, and federal regulations. A solid or liquid waste is considered a hazardous waste if it exceeds the criteria listed in the CCR, Title 22, Article 11.

F-6 BMP's Maintenance Annual Cost Estimate:

A detailed cost estimate of the Post-Construction Structural BMP Maintenance will be developed during the Grading Plan and Improvement Plan Engineering. Since the project is in the preliminary development phase Sections F-4A through F-4C are only an initial estimate.

F-6A Detention Basin (DB)

Maintenance components include:

a) DB Inspection, detailed in Section F-1 and summarized as: once a month, after every large storm, on a weekly basis during extended periods of wet weather.
b) Mowing, Trash and Debris, Sediment Removal, Mechanical Components, Elimination of Mosquito Breeding Habitats.

Initial consultation with Environmental Maintenance Service Company D & D Landscape (619) 287-9311, incorporating items a & b above, annual service is estimated between $300.00 to $500.00 per acre of detention facility; currently the project proposes approximately ten acres for DBs.

ESTIMATED ANNUAL COST: $ 5,000.00 (initial estimate only, final cost to be determined at time of construction)

F-6B Curb Inlet Filtration Units (CLEARWATER)

Maintenance components include:

a) CLEARWATER Inspection, detailed in Section F-2, and summarized as: after every runoff event in the first 90 days, every 60 days during rainfall season, and once at the end of rainfall season.
b) Replacement of oil adsorbent boom and media filter at least twice a year.

Maintenance costs have been estimated utilizing County Appendix H Estimated O & M Costs for BMP Projects, cost for Inlet Inserts – Fossil Filter.

ESTIMATED ANNUAL COST: $ 21,301.20 [18 Clearwater units utilized ~ $1,183.40/unit] (initial estimate only, final cost to be determined at time of construction)

F-6C Curb Inlet Inserts (BIOCLEAN)

Maintenance components include:

a) BIOCLEAN Inspection, detailed in Section F-3, and summarized as: quarterly, after every large storm, on a weekly basis during extended periods of wet weather.
b) Annual replacement of oil adsorbent boom.

Maintenance costs have been estimated utilizing County Appendix H Estimated O & M Costs for BMP Projects, cost for Inlet Inserts – Fossil Filter.

ESTIMATED ANNUAL COST: $ 47,336.00 [40 filters utilized ~ $1,183.40/filter] (initial estimate only, final cost to be determined at time of construction)

F-6D Hydrodynamic Separator (VORTSENTRY)

Maintenance components include:

c) VORTSENTRY Inspection, detailed in Section F-4, and summarized as: quarterly, after every large storm, on a weekly basis during extended periods of wet weather.

d) Removal of accumulated sediment.

Maintenance costs have been estimated utilizing County Appendix H Estimated O & M Costs for BMP Projects, cost for Media Filter – Sand without Pump.

ESTIMATED ANNUAL COST: $ 27,265.80 [6 units utilized ~ $4,544.30/unit] (initial estimate only, final cost to be determined at time of construction)

F-6E Bio-Filters

ESTIMATED ANNUAL COST: No Annual Cost is anticipated; outside normal Grounds Maintenance. The majority of Bio-Filtration will be occurring on the single-family lots prior to capture by the Public Storm Drain System, down stream of the outlet structure of the DBs (post treatment), and down stream of the detention basins; outside the developed areas and outside project lands requiring resource protection. As such no maintenance will be required.

ATTACHMENT G

CERTIFICATION SHEET

This Stormwater Management Plan has been prepared under the direction of the following Registered Civil Engineer. The Registered Civil Engineer attests to the technical information contained herein and the engineering data upon which recommendations, conclusions, and decisions are based.

MARK E. STEVENS
R.C.E. 35502

01/18/08
DATE

REGISTERED PROFESSIONAL ENGINEER
MARK E. STEVENS
C 35502
EXP. 9-30-09
CIVIL
STATE OF CALIFORNIA