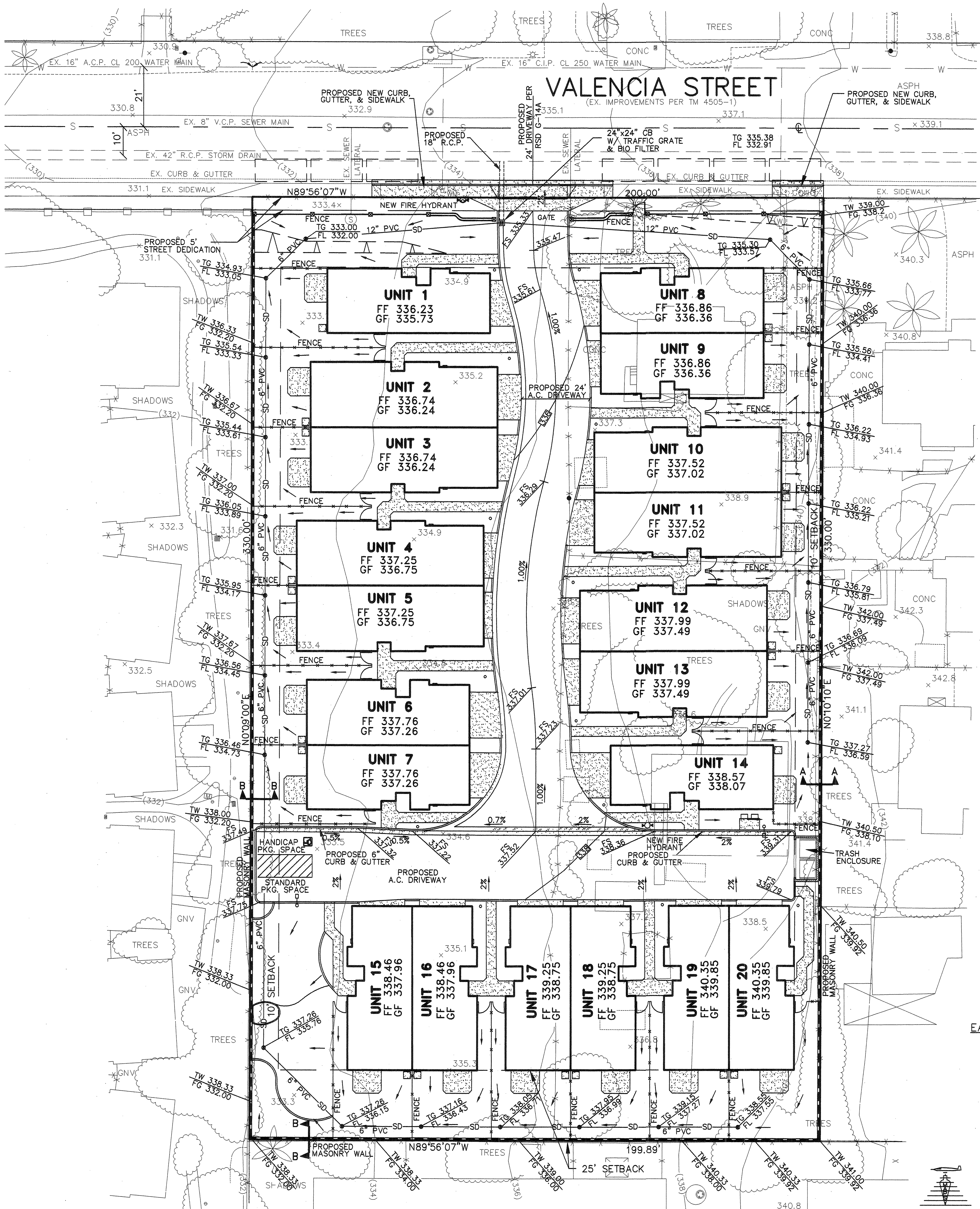

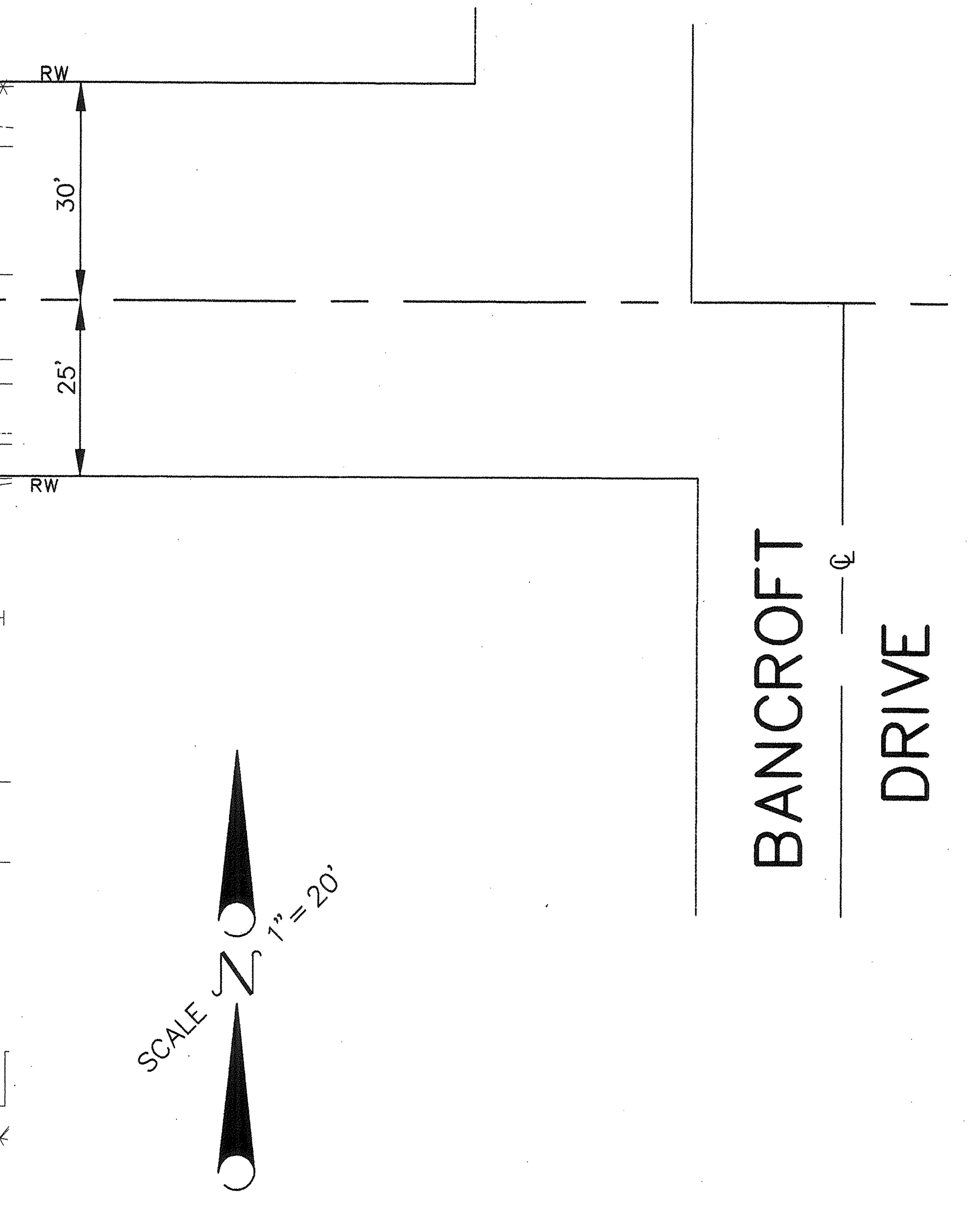

PROJECT NOTES:

1. THE PROJECT CONSISTS OF 20 THREE-BEDROOM UNITS. EACH UNIT HAS TWO CAR GARAGE.
2. THE PROJECT HAS 3 GUEST PARKING SPACES AND 1 HANDICAP PARKING SPACE.
3. EACH UNIT HAS INDIVIDUAL GAS AND ELECTRIC METERS.
4. THE PROJECT PROPOSES A FIVE FOOT HIGH MASONRY TRASH ENCLOSURE WITH ADJACENT AREA FOR RECYCLING.
5. TOPOGRAPHIC IS BASED ON FIELD SURVEY BY LANDMARK ENGINEERING CORP. AND MORENO AERIAL PHOTO SURVEYS DATED: 4-06-04
6. GRADING IS PROPOSED FOR THIS PROJECT.
7. NEW CONSTRUCTION WORK IS PROPOSED.
8. SITE IS NOT SUBJECT TO 100 YEAR LINES OF INUNDATION.
9. SITE HAS NO KNOWN EASEMENTS OF GREATER THAN 20' WIDTH.

THIS PLAN IS PROVIDED TO ALLOW FOR FULL AND ADEQUATE DISCRETIONARY REVIEW OF A PROPOSED DEVELOPMENT PROJECT. THE PROPERTY OWNER ACKNOWLEDGES THAT ACCEPTANCE OR APPROVAL OF THIS PLAN DOES NOT CONSTITUTE AN APPROVAL TO PERFORM ANY GRADING SHOWN HEREON, AND AGREES TO OBTAIN VALID GRADING PERMISSIONS BEFORE COMMENCING SUCH ACTIVITY.

SITE ADDRESS:

APN: 503-400-10
8947-8949 VALENCIA STREET
SPRING VALLEY, CA 91977

APN: 503-400-59
8961-8963 VALENCIA STREET
SPRING VALLEY, CA 91977

LEGAL DESCRIPTION:

A PORTION OF LOT 7 OF RANCHO MISSION OF SAN DIEGO, IN THE COUNTY OF SAN DIEGO, STATE OF CALIFORNIA, ACCORDING TO THE PARTITION MAP OF SAID RANCHO MADE IN THE ACTION OF JUAN M. LUCO, ET AL VS. THE COMMERCIAL BANK OF SAN DIEGO, ET AL AND ON FILE IN THE OFFICE OF THE COUNTY OF SAN DIEGO COUNTY.

APN: 503-400-59-00 AND 503-400-10-00

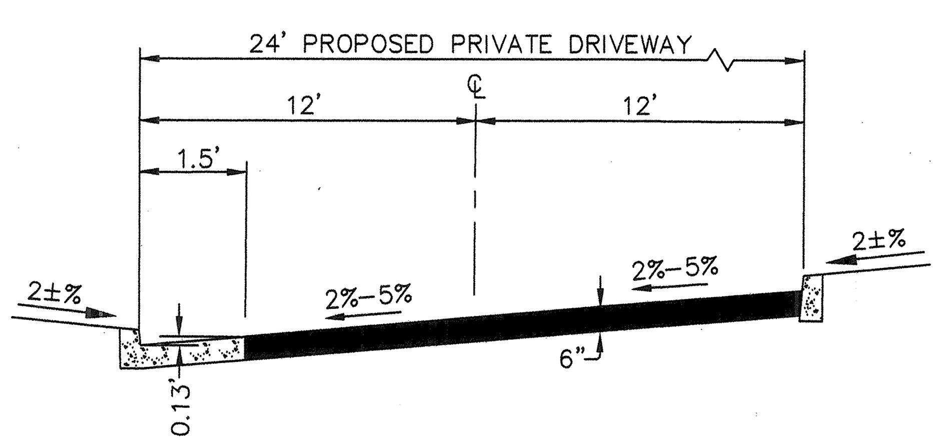

SECTION C-C
24' PRIVATE DRIVEWAY
NO SCALE

ABBREVIATIONS:

TOP OF WALL	TW
FINISH GRADE	FG
FINISH FLOOR	FF
GARAGE FLOOR	GF
TOP OF GRATE	TG
FLOW LINE	FL
FINISH SURFACE	FS
CATCH BASIN	CB

OWNER:

MEHRAN SABERI, PRESIDENT
SPRING VALLEY DEVELOPMENTS, LLC
BY: MAYFAIR HOMES, INC.,
3443 CAMINO DEL RIO SOUTH #312
SAN DIEGO, CA 92108
(619) 280-5777

SETBACKS:

FRONT	50' FROM CENTERLINE
SIDEYARD	10'
REAR YARD	25'

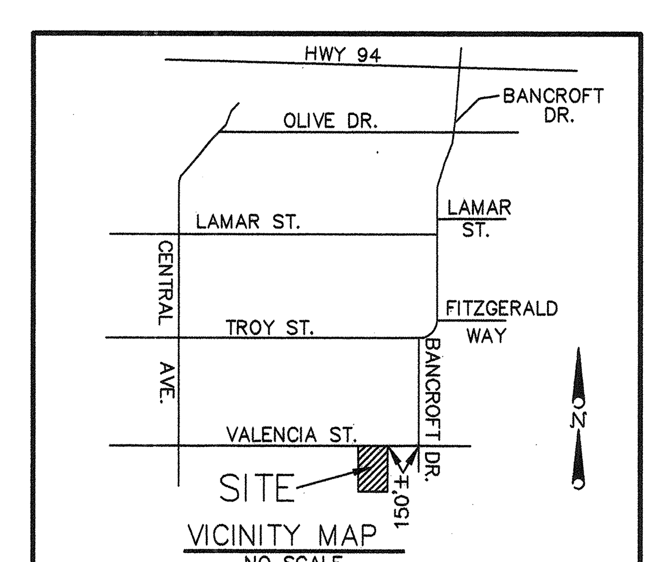

VICINITY MAP
NO SCALE

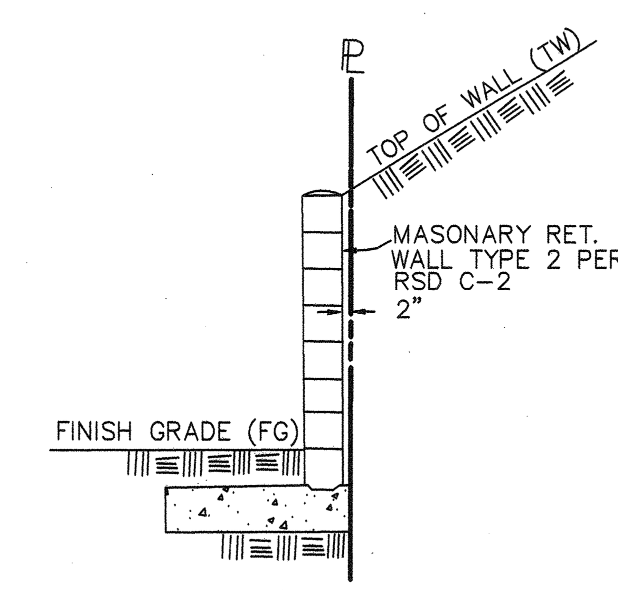

SECTION A-A
NO SCALE

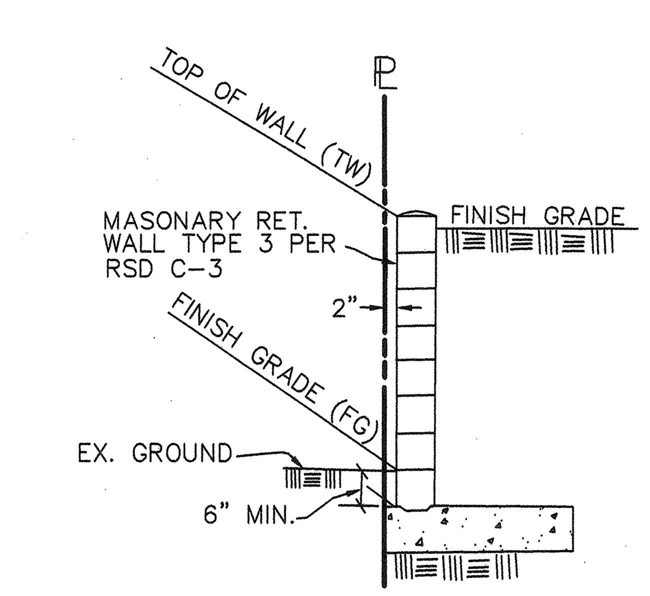

SECTION B-B
NO SCALE

EARTHWORK:

AMOUNT OF CUT: 960 C.Y. AND MAXIMUM DEPTH OF CUT 5.7 FEET
AMOUNT OF FILL: 4,080 C.Y. AND MAXIMUM DEPTH OF FILL 6.4 FEET
AMOUNT OF IMPORT: 3120 C.Y.
MAXIMUM HEIGHT OF FILL SLOPE(S): 4 FEET 2:1 SLOPE RATIO
MAXIMUM HEIGHT OF CUT SLOPE(S): 4 FEET 2:1 SLOPE RATIO
AMOUNT OF EXPORT SOIL: 0 C.Y. NA FEET NA SLOPE RATIO
RETAINING/CRIB WALLS: LENGTH 864 FEET ; MAXIMUM HEIGHT 6.4 FEET.

PROJECT 04-1188 PLOT SCALE 1"= 20'
This map in either graphic or digital form was produced by photogrammetric methods from 1:3000 scale aerial photography dated 4-6-04 for Landmark Engineering.

20 10 0 20 40

PRELIMINARY GRADING PLAN

Valencia Square Condominiums

APN 503-400-10 & 59

PREPARED BY:
LAWRENCE E. COLE RCE 36292
EXP. 6/30/06

REGISTERED PROFESSIONAL ENGINEER LAWRENCE E. COLE No. 36292 Exp. 06/30/06 CIVIL STATE OF CALIFORNIA

LEC

LANDMARK ENGINEERING CORPORATION
2605 Camino Del Rio South
Suite 321
San Diego, CA 92108
(619) 260-0420

2226