HARMONY GROVE VILLAGE

APPENDIX U

# STORM WATER MANAGEMENT PLAN, STORMWATER MAINTENANCE PLAN & DRAINAGE STUDY, AND ESCONDIDO CREEK HYDRAULIC ANALYSIS

VTM 5365; GPA 04-04; MUP 04-012, MUP 04-013, and MUP 04-014; REZ 04-010; SP 04-03; Log No. 04-08-011; SCH No. 2004071004

*for the*

DRAFT ENVIRONMENTAL IMPACT REPORT

AUGUST 2006

# CALIFORNIA ENVIRONMENTAL QUALITY ACT (CEQA)
# STORMWATER MANAGEMENT PLAN &
# STORMWATER MAINTENANCE PLAN
# FOR
# HARMONY GROVE VILLAGE
# VTM 5365; GPA 04-04; MUP 04-012;
# MUP 04-013; MUP 04-014; REZ 04-010;
# SP 04-03; LOG NO. 04-08-011; SCH # 2004071004

**Job Number 14312-B**
**February 27, 2004**
**Revised: October 8, 2004**
**Revised: December 3, 2004**
**Revised: May 23, 2005**
**Revised: January 10, 2006**
**Revised: March 28, 2006**

# CALIFORNIA ENVIRONMENTAL QUALITY ACT (CEQA)

# STORMWATER MANAGEMENT PLAN &

# STORMWATER MAINTENANCE PLAN

# FOR

# HARMONY GROVE VILLAGE

**Job Number 14312-B**

**Project Summary:**
**Existing rural area to be developed to a mixed-use project combining single-family residential, commercial, public facility (fire station, wastewater treatment plant, and village hall), and open /recreation (park, trail, equestrian and recreational facilities) areas.**

Prepared For:

**New Urban West Management, LLC**
520 Broadway, Suite 100
Santa Monica, California 90401
(310) 394-3379

Prepared By:

**Rick Engineering Company**
**Water Resources Department**
5620 Friars Road
San Diego, California 92110-2596
(619) 291-0707

**February 27, 2004**
**Revised: October 8, 2004**
**Revised: December 3, 2004**
**Revised: May 23, 2005**
**Revised: January 10, 2006**
**Revised: March 28, 2006**

| | REVISION PAGE FOR THE STORM WATER MANAGEMENT PLAN AND STORM WATER MAINTENANCE PLAN FOR HARMONY GROVE VILLAGE |
|---|---|
| | J- 14312-B |
| **DATE** | **REVISION/ CHANGES MADE TO PROJECT** |
| 27-Feb-04 | Original submittal to the County of San Diego |
| 8-Oct-04 | Changes have been made to accommodate the County of San Diego plan check comments dated May 24, 2004 |
| 3-Dec-04 | Changes have been made to accommodate Helix Environmental plan check comments |
| 3-Dec-04 | Changes made to the corresponding drainage workmaps to incorporate the Effective 100 year Floodplain and Floodway |
| 23-May-05 | Changes have been made to accommodate the County of San Diego plan check comments dated April 21, 2005 |
| 10-Jan-06 | Changes have been made to accommodate the County of San Diego Plan check comments dated July 13,2005 |
| 28-Mar-06 | Changes have been made to accommodate the County of San Diego Plan check comments dated March 10,2006 |

# CALIFORNIA ENVIRONMENTAL QUALITY ACT (CEQA)

## STORMWATER MANAGEMENT PLAN AND

## STORMWATER MAINTENANCE PLAN FOR

## HARMONY GROVE VILLAGE

## REVISION PAGE

**March 28, 2006**

This stormwater management plan and stormwater maintenance plan (SWMP) provides revisions to the original SWMP dated February 27, 2004 to the County of San Diego Department of Public Land Use (DPLU) plan check comments for the Harmony Grove Village project.

The plancheck comments from the SWMP dated March 10, 2006 and associated Rick Engineering Company responses are listed below. The plancheck comments are in Italics. For clarification purposes, further information is provided in parentheses to explain some of the comments.

Comment: *Please respond to the site and source control tables (pages 7-11) from the "Storm Water Management Plan for Priority Projects (Major SWMP)" which can be downloaded from: www.co.san-diego.ca.us/dpw/stormwater/ susmp.html. See Appendix C: SWMP Template. Please explain why certain options were not selected.*

Response: Please refer to Appendix A for the completed site and source control tables from the document titled "Storm Water Management Plan for Priority Projects (Major SWMP)". Please refer to section 4.2.8 and 4.2.9 for the explanation of why certain options were and were not selected.

Comment: *The entire watershed boundary and contour lines for drainage basins 100 and 1400 should be shown on the "Storm Water Management Plan Exhibit." Please show respective areas for all basins as indicated in Table 4.3, page 34.*

Response: The entire watershed boundary with contour lines for drainage basins 100 and 1400 are on the revised exhibit, please see Map Pocket 1.

Comment: *On page 33, the reference to section "4.2.4" should be revised to "4.2.6." (TYPICAL)*

Response: The text has been revised and as a result the reference to section "4.2.4" has been updated to the appropriate section.

Comment: *Please provide a detail of the diversion box shown on the "Storm Water Management Plan Exhibit for Harmony Grove Village."*

Response: A detail for the diversion boxes are located in exhibit titled, *Storm Water Management Plan Exhibit for Harmony Grove Village.* The diversion boxes are placed in drainage Basin 1000 after each CDS unit (12 diversion boxes).

Comment: *Which water quality basins, within Drainage Basin 1000, contain "actual volumes" of 11.92 and 9.59 acre-ft? Please indicate in Appendix B which basin is assigned to their respective "actual volume" and indicate this information on the map as well. Also, what is the "calculated treatment volume" for each water quality basin within this drainage basin?*

Response: The water quality basins within Drainage Basin 1000 has an "actual volumes" of 11.9 and 9.6 acre-feet. The 11.9 acre-feet is the volume associated with the water quality basin 1000A (calculated treatment volume = 7.9 acre-feet), located on the west of Eden Valley Creek at the downstream portion of Drainage Basin 1000. The 9.6 acre-feet is the volume associated with the water quality basin 1000B (calculated treatment volume = 4.6 acre-feet), located on the

east of Eden Valley Creek at the down stream portion of Drainage basin 1000. The information of the "actual volume" has been indicated on the composite site map, tilted *Storm Water Management Plan Exhibit for Harmony Grove Village* (located in Map Pocket 1). Please refer to the spreadsheet titled "Water Quality Volume Calculations for Harmony Grove Village", located in Appendix B, for the "calculated treatment volume" and the "actual volume". In addition, the pondpack volume calculations for the actual volumes for all water quality basins are provided in Appendix B. All actual volumes are greater or equal to the calculated volumes.

Comment: *What is the "actual volume" for the water quality basin, within Drainage Basin 1200, as shown in the Storm Water Management Plan Exhibit? Please include this value in the "Numeric Sizing Calculations" Table in Appendix B.*

Response: The table titled, *Water Quality Volume Calculations for Harmony Grove Village,* located in Appencix B has all of the actual and calculated volumes for the proposed water quality basins associated with the project. All actual volumes are greater or equal to the calculated volumes. The calculated water quality treatment volume is 0.2 acre-ft. The actual volume is 0.8 acre-feet. The information of the "actual volume" has been indicated on the composite site map, tilted *Storm Water Management Plan Exhibit for Harmony Grove Village* (located in Map Pocket 1). The pondpack volume calculations for the actual volumes for all water quality basins are provided in Appendix B.

Comment: *Given that "Table A, Model Performance Capability" within Appendix C is provided, please assign the proper CDS model type to the required treatment flows within their respective basin.*

Response: The proper CDS model type has been determined for all proposed locations. Please refer to the table titled, "Water Quality Treatment Flowrates for Harmony Grove Village", located in Appendix B. A conservative standard runoff coefficient ("C" value) was used for the calculations of the treatment flow rates for the CDS units associated with the project. For these tentative calculations, the "C" values were obtained from the June 2003 *San Diego County*

*Hydrology Manual,* Table 3-1, and used as a conservative estimate of the overall "C" value. From the proposed product land use (excluding roads), "Hillside Compound" (with a 73 percent impervious) produced the most conservative runoff coefficient value of 0.75 for this project. Therefore, this conservative "C" value was used for all the calculated treatment flow rates draining to each CDS unit. Upon final design, the treatment flows will all be recalculated to accurately reflect the exact land use and thus "C" value.

Comment: *Prior to the recordation of the final map, provide the required two years' security deposit for the two detention basins, water quality basins, hydrodynamic separators, and grass/biofiltration swales. Include this estimated amount in Appendix E of this report. Indicate which category each post-BMP should be assigned to.*

Response: The Cost Estimate for the required two years security deposit for the Treatment Control BMPs (Category 2) associated with this project (2 Detention Basins, 5 Water Quality Basins, 15 hydrodynamic separators, 3 grass/biofiltration swales) is located in Appendix E. All of the Treatment Control BMPs are Category 2 and the Site Design and Source Control BMPs are Category 1, as stated in Section 6.0 of the Storm Water Management Plan

Comment: *Please include in section 5.3 and Appendix B the detention and water quality basin dimensions to support the "actual volumes" proposed.*

Response: The dimensions to support the "actual volumes" for the detention and water quality basins are located in Appendix B. The actual volume calculation was determined using a program called pondpack. Section 5.3 is the maintenance procedures for the detention and water quality basins. A reference to Appendix B was added to the text in section 5.3.

Comment: *Please provide additional site design BMP's for equestrian areas – drainage basin EQ1 and EQ2. Are there additional post-BMP's that can be provided considering the equestrian area and its proximity to Escondido Creek?*

Response: The equestrian areas have aggressive site design and source control BMPs located in section 4.2.1, 4.2.2 and 4.2.7. In addition to the site design and source control BMPs, treatment control BMPs are proposed for the equestrian facility, which includes water quality basins, Enhanced Bio-filtration swales and buffer strips (section 4.2.8). The Bio-filtration swales have been upgraded to be Enhanced Bio-filtration. This means a wood dam is placed periodically throughout the length of the swale, including the discharge point, to detain the runoff in order to prolong the contact time and help promote greater settling of pollutants. This will help significantly improve the conventional bio-filtration swales by exceeding the contact time (residence time). Please refer to section 4.2.8 for the information to the enhanced bio-filtration. In addition, a detail has been added to the exhibit located in Map Pocket 1.

## TABLE OF CONTENTS


1.0 Introduction ..... 1

1.1 Project Description ..... 1

1.2 Topography and Land Use ..... 3

1.3 Hydrologic Unit Contribution ..... 4

2.0 Water Quality Environment ..... 5

2.1 Beneficial Uses ..... 5

2.2 Inland Surface Waters ..... 5

2.3 Groundwater ..... 9

2.4 303(d) Status ..... 10

2.5 Environmentally sensitive area ..... 10

3.0 Characterization of Project Runoff ..... 11

3.1 Identification of Pollutants of Concern ..... 11

3.2 Identification of Conditions of Concern ..... 13

3.3 Soil Characteristics ..... 14

4.0 Mitigation Measures to Protect Water Quality ..... 15

4.1 Construction BMPs ..... 15

4.1.1 Specific Harmony Grove Village Construction BMPs Activity ..... 17

4.2 Post-Construction BMPs ..... 21

4.2.1 Site Design BMPs ..... 21

4.2.2 Source Control BMPs ..... 22

4.2.3 Treatment Control BMPs ..... 28

4.2.4 Treatment Control BMPs Selection Process ..... 33

4.2.5 BMPs Selected for Harmony Grove Village Project ..... 35

4.2.6 BMPs Not Selected for Harmony Grove Village Project ..... 36

4.2.7 Equestrian Facility BMPs ..... 37

4.2.8 BMPs Selected for the Equestrian Facility in Harmony Grove Village ..... 41

4.2.9 BMPs Not Selected for the Equestrian Facility in Harmony Grove Village ..... 43
5.0 Operation and Maintenance Program ..... 45
5.1 Drainage Insert and Hydrodynamic Separators Maintenance Activities ..... 45
5.2 Grass/Bio-Filtration Swale Maintenance Activities ..... 46
5.3 Detention/Water Quality Basin Maintenance Activities ..... 46
5.4 Site Design and Source Control Operation and Maintenance Activities ..... 47
6.0 Fiscal Resources ..... 49
7.0 Summary/Conclusions ..... 51
8.0 Certification Page ..... 52

**Figures:**

Figure 1.1: Vicinity Map ..... 2
Helix Exhibit ..... 18

**Tables:**

Table 2.1: Beneficial Uses of Inland Surface Waters in Hydrologic Unit 904.62 ..... 6
Table 2.2: Beneficial Uses of Ground Waters in Hydrologic Unit 904.62 ..... 9
Table 3.1: Anticipated and Potential Pollutants Generated by Land Use Type ..... 12
Table 4.1: Standard Storm Water BMP Selection Matrix ..... 26
Table 4.2: Summary of Water Quality Volume Calculations ..... 32
Table 4.3: Summary of Water Quality Flow Rate Calculations ..... 32
Table 4.4: Treatment Control BMP Selection Matrix ..... 34

**Appendices:**

Appendix A: September 8,1994 report titled, *Water* Excerpts from the September *Quality Control Plan for the San Diego Basin* and site and source control tables from the document titled, *Storm Water Management Plan for Priority Projects (Major SWMP)*
Appendix B: Calculations for Water Quality Treatment Flow Requirements

Appendix C: Water Quality Treatment Capacities, Details, and Costs

Appendix D: 85th Percentile Precipitation Isopluvial Map Rainfall in Inches

Appendix E: Estimated O & M Costs for BMP Project

Appendix F: Environmentally Sensitive Areas

**Map Pockets:**

Map Pocket 1: Storm Water Management Plan Exhibit for Harmony Grove Village

Map Pocket 2: Tentative Maps for Harmony Grove Village (Post-Project Condition), Sheets 1,2 and 3 of 5

Map Pocket 3: Tentative Maps for Harmony Grove Village (Post-Project Condition), Sheets 4 and 5 of 5

# INTRODUCTION

This Stormwater Management Plan & Stormwater Maintenance Plan (SWMP) is prepared for the Harmony Grove Village project tentative map submittal. The project is owned by New Urban West Management, LLC. A SWMP is required under the County of San Diego Watershed Protection, Stormwater Management, and Discharge Control Ordinance (section 67.817). The purpose of this SWMP is to address the water quality impacts from the proposed project. Best management practices (BMPs) will be utilized to provide a long-term solution to water quality at the project site. This SWMP is also intended to ensure the effectiveness of the BMPs through proper maintenance that is based on long-term fiscal planning. Two documents have been utilized to create this SWMP. This SWMP has been prepared based on the guidance provided in the County of San Diego Standard Urban Storm Water Mitigation Plan for Land Development and Public Improvement Projects (County SUSMP), dated February 10, 2003 and the Storm Water Management Plan For Priority Projects (Major SWMP), dated August 2005. This SWMP is subject to revisions as needed by the engineer.

## 1.1 Project Description

The project site is located within the County of San Diego. The project is bound by Wilgen Road on the west and Country Club Drive on the east. The project is intersected by Harmony Grove Road and Escondido Creek. The project location is shown on Figure 1.1, Vicinity Map.

The project proposes to develop an existing rural area into a mixed-use project combining single-family residential, commercial, public facility (fire station, wastewater treatment plant, and village hall), and open/recreation (park, trail, equestrian, and recreational facilities) areas, as described below in Section 1.2 titled, *Topography and Land Use*. The project site area is approximately 475 acres.

## 1.2 Topography and Land Use

In the pre-project condition the Harmony Grove Village project area is at the southern, downstream portion of the Eden Valley Creek watershed. It is comprised of gently rolling hills with egg ranches, a dairy, avocado groves, citrus groves, an abandoned rock quarry, and low-density single family homes. In the pre-project condition the site generally drains towards Eden Valley Creek and is conveyed in a southerly direction. Eden Valley Creek confluences with Escondido Creek, immediately south of Harmony Grove Road and west of Country Club Drive. In addition, south of Escondido Creek and west of Country Club Drive is an area comprised of pastures and scattered barns and drains northerly into Escondido Creek. This area is also included in the Harmony Grove Village project.

A total 706 units consisting of single-family homes are proposed for this project. In addition, office/retail areas are proposed in which there will be additional apartment/condominium type homes on the second floor. Public facilities such as a fire station, wastewater treatment plant, and a village hall are also proposed for this development. There will also be open/recreational areas located on-site that shall be comprised of parks, trails, equestrian and recreational facilities. The proposed equestrian area south of Escondido Creek will be comprised of pastures and scattered barns. The proposed site design is shown on the exhibit titled, *Storm Water Management Plan Exhibit for Harmony Grove Village*, located in Map Pocket 1.

In the post-project condition, portions of Eden Valley Creek and the local tributaries, shall be developed into natural lined channels with a series of drop structures. In addition, two detention basins are proposed to detain the 2-, 10- and 100-year post-project storm events. Detention basin 1 (Open Space Lot Number 9) is located at the northeast corner of the project, and Detention Basin 2 (Open Space Lot Number 27) is located in the southwest portion of the project, as shown in the exhibit titled, *Storm Water Management Plan Exhibit for Harmony Grove Village*, located in Map Pocket 1. The site shall be served by a series of proposed storm drain systems and drainage swales. These drainage systems shall convey the 100-year storm event and treat the required treatment flow or volume before confluencing with Eden Valley Creek or Escondido Creek. The required treatment volumes and/or flow rates shall be treated by a variety of post-

construction BMPs such as Hydrodynamic Separators, water quality basins, buffer strips and grass/bio-filtration swales, along with applicable site design and source control BMPs.

## 1.3 Hydrologic Unit Contribution

The project is located in the Escondido Hydrologic Subarea in the Escondido Creek Hydrologic Area in the Carlsbad Hydrologic Unit (904.62). Overall, the project site represents 1.6 percent of the Escondido Hydrologic Subarea. Located in Appendix A is an exhibit titled, *Hydrologic Location Map*, that shows the project's location within the hydrologic unit.

# 2.0 WATER QUALITY ENVIRONMENT

## 2.1 Beneficial Uses

Beneficial uses are the uses of water necessary for the survival or well being of humans, plants and wildlife. These uses of water serve to promote the tangible and intangible economic, social, and environmental goals of humankind. Water quality objectives and beneficial uses can be found in the September 8, 1994, Water Quality Control Plan for the San Diego Region (San Diego Basin Plan) prepared by the SDRWQCB. The project is located in SDRWQCB Hydrologic Unit 904.62. The beneficial uses of inland surface waters and groundwater in Hydrologic Unit 904.62 are discussed below in Sections 2.2 and 2.3 titled, *Inland Surface Waters* and *Groundwater*, Respectively. Relevant excerpts from the San Diego Basin Plan are provided in Appendix A of this report.

The annual average rainfall for the project vicinity is approximately 13.5 inches per year (RWQCB 1994, as amended; MEC Analytical system, inc. MEC 2004) and concurred with the exhibit titled, *Average Annual Inches of Rainfall,* figure 1-2, of the June 2003 *County of San Diego Hydrology Manual.*

## 2.2 Inland Surface Waters

In Appendix A of this SWMP, the beneficial uses for Hydrologic Unit Basin Number 904.62 are related to Escondido Creek. The project site is comprised of two areas; the larger of the two areas is located north of Harmony Grove Road, and Escondido Creek. The largest area drains to Eden Valley Creek, flowing in a southerly direction and then confluences with Escondido Creek in the southern portion of the project. The remaining project area, south of Harmony Grove Road and Escondido Creek, is an equestrian area, which is comprised of two drainage basins. The eastern drainage basin drains in a northerly direction, directly to Escondido Creek via bio-filtration swales. The southwest drainage basin of the equestrian area will drain southerly to a water quality basin and ultimately to Escondido Creek. Table 2-1 presents a summary of the beneficial uses of surface waters in SDRWQCB Hydrologic Unit 904.62.

**Table 2-1**
**Beneficial Uses of Inland Surface Waters in Hydrologic Unit 904.62**

| Inland Surface Waters | Hydrologic Unit Basin Number | Beneficial Use | | | | | | | | | | | | | | |
|---|---|---|---|---|---|---|---|---|---|---|---|---|---|---|---|---|
| | | MUN | AGR | IND | PROC | GWR | FRSH | POW | REC1 | REC2 | BIOL | WARM | COLD | WILD | RARE | SPWN |
| **Escondido Creek Watershed** | | | | | | | | | | | | | | | | |
| Escondido Creek Watershed | 4.62 | E | E | P | | | | | E | E | | E | E | E | | |

**E=Existing Beneficial Use**
**P=Potential Beneficial Use**
**Source: September 8, 1994 Water Quality Control Plan for the San Diego Basin (9)**

The following text describes the Beneficial Uses as identified in Table 2-1 and Table 2-2:

Municipal and Domestic Supply (MUN) – Includes uses of water for community, military, or individual water supply systems including, but not limited to, drinking water supply.

Agricultural Supply (AGR) – Includes uses of water for farming, horticulture, or ranching including, but not limited to, irrigation, stock watering, or support of vegetation for range grazing.

Industrial Process Supply (PROC) – Includes uses of water for industrial activities that depend primarily on water quality.

Industrial Service Supply (IND) – Includes uses of water for industrial activities that do not depend primarily on water quality including, but not limited to, mining, cooling water supply, hydraulic conveyance, gravel washing, fire protection, or oil well re-pressurization.

Ground Water Recharge (GWR) – Includes uses of water for natural or artificial recharge of ground water for purposes of future extraction, maintenance of water quality, or halting of saltwater intrusion into freshwater aquifers.

Freshwater Replenishment (FRSH) – Includes uses of water for natural or artificial maintenance of surface water quantity or quality (e.g., salinity)

Navigation (NAV) – Includes uses of water for shipping, travel, or other transportation by private, military, or commercial vessels.

Hydropower Generation (POW) – Includes uses of water for hydropower generation.

Contact Water Recreation (REC1) – Includes uses of water for recreational activities involving body contact with water, where ingestion of water is reasonably possible. These uses include, but are not limited to, swimming, wading, water-skiing, skin and SCUBA diving, surfing, white water activities, fishing, or use of natural hot springs.

Non-Contact Water Recreation (REC2) – Includes the uses of water for recreational activities involving proximity to water, but not normally involving body contact with water, where ingestion of water is reasonably possible. These uses include, but are not limited to, picnicking, sunbathing, hiking, beachcombing, camping, boating, tidepool and marine life study, hunting, sightseeing, or aesthetic enjoyment in conjunction with the above activities.

Commercial and Sport Fishing (COMM) – Includes the uses of water for commercial or recreational collection of fish, shellfish, or other organisms including, but not limited to, uses involving organisms intended for human consumption or bait purposes.

Aquaculture (AQUA) – Includes the uses of water or aquaculture or mariculture operations including, but not limited to propagation, cultivation, maintenance or harvesting of aquatic plants and animals for human consumption or bait purposes.

Warm Freshwater Habitat (WARM) – Includes uses of water that support warm water ecosystems including, but not limited to, preservation or enhancement of aquatic habitats, vegetation, fish or wildlife, including invertebrates.

Cold Freshwater Habitat (COLD) – Includes uses of water that support cold water ecosystems including but not limited to, preservation or enhancement of aquatic habitats, vegetation, fish or wildlife, including invertebrates.

Inland Saline Water Habitat (SAL) – Includes uses of water that support inland saline water ecosystems including, but not limited to, preservation or enhancement of aquatic saline habitats, vegetation, fish, or wildlife, including invertebrates.

Estuarine Habitat (EST) – Includes uses of water that support estuarine ecosystems including, but not limited to, preservation or enhancement of estuarine, habitats, vegetation, fish, shellfish, or wildlife (e.g., estuarine mammals, waterfowl, shorebirds).

Marine Habitat (MAR) – Includes uses of water that support marine ecosystems including, but not limited to, preservation or enhancement of marine habitats, vegetation such as kelp, fish, shellfish, or wildlife (e.g., marine mammals, shorebirds).

Wildlife Habitat (WILD) – Includes uses of water that support terrestrial ecosystems including, but not limited to, preservation and enhancement of terrestrial habitats, vegetation, wildlife (e.g., mammals, birds, reptiles, amphibians, invertebrates), or wildlife water and food sources.

Preservation of Biological Habitats of Special Significance (BIOL) – Includes uses of water that support designated areas or habitats, such as established refuges, parks, sanctuaries, ecological reserves, or Areas of Special Biological Significance (ASBS), where the preservation or enhancement of natural resources requires special protection.

## 2.3 Groundwater

The following statement is from the September 7, 2004 soil report prepared by Pacific Soils Engineering.

> *Shallow groundwater conditions exist at the site and likely reflect the relatively shallow (i.e., 20 ft. or less) depths to bedrock. Owing to the modification of natural drainage courses by the agricultural operations, surface flow has been redirected; however, subsurface flows are still likely controlled by the filled-over drainage courses. Hence, the construction of the tile drain by current owner was undertaken as a means to convey subsurface flow and control near surface groundwater during seasonal wet periods. Surface flow exists in the principal drainage course that runs though the central portion of the project and seepage was observed in a shallow cut for the equestrian center in the north portion of the site. The seepage appears to be following the contact between the surficial soils and the bedrock, and is likely recharged to some degree by irrigation of grove areas on the northern edge of the site seasonal precipitation.*

Based on Table 2-5 of the San Diego Basin Plan, beneficial uses of ground water apply to the Hydrologic Unit 904.62. A copy of the relevant portion of the San Diego Basin Plan is provided in Appendix A of this SWMP. Table 2-2 is an excerpt from the Basin Plan:

**Table 2-2**
**Beneficial Uses of Ground Waters in Hydrologic Unit 904.62**

| Ground Water | Hydrologic Unit Basin Number | Beneficial Use | | | | | |
|---|---|---|---|---|---|---|---|
| | | MUN | AGR | IND | PROC | FRSH | GWR |
| **Carlsbad Hydrologic Unit** | | | | | | | |
| Escondido Creek Watershed | 4.62 | E | E | E | | | |

**E=Existing Beneficial Use**
**P=Potential Beneficial Use**
**Source: September 8, 1994 Water Quality Control Plan for the San Diego Basin (9)**

## 2.4 303(d) Status

Under Section 303(d) of the 1972 Clean Water Act, states, territories and authorized tribes are required to develop a list of water quality limited segments. These waters on the list do not meet water quality standards, even after point sources of pollution have installed the minimum required levels of pollution control technology. The law requires that the above-mentioned jurisdictions establish priority rankings for water on the lists and develop action plans, called Total Maximum Daily Loads (TMDLs), to improve water quality.

The project is located in SDRWQCB Hydrologic Unit 904.62. Based on the "2002 Clean Water Act Section 303(d) List of Water Quality Limited Segment" approved by the United States Environmental Protection Agency (USEPA) July 2003, there are no impaired water bodies in Hydrologic Unit 904.62. The nearest impaired water body is the San Elijo Lagoon in Carlsbad Hydrologic Unit 904.61, located approximately 11 miles downstream of the project. The pollutants/stressors related to San Elijo Lagoon are bacterial indicators, eutrophic, and sedimentation/siltation. Therefore, there are no impaired water bodies directly associated with this project.

## 2.5 Environmental Sensitive Area

Based on Appendix B of the County SUSMP manual, it was determined that this project is not located in any environmentally sensitive area. Please see Appendix F of this SWMP for an exhibit of the environmentally sensitive areas.

## 3.0 CHARACTERIZATION OF PROJECT RUNOFF

Chapter 3 of the County SUSMP provides a procedure to identify pollutants and conditions of concern from priority projects and to prioritize the findings for selection of treatment measures. This Section of the SWMP utilizes the procedure described in Chapter 3 of the County SUSMP. Once identified, appropriate control measures for these pollutants and conditions are specified in Section 4 of the County SUSMP. Appropriate control measures for the Harmony Grove Village project will be discussed in Section 4 of this SWMP.

### 3.1 Identification of Pollutants of Concern

Table 3.1 of the County SUSMP, *Anticipated and Potential Pollutants Generated by Land Use Type*, indicates general pollutant categories that are either anticipated or potential pollutants for specific project categories. The project is in the following priority project categories: "Detached Residential Development", "Attached Residential Development, "Parking Lots", 'Hillside Development", and "Streets, Highways, & Freeways". Therefore anticipated and potential pollutants from commercial development are also identified here. Table 3.1 of the County SUSMP is reprinted here to identify the anticipated and potential pollutants from the above listed priority project categories.

## Table 3.1
## Anticipated and Potential Pollutants Generated by Land Use Type

| | General Pollutant Categories | | | | | | | | |
|---|---|---|---|---|---|---|---|---|---|
| ***Priority Project Categories*** | **Sediment** | **Nutrients** | **Heavy Metals** | **Organic Compounds** | **Trash & Debris** | **Oxygen Demanding Substances** | **Oil & Grease** | **Bacteria** | **Pesticides** |
| Detached Residential Development | X | X | | | X | X | X | X | X |
| Attached Residential Development | X | X | | | X | P(1) | P(2) | P | X |
| Commercial Development >100,000 $ft^2$ | P(1) | P(1) | | P(2) | X | P(5) | X | P(3) | P(5) |
| Automotive Repair Shops | | | X | X(4)(5) | X | | X | | |
| Restaurants | | | | | X | X | X | X | |
| Hillside Development >5000 $ft^2$ | X | X | | | X | X | X | | X |
| Parking Lots | P(1) | P(1) | X | | X | P(1) | X | | P(1) |
| Streets, Highways & Freeways | X | P(1) | X | X(4) | X | P(5) | X | | |

X = Anticipated

P = Potential

(1) A potential pollutant if landscaping exists on-site
(2) A potential pollutant if the project includes uncovered parking areas
(3) A potential pollutant if land use involves food or animal waste products
(4) Including petroleum hydrocarbons
(5) Including solvents

*Source: County of San Diego Standard Urban Storm Water Mitigation Plan for Land Development and Public Improvement Projects (February 10, 2003)*

Based on the data shown in Table 3.1, pollutants from the highlighted *General Pollutant Categories* may be found on-site after construction of the project. Chapter 3.1.2 of the County SUSMP provides a procedure to prioritize the pollutants as primary or secondary pollutants of

concern. Primary pollutants of concern are those pollutants that exhibit one or more of the following characteristics:

- Current loadings or historical deposits of the pollutant are impairing the beneficial uses of a receiving water;
- Elevated levels of the pollutant are found in water or sediments of a receiving water and/or have the potential to be toxic to or bioaccumulate in organisms therein; and
- Inputs of the pollutant are at a level high enough to be considered potentially toxic.

As discussed above in Section 2.0, the project is located in SDRWQCB Hydrologic Unit 904.62. Based on the "2002 Clean Water Act Section 303(d) List of Water Quality Limited Segment" approved by the United States Environmental Protection Agency (USEPA) July 2003, there are no impaired water bodies in Hydrologic Unit 904.62. Therefore, none of the pollutant categories identified in Table 3.1 are considered primary pollutants of concern. The pollutants identified in Table 3.1 are considered secondary pollutants of concern. The project will implement a treatment train of source control BMPs, site design BMPs, and treatment control BMPs to reduce the generation of these pollutants on-site and reduce the transport of these pollutants off-site. These BMPs are discussed in Section 4.0 of this report.

## 3.2 Identification of Conditions of Concern

Conditions of concern are related to any relevant hydrologic and environmental factors that are to be protected specific to the project area's watershed. As discussed in Section 1 of this SWMP, the existing land use at the project area is a rural area characterized with gently rolling hills with scattered homes and farms. The post-project land use is combining single-family residential, commercial, public facility (fire station, wastewater treatment plant, and village hall), and open/recreation (park, trail, equestrian and recreational facilities) land uses. The post-project runoff shall be conveyed in proposed on-site storm drain systems and drainage swales.

The proposed project will not significantly alter drainage patterns on the site. The majority of the project shall drain in a southerly direction to Eden Valley Creek, and then confluence with

Escondido Creek at the southern portion of the project. The equestrian area located south of Escondido Creek has two drainage basins. The eastern drainage basin drains in a northerly direction, directly to Escondido Creek via bio-filtration swales. The southwest drainage basin of the equestrian area, will drain southerly to a water quality basin and ultimately to Escondido Creek.

The project is located in the upper portion the Carlsbad Hydrologic Unit (904.62), and as a result, mitigation for downstream erosion shall be implemented on-site by detaining for the 2- and 10- year storm events. In addition the post-project flow rates shall be detained to or below pre-project flow rates for the 100-year storm event. There shall be two detention basins proposed for Harmony Grove Village. Discussion of the detention basins design is located in the December 19, 2005 drainage report titled, *Drainage Study for Harmony Grove Village, Tentative Map,* (prepared by Rick Engineering Company, Job Number 14312B). The pre- and post-project hydrologic and hydraulic analyses are also contained in the drainage report.

## 3.3 Soil Characteristics

Based on the United States Department of Agriculture (USDA) Soil Survey for San Diego Area, California, dated December 1973, the soil types within and surrounding the project area are B, C, and D. A mixture of soils type C and D characterizes the majority of the project, with some soil type B located at the northern boundary, and surrounding Escondido Creek. According to the *Soil Survey San Diego Area California: United States Department of Agriculture* (1973) the permeability of sandy loam is 2.0 to 6.3 inches per hour and the erodibility is considered severe. However at all proposed outlets, the appropriate energy dissipaters will be constructed.

## 4.0 MITIGATION MEASURES TO PROTECT WATER QUALITY

To address water quality for the project, BMPs will be implemented during construction and post-construction.

### 4.1 Construction BMPs

During the construction phase, the project will be subject to the requirements of the "Waste Discharge Requirements (WDR) for Discharges of Storm Water Runoff Associated with Construction Activity" as indicated by the State Water Resources Control Board (SWRCB) Order No. 99-08-DWQ National Pollutant Discharge Elimination System (NPDES) General Permit No. CAS000002 (General Construction Permit). For coverage by the General Construction Permit, the project owner is required to submit to the SWRCB a Notice of Intent (NOI) to comply with the General Construction Permit, and develop a *Storm Water Pollution Prevention Plan* (SWPPP) describing BMPs to be used during and after construction to prevent the discharge of sediment and other pollutants in storm water runoff from the project. As part of the SWPPP, a Storm Water Sampling and Analysis Strategy (SWSAS) must be developed for the construction site. The SWSAS is included in the project's SWPPP. The objectives of the SWSAS are to determine whether BMPs implemented on the construction site are: (1) preventing further impairment by sediment in storm waters discharged directly into waters listed as impaired for sediment or silt [i.e., listed on Attachment 3 of the General Construction Permit, which identifies waters listed as impaired for sediment, silt, or turbidity on the Clean Water Act Section 303(d) List]; and (2) preventing other pollutants, that are known or should be known by permittees to occur on construction sites and that are not visually detectable in storm water discharges, from causing or contributing to exceedances of water quality objectives. In order to terminate coverage under the General Construction Permit, the developer must submit a Notice of Termination (NOT) and a Post-Construction Storm Water Operation and Management Plan (PCSWOMP) according to Section A.10 of the General Construction Permit to the Regional Water Quality Control Board (RWQCB).

Since the project is currently at Tentative Map submittal stage, a SWPPP has not been prepared. It is anticipated that during final design for this project, Rick Engineering Company shall prepare the SWPPP. A listing of potential types of temporary BMPs that may be specified in the SWPPP for the project is as follows:

- Silt fence
- Fiber rolls
- Street sweeping and vacuuming
- Storm drain inlet protection
- Stockpile management
- Solid waste management
- Stabilized construction entrance/exit
- Dewatering operations
- Vehicle and equipment maintenance
- Erosion control mats and spray-on applications
- Desilting basin
- Gravel bag berm
- Sandbag barrier
- Material delivery and storage
- Spill prevention and control
- Concrete waste management
- Water conservation practices
- Paving and grinding operations
- Permanent revegetation of all disturbed uncovered areas
- Any minor slope created incidental to construction and not subject to a major or minor grading permit shall be protected by cover with plastic or tarp prior to a rain event, and shall have vegetative cover reestablished within 180 days or completion of the slope and prior to final building approval

Construction BMPs for this project should be selected, constructed, and maintained so as to comply with all applicable ordinances and guidance documents.

### 4.1.1 Specific Harmony Grove Village Construction BMPs Activities

Since the project is currently at Tentative Map submittal stage, a SWPPP has not been prepared. It is anticipated that during final design for this project, Rick Engineering Company shall prepare the SWPPP. The following is a addresses potential concerns related to long-term water quality at the site involving the presence of contaminants associated with previous agricultural in quarry activities. Specifically, previous agricultural uses of the site included two egg ranches, two dairies and several avocado/citrus orchards (Refer to exhibit located on next page). These activities involved the use, storage and/or generation of a number of chemicals and materials that could potentially generate contaminants affecting long-term water quality, including soils containing fuels (or other hydrocarbons) leaked from storage tanks, chemical pesticide/herbicide (or other agricultural chemical) residues in soils, contaminated shallow groundwater (e.g., from percolation of dairy ponds), high organic content in soils (e.g., from manure stockpiles), and hazardous materials present in agricultural-related structures (e.g., lead-based paint and asbestos insulation). Environmental analysis of the proposed project has involved a number of technical investigations related to one or more of the described contaminant sources, with a number of specific remediation efforts identified to address these concerns. Specifically, site-specific technical investigations have included hazardous materials Phase I and limited Phase II (i.e., sampling and testing) evaluations, as well as geotechnical analysis. Project hazardous materials assessments were conducted by Petra Geotechnical, Inc.(Petra; 2005a, 2005b, 2005c, 2005d, and 2004), while geotechnical analyses were completed by Pacific Soils Engineering, Inc. (PSE; 2005a, 2005b, 2004a and 2004b). Identified remedial measures identified in the referenced hazardous materials and/or geotechnical analyses to address the potential occurrence of contaminants from agricultural (and other) sources are summarized below:

- Removal and appropriate off-site disposal of all fuel and chemical storage tanks/containers associated with on-site agricultural operations.

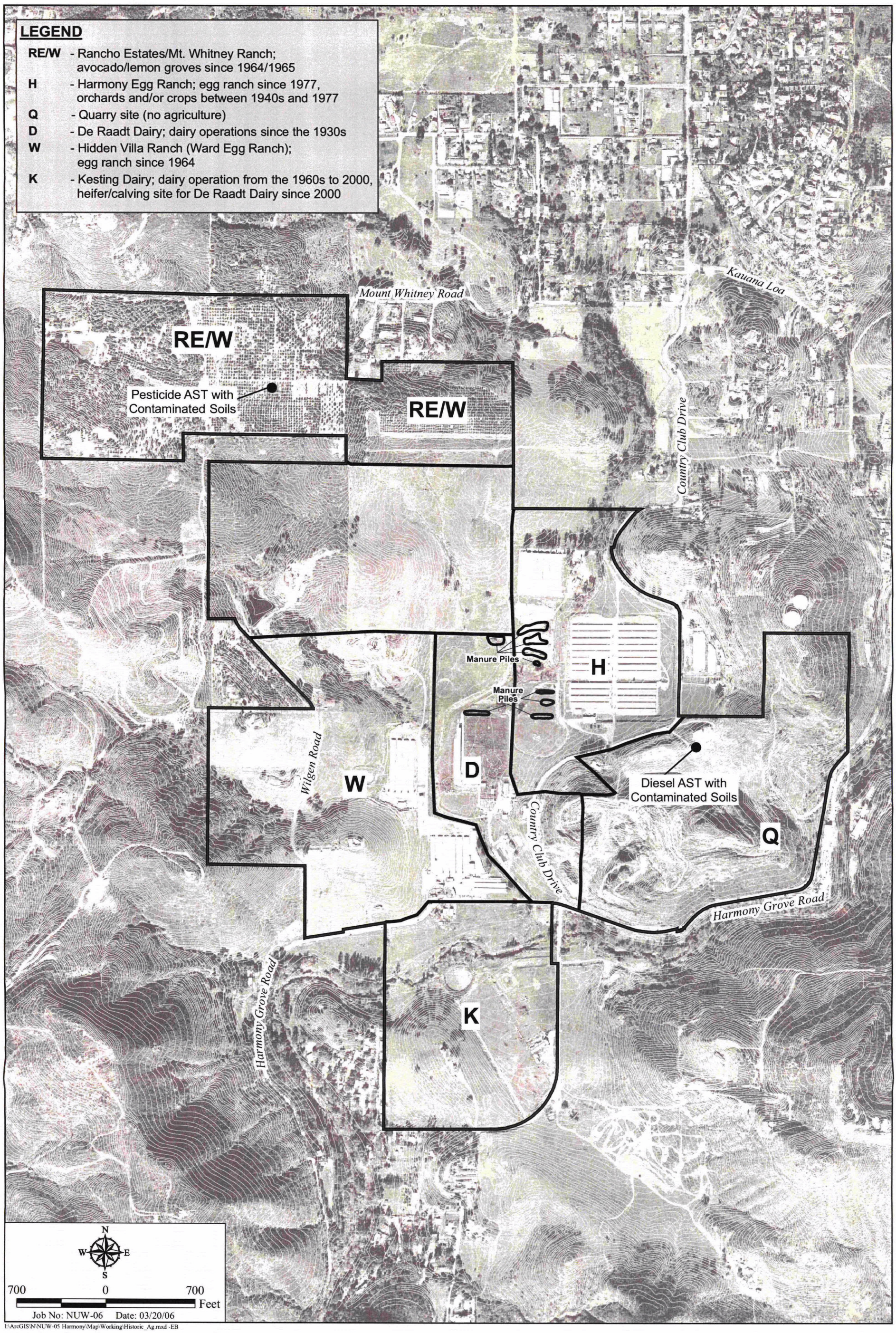
LEGEND
RE/W - Rancho Estates/Mt. Whitney Ranch; avocado/lemon groves since 1964/1965
H - Harmony Egg Ranch; egg ranch since 1977, orchards and/or crops between 1940s and 1977
Q - Quarry site (no agriculture)
D - De Raadt Dairy; dairy operations since the 1930s
W - Hidden Villa Ranch (Ward Egg Ranch); egg ranch since 1964
K - Kesting Dairy; dairy operation from the 1960s to 2000, heifer/calving site for De Raadt Dairy since 2000
Mount Whitney Road
Kauana Loa
RE/W
RE/W
Pesticide AST with Contaminated Soils
Country Club Drive
Manure Piles
Manure Piles
H
Wilgen Road
W
D
Diesel AST with Contaminated Soils
Country Club Drive
Q
Harmony Grove Road
Harmony Grove Road
K
N
W
E
S
700
0
700
Feet
Job No: NUW-06 Date: 03/20/06
I:\ArcGIS\N\NUW-05 Harmony\Map\Working\Historic_Ag.mxd -EB

HELIX

- Removal and appropriate off-site disposal of soils in the vicinity of fuel storage tanks with identified hydrocarbon contamination. Specifically, a pesticide storage shed, several above-ground storage tanks (ASTs) for diesel fuel, and one AST for pesticides were present on the site. Soil sampling/testing was conducted to evaluate shallow site soils for potential impact by pesticides and/or total petroleum hydrocarbons (TPH), with high levels of toxaphene identified below the nozzle of the former pesticide AST, and limited concentrations of TPH detected in soils adjacent to one former diesel AST (Refer to exhibit located on previous page). No soil contamination was observed in association with the pesticide storage shed or any other AST locations. Recommendations in the hazardous materials investigations for the noted contamination sites include: (1) removing soil directly below the nozzle of the pesticide AST in a two foot radius down to a depth of 1.5 feet below ground, and properly disposing of this soil of in accordance with current regulations; and (2) removal and disposal of contaminated soil adjacent to the diesel AST "in accordance with current regulations...", along with post-excavation testing to "...confirm the absence of impacted soils." (Petra 2005a). In addition to conformance with identified hazardous material requirements for removal/disposal of contaminated soils (e.g., appropriate excavation depths and extents based on recommendations and field direction), a number of BMPs would be implemented in association with these activities, including the use of measures to control erosion/sedimentation (e.g., soil containment devices such as fiber rolls and silt fences) and transport of excavated material (e.g., properly fitted covers on transport vehicles).

- Implementation of appropriate testing and (if applicable) treatment of groundwater extracted during site construction in conformance with associated NPDES requirements (i.e., pursuant to the NPDES General Groundwater Extraction Waste Discharge Permit, NPDES NO. CAG919002, RWQCB Order No. 2001-96). Specific BMPs associated with these efforts may include testing and treatment of extracted groundwater (e.g., through filtering or conveyance to a sewage treatment facility) prior to disposal, as well as the use of erosion/sedimentation controls if appropriate (e.g., if extracted groundwater is discharged onto graded or unstable areas).

- Removal/appropriate off-site disposal of surficial materials that are unsuitable to support proposed development (e.g., soils with high organic content susceptible to settlement impacts), and replacement of these materials with engineered fill. Specific materials identified in the geotechnical investigations that may be unsuitable for proposed development and require removal/off-site disposal include undocumented fill, alluvium, highly weathered bedrock, older fan deposits, manure stockpiles and soils with a high concentration of manure. Manure stockpiles and soils with high manure content are associated with previous agricultural activities, with stockpile locations shown on the exhibit located on next page and concentrated soils (although not specifically mapped during site investigation) located in the vicinity of former egg ranch and dairy operations (Refer to the exhibit located in this section). In addition to conformance with identified geotechnical requirements for removal/disposal of unsuitable materials (e.g., appropriate excavation depths and extents based on field direction), a number of BMPs would be implemented in association with these activities, including the use of measures to control erosion/sedimentation (e.g., soil containment devices such as fiber rolls and silt fences) and transport of excavated material (e.g., properly fitted covers on transport vehicles).

- Implementation of asbestos and lead paint surveys during demolition of existing on-site structures, and, if appropriate, use of a licensed contractor to remove and properly dispose of such materials in accordance with associated regulatory requirements.

All of the identified remediation efforts would be conducted during site grading and construction, with specific requirements and timing identified in the project hazardous materials and geotechnical investigations as noted. In addition, a number of these measures are also to be addressed in the project SWPPP (with the SWPPP to be prepared after/in conjunction with completion of final grading plans). Based on completion of the described types of remediation efforts in conformance with applicable regulatory requirements and industry standards, no related effects to long-term water quality conditions would be associated with implementation of the proposed project.

## 4.2 Post-Construction BMPs

Pollutants of concern as noted in section 3.0 will be addressed through three types of BMPs: site design, source control, and treatment control BMPs. The following discussions identify the site design, source control, and treatment control BMPs that are proposed for the project from Sections 4.1 through 4.3 of the County SUSMP. Those Sections describe ten design principles that will be utilized to incorporate the three types of BMPs in the project design. After these ten design principles are discussed, special sections addressing aspects specific to the equestrian areas have also been included (Sections 4.2.7 through 4.2.9).

### 4.2.1 Site Design BMPs

"Site design BMP" means any project design feature that reduces the creation or severity of potential pollutant sources, reduces the alteration of the project site's natural flow regime, or maintains or reduces pre-development erosion and protects stream habitat. Design principles 1 and 2 from the County SUSMP are relevant to site design BMPs. The following text, in bold print, is from the County SUSMP with the response, as it pertains to Harmony Grove Village project, directly following. Please refer to Appendix A for the completed site design and source control tables from the document titled "Storm Water Management Plan for Priority Projects (Major SWMP)".

***Principle 1: Objective: Maintain Pre-Development Rainfall Runoff Characteristics***

The following design guidelines support Principle 1 as described in the County SUSMP; (1) minimize the project's impervious footprint, (2) conserve natural areas, and (3) minimize directly connected impervious areas.

The project is designed to minimize the use of impervious areas. Where possible, natural areas were maintained and the project site will include landscaped areas and the site design will direct runoff across these vegetated areas where feasible. The landscape design will also minimize the use of impervious surfaces and will incorporate native shrubs and drought tolerant trees to maximize canopy interception and water conservation.

The project will reduce directly connected impervious areas by utilizing area drains within landscaped areas surrounding the residential buildings, and directing runoff from parking aisles into landscaped areas wherever feasible.

The project will not significantly alter pre-project drainage patterns. The majority of the project shall drain in a southerly direction to Eden Valley Creek, and then confluence with Escondido Creek at the southern portion of the project (Harmony Grove). The equestrian area located south of Escondido Creek drains to Escondido Creek, maintaining pre-project drainage patterns. Improvements shall be done to the portion of Eden Valley Creek associated with the Harmony Grove Village project.

***Principle 2: Protect Slopes and Channels***

The design guidelines supporting this principle as described in the County SUSMP are intended to decrease the potential for erosion of slopes and/or channels.

The design of the project will incorporate swales, ditches, or storm drain where appropriate to convey runoff from slopes. Energy dissipaters shall be installed at all storm drain outlets and all permanent channel crossings shall be stabilized. In addition, where necessary, slope stabilization and drop structures shall be installed in the on-site portion of Eden Valley Creek. This will allow vegetation to exist. The vegetation in the channel will have water quality benefits.

### 4.2.2 Source Control BMPs

Source control BMPs will consist of measures to reduce the generation of pollutants on-site and reduce the transport of pollutants off-site. Source control BMPs will consist of good housekeeping measures including landscape maintenance, proper materials storage, and waste disposal. Design principles 3 through 7 from the County SUSMP are relevant to source control BMPs. The following text, in bold print, is from the County SUSMP with the response, as it pertains to Harmony Grove Village project, directly following. Please refer to Appendix A for

the completed site design and source control tables from the document titled "Storm Water Management Plan for Priority Projects (Major SWMP)".

***Principle 3: Provide Storm Drain System Stenciling and Signage***

The project owner or the project owner's authorized representative will contact the County of San Diego prior to completing the construction of the inlets to determine the most current stenciling requirements and incorporate that stenciling at all on-site inlets. In addition, signs shall be posted with prohibitive language and/or graphical icons, which prohibit illegal dumping at all public access points along the creek within the project area, trailheads, and parks and building entrances.

***Principle 4: Design Outdoor Materials Storage Areas to Reduce Pollution Introduction***

Improper storage of materials outdoors may increase the potential for toxic compounds, oil and grease, heavy metals nutrients, suspended solids, and other pollutants to enter the urban runoff conveyance system. Where the priority project plans include outdoor areas for storage of hazardous materials that may contribute pollutants to the urban runoff conveyance system, the following storm water BMPs are required:

a.) Hazardous materials with the potential to contaminate urban runoff shall either be:

(1) placed in an enclosure such as, but not limited to, a cabinet shed, or similar structure that prevents contact with runoff or spillage to the storm water conveyance system; or

(2) protected by secondary containment structures such as berms, dikes, or curbs.

b.) The storage area shall be paved and sufficiently impervious to contain leaks and spills.

c.) The storage area shall have a roof or awning to minimize direct precipitation within the secondary containment area.

This shall be done for all areas except for the personal storage areas that are associated with Detached Single-Family Residences. This Priority Project Category is exempt from this requirement.

***Principle 5: Design Trash Storage Areas to Reduce Pollution Introduction***

All outdoor trash container areas will be designed to meet the following requirements, which are described in the County SUSMP (a "trash container area" refers to an area where a trash receptacle or receptacles are located for use as a repository for solid wastes):

a.) Paved surface, designed with an impervious not to allow run-on from adjoining areas, screened or walled to prevent off-site transport of trash;
b.) Provide attached lids on all trash containers that exclude rain, or roof or awning to minimize direct precipitation; and

This shall be done for all areas except for the personal storage areas that are associated with Detached Single-Family Residences. This Priority Project Category is exempt from this requirement.

***Principle 6: Use Efficient Irrigation Systems and Landscape Design***

Irrigation systems for the project will be designed to incorporate the following methods to reduce excessive irrigation runoff, which are described in the County SUSMP, where determined applicable and feasible:

a.) Employing rain shutoff devices to prevent irrigation after precipitation.

b.) Designing irrigation systems to each landscaped area's specific water requirements,

c.) Using flow reducers or shutoff valves triggered by a pressure drop to control water loss in the event of broken sprinkler heads or lines,

d.) Employing other comparable, equally effective, methods to reduce irrigation water runoff,

*e.)* Where feasible, vegetative strips with water quality benefits will be incorporated in pads, driveways and parking areas.

***Principle 7: Incorporate Requirements Applicable to Individual Priority Project Categories***

Where identified in Table 4.2 of the County SUSMP (see Table 4.1 of this report), the requirements applicable to individual priority project categories as described in Section 4.2 of the SUSMP under Principle 7 shall be incorporated during the storm water BMP selection and design process.

The project is in the following priority project categories: "Detached Residential Development", "Attached Residential Development, "Parking Lots", 'Hillside Development", and "Streets, Highways, & Freeways". Priority project category-specific BMPs will be implemented for these priority project categories. The project footprint will also include approximately 25,000 square feet of commercial development. While this is below the threshold area for commercial development (100,000 square feet), the entire project footprint is subject to SUSMP requirements. Table 4.2 of the County SUSMP is reprinted here (Table 4.1) to identify the BMPs applicable to the above-listed priority project categories.

**Table 4.1**
**Standard Storm Water BMP Selection Matrix**

| **Priority Project Category** | Site Design BMPs[1] | Source Control BMPs[2] | Requirements Applicable to Individual Priority Project Categories [3] | | | | | | | | | | |
|---|---|---|---|---|---|---|---|---|---|---|---|---|---|
| | | | a. Private Roads | b. Residential Driveways & Guest Parking | c. Dock Areas | d. Maintenance Bays | e. Vehicle Wash Areas | f. Outdoor Processing Areas | g. Equipment Wash Areas | h. Parking Areas | i. Roadways | j. Fueling Areas | k. Hillside Landscaping |
| Detached Residential Development | R | R | R | R | | | | | | | | | R |
| Attached Residential Development | R | R | R | R | | | | | | | | | R |
| Commercial Development >100,000 $ft^2$ | R | R | | | R | R | R | R | | | | | |
| Automotive Repair Shop | R | R | | | R | R | R | | R | | | R | |
| Restaurants | R | R | | | R | | | | R | | | | |
| Hillside Development > 5,000 $ft^2$ | R | R | R | | | | | | | | | | R |
| Parking Lots | R | R | | | | | | | | R[4] | | | |
| Streets Highways & Freeways | R | R | | | | | | | | | R | | |

R = Required; select one or more applicable and appropriate BMPs from the applicable steps in Section 4.1 &4.2, or equivalent as identified in sections 4.6.1-4.6.3.

(1) Refer to Section 4.1
(2) Refer to Section 4.2
(3) Priority project categories must apply specific storm water BMP requirements, where applicable. Projects are subject to the requirements of all priority project categories that apply
(4) Applies if the paved area totals >5,000 square feet or with >15 parking spaces and is potentially exposed to urban runoff

Source: February 10, 2003 County of San Diego Standard Urban Storm Water Mitigation Plan for Land Development and Public Improvement Projects

Priority project categories must apply specific storm water BMP requirements where applicable. Each required BMP is discussed below.

*Private Roads*

The project will include a number of private alleys that will provide access to residential garages. These alleys are relatively small and will connect directly to the public streets, tying into the storm drain network for inclusion and treatment by the BMPs. In addition to having runoff from private roads be conveyed over landscaped areas (where feasible), treatment control BMPs (see section 4.2.3) will treat the runoff in the storm drain network.

*Residential Driveways & Guest Parking*

In addition to having runoff from residential driveways and guest parking be conveyed over landscaped areas (where feasible), treatment control BMPs will be incorporated in the tributary storm drain systems that are collecting runoff from driveways and parking areas (see Section 4.2.3 titled, *Treatment Control BMPs*).

*Dock Areas*

The project will not include any loading dock areas. The project will include a general store which will receive deliveries. Loading and unloading will take place in the parking aisles. Treatment control BMPs will be incorporated in the tributary storm drain systems that are collecting runoff parking areas where draining to landscaping is not feasible (see Section 4.2.3 titled, *Treatment Control BMPs*).

*Maintenance Bays*

The project will not include any maintenance bays. Therefore this category-specific BMP is not applicable for the project.

*Vehicle Wash Areas*

The project will not include any vehicle wash areas. Therefore this category-specific BMP is not applicable for the project.

*Outdoor Processing Areas*

The project will not include any outdoor processing areas. Therefore this category-specific BMP is not applicable for the project.

*Equipment Wash Areas*

The project will not include any outdoor processing areas. Therefore this category-specific BMP is not applicable for the project.

*Parking Areas*

In addition to having runoff from parking areas be conveyed over landscaped areas (where feasible), treatment control BMPs will be incorporated in the tributary storm drain systems that are collecting runoff from parking areas (see Section 4.2.3 titled, *Treatment Control BMPs*, below).

*Hillside Landscaping*

Hillside areas shall be landscaped with deep-rooted, drought tolerant plant species selected for erosion control, satisfactory to the County.

*Fueling Area*

The project will not include any outdoor processing areas. Therefore this category-specific BMP is not applicable for the project.

### 4.2.3 Treatment Control BMPs

"Treatment Control (Structural) BMP" means any engineered system designed and constructed to remove pollutants from urban runoff. Pollutant removal is achieved by simple gravity settling of particulate pollutants, filtration, biological uptake, media adsorption or any other physical, biological, or chemical process.

Design principles 8 through 10 from the County SUSMP are relevant to treatment control BMPs. The following text, in bold print, is from the County SUSMP with the response, as it pertains to Harmony Grove Village project, directly following.

Design principles 8 through 10 from the County SUSMP are relevant to treatment control BMPs.

***Principle 8: Design to Treatment Control BMP Standards***

Treatment control BMPs for the project will be designed to meet the following numeric sizing criteria from Section 4.3 of the County SUSMP as instructed in Principle 8. For the flow-based BMPs, a rainfall intensity value of 0.2 inch of rainfall per hour will be used to calculate the treatment flows. However, for the volume based BMPs, a value of 0.76 inches will be used to calculate treatment volumes based on the June 27, 2001 exhibit titled "85$^{th}$ Percentile Precipitation Isopluvial Map, Rainfall in Inches", (see Appendix D). Preliminary calculations for the required treatment flows were performed for the bio-filtration swales, and Hydrodynamic Separators provided in Appendix B. In addition water quality preliminary calculations for the required treatment volume were performed for the basins provided in Appendix B.

The locations of the treatment control BMPs for the project are shown on the exhibit titled, *Storm Water Management Plan Exhibit for Harmony Grove Village*, located in Map Pocket 1. The following is a discussion of the proposed treatment BMPs for each drainage basin:

> Drainage Basin 100 is located in the far north west corner as shown on the exhibit titled, *Storm Water Management Plan Exhibit for Harmony Grove Village*, located in Map Pocket 1. This area will consist of medium density residential area. In addition to the site design and source control BMPs discussed earlier in section 4.2.1 and 4.2.2, the project proposes a Hydrodynamic Separator, and a water quality basin. The Hydrodynamic Separator will be installed upstream of the water quality basin. The installation of the Hydrodynamic Separator, in addition to removing other pollutants, will remove trash and debris from the storm drain system thus removing the large pollutants

that may hinder the outlet works of the water quality basin. The Hydrodynamic Separator will be numerically sized per the flow-based requirements as stated in the SUSMP. The water quality basin will be numerically sized per the volume-based requirements as stated in the SUSMP.

Drainage Basin 500 is located directly south of Drainage Basin 100 and will consist of high- and medium-density residential area. In addition to the site design and source control BMPs discussed earlier in section 4.2.1 and 4.2.2, the project proposes a Hydrodynamic Separator and a water quality basin. The Hydrodynamic Separator will be installed immediately upstream of the water quality basin. The installation of the hydrodynamic separator in addition to removing other pollutants will remove trash and debris from the storm drain system thus removing the large pollutants that may hinder the outlet works of the water quality basin. The Hydrodynamic Separator will be numerically sized per the flow-based requirements as stated in the SUSMP. The water quality basin will be numerically sized per the volume-based requirements as stated in the SUSMP.

Drainage Basin 1000 is located south east of Drainage Basin 100 and Drainage Basin 500. Drainage Basin 1000 is comprised of the central portion of the project north of Escondido Creek and will consist of high- and medium-density residential area. This central drainage basin proposes a network of storm drain systems that will be designed to convey the 100-year storm. In addition, there will also be a parallel low flow system that will convey the water quality treatment flow rates to the water quality basins. Prior to the 100-year storm drain systems outleting to Eden Valley Creek, the flows will be routed though a Hydrodynamic Separator. Once the flows pass through the Hydrodynamic Separator they will encounter a diversion box. Please see SWMP exhibit for the detail of the diversion box. The diversion box will allow the larger storm events to pass into the naturally vegetated channelized portion of Eden Valley Creek. However, during the smaller storm events the water quality treatment flows will be conveyed into a low flow system that will ultimately outlet to one of two water quality basins located at the southern portion of the drainage basin. In summary, the Hydrodynamic Separator is to

remove the trash and debris so the low flow system and the water quality basin can function efficiently. There will be a total of twelve Hydrodynamic Separators, twelve diversion boxes and two water quality basins that serve this drainage basin. The Hydrodynamic Separators and the low flow systems will be numerically sized per the flow-based requirements as stated in the SUSMP. Upon submittal of the tentative map, detailed analyses will be performed to adequately size the twelve Hydrodynamic Separators. The water quality basins and the low flow systems will be numerically size per the volume-based requirements as stated in the SUSMP.

Drainage Basin 1400 is located east of Drainage Basin 1000. This area will consist of high-density residential area. In addition to the site design and source control BMPs, the water will drain to a Hydrodynamic Separator which is located in the easterly low point of the road. The Hydrodynamic Separator will be numerically sized per the flow-based requirements as stated in the SUSMP.

Drainage Basin EQ1 and EQ2 is directly south of Drainage Basin 1000 but still north of Escondido Creek. Drainage Basin EQ1 is directly west of EQ2. These areas are proposed day use equestrian facilities. In addition to the site design and source control BMPs, all the water from these two basins will be treated by enhanced bio-filtration swales before going into Escondido Creek. Please refer to section 4.2.8 for information on the enhanced bio-filtration. The Bio-filtration swales will be numerically sized per the flow-based requirements as stated in the SUSMP. The BMPs for the equestrian area are further discussed in section 4.2.7 and 4.2.8.

Drainage Basin 1100 is located directly south east of Escondido Creek and this area will consist of a boarding facility for the equestrian area. In addition to the site design and source control BMPs, all the water will travel northerly and be treated with enhanced bio-filtration swales before going into Escondido Creek. The Bio-filtration swales will be numerically sized per the flow-based requirements as stated in the SUSMP. The BMPs for the equestrian area are further discussed in section 4.2.7 and 4.2.8.

Drainage Basin 1200 is directly west of Drainage Basin 1100 and will consist of horse stalls. In addition to the site design and source control BMPs, there will be a water quality basin that is treating the runoff, located in the southwestern portion of the drainage basin. The BMPs for the equestrian area are further discussed in section 4.2.7 and 4.2.8.

Table 4.2 is the treatment volume- and flow-based calculations for each drainage basin.

**Table 4.2**
**Summary of Water Quality Volume Calculations**

| Water Quality Basins | Tributary Area (acres) | $V_{WQ}$ (acre-foot) |
|---|---|---|
| 100 | 61.2 | 2.9 |
| 500 | 14.5 | 0.7 |
| 1000A | 166.7 | 7.9 |
| 1000B | 97.6 | 4.6 |
| 1200 | 9.8 | 0.5 |

$V_{WQ}$ = Water Quality Volume

**Table 4.3**
**Summary of Water Quality Flow Rate Calculations**

| Water Quality Basins | Tributary Area (acres) | $Q_{WQ}$ (cfs) |
|---|---|---|
| 100 | 61.2 | 9.2 |
| 500 | 14.5 | 2.2 |
| 1000-A | 46.6 | 7.0 |
| 1000-B | 48.6 | 7.3 |
| 1000-C | 11.1 | 1.7 |
| 1000-D | 25.9 | 3.9 |
| 1000-E | 11.6 | 1.7 |
| 1000-F | 31.8 | 4.8 |
| 1000-G | 18.1 | 2.7 |
| 1000-H | 20.0 | 3.0 |
| 1000-I | 20.6 | 3.1 |
| 1000-J | 7.1 | 1.1 |
| 1000-K | 13.1 | 2.0 |
| 1000-L | 9.8 | 1.5 |
| 1400 | 27.9 | 4.2 |

cfs = cubic feet per second
$Q_{WQ}$ = Water Quality Flowrate

***Principle 9: Locate BMPs Near Pollutant Sources***

All structural treatment control BMPs for the project will be located on-site. Therefore runoff will be treated prior to discharging to receiving waters. The locations of structural treatment control BMPs for the project are shown on the exhibit titled, *Storm Water Management Plan Exhibit for Harmony Grove Village*, located in Map Pocket 1. Each structural treatment control BMP will be designed to comply with the design standards of Principle 8 (above). There are no shared BMPs with other developments.

***Principle 10: Restrictions on Use of Infiltration BMPs***

No infiltration BMPs are proposed for the project. Therefore the design standards of this principle do not apply to this project.

**4.2.4Treatment Control BMP Selection Process**

Priority projects shall implement a combination of storm water BMPs that will remove anticipated pollutants of concern, as identified by the procedure in Chapter 3 of the County SUSMP, in site runoff to the maximum extent practicable. The procedure in Chapter 3 of the County SUSMP prioritizes pollutants for selection of treatment measures. The procedure in Chapter 3 of the County SUSMP is discussed in Section 3 of this SWMP. As discussed in Section 3 of this SWMP, no primary pollutants of concern were identified. The following secondary pollutants of concern were identified: sediments, nutrients, heavy metals, organic compounds, trash and debris, oxygen demanding substances, oil and grease, bacteria and viruses, and pesticides. The project will implement source control, site design, and treatment control BMPs to reduce the generation of these pollutants on-site and reduce the transport of these pollutants off-site. Table 4.3 of the County SUSMP is reprinted below as Table 4.4 to identify the BMPs applicable to the above-listed priority project categories in Table 4.1.

**Table 4.4**
**Treatment Control BMP Selection Matrix**

| *Pollutant of Concern* | *Treatment Control BMP Categories* | | | | | | |
|---|---|---|---|---|---|---|---|
| | Biofilters | Detention Basins | Infiltration Basins (2) | Wet Ponds or Wetlands | Drainage Inserts | Filtration | Hydrodynamic Separator Systems (3) |
| Sediment | M | H | H | H | L | H | M |
| Nutrients | L | M | M | M | L | M | L |
| Heavy Metals | M | M | M | H | L | H | L |
| Organic Compounds | U | U | U | M | L | M | L |
| Trash & Debris | L | H | U | H | M | H | M |
| Oxygen Demanding Substances | L | M | M | M | L | M | L |
| Bacteria | U | U | H | H | L | M | L |
| Oil & Grease | M | M | U | U | L | H | L |
| Pesticides | U | U | U | L | L | U | L |

(1) Copermittees are encouraged to periodically assess the performance characteristics of many of these BMPs to updates this table.
(2) Including trenches and porous pavement.
(3) Also known as hydrodynamic devices and baffle boxes.

L: Low removal efficiency):
M: Medium removal efficiency):
H: High removal efficiency):
U: Unknown removal efficiency

Sources: *Guidance Specifying Management Measures for Sources of Nonpoint Pollution in Coastal Waters (1993), National Stormwater Best Management Practices Database (2001), Guide for BMP Selection in Urban Developed Areas (2001), and Caltrans New Technology Report (2001).*

In addition to site design and source control BMPs described in section 4.2.1 and 4.2.2. Hydrodynamic Separators, water quality basins, and grass/bio-filtration swales will be incorporated. Please refer to the exhibit titled, *Storm Water Management Plan Exhibit for Harmony Grove Village*, located in Map Pocket 1, for location of BMPs. The following two sections 4.2.5 and 4.2.6, explains why or why not a BMP was chosen for this project.

### 4.2.5 BMPs Selected for Harmony Grove Village Project (Excluding Equestrian Facilities)

- Biofilters – Bio-filtration is a process that uses vegetation for the purpose of slowing water velocity and filtering out pollutants. Bio-retention areas are landscape features that typically consist of a grass buffer strip, sand bed, ponding area, organic layer or mulch layer, planting soil, and plants. Storm water runoff is treated through a variety of physical, biological, and chemical treatment processes.

Biofiltration was selected as one of the treatment BMPs for the Harmony Grove Village in drainage basin EQ1, EQ2 and 1100. Bio-filtration swales are open, shallow channels with vegetation covering the side slopes and bottom that collect and slowly convey runoff to downstream discharge points. They are designed to treat runoff through filtering by the vegetation in the swale and filtering through a subsoil matrix. Swales trap particulate pollutants (suspended solids and trace metals), promote infiltration, and reduce the flow velocity of storm water runoff. The drainage area and location of the proposed bio-filtration swale are shown on the workmap provided in Map Pocket 1. In addition to the treatment control Bio-filtration swales, there is source control vegetative swales on pads (where feasible) which are not numerically sized but do have water quality benefits.

- Water Quality Basins - Extended detention basins have outlets that are designed to detain storm water runoff from a water quality design storm for a minimum period of time (e.g., 24 hours) to allow particles and associated pollutants to settle out. The required volume of an extended detention basin is calculated based on the runoff coefficient, depth of rainfall, and drainage area.

Water Quality Basins was selected as one of the treatment BMPs for the Harmony Grove Village in Drainage Basin 100, 500, 1000 and 1200. Water quality basins are Dry extended detention ponds (a.k.a. dry ponds, extended detention basins, detention ponds) whose outlet have been designed to detain the storm water runoff from a water quality design storm for some minimum

time (e.g.. 48 hours) to allow particles and associated pollutants to settle. Unlike wet ponds, these facilities do not provide flood control by including additional flood detention storage. They are designed to treat runoff through sedimentation of toxic particulate pollutants (suspended solids and trace metals). They also provide significant control over channel erosion by reducing flow velocity of storm water runoff. The drainage area and location of the proposed water quality basins are shown on the workmap provided in Map Pocket 1.

- Hydrodynamic Separator Systems – Hydrodynamic separators are flow-through structures with a settling or separation unit that removes sediment and other pollutants. No outside power source is required because the energy of the flowing storm water allows the sediment to efficiently settle out.

Hydrodynamic Separators was selected as one of the treatment BMPs for the Harmony Grove Village in Drainage Basin 100, 500, 1000, and 1400. Hydrodynamic Separators have water move in a centrifugal fashion before exiting. By having the water move in a circular fashion rather than a straight line as in the case with a standard wet vault, it is possible to obtain significant removal of suspended sediments and attached pollutants with less space. They are designed to treat runoff with the removal of sediment, trash and debris. The proposed Hydrodynamic Separators are shown on the workmap provided in Map Pocket 1.

### 4.2.6 BMPs Not Selected for Harmony Grove Village Project (Excluding Equestrian Facilities)

- Infiltration Basins - Infiltration basins are basins in which the majority of runoff from a water quality design storm is infiltrated into the soil rather than discharged to a surface water body. Infiltration basins are volume-based, but also have surface area restrictions that are based on volume, hydraulic conductivity, and drawdown time. In addition, infiltration basins are limited to areas with highly permeable soils and areas where the groundwater table is at least 10 feet below the ground surface.

Infiltration was not selected for Harmony Grove Village project because the project site consists of soil type D, which is not appropriate for infiltration.

- Wet Ponds or Wetlands – Wet ponds and constructed wetlands are basins that temporarily retain storm water runoff and maintain a permanent pool. Pollutant removal is achieved by biological uptake of pollutants, filtration by vegetation and constructed wetlands by soil, and settling. Wet ponds are volume-based, and the required water quality volume is three times that of extended detention basins due the permanent pool.

Wet ponds were not selected for the Harmony Grove Village project because the soils report determined that shallow groundwater exists on site

- Drainage Inserts – Drainage inserts are manufactured filters or fabric placed in a drop inlet to remove trash and debris. There are a multitude of inserts of various shapes and configurations. Pollutant removal is achieved usually by a wire or plastic mesh to collect trash and debris.

Drainage inserts were not selected for the Harmony Grove Village project to treat runoff. The majority of the project will be treated for trash and debris with Hydrodynamic Separators; therefore drainage inserts are not necessary.

### 4.2.7 Equestrian Facility BMPs

Due to the equestrian area being so near to the Escondido Creek floodplain, special focus is being placed on specific BMPs for this area to ensure that water quality will not be adversely impacted. Water quality swales will be used to allow for the runoff to undergo treatment prior to discharging into Escondido Creek. Some aspects of the equine specific BMPs are addressed in the County SUSMP; however, further clarification of these issues is described below to help ensure a drier barnyard, better working conditions, and an all-around healthier environment.

*1) Runoff Best Management Practices.*

a) Roof Runoff Related BMPs- roof runoff will be directed away from high-use, bare, unvegetated, and manure storage areas with the use of gutters, downspouts, or subsurface drains.

b) Facility Runoff Related BMPs- all reasonable measures will be incorporated to prevent and minimize the runoff that comes in contact with metals (associated with parking lots in the day use equestrian areas), manure, bedding, or feed debris. Measures will include, but are not limited to:

i) Separate barnyards, paddocks, and manure storage areas from waterways with buffer strips of vegetation to filter sediment metals (associated with parking lots in the day use equestrian areas) and any nutrients in the runoff.

ii) Divert surface runoff around areas containing pollutants by constructing berms, ditches, or underground pipelines.

iii) Maintain vegetation and replant bare areas.

iv) Control potential runoff from water troughs with automatic waterers.

*2) Erosion Control-Related BMPs*

a) Horse-Specific Related BMPs

i) Restrict horse access and human activity in wetlands, creeks, and steep hillsides.

ii) Keep areas well vegetated and restore bare areas with vegetation.

iii) Manage pastures to prevent heavy grazing and allow the grass to re-grow.

iv) Maintain vegetated strips downslope of bare areas (i.e. Paddocks, turnouts) to trap sediment.

b) Site Drainage Related BMPs

i) Maintain culverts and ditches by controlling upslope erosion.

ii) Keep ditches vegetated with grass to help maintain stability and capture sediment.

iii) Keep all inlets clear- check regularly.

c) Slope Stabilization Related BMPs

i) Watch for accelerated erosion on steep slopes, pastures, gullies, and intensively used horse areas.

ii) Stabilize slopes with vegetation or other applicable erosion control measures.

3) *Bacteria / Nutrient Transportation Prevention BMPs.*

a) Water quality and vegetated swales will be incorporated to treat the runoff prior to discharging into Escondido Creek.

b) Manure will be removed twice daily, seven days per week in stalls, corrals, and wash areas. Paddocks will be cleaned at least once daily.

c) Manure will be stored in a commercial roll-off dumpster, and removed and emptied twice each week.

d) Manure storage will be on an impervious surface and under covering to prevent leaching or runoff of pollutants, and either be raised or otherwise protected from surface water.

e) Stalls will consist of decomposed granite floor base, with ¾" rubber mats completely covering the dirt. Bedding for the horses will consist of 8" to 10" of pine shavings.

i) Pine shavings absorb all moisture and odor and are disposed with manure.

ii) Clean shavings will be replaced daily.

f) The corral will consist of decomposed granite floor base, covered by ½" asphalt felt and again layered with decomposed granite. This will then be covered with approximately 4" of rice hulls for bedding.

i) The rice hulls will maintain a 4" cover, and completely absorb moisture, allowing for easy waste removal.

ii) Corrals will be completely covered.

g) The equine wash area will be isolated from and impervious to its surroundings by elevating it above the surrounding ground and keeping it enclosed.

h) Use of horse grooming and health products will adhere strictly to product instructions, precautions, and recommended amounts, with all spills being cleaned up properly.

4) *General Housekeeping BMPs*

a) Native vegetation will be used in bare areas so fertilizers will not be needed.

b) All horse housing areas will be equipped with an extensive fly control system

i) System automatically releases a nontoxic, environmentally friendly, natural flying insect killer.

ii) All insects that breathe through their skin will be eliminated.

c) Feed and feed supplements will be kept in a specific room inside metal, tightly covered cans.

i) This will eliminate the chance for pests or rodents to get into the feed.

d) Pesticide and Fertilizer management plan.

i) Use physical control to eliminate pest from the garden rather them pesticide

(1) Wipe off small colonies by using gloved hands.

(2) Barriers

(3) Vacuuming

(4) Cleanliness

(5) Caulking holes

(6) Traps

ii) When physical control is not working try using Biological control

(1) Predatoral insects

(2) Bacterial insecticide

iii) Less Chemical Control

(1) Dehydrating dust

(2) Insecticidal soaps

(3) Boric acid powder

(4) Horticultural oils

(5) Pyrethrin – based insecticides

(6) Insect growth Regulators

Risk of various aquatic viral and bacterial contaminations will be virtually eliminated.

### 4.2.8 BMPs Selected for the Equestrian Facility in Harmony Grove Village

- Biofilters – Bio-filtration is a process that uses vegetation for the purpose of slowing water velocity and filtering out pollutants. Bio-retention areas are landscape features that typically consist of a grass buffer strip, sand bed, ponding area, organic layer or mulch layer, planting soil, and plants. Storm water runoff is treated through a variety of physical, biological, and chemical treatment processes. The minimum contact time (residence time) is for at least 10 minutes.
- Enhanced bio-filtration utilized a check-dam (speed bumps) and wide depressions to increase runoff and promote greater setting of pollutants. The dam will hold back the runoff which will help significantly exceed the contact time (residence time) and increase infiltration.

Enhanced bio-filtration was selected as one of the treatment BMPs for the equestrian area in drainage basin EQ1, EQ2 and 1100. Enhanced bio-filtration–swales are open, shallow channels with vegetation covering the side slopes and bottom that collect and slowly convey runoff to downstream discharge points. Enhanced bio-filtration have a plank of red wood

acting as a dam, placed periodically throughout the length of the swale including the discharge point, to detain the runoff in order to prolong the contact time and help promote greater settling of pollutants. Enhanced bio-filtration is designed to treat runoff through filtering by the vegetation in the swale and filtering through a subsoil matrix. Swales trap particulate pollutants (suspended solids and trace metals), promote infiltration, and reduce the flow velocity of storm water runoff. The drainage area and location of the proposed enhanced bio-filtration swales are shown on the workmap provided in Map Pocket 1. In addition to the treatment control enhanced bio-filtration swales, there are vegetated buffer strips (where feasible) that help treat the pollutants generated from parking lots associated with the day use equestrian facility. The buffer strips are not numerically sized but do have water quality benefits.

- Water Quality Basins - Extended detention basins have outlets that are designed to detain storm water runoff from a water quality design storm for a minimum period of time (e.g., 24 hours) to allow particles and associated pollutants to settle out. The required volume of an extended detention basin is calculated based on the runoff coefficient, depth of rainfall, and drainage area.

Water Quality Basins was selected as one of the treatment BMPs for the equestrian area in Drainage Basin 1200. Water quality basins are Dry extended detention ponds (a.k.a. dry ponds, extended detention basins, detention ponds) whose outlet have been designed to detain the storm water runoff from a water quality design storm for some minimum time (e.g.. 48 hours) to allow particles and associated pollutants to settle. Unlike wet ponds, these facilities do not provide flood control by including additional flood detention storage. They are designed to treat runoff through sedimentation of toxic particulate pollutants (suspended solids and trace metals). They also provide significant control over channel erosion by reducing flow velocity of storm water runoff. The drainage area and location of the proposed water quality basins are shown on the workmap provided in Map Pocket 1.

### 4.2.9 BMPs Not Selected for the Equestrian Facility in Harmony Grove Village

The equestrian area will have an aggressive source control BMPs. For further clarification of the source control BMPs, please refer to section 4.2.7 of this SWMP. This will help significantly reduce the anticipated pollutants typical of an equestrian facility such as nutrients, organic compounds, oxygen demanding substances, pesticides, bacteria and viruses

- Hydrodynamic Separator Systems – Hydrodynamic separators are flow-through structures with a settling or separation unit that removes sediment and other pollutants. No outside power source is required because the energy of the flowing storm water allows the sediment to efficiently settle out.

  Hydrodynamic Separators was not selected as one of the treatment BMPs for the equestrian area in Harmony Grove Village because there is already aggressive source control BMPs and the enhanced bio-filtration swales will treat the runoff. The equestrian area does not have a storm drain system proposed in which to install hydrodynamic separators. Overall the pollutant efficiency removal rates (per Table 4.3 of the SUSMP) for bio-filtration are higher then the efficiency removal rates of the hydrodynamic separators.

- Infiltration Basins - Infiltration basins are basins in which the majority of runoff from a water quality design storm is infiltrated into the soil rather than discharged to a surface water body. Infiltration basins are volume-based, but also have surface area restrictions that are based on volume, hydraulic conductivity, and drawdown time. In addition, infiltration basins are limited to areas with highly permeable soils and areas where the groundwater table is at least 10 feet below the ground surface.

  Infiltration was not selected for the equestrian area for Harmony Grove Village project because there are aggressive source control BMPs, a water quality basin and enhanced bio-filtration swales proposed for this area.

- Wet Ponds or Wetlands – Wet ponds and constructed wetlands are basins that temporarily retain storm water runoff and maintain a permanent pool. Pollutant removal is achieved by biological uptake of pollutants, filtration by vegetation and constructed wetlands by soil, and settling. Wet ponds are volume-based, and the required water quality volume is three times that of extended detention basins due the permanent pool.

  Wet ponds were not selected for the equestrian area for Harmony Grove Village project because the soils report determined that shallow groundwater exists on site. In addition, there are aggressive source control BMPs, a water quality basin, and enhanced bio-filtration swales proposed for this area.

- Drainage Inserts – Drainage inserts are manufactured filters or fabric placed in a drop inlet to remove trash and debris. There are a multitude of inserts of various shapes and configurations. Pollutant removal is achieved usually by a wire or plastic mesh to collect trash and debris.

  Drainage inserts were not selected for the Harmony Grove Village project to treat runoff. The majority equestrian area does not have storm drains to place inserts. The majority of the equestrian areas will be treated for trash and debris with aggressive source control management, water quality basin and the enhanced bio-filtration swales and where feasible vegetative buffer strips with water quality benefits will be applied. Overall the pollutant efficiency removal rates (per Table 4.3 of the SUSMP) for bio-filtration are higher then the efficiency removal rates of the drainage inserts.

## 5.0 OPERATION AND MAINTENANCE PROGRAM

In addition to the operation and maintenance procedures outlined below for the treatment control BMPs, other routine maintenance requirements required for the site are good housekeeping measures and landscape maintenance. Literature is included in Appendix C to identify the costs and characteristics associated with specific devices. Appendix E contains information on the estimated operation and maintenance costs for the BMPs associated with Harmony Grove. The information in Appendix E is directly from Appendix H of the County of San Diego SUSMP. Since this project is still in the tentative map phase, no manufacturers or specific devices have yet been decided upon, and therefore the information in Appendix C is for only for general estimation.

### 5.1 Hydrodynamic Separators Maintenance Activities

The frequency of maintenance required is site and drainage area specific. The treatment control BMPs should be inspected periodically to assure their condition is adequate to handle anticipated runoff. Initially following the installation of new treatment control BMPs, it is important to check that they are functioning properly and measure the amount of deposition occurring from specific storm events. At a minimum, during the rainy season while the project is still under construction, inspections should be made on a monthly basis to check that the treatment control BMPs are functioning properly and whether they require servicing at that time. Once construction is complete, and site is stabilized, it is recommended that these BMPs be maintained at least 4 times a year.

The maintenance procedure for servicing Hydrodynamic Separators typically includes contracting the maintenance cleaning/waste removal through a provider of those services. Manufacturers often offer servicing for their own facilities, however, maintenance services are also offered through a variety of other manufacturers and cleaners as well.

## 5.2 Grass/Bio-Filtration Swale Maintenance Activities

The frequency of maintenance required is site and drainage area specific. During the construction of the project, all landscape areas will be inspected on a monthly base and maintained as needed. Once construction is complete, and site is stabilized, it is recommended that these BMPs be maintained at least 4 times a year. Landscape maintenance will include mowing and trimming vegetation, removal of trash and vegetative debris, correcting drainage problems such as standing water, and repair/revegetation of any eroded areas. All landscape maintenance activities will be provided on an as-needed basis for aesthetic and functional maintenance. Drainage problems such as standing water that may contribute to the development of aquatic plant communities or mosquito-breeding areas will be corrected immediately to drain the standing water. If additional work is needed to provide a permanent solution to prevent standing water, the work will be provided within 10 days or prior to the next forecasted storm event, whichever is sooner. Where any factors have created erosive conditions (such as pedestrian traffic, concentrated flow, animal burrows, etc.), corrective steps will be taken to prevent loss of soil and/or transport of soil off-site. Eroded areas that may contribute sediment to the drainage channel will be corrected within 10 days or prior to the next forecasted storm event, whichever is sooner. If necessary, designers or engineers will be consulted to address drainage or erosion problems.

## 5.3 Detention/Water Quality Basin Maintenance Activities

The frequency of maintenance required is site and drainage area specific. The two detention basins associated with Harmony Grove Village contain a volume that allows for the detention of the 2-, 10-, and 100- year storm. It has been determined that there is an existing downstream condition of concern associated with Escondido Creek, and per the County SUSMP detention is required. The detention basins are not water quality basins and therefore not designed to meet the numeric sizing criteria per the County SUSMP. However, incidental water quality benefits will occur. Maintenance of these basins is necessary to ensure that these structures function for the life of this project. Because of these reasons the detention basins have been included in this report.

During the construction of the project, inspections and necessary maintenance should be made on a monthly base. Once construction is complete, and the site is stabilized, it is recommended that the detention/water quality basins shall be inspected at least 4 times a year (quarterly). The inlet and outlet of the detention/water quality basin shall be inspected for trash litter, debris, or other solid materials that may hinder their intended function.

The maintenance procedure for servicing the proposed detention/water quality basins consists of mostly sediment, trash, litter, and debris removal. In addition, regards to vegetation management shall have to be taken into consideration. Typical activities include:

1) Inspection for standing water, slope stability, sediment accumulation, trash and debris, and presence of burrows.
2) Remove accumulated trash and debris in the basin and around the outlet during the inspections. The frequency of the activity may be altered to meet specific site conditions.
3) Trim vegetation, as necessary, and inspect quarterly to prevent establishment of woody vegetation and for aesthetic and vector reasons.
4) Remove accumulated sediment and re-grade when the accumulated sediment volume exceeds 10 percent of the basin volume. Inspect the basin for accumulated sediment volume.

## 5.4 Site Design and Source Control Operation and Maintenance Activities

The ongoing operation and maintenance procedures for the Site Design and Source Control BMPs as described in section 4.2.1, 4.2.2, and 4.2.7, will be transferred to an established POA. The following describes the operation and maintenance procedures:

In regards to Principle 2, swales, ditches and or storm drain will be clear from debris and obstructions to convey runoff from slops. They will be inspected quarterly and after any major rainfall to ensure that all swales, ditches and/or storm drains are working properly.

In regards to Principle 3, stencils and signs will be inspected quarterly, for legibility and clarity due to fading over a period of time, vandalism and/or graffiti. The stencils and signs will be replaced/repaired as necessary.

In regards to Principle 4, a quarterly inspection will be employed to ensure that all hazardous materials are properly stored in areas with a roof/cover or awning. This is to ensure that the potential for toxic compounds and other pollutants do not enter the urban runoff conveyance system. In addition, the roofing or awning will be inspected quarterly for leaks. (Detached single family is exempt from this requirement).

In regards to Principle 5, all outdoor trash container areas will be inspected quarterly to ensure that the lids of trash containers are attached properly without cracks. This will prevent direct contact with precipitation. (Personal storage areas associated with detached single family land use is exempt from this requirement).

In regards to Principle 6, where feasible, the runoff from residential pads, driveways and parking areas will drain to vegetative strips (landscaped areas located in the front yard). There will be a quarterly inspection on these vegetative strips to ensure that they are still alive and re-vegetate when necessary. In addition, an inspection of the shutoff devices (triggered by a pressure drop in an event that the sprinkler head or line breaks) will be employed quarterly, to ensure that they work properly. The shutoff devices will be repaired/replaced as necessary. This will ensure that vegetative areas are being properly maintained, irrigated, and drained.

## 6.0 FISCAL RESOURCES

The site design and source control BMPs (As discussed in section 4.2.1, 4.2.2 and 4.2.7) will be provided for a portion of the project site are First Category BMPs. Section 5.2 of the County SUSMP describes first category BMPs as BMPs that inherently "take care of themselves", by that it is meant that the established Property Owners Association (POA) is expected to do so as an incident of taking care of the property. Based on Section 5.2 of the County SUSMP, no funding security is required to be provided to the County.

The treatment control BMPs (Grass/bio-filtration swales, water quality basin and Hydrodynamic Separators) that are proposed for various locations throughout the property as shown on the exhibit titled, *Storm Water Management Plan Exhibit for Harmony Grove Village*, provided in Map Pocket 1, are second Category BMPs. It was determined that the Property Owners Association (POA) will take primary responsibility for the maintenance of these BMPs. Section 5.2 of the County SUSMP describes Second Category BMPs as BMPs for which the County needs to assure on-going maintenance. The nature of the proposed BMPs indicates that it is appropriate for the Property Owners Association to be given primary responsibility for maintenance, on a perpetual basis (unless a storm water utility is eventually formed). However the County (in a "backup" roles) need to be able to step in and perform the maintenance if property owner fails, and need security to provide funding for such backup maintenance. Security for "Backup" maintenance after interim period (5 years) would not be provided, however primary owner maintenance responsibility would remain. The primary funding for the "backup" maintenance (interim period of 5 years) will be a security deposit from the developer to substantiate the maintenance agreement. The amount of the security would equal the estimated cost of 2 years of maintenance activities. The Security can be a CASH Deposit, Letter of Credit or other form acceptable to the County. Prior to the recordation of the final design map, the two year security deposit will be provide for maintaining the 2 detention basins, 5 water quality basins, 15 Hydrodynamic separators, and 3 enhanced grass/biofiltration swales. Please see Appendix E for a cost estimate of a 2-year maintenance program for these BMPs.

The Property Owner Association will keep inspection and maintenance records for all BMPs associated with this project.

## 7.0 SUMMARY/CONCLUSIONS

This Stormwater Management Plan and Stormwater Maintenance Plan (SWMP) has been prepared in accordance with the Watershed Protection, Stormwater Management, and Discharge Control Ordinance and the Stormwater Standards Manual. This SWMP has evaluated and addressed the potential pollutants associated with this project and their effects on water quality. A summary of the facts and findings associated with this project and the measures addressed by this SWMP is as follows:

- The beneficial uses for the receiving waters have been identified. The project is not expected to affect the beneficial uses for the receiving waters.
- The project will not significantly alter drainage patterns on the site. The discharge points will not be changed. In addition, the project has two proposed detention basins to detain the 2-, 10- and 100-year storm events. As a result, the post-project flow rates at the downstream portion of the project are less than pre-project flow rates for the 2-, 10- and 100-year storm events.
- The majority of the project site has been designed to incorporate site design and source control BMPs in order to reduce the quantity of runoff required to be treated by structural treatment control BMPs. Portions of the project site (where feasible) have been designed to drain to landscaped areas prior to collection in the storm drain system.
- In addition to the site design and source control BMPs, treatment control BMPs will be incorporated throughout the project site.
- The proposed construction and post-construction BMPs address mitigation measures to protect water quality and protection of water quality objectives and beneficial uses to the maximum extent practicable.
- The equestrian facilities shall employ enhanced bio-filtration swales and very stringent good housekeeping practices, site and source control BMPs.

## 8.0 CERTIFICATION PAGE

This Stormwater Management Plan and Stormwater Maintenance Plan (SWMP) has been prepared under the direction of the following Registered Civil Engineer. The Registered Civil Engineer attests to the technical information contained herein and the engineering data upon which recommendations, conclusions, and decisions are based.

Dennis C. Bowling, M.S.
R.C.E. #32888, Exp. 06/06
Principal

3/28/06
Date

# APPENDIX A

## Excerpts from the September 8, 1994 report titled,

## *Water Quality Control Plan for the San Diego Basin*

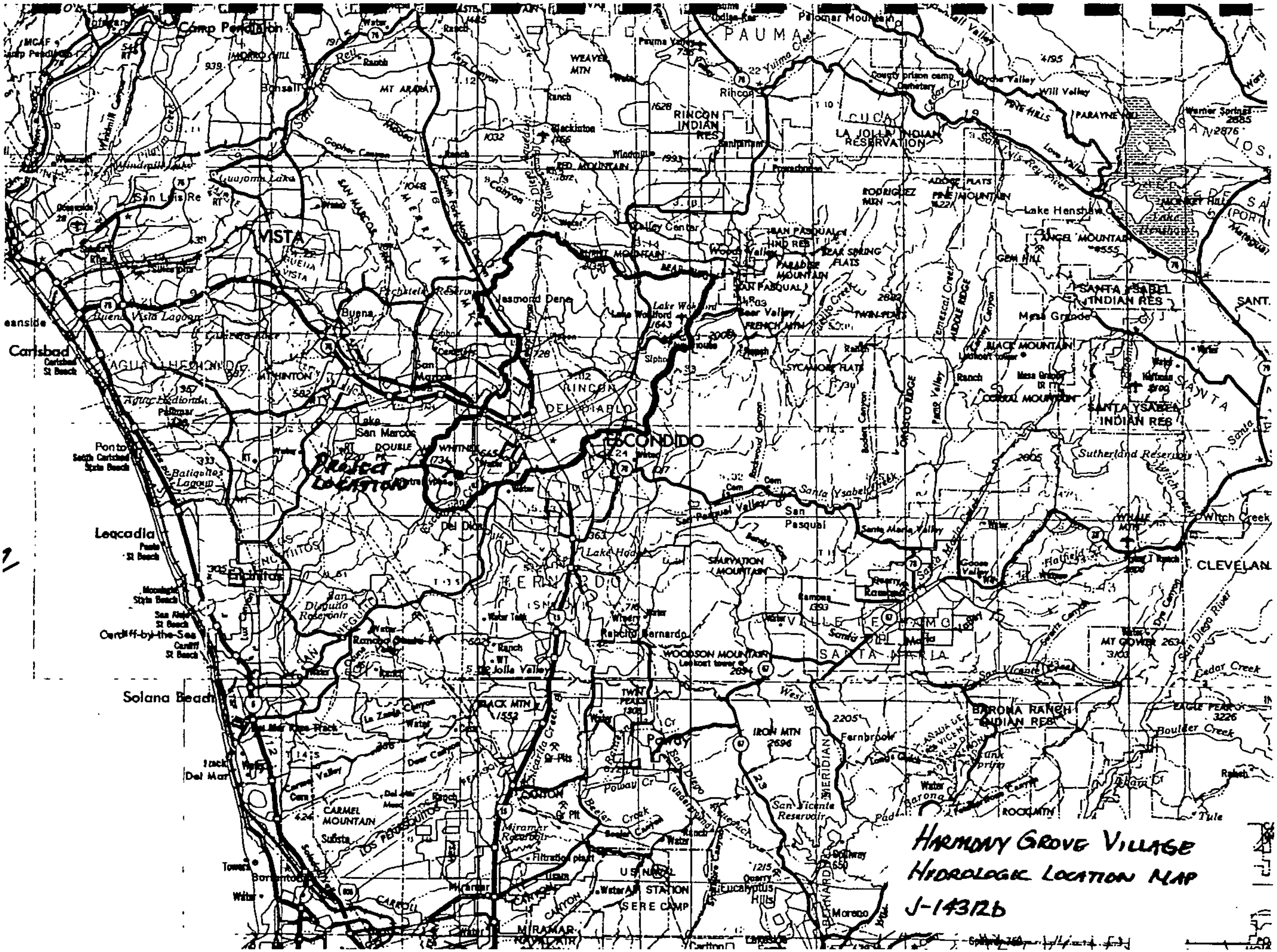

HARMONY GROVE VILLAGE
HYDROLOGIC LOCATION MAP
J-14312D
PROJECT LOCATION
Camp Pendleton
PAUMA
Palomar Mountain
Rincon
RINCON INDIAN RES
LA JOLLA INDIAN RESERVATION
VISTA
Carlsbad
Oceanside
Buena Vista Lagoon
San Marcos
Lake San Marcos
ESCONDIDO
Valley Center
Lake Wohlford
Lake Henshaw
SANTA YSABEL INDIAN RES
Mesa Grande
Sutherland Reservoir
San Pasqual
Santa Ysabel Creek
Lake Hodges
Leucadia
Encinitas
Cardiff-by-the-Sea
Solana Beach
Del Mar
Rancho Bernardo
Poway
Poway Cr
IRON MTN
BARONA RANCH INDIAN RES
San Vicente Reservoir
Miramar Reservoir
CARMEL MOUNTAIN
US NAVAL AIR STATION
MIRAMAR
Eucalyptus Hills
Fernbrook
CLEVELAND
San Diego River
Boulder Creek
Cedar Creek

# Table 2-2. BENEFICIAL USES OF INLAND SURFACE WATERS

| Inland Surface Waters [1,2] | Hydrologic Unit Basin Number | BENEFICIAL USE | | | | | | | | | | | | | | |
|---|---|---|---|---|---|---|---|---|---|---|---|---|---|---|---|---|
| | | MUN | AGR | IND | PROC | GWR | FRSH | POW | REC1 | REC2 | BIOL | WARM | COLD | WILD | RARE | SPWN |
| **Escondido Creek Watershed** | | | | | | | | | | | | | | | | |
| *San Elijo Lagoon* | 4.61 | See Coastal Waters- Table 2-3 | | | | | | | | | | | | | | |
| Escondido Creek | 4.63 | ● | ● | O | | | | ● | ● | ● | | ● | ● | ● | | |
| *Lake Wohlford* | 4.63 | See Reservoirs & Lakes- Table 2-4 | | | | | | | | | | | | | | |
| *Lake Dixon* | 4.62 | See Reservoirs & Lakes- Table 2-4 | | | | | | | | | | | | | | |
| Escondido Creek | 4.62 | ● | ● | O | | | | | ● | ● | | ● | ● | ● | | |
| Reidy Canyon | 4.62 | ● | ● | O | | | | | ● | ● | | ● | ● | ● | | |
| Escondido Creek | 4.61 | ● | ● | O | | | | | ● | ● | | ● | ● | ● | | |
| **San Dieguito River Watershed** | | | | | | | | | | | | | | | | |
| Santa Ysabel Creek | 5.54 | ● | ● | ● | ● | | | | ● | ● | | ● | ● | ● | | ● |
| Dan Price Creek | 5.54 | ● | ● | ● | ● | | | | ● | ● | | ● | ● | ● | | |
| Santa Ysabel Creek | 5.53 | ● | ● | ● | ● | | | | ● | ● | | ● | ● | ● | | |
| Witch Creek | 5.53 | ● | ● | ● | ● | | | | ● | ● | | ● | ● | ● | | ● |
| *Sutherland Lake* | 5.53 | See Reservoirs & Lakes- Table 2-4 | | | | | | | | | | | | | | |
| Bloomdale Creek | 5.53 | ● | ● | ● | ● | | | | ● | ● | | ● | ● | ● | | |
| Santa Ysabel Creek | 5.52 | ● | ● | ● | ● | | | | ● | ● | | ● | ● | ● | ● | |
| *Lake Poway* | 5.52 | See Reservoirs & Lakes- Table 2-4 | | | | | | | | | | | | | | |
| Black Canyon | 5.52 | ● | ● | ● | ● | | | | ● | ● | | ● | ● | ● | | ● |

● Existing Beneficial Use

O Potential Beneficial Use

[1] Waterbodies are listed multiple times if they cross hydrologic area or sub area boundaries.

[2] Beneficial use designations apply to all tributaries to the indicated waterbody, if not listed separately.

# Table 2-5. BENEFICIAL USES OF GROUND WATERS

| Ground Water | | | Hydrologic Unit Basin Number | BENEFICIAL USE | | | | | |
|---|---|---|---|---|---|---|---|---|---|
| | | | | MUN | AGR | IND | PROC | FRSH | GWR |
| **CARLSBAD HYDROLOGIC UNIT - Continued** | | | 4.00 | | | | | | |
| San Marcos | HA | | 4.50 | | | | | | |
| Batiquitos | HSA | 2,7 | 4.51 | ● | ● | ● | | | |
| Batiquitos | HSA | 8 | 4.51 | O | O | O | | | |
| Richland | HSA | 2,7 | 4.52 | ● | ● | ● | | | |
| Twin Oaks | HSA | 2,7 | 4.53 | ● | ● | ● | | | |
| Escondido | HA | | 4.60 | | | | | | |
| San Elijo | HSA | 2 | 4.61 | O | ● | ● | | | |
| Escondido | HSA | | 4.62 | ● | ● | ● | | | |
| Lake Wohlford | HSA | | 4.63 | ● | ● | ● | | | |

2 These beneficial uses do not apply westerly of the easterly boundary of the right-of-way of Interstate Highway 5 and this area is excepted from the sources of drinking water policy. The beneficial uses for the remainder of the hydrologic area are as shown.

7 These beneficial used do not apply to HSA 4.51 and HSA 4.52 between Highway 78 and El Camino Real and to all lands which drain to Moonlight Creek and to Encinitas Creek and this area is excepted from the sources of drinking water policy. The beneficial uses for the remainder of the subarea are as shown.

8 These beneficial use designations apply to the portion of HSA 4.51 bounded on the south by the north shore of Batiquitos Lagoon, on the west by the easterly boundary of the Interstate Highway 5 right-of-way, on the north by the subarea boundary and on the east by the easterly boundary of El Camino Real.

● Existing Beneficial Use

O Potential Beneficial Use

**SITE DESIGN**

To minimize stormwater impacts, site design measures must be addressed. The following checklist provides options for avoiding or reducing potential impacts during project planning. If YES is checked, it is assumed that the measure was used for this project. If NO is checked, please provide a brief explanation why the option was not selected in the text box below.

| | | OPTIONS | YES | NO | N/A |
|---|---|---|---|---|---|
| 1. | | Can the products be relocated or realigned to avoid/reduce impacts to receiving waters or to increase the preservation of critical (or problematic) areas such as floodplains, steep slopes, wetlands, and areas with erosive or unstable soil conditions? | X | | |
| 2. | | Can the project be designed to minimize impervious footprint? | X | | |
| 3. | | Conserve natural areas where feasible? | X | | |
| 4. | | Where landscape is proposed, can rooftops, impervious sidewalks, walkways, trails and patios be drained into adjacent landscaping? | | X | |
| 5. | | For roadway projects, can structures and bridges be designed or located to reduce work in live streams and minimize construction impacts? | X | | |
| 6. | | Can any of the following methods be utilized to minimize erosion from slopes: | X | | |
| | 6.a. | Disturbing existing slopes only when necessary? | X | | |
| | 6.b. | Minimize cut and fill areas to reduce slope lengths? | X | | |
| | 6.c. | Incorporating retaining walls to reduce steepness of slopes or to shorten slopes? | X | | |
| | 6.d. | Providing benches or terraces on high cut and fill slopes to reduce concentration of flows? | X | | |
| | 6.e. | Rounding and shaping slopes to reduce concentrated flow? | X | | |
| | 6.f. | Collecting concentrated flows in stabilized drains and channels? | X | | |

Please provide a brief explanation for each option that was checked N/A or NO in the following box.

Where feasible, rooftops, impervious sidewalks, walkways, trails and patios will be drained into adjacent landscaping. The project has been redesigned to provide a treatment train of water quality BMPs to the majority of the project. The majority of the project will have CDS units and water quality basins. The equestrian areas will have buffer strips and enhanced bio-filtration.

If the project includes work in channels, then complete the following checklist. Information shall be obtained from the project drainage report.

| No. | CRITERIA | YES | NO | N/A | COMMENTS |
|---|---|---|---|---|---|
| 1. | Will the project increase velocity or volume of downstream flow? | X | | | If YES go to 5. |
| 2. | Will the project discharge to unlined channels? | | | | If YES go to 5. |
| 3. | Will the project increase potential sediment load of downstream flow? | | | | If YES go to 5. |
| 4. | Will the project encroach, cross, realign, or cause other hydraulic changes to a stream that may affect upstream and/or downstream channel stability? | | | | If YES go to 7. |
| 5. | Review channel lining materials and design for stream bank erosion. | X | | | Continue to 6. |
| 6. | Consider channel erosion control measures within the project limits as well as downstream. Consider velocity. | X | | | Continue to 7. |
| 7. | Include, where appropriate, energy dissipation devices | X | | | Continue to 8. |

| | | | | | |
|---|---|---|---|---|---|
| | at culverts. | | | | |
| 8. | Ensure all transitions between culvert outlets/headwalls/wingwalls and channels are smooth to reduce turbulence and scour. | X | | | Continue to 9. |
| 9. | Include, if appropriate, detention facilities to reduce peak discharges. | X | | | |
| 10. | "Hardening" natural downstream areas to prevent erosion is not an acceptable technique for protecting channel slopes, unless predevelopment conditions are determined to be so erosive that hardening would be required even in the absence of the proposed development. | | | X | Continue to 11. |
| 11. | Provide other design principles that are comparable and equally effective. | | | X | Continue to 12. |
| 12. | End | | | | |

**SOURCE CONTROL**

Please complete the following checklist for Source Control BMPs. If the BMP is not applicable for this project, then check N/A only at the main category.

| | | BMP | YES | NO | N/A |
|---|---|---|---|---|---|
| 1. | | **Provide Storm Drain System Stenciling and Signage** | | | |
| | 1.a. | All storm drain inlets and catch basins within the project area shall have a stencil or tile placed with prohibitive language (such as: "NO DUMPING – DRAINS TO _____") and/or graphical icons to discourage dumping. | X | | |
| | 1.b. | Signs and prohibitive language and/or graphical icons, which prohibit illegal dumping, must be posted at public access points along channels and creeks within the project area. | X | | |
| 2. | | **Design Outdoors Material Storage Areas to Reduce Pollution Introduction** | | | |
| | 2.a. | This is a detached single-family residential project. Therefore, personal storage areas are exempt from this requirement | X | | |
| | 2.b. | Hazardous materials with the potential to contaminate urban runoff shall either be: (1) placed in an enclosure such as, but not limited to, a cabinet, shed, or similar structure that prevents contact with runoff or spillage to the storm water conveyance system; or (2) protected by secondary containment structures such as berms, dikes, or curbs. | X | | |
| | 2.c. | The storage area shall be paved and sufficiently impervious to contain leaks and spills. | X | | |
| | 2.d. | The storage area shall have a roof or awning to minimize direct precipitation within the secondary containment area. | X | | |
| 3. | | **Design Trash Storage Areas to Reduce Pollution Introduction** | | | |
| | 3.a. | Paved with an impervious surface, designed not to allow run-on from adjoining areas, screened or walled to prevent off-site transport of trash; or, | X | | |
| | 3.b. | Provide attached lids on all trash containers that exclude rain, or roof or awning to minimize direct precipitation. | X | | |
| 4. | | **Use Efficient Irrigation Systems & Landscape Design** | | | |
| | | The following methods to reduce excessive irrigation runoff shall be considered, and incorporated and implemented where determined applicable and feasible. | X | | |
| | 4.a. | Employing rain shutoff devices to prevent irrigation after precipitation | X | | |
| | 4.b. | Designing irrigation systems to each landscape area's specific water requirements. | X | | |
| | 4.c. | Using flow reducers or shutoff valves triggered by a pressure drop to control water loss in the event of broken sprinkler heads or lines. | X | | |

| | | BMP | YES | NO | N/A |
|---|---|---|---|---|---|
| | 4.d. | Employing other comparable, equally effective, methods to reduce irrigation water runoff. | X | | |
| 5. | **Private Roads** | | | | |
| | The design of private roadway drainage shall use at least one of the following. | | | | |
| | 5.a. | Rural swale system: street sheet flows to vetetated swale or gravel shoulder, curbs at street corners, culverts under driveways and street crossing. | | X | |
| | 5.b. | Urban curb/swale system: street slopes to curb, periodic swale inlets drain to vegatated swale/biofilter. | | X | |
| | 5.c. | Dual drainage system: First flush captured in street catch basins and discharged to adjacent vegetated swale or gravel shoulder, high flows connect directly to storm water conveyance system. | | X | |
| | 5.d. | Other methods that are comparable and equally effective within the project. | X | | |
| 6. | **Residential Driveways & Guest Parking** | | | | |
| | The design of driveways and private residential parking areas shall use at least one of the following features. | | | | |
| | 6.a. | Design driveways with shared access, flared (single lane at street) or wheelstrips (paving only under tires); or, drain into landscaping prior to discharging to the storm water conveyance system. | | X | |
| | 6.b. | Uncovered temporary or guest parking on private residential lots may be: paved with a permeable surface; or, designed to drain into landscaping prior to discharging to the storm water conveyance system. | | X | |
| | 6.c. | Other features which are comparable and equally effective. | X | | |
| 7. | **Dock Areas** | | | | X |
| | Loading/unloading dock areas shall include the following. | | | | |
| | 7.a. | Cover loading dock areas, or design drainage to preclude urban run-on and runoff. | | | |
| | 7.b. | Other features which are comparable and equally effective. | | | |
| | 7.c. | Other features which are comparable and equally effective. | | | |
| 8. | **Maintenance Bays** | | | | X |
| | Maintenance bays shall include the following. | | | | |
| | 8.a. | Repair/maintenance bays shall be indoors; or, desinged to preclude urban run-on and runoff. | | | |
| | 8.b. | Design a repair/maintenance bay drainage system to capture all wash water, leaks and spills. Connect drains to a sump for collection and disposal. Direct connection of the repair / maintenance bays to the storm drain system is prohibited. If required by local jurisdiction, often an Industrial Waste Discharge Permit. | | | |
| | 8.c. | Other features which are comparable and equally effective. | | | |
| 9. | **Vehicle Wash Areas** | | | | X |
| | Priority projects that include areas for washing/steam cleaning of vehicles shall use the following. | | | | |
| | 9.a. | Self-contained; or covered with a roof or overhang. | | | |
| | 9.b. | Equipped with a clarifier or other pretreatment facility. | | | |
| | 9.c. | Properly connected to a sanitary sewer. | | | |
| | 9.d. | Other features which are comparable and equally effective. | | | |
| 10. | **Outdoor Processing Areas** | | | | X |
| | Outdoor process equipment operations, such as rock grinding or crushing, painting or coating, grinding or sanding, degreasing or parts cleaning, waste piles, and wastewater and solid waste treatment and disposal, and other operationsdetermined to be a potential threat to water quality by the County shall adhere to the following requirements. | | | | |

| | | BMP | YES | NO | N/A |
|---|---|---|---|---|---|
| | 10.a. | Cover or enclose areas that would be the most significant source of pollutants; or, slope the area toward a dead-end sump; or, discharge to the sanitary sewer system following appropriate treatment in accordance with conditions established by the applicable sewer agency. | | | |
| | 10.b. | Grade or berm area to prevent run-on from surrounding areas. | | | |
| | 10.c. | Installation of storm drains in areas of equipment repair is prohibited. | | | |
| | 10.d. | Other features which are comparable or equally effective. | | | |
| 11. | **Equipment Wash Areas** | | | | X |
| | Outdoor equipment/accessory washing and steam cleaning activities shall be. | | | | |
| | 11.a. | Be self-contained; or covered with a roof or overhang. | | | |
| | 11.b. | Be equipped with a clarifier, grease trap or other pretreatment facility, as appropriate. | | | |
| | 11.c. | Be properly connected to a sanitary sewer. | | | |
| | 11.d. | Other features which are comparable or equally effective. | | | |
| 12. | **Parking Areas** | | | | |
| | The following design concepts shall be considered, and incorporated and implemented where determined applicable and feasible by the County. | | | | |
| | 12.a. | Where landscaping is proposed in parking areas, incorporate landscape areas into the drainage design. | X | | |
| | 12.b. | Overflow parking (parking stalls provided in excess of the county's minimum parking requirements) may be constructed with permeable paving. | | X | |
| | 12.c. | Other designer concepts that are comparable and equally effective. | X | | |
| 13. | **Fueling Area** | | | | X |
| | Non-retail fuel dispensing areas shall contain the following. | | | | |
| | 13.a. | Overhanging roof structure or canopy. The cover's minimum dimensions must be equal to or greater than the area within the grade break. The cove must not drain onto the fuel dispensing area and the downspouts must be routed to prevent drainage across the fueling area. The fueling area shall drain to the project's treatment control BMP(s) prior to discharging tot he storm water conveyance system. | | | |
| | 13.b. | Paved with Portland cement concrete (or equivalent smooth impervious surface). The use of asphalt concrete shall be prohibited. | | | |
| | 13.c. | Have an appropriate slope to prevent ponding, and must be separated from the rest of the site by a grade break that prevents run-on of urban runoff. | | | |
| | 13.d. | At a minimum, the concrete fuel dispensing area must extend 6.5 feet (2.0 meters) from the corner of each fuel dispenser, or the length at which the hose and nozzle assembly may be operated plus 1 foot (0.3 meter), whichever is less. | | | |

Please list other project specific Source Control BMPs in the following box. Write N/A if there are none and briefly explain.

A Pesticide and Fertilizer management plan and aggressive source control BMPs have been established for the equestrian facilities (Please refer to section 4.2.7).

# APPENDIX B

## Calculations for Water Quality Treatment Flow Requirements

# Water Quality Volume Calculations for Harmony Grove Village

| Drainage Basin | Hydrologic Land Use (per workmap) | Area (acres) | Cover Description, Percent Impervious (table 4-2) | Runoff Coefficient (table 3-1) | C value* | Calculated Treatment Volume (acre-ft) | Actual Volume (acre-ft) |
|---|---|---|---|---|---|---|---|
| 100 | Grove Compound | 20.1 | 64% | 0.70 | | | |
| | Hillside Farmhouse A | 6.73 | 45% | 0.60 | | | |
| | Open Space | 34.4 | 0% | 0.35 | | | |
| | sum | 61.2 | | | 0.75 | 2.9 | 4.6 |
| 500 | Hillside Farmhouse A | 1.8 | 45% | 0.60 | | | |
| | Hillside Compound | 5.4 | 73% | 0.75 | | | |
| | Open Space | 7.3 | 0% | 0.35 | | | |
| | sum | 14.5 | | | 0.75 | 0.7 | 0.9 |
| 1000A | **sum | 166.7 | | | 0.75 | 7.9 | 11.9 |
| 1000B | **sum | 97.6 | | | 0.75 | 4.6 | 9.6 |
| 1400 | Live/Work | 0.9 | 70% | 0.74 | | | |
| | Road | 3.6 | 95% | 0.87 | | | |
| | Open Space | 23.3 | 0% | 0.35 | | | |
| | | 27.9 | | | 0.75 | | |
| EQ1 | Impervious Area | 0.4 | 95% | 0.87 | | | |
| | Open Space | 3.1 | 0% | 0.35 | | | |
| | sum | 3.5 | | | 0.75 | | |

# Water Quality Volume Calculations for Harmony Grove Village

| Drainage Basin | Hydrologic Land Use (per workmap) | Area (acres) | Cover Description, Percent Impervious (table 4-2) | Runoff Coefficient (table 3-1) | C value* | Calculated Treatment Volume (acre-ft) | Actual Volume (acre-ft) |
|---|---|---|---|---|---|---|---|
| EQ2 | Impervious Area | 2.3 | 95% | 0.87 | | | |
| | Open Space | 1.7 | 0% | 0.35 | | | |
| | sum | 4 | | | 0.75 | | |
| 1100 | Impervious Area | 8.5 | 95% | 0.87 | | | |
| | Open Space | 13.7 | 0% | 0.35 | | | |
| | sum | 22.2 | | | 0.75 | | |
| 1200 | Impervious Area | 0.7 | 95% | 0.87 | | | |
| | Open Space | 9.1 | 0% | 0.35 | | | |
| | sum | 9.8 | | | 0.75 | 0.5 | 0.8 |

* A conservative standard runoff coefficient ("C" value) was used for the calculations of the treatment volume. For these tentative calculations, the "C" value was obtained from the June 2003 San Diego County Hydrology Manual, Table 3-1, and used as a conservative estimate of the overall "C " value. Once this project enters its final design phase, the volume calculations will all be recalculated to accurately reflect the exact parameters and requirements for which they are needed.

**= Excludes acreage associated with the channelized portion of Eden Valley Creek and tributaries.

Harmony Grove Village
J-14312
printed 3/27/2006
3/16/06

# Water Quality Treatment Flowrate for Harmony Grove Village

| Drainage Basin | Area (acres) | C Value | Treatment Flowrate (cfs) | CDS Unit (model #) | CDS Treatment Flow (cfs) | Total Cost ($) |
|---|---|---|---|---|---|---|
| 100 | 61.2 | 0.75 | 9.18 | PSW 50_50 | 11 | 52,945.00 |
| 500 | 14.5 | 0.75 | 2.18 | PSW 30-30 | 3 | 29,628.00 |
| 1400 | 27.9 | 0.75 | 4.19 | PSWC 40-30 | 4.5 | 38,554.00 |
| 1000-A | 46.6 | 0.75 | 6.99 | PSW 50_42 | 9 | 51,329.00 |
| 1000-B | 48.6 | 0.75 | 7.29 | PSW 50_42 | 9 | 51,329.00 |
| 1000-C | 11.1 | 0.75 | 1.67 | PMSU 30_20 | 2 | 25,550.00 |
| 1000-D | 25.9 | 0.75 | 3.89 | PSWC 40-30 | 4.5 | 38,554.00 |
| 1000-E | 11.6 | 0.75 | 1.74 | PMSU 30_20 | 2 | 25,550.00 |
| 1000-F | 31.8 | 0.75 | 4.77 | PSWC 40-40 | 6 | 42,864.00 |
| 1000-G | 18.1 | 0.75 | 2.72 | PSW 30-30 | 3 | 29,628.00 |
| 1000-H | 20.0 | 0.75 | 3.00 | PSWC 40-30 | 4.5 | 38,554.00 |
| 1000-I | 20.6 | 0.75 | 3.09 | PSWC 40-30 | 4.5 | 38,554.00 |
| 1000-J | 7.1 | 0.75 | 1.07 | PMSU 20-20 | 1.1 | 14,353.00 |
| 1000-K | 13.1 | 0.75 | 1.97 | PMSU 30-20 | 2 | 25,550.00 |
| 1000-L | 9.8 | 0.75 | 1.47 | PMSU 20_25 | 1.5 | 19,163.00 |

A conservative standard runoff coefficient ("C" value) was used for the calculations of the treatment flow rates for the CDS units associated with Drainage Basin 1000. For these tentative calculations, the "C" values were obtained from the June 2003 San Diego County Hydrology Manual, Table 3-1, and used as a conservative estimate of the overall "C" value. From all the proposed product land use (excluding roads), "Hillside Compound" (with a 73 percent impervious) produced the most conservative runoff coefficient value of 0.75. Therefore, this conservative "C" value was used for all the calculated treatment flow rates draining to each CDS unit. Once this project enters its final design phase, these treatment flows will all be recalculated to accurately reflect the exact parameters and requirements for which they are needed.

# CDS COSTS (NEW CONSTRUCTION)

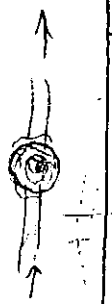

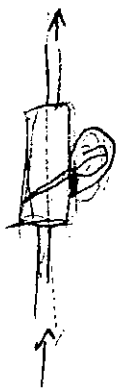

| | MODEL | TREATMENT FLOW (CFS) | DRAINAGE AREA* (ACRES) | EQUIPMENT COSTS | SALES TAX (7.75%) | INSTALLATION COSTS*** | TOTAL |
|---|---|---|---|---|---|---|---|
| IN-LINE CDS UNITS**** | PMSU 20_15_4 | 0.7 | 4 | $7,500 | $581 | $2,000 | $10,081 |
| | PMSU 20_15 | 0.7 | 4 | $9,000 | $698 | $2,500 | $12,198 |
| | PMSU 20_20 | 1.1 | 6 | $11,000 | $853 | $2,500 | $14,353 |
| | PMSU 20_25 | 1.5 | 8 | $15,000 | $1,163 | $3,000 | $19,163 |
| | PMSU30_20 | 2 | 11 | $20,000 | $1,550 | $4,000 | $25,550 |
| | PMSU 30_30 | 3 | 17 | $25,000 | $1,938 | $4,000 | $30,938 |
| | PMSU 40_30 | 4.5 | 25 | $29,000 | $2,248 | $5,500 | $36,748 |
| | PMSU 40_40 | 6 | 33 | $33,500 | $2,596 | $5,500 | $41,596 |
| OFF-LINE CDS UNITS***** | PSW 30_30 | 3 | 17 | $21,000 | $1,628 | $7,000 | $29,628 |
| | PSWC 40_30 | 4.5 | 25 | $26,500 | $2,054 | $10,000 | $38,554 |
| | PSWC 40_40 | 6 | 33 | $30,500 | $2,364 | $10,000 | $42,864 |
| | PSW 50_42 | 9 | 50 | $36,500 | $2,829 | $12,000 | $51,329 |
| | PSW 50_50 | 11 | 61 | $38,000 | $2,945 | $12,000 | $52,945 |
| | PSWC 56_53 | 14 | 78 | $44,000 | $3,410 | $15,000 | $62,410 |
| | PSWC 56_68 | 19 | 106 | $54,000 | $4,185 | $17,000 | $75,185 |
| | PSW 70_70 | 26 | 144 | $67,000 | $5,193 | $25,000 | $97,193 |
| | PSW 100_60 | 38 | 211 | $118,000 | $9,145 | $40,000 | $167,145 |
| | PSW 100_80 | 50 | 278 | $127,000 | $9,843 | $45,000 | $181,843 |
| | PSW 100_100 | 64 | 356 | $135,000 | $10,463 | $50,000 | $195,463 |

* Area = Q/CI (I = 0.20 in/hr**, C = 0.9)

** Based on Regional Water Quality Control Board SUSMP Requirements
(Intensity may vary depending on Tc in certain regions)

**** In-line CDS Units can be used for off-line configurations

***** Off-line CDS Units are designed to connect to a Cleanout or Box Culvert (vertical wall)

RICK™
ENGINEERING COMPANY
5620 Friars Road • San Diego, California 92110-2596 • (619) 291-3588 • www.rickengineering.com

Date 3/21/06
Job No. 14312B
Page

Harmony Grove Village Basin 100

Volume Based Calculation

$P_{85}$ = 0.76 inches

A = 61.2 Acres

C = 0.70 Note The C value is a conservative value used.

$$V_t = \overset{C}{(0.75)}\ \overset{A}{(61.2)}\ \overset{P}{(0.76\,in)}\left(\frac{1}{12}\right) = \boxed{2.91\ \text{Acre ft}}$$

Flow Rate Based Calculation

$Q_t = C I A$

$I = 0.2$ in/hour

$$(0.75)(0.2)(61.2) = \boxed{9.18\ \text{cfs}}$$

# Water Quality Basin

ÿÿÿFile.... .\sample\HARMONY.ppk
ÿÿÿTitle... Water QUALITY BASIN 100

| Elevation (ft) | Planimeter (sq.in) | Area (acres) | A1+A2+sqr(A1*A2) (acres) | Volume (ac-ft) | Volume Sum (ac-ft) |
|---|---|---|---|---|---|
| 759.80 | ----- | .0000 | .0000 | .000 | .000 |
| 760.00 | ----- | .3100 | .3100 | .021 | .021 |
| 762.00 | ----- | .3600 | 1.0041 | .669 | .690 |
| 764.00 | ----- | .4200 | 1.1688 | .779 | 1.469 |
| 766.00 | ----- | .4900 | 1.3637 | .909 | 2.378 |
| 768.00 | ----- | .5500 | 1.5591 | 1.039 | 3.418 |
| 770.00 | ----- | .6400 | 1.7833 | 1.189 | 4.607 |

Elevations With Areas Interpolated From
The Closest Two Planimeter Readings

| Elevation (ft) | Planimeter (sq.in) | Area (acres) | A1+A2+sqr(A1*A2) (acres) | Volume (ac-ft) | Volume Sum (ac-ft) |
|---|---|---|---|---|---|
| 761.00 | ----- | .3345 | .9666 | .322 | .343 |
| 763.00 | ----- | .3894 | 1.1238 | .375 | 1.065 |
| 765.00 | ----- | .4543 | 1.3112 | .437 | 1.906 |
| 767.00 | ----- | .5196 | 1.5141 | .505 | 2.883 |
| 769.00 | ----- | .5941 | 1.7158 | .572 | 3.990 |

POND VOLUME EQUATIONS

* Incremental volume computed by the Conic Method for Reservoir Volumes.

Volume = (1/3) * (EL2-EL1) * (Area1 + Area2 + sq.rt.(Area1*Area2))

where: EL1, EL2 = Lower and upper elevations of the increment
Area1,Area2 = Areas computed for EL1, EL2, respectively
Volume = Incremental volume between EL1 and EL2

Interpolated area from closest two given contour areas
is computed using the relationship:

IA = (sq.rt(Area1) + ((Ei-E1)/(E2-E1))*(sq.rt(Area2)-sq.rt(Area1)))**2

where: E1, E2 = Closest two elevations with planimeter data
Ei = Elevation at which to interpolate area
Area1,Area2 = Areas computed for E1, E2, respectively
IA = Interpolated area for Ei

ÿÿÿFile.... .\sample\HARMONY.PPK
ÿÿÿTitle... Water QUALITY BASIN 500

| Elevation (ft) | Planimeter (sq.in) | Area (acres) | A1+A2+sqr(A1*A2) (acres) | Volume (ac-ft) | Volume Sum (ac-ft) |
|---|---|---|---|---|---|
| 677.80 | ----- | .0000 | .0000 | .000 | .000 |
| 678.00 | ----- | .1000 | .1000 | .007 | .007 |
| 680.00 | ----- | .1300 | .3440 | .229 | .236 |
| 682.00 | ----- | .1700 | .4487 | .299 | .535 |
| 684.00 | ----- | .2400 | .6120 | .408 | .943 |

Elevations With Areas Interpolated From
The Closest Two Planimeter Readings

| Elevation (ft) | Planimeter (sq.in) | Area (acres) | A1+A2+sqr(A1*A2) (acres) | Volume (ac-ft) | Volume Sum (ac-ft) |
|---|---|---|---|---|---|
| 679.00 | ----- | .1145 | .3215 | .107 | .114 |
| 681.00 | ----- | .1493 | .4187 | .140 | .376 |
| 683.00 | ----- | .2035 | .5595 | .186 | .722 |

POND VOLUME EQUATIONS

* Incremental volume computed by the Conic Method for Reservoir Volumes.

Volume = (1/3) * (EL2-EL1) * (Area1 + Area2 + sq.rt.(Area1*Area2))

where: EL1, EL2 = Lower and upper elevations of the increment
Area1,Area2 = Areas computed for EL1, EL2, respectively
Volume = Incremental volume between EL1 and EL2

Interpolated area from closest two given contour areas
is computed using the relationship:

IA = (sq.rt(Area1) + ((Ei-E1)/(E2-E1))*(sq.rt(Area2)-sq.rt(Area1)))**2

where: E1, E2 = Closest two elevations with planimeter data
Ei = Elevation at which to interpolate area
Area1,Area2 = Areas computed for E1, E2, respectively
IA = Interpolated area for Ei

ÿÿÿFile.... .\sample\HARMONY.PPK
ÿÿÿTitle... Water QUALITY BASIN 1000A

| Elevation (ft) | Planimeter (sq.in) | Area (acres) | A1+A2+sqr(A1*A2) (acres) | Volume (ac-ft) | Volume Sum (ac-ft) |
|---|---|---|---|---|---|
| 559.80 | ----- | .0000 | .0000 | .000 | .000 |
| 560.00 | ----- | .1600 | .1600 | .011 | .011 |
| 562.00 | ----- | .6100 | 1.0824 | .722 | .732 |
| 564.00 | ----- | 1.0000 | 2.3910 | 1.594 | 2.326 |
| 566.00 | ----- | 1.1000 | 3.1488 | 2.099 | 4.425 |
| 568.00 | ----- | 1.2000 | 3.4489 | 2.299 | 6.725 |
| 570.00 | ----- | 1.3000 | 3.7490 | 2.499 | 9.224 |
| 572.00 | ----- | 1.4000 | 4.0491 | 2.699 | 11.923 |

Elevations With Areas Interpolated From
The Closest Two Planimeter Readings

| Elevation (ft) | Planimeter (sq.in) | Area (acres) | A1+A2+sqr(A1*A2) (acres) | Volume (ac-ft) | Volume Sum (ac-ft) |
|---|---|---|---|---|---|
| 561.00 | ----- | .3487 | .7449 | .248 | .259 |
| 563.00 | ----- | .7930 | 2.0985 | .700 | 1.432 |
| 565.00 | ----- | 1.0494 | 3.0738 | 1.025 | 3.351 |
| 567.00 | ----- | 1.1495 | 3.3739 | 1.125 | 5.550 |
| 569.00 | ----- | 1.2495 | 3.6740 | 1.225 | 7.949 |
| 571.00 | ----- | 1.3495 | 3.9741 | 1.325 | 10.549 |

POND VOLUME EQUATIONS

* Incremental volume computed by the Conic Method for Reservoir Volumes.

Volume = (1/3) * (EL2-EL1) * (Area1 + Area2 + sq.rt.(Area1*Area2))

where: EL1, EL2 = Lower and upper elevations of the increment
Area1,Area2 = Areas computed for EL1, EL2, respectively
Volume = Incremental volume between EL1 and EL2

Interpolated area from closest two given contour areas
is computed using the relationship:

IA = (sq.rt(Area1) + ((Ei-E1)/(E2-E1))*(sq.rt(Area2)-sq.rt(Area1)))**2

where: E1, E2 = Closest two elevations with planimeter data
Ei = Elevation at which to interpolate area
Area1,Area2 = Areas computed for E1, E2, respectively
IA = Interpolated area for Ei

ÿÿÿFile.... .\sample\HARMONY.PPK
ÿÿÿTitle... WATER QUALITY BASIN 1000B

| Elevation (ft) | Planimeter (sq.in) | Area (acres) | A1+A2+sqr(A1*A2) (acres) | Volume (ac-ft) | Volume Sum (ac-ft) |
|---|---|---|---|---|---|
| 559.80 | ----- | .0000 | .0000 | .000 | .000 |
| 560.00 | ----- | .1500 | .1500 | .010 | .010 |
| 562.00 | ----- | .4600 | .8727 | .582 | .592 |
| 564.00 | ----- | .7700 | 1.8251 | 1.217 | 1.809 |
| 566.00 | ----- | .8700 | 2.4585 | 1.639 | 3.448 |
| 568.00 | ----- | .9700 | 2.7586 | 1.839 | 5.287 |
| 570.00 | ----- | 1.0700 | 3.0588 | 2.039 | 7.326 |
| 572.00 | ----- | 1.1900 | 3.3884 | 2.259 | 9.585 |

Elevations With Areas Interpolated From
The Closest Two Planimeter Readings

| Elevation (ft) | Planimeter (sq.in) | Area (acres) | A1+A2+sqr(A1*A2) (acres) | Volume (ac-ft) | Volume Sum (ac-ft) |
|---|---|---|---|---|---|
| 561.00 | ----- | .2838 | .6402 | .213 | .223 |
| 563.00 | ----- | .6051 | 1.5926 | .531 | 1.123 |
| 565.00 | ----- | .8192 | 2.3835 | .794 | 2.603 |
| 567.00 | ----- | .9193 | 2.6836 | .895 | 4.342 |
| 569.00 | ----- | 1.0194 | 2.9838 | .995 | 6.281 |
| 571.00 | ----- | 1.1292 | 3.2984 | 1.099 | 8.425 |

POND VOLUME EQUATIONS

* Incremental volume computed by the Conic Method for Reservoir Volumes.

Volume = (1/3) * (EL2-EL1) * (Area1 + Area2 + sq.rt.(Area1*Area2))

where: EL1, EL2 = Lower and upper elevations of the increment
Area1,Area2 = Areas computed for EL1, EL2, respectively
Volume = Incremental volume between EL1 and EL2

Interpolated area from closest two given contour areas
is computed using the relationship:

IA = (sq.rt(Area1) + ((Ei-E1)/(E2-E1))*(sq.rt(Area2)-sq.rt(Area1)))**2

where: E1, E2 = Closest two elevations with planimeter data
Ei = Elevation at which to interpolate area
Area1,Area2 = Areas computed for E1, E2, respectively
IA = Interpolated area for Ei

ÿÿÿFile.... .\sample\HARMONY.PPK
ÿÿÿTitle... WATER QUALITY BASIN 1200

| Elevation (ft) | Planimeter (sq.in) | Area (acres) | A1+A2+sqr(A1*A2) (acres) | Volume (ac-ft) | Volume Sum (ac-ft) |
|---|---|---|---|---|---|
| 550.90 | ----- | .0000 | .0000 | .000 | .000 |
| 551.00 | ----- | .1200 | .1200 | .004 | .004 |
| 552.00 | ----- | .1400 | .3896 | .130 | .134 |
| 554.00 | ----- | .1700 | .4643 | .310 | .443 |
| 556.00 | ----- | .2000 | .5544 | .370 | .813 |

Elevations With Areas Interpolated From
The Closest Two Planimeter Readings

| Elevation (ft) | Planimeter (sq.in) | Area (acres) | A1+A2+sqr(A1*A2) (acres) | Volume (ac-ft) | Volume Sum (ac-ft) |
|---|---|---|---|---|---|
| 553.00 | ----- | .1546 | .4418 | .147 | .281 |
| 555.00 | ----- | .1847 | .5319 | .177 | .621 |

POND VOLUME EQUATIONS

* Incremental volume computed by the Conic Method for Reservoir Volumes.

Volume = (1/3) * (EL2-EL1) * (Area1 + Area2 + sq.rt.(Area1*Area2))

where: EL1, EL2 = Lower and upper elevations of the increment
Area1,Area2 = Areas computed for EL1, EL2, respectively
Volume = Incremental volume between EL1 and EL2

Interpolated area from closest two given contour areas
is computed using the relationship:

IA = (sq.rt(Area1) + ((Ei-E1)/(E2-E1))*(sq.rt(Area2)-sq.rt(Area1)))**2

where: E1, E2 = Closest two elevations with planimeter data
Ei = Elevation at which to interpolate area
Area1,Area2 = Areas computed for E1, E2, respectively
IA = Interpolated area for Ei

# APPENDIX C

## Water Quality Treatment Capacities, Details, and Costs

# CDS Unit

# CDS COSTS (NEW CONSTRUCTION)

| | MODEL | TREATMENT FLOW (CFS) | DRAINAGE AREA* (ACRES) | EQUIPMENT COSTS | SALES TAX (7.75%) | INSTALLATION COSTS*** | TOTAL |
|---|---|---|---|---|---|---|---|
| IN-LINE CDS UNITS**** | PMSU 20_15_4 | 0.7 | 4 | $7,500 | $581 | $2,000 | $10,081 |
| | PMSU 20_15 | 0.7 | 4 | $9,000 | $698 | $2,500 | $12,198 |
| | PMSU 20_20 | 1.1 | 6 | $11,000 | $853 | $2,500 | $14,353 |
| | PMSU 20_25 | 1.5 | 8 | $15,000 | $1,163 | $3,000 | $19,163 |
| | PMSU30_20 | 2 | 11 | $20,000 | $1,550 | $4,000 | $25,550 |
| | PMSU 30_30 | 3 | 17 | $25,000 | $1,938 | $4,000 | $30,938 |
| | PMSU 40_30 | 4.5 | 25 | $29,000 | $2,248 | $5,500 | $36,748 |
| | PMSU 40_40 | 6 | 33 | $33,500 | $2,596 | $5,500 | $41,596 |
| OFF-LINE CDS UNITS***** | PSW 30_30 | 3 | 17 | $21,000 | $1,628 | $7,000 | $29,628 |
| | PSWC 40_30 | 4.5 | 25 | $26,500 | $2,054 | $10,000 | $38,554 |
| | PSWC 40_40 | 6 | 33 | $30,500 | $2,364 | $10,000 | $42,864 |
| | PSW 50_42 | 9 | 50 | $36,500 | $2,829 | $12,000 | $51,329 |
| | PSW 50_50 | 11 | 61 | $38,000 | $2,945 | $12,000 | $52,945 |
| | PSWC 56_53 | 14 | 78 | $44,000 | $3,410 | $15,000 | $62,410 |
| | PSWC 56_68 | 19 | 106 | $54,000 | $4,185 | $17,000 | $75,185 |
| | PSW 70_70 | 26 | 144 | $67,000 | $5,193 | $25,000 | $97,193 |
| | PSW 100_60 | 38 | 211 | $118,000 | $9,145 | $40,000 | $167,145 |
| | PSW 100_80 | 50 | 278 | $127,000 | $9,843 | $45,000 | $181,843 |
| | PSW 100_100 | 64 | 356 | $135,000 | $10,463 | $50,000 | $195,463 |

* Area = Q/CI (I = 0.20 in/hr**, C = 0.9)

** Based on Regional Water Quality Control Board SUSMP Requirements (Intensity may vary depending on Tc in certain regions)

**** In-line CDS Units can be used for off-line configurations

***** Off-line CDS Units are designed to connect to a Cleanout or Box Culvert (vertical wall)

# PLAN VIEW

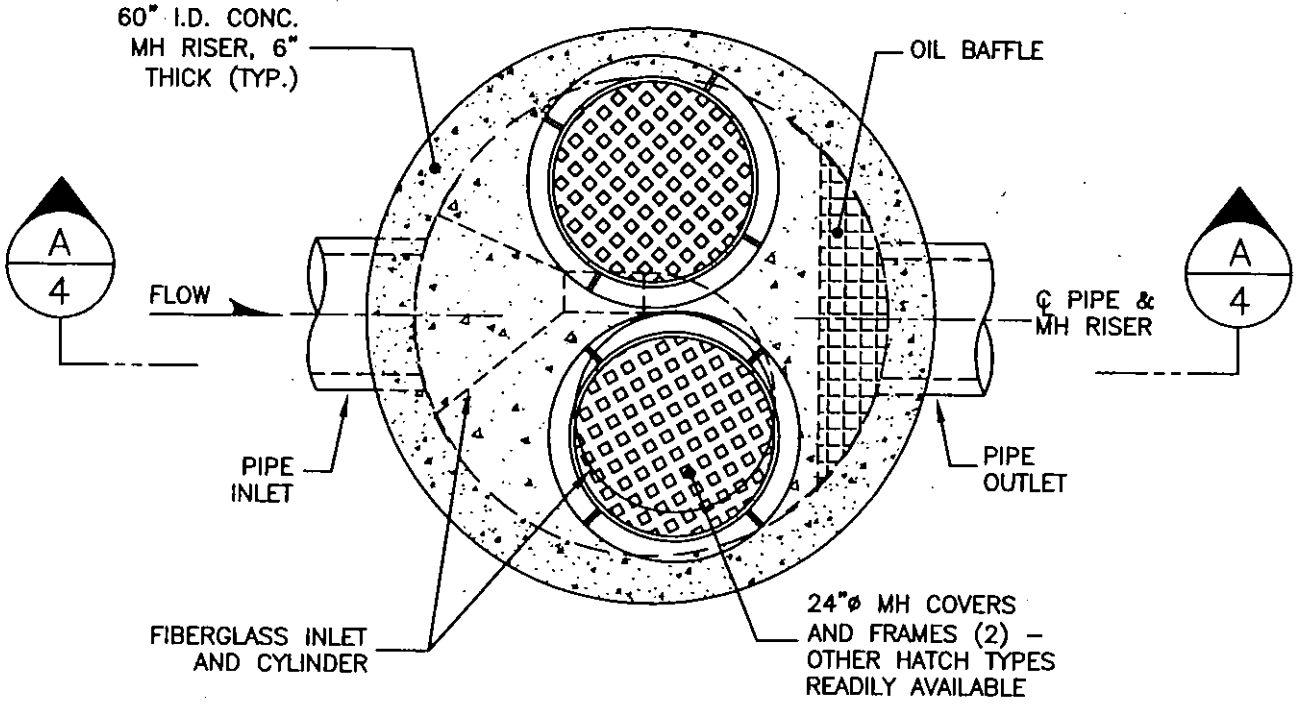


NOTE:
THE INTERNAL COMPONENTS ARE SHOWN IN THE RIGHT–HAND CONFIGURATION (CLOCKWISE FLOW)–THESE COMPONENTS MAY BE FURNISHED IN THE MIRROR IMAGE TO THAT SHOWN (LEFT–HAND CONFIGURATION, CCW FLOW)

## CDS MODEL PMSU20_20, 1.1 CFS CAPACITY STORM WATER TREATMENT UNIT

| | | | |
|---|---|---|---|
| CDS TECHNOLOGIES™ | PROJECT NAME<br>CITY, STATE | JOB# | SCALE 1"=2' |
| | | DATE: 12/30/02 | SHEET 2 |
| | | DRAWN: W. LORSCHEIDER | |
| | | APPROV. | |

# SECTION B–B

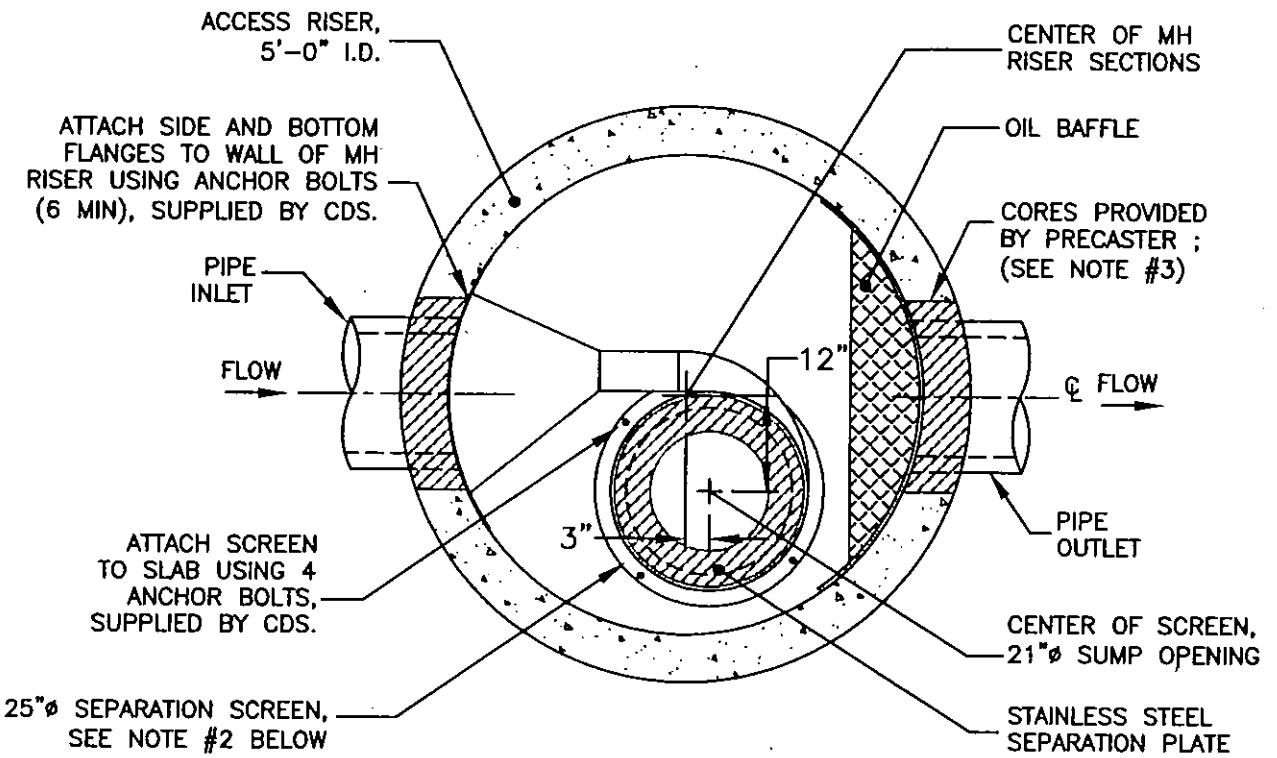


NOTES:

1. THE INTERNAL COMPONENTS ARE SHOWN IN THE RIGHT–HAND CONFIGURATION–THESE COMPONENTS MAY BE FURNISHED IN THE MIRROR IMAGE TO THAT SHOWN (LEFT–HAND CONFIGURATION).
2. FOR PROPER INSTALLATION, GREEN FLANGE ON SCREEN FACES UP FOR RIGHT–HAND INSTALLATIONS, RED FLANGE FACES UP FOR LEFT–HAND ORIENTED UNITS.
3. OVERSIZED CORES ARE PROVIDED TO ACCOUNT FOR DIFFERENT PIPEWALL THICKNESSES–ENSURE SUFFICIENT EXCAVATION DEPTH TO ATTAIN (EXTERNAL) SUMP INVERT ELEVATION (SEE SHEET 3).

## CDS MODEL PMSU20_20, 1.1 CFS CAPACITY STORM WATER TREATMENT UNIT

| | | | |
|---|---|---|---|
| CDS TECHNOLOGIES™ | PROJECT NAME<br>CITY, STATE | JOB# | SCALE 1"=2' |
| | | DATE: 12/30/02 | SHEET |
| | | DRAWN: W. LORSCHEIDER | 3 |
| | | APPROV. | |

# SECTION A–A
## ELEVATION VIEW

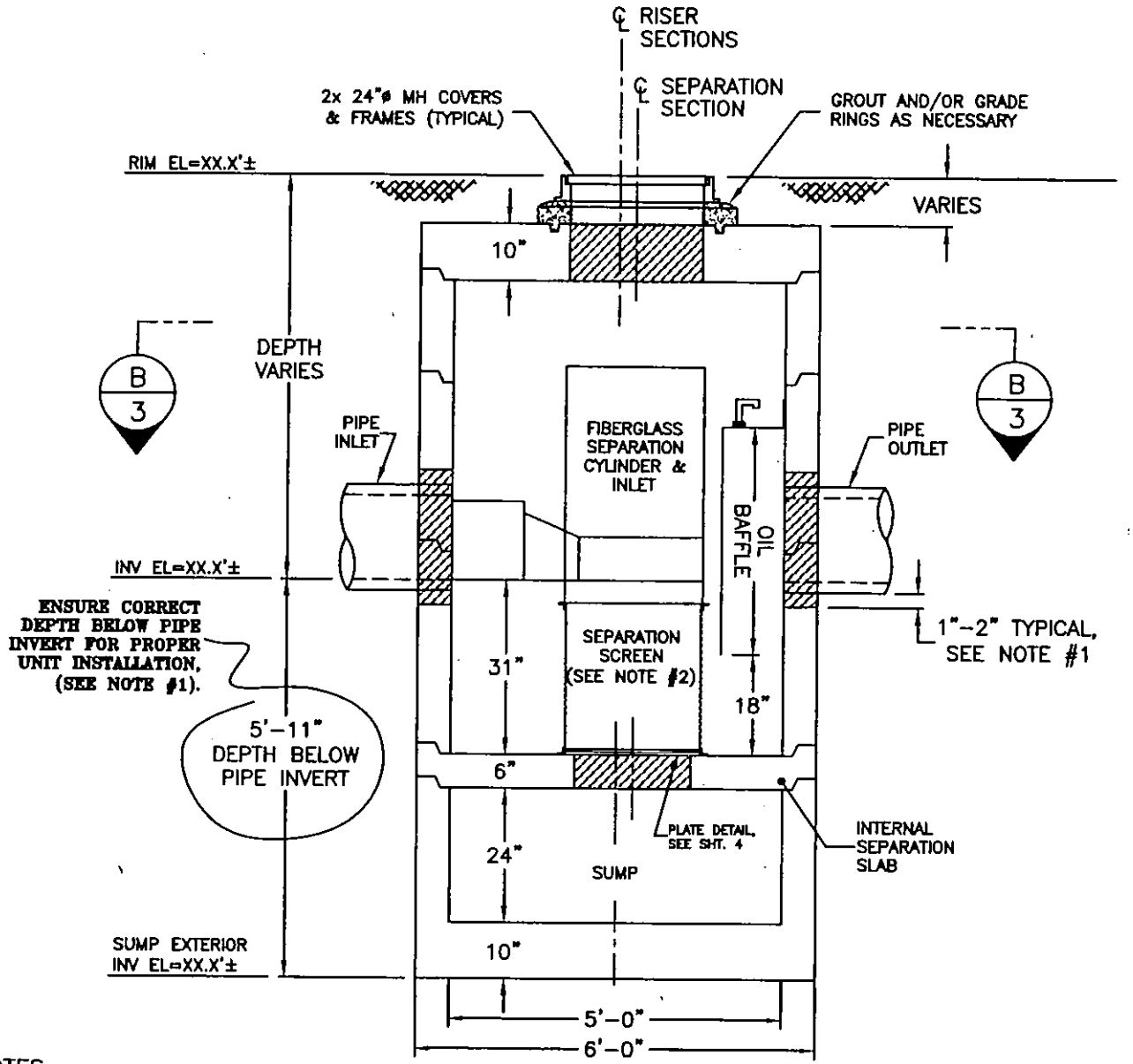


NOTES:

1. OVERSIZED CORES ARE PROVIDED TO ACCOUNT FOR DIFFERENT PIPEWALL THICKNESSES–ENSURE SUFFICIENT EXCAVATION DEPTH TO ATTAIN INDICATED (EXTERNAL) SUMP INVERT ELEVATION.
2. FOR PROPER INSTALLATION, GREEN FLANGE ON SCREEN FACES UP AND FASTENS TO FIBERGLASS CYLINDER FLANGE; RED FLANGE FASTENS TO SEPARATION SLAB WITH PROVIDED ANCHOR BOLTS.

# CDS MODEL PMSU20_20, 1.1 CFS CAPACITY STORM WATER TREATMENT UNIT

| | | | |
|---|---|---|---|
| CDS TECHNOLOGIES™ | PROJECT NAME<br>CITY, STATE | JOB# | SCALE 1:30 |
| | | DATE: 12/30/02 | SHEET |
| | | DRAWN: W. LORSCHEIDER | 4 |
| | | APPROV. | |

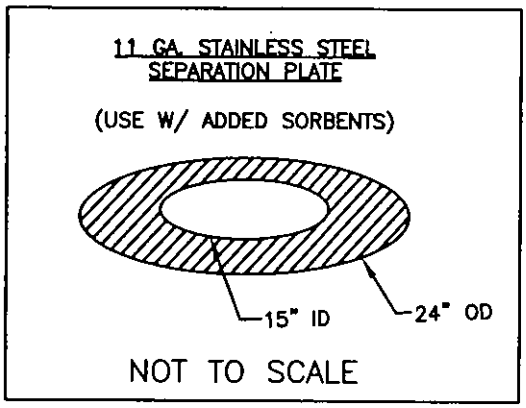


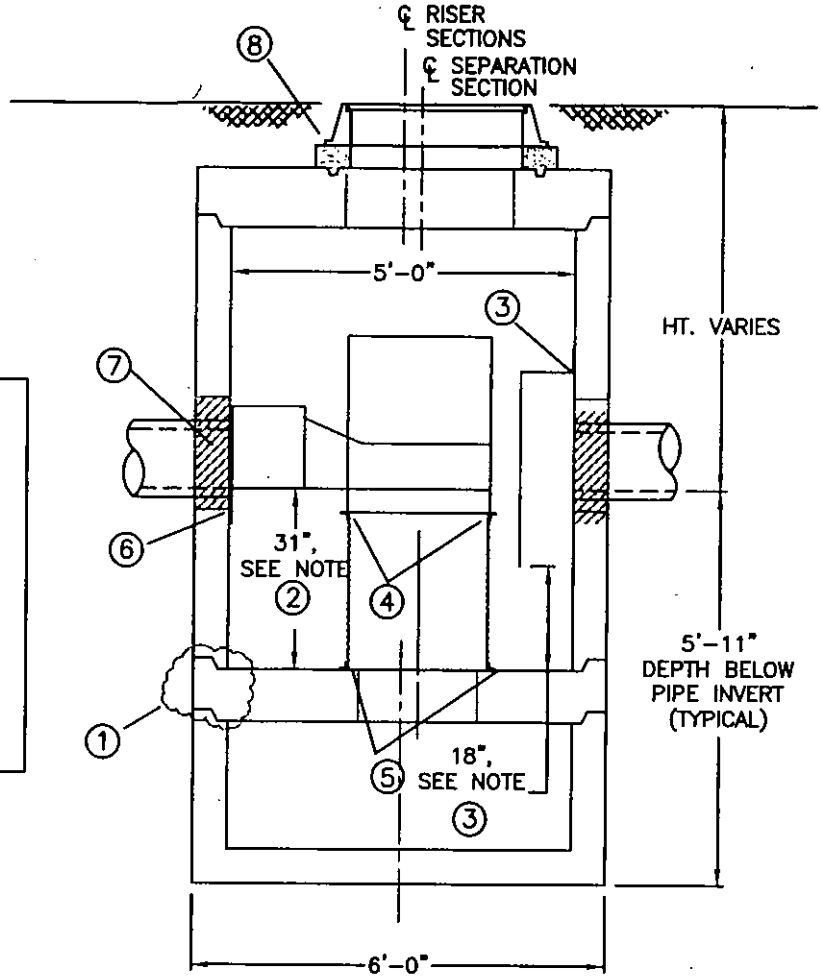


## CONSTRUCTION NOTES:

1. APPLY BUTYL MASTIC AND/OR GROUT TO SEAL JOINTS OF MANHOLE STRUCTURE. APPLY LOAD TO MASTIC SEAL IN JOINTS OF MH SECTIONS TO COMPRESS SEALANT IF NECESSARY. UNIT MUST BE WATER TIGHT, HOLDING WATER UP TO FLOWLINE INVERT (MINIMUM).
2. IF SEPARATION SLAB IS NON-INTEGRAL TO THE SEPARATION SECTION OF THE UNIT, SET AND VERIFY TOP ELEVATION BEFORE PLACING MORE PRECAST COMPONENTS OR BACKFILLING. ENSURE 31" FROM TOP OF SEPARATION SLAB TO PIPE INVERT.
3. SET BOTTOM OF OIL BAFFLE 18" ABOVE SEPARATION SLAB FLOOR; DRILL AND INSERT A MINIMUM OF TEN (10) ⅜" x 3 ¾" SS EXPANSION BOLTS @ 12" O.C. EQUALLY SPACED TO SECURE FIBERGLASS OIL BAFFLE FLANGE TO RISER WALL-(HARDWARE SUPPLIED BY CDS TECHNOLOGIES).
4. FASTEN FIBERGLASS CYLINDER/INLET TO SCREEN ASSEMBLY USING FOUR (4) SETS OF ½" x 1 ½" SS HEX HEAD BOLTS W/ NUTS AND WASHERS-(HARDWARE SUPPLIED BY CDS TECHNOLOGIES). IN THE LEFT-HANDED CONFIGURATION THE "RED" COLORED FLANGE ON THE SCREEN CYLINDER SHALL FACE UP. IN THE RIGHT-HANDED CONFIGURATION, THE "GREEN" COLORED FLANGE SHALL FACE UP.
5. CENTER SCREEN ASSEMBLY OVER SUMP OPENING AND POSITION FIBERGLASS INLET AGAINST RISER WALL; DRILL AND INSERT A MINIMUM OF SIX (6) ⅜" x 3 ¾" SS EXPANSION BOLTS EQUALLY SPACED TO SECURE FIBERGLASS INLET FLANGE TO RISER WALL-(HARDWARE SUPPLIED BY CDS TECHNOLOGIES).
6. VERIFY THAT SCREEN ASSEMBLY IS CENTERED OVER SUMP ACCESS HOLE AND ADJUST IF NECESSARY; FASTEN SCREEN TO SEPARATION SLAB USING FOUR (4) ⅜" x 3 ¾" SS EXPANSION BOLTS-(HARDWARE SUPPLIED BY CDS TECHNOLOGIES).
7. GROUT PIPE CONNECTIONS TO SEAL JOINT.
8. GRADE RINGS AND/OR GROUT TO MATCH FINISHED GRADE AS NEEDED.

| | | | |
|---|---|---|---|
| CDS™ TECHNOLOGIES | PMSU20_20 CONSTRUCTION NOTES | JOB# | SCALE N.T.S. |
| | | DATE: 7/6/00 | SHEET 5 |
| | | DRAWN: JSF | |
| | | APPROV. | |

# PLAN VIEW

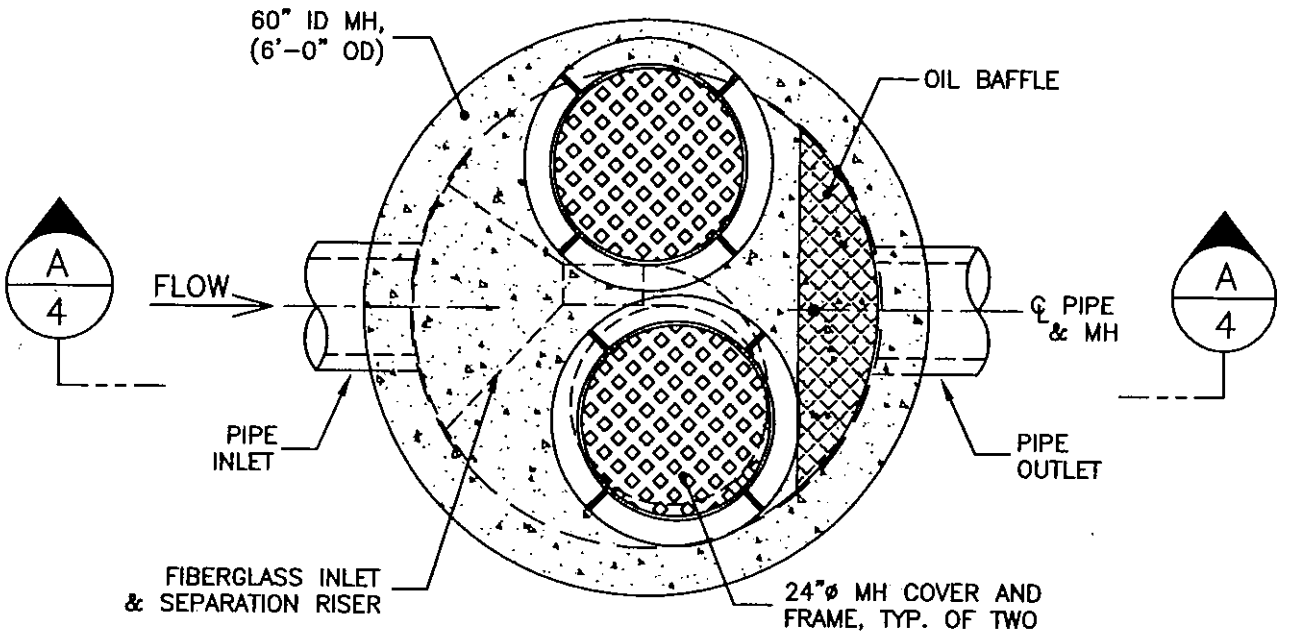


NOTE:
THE INTERNAL COMPONENTS ARE SHOWN IN THE RIGHT-HAND CONFIGURATION-THESE COMPONENTS MAY BE FURNISHED IN THE MIRROR IMAGE TO THAT SHOWN (LEFT-HAND CONFIGURATION).

## CDS MODEL PMSU20_25
### 1.6 CFS TREATMENT CAPACITY
### STM. WATER TREATMENT UNIT

| | | | |
|---|---|---|---|
| CDS TECHNOLOGIES™ | PROJECT NAME<br>CITY, STATE | JOB# | SCALE 1"=2' |
| | | DATE: 12/30/02 | SHEET |
| | | DRAWN: W. LORSCHEIDER | 2 |
| | | APPROV. | |

# SECTION B-B

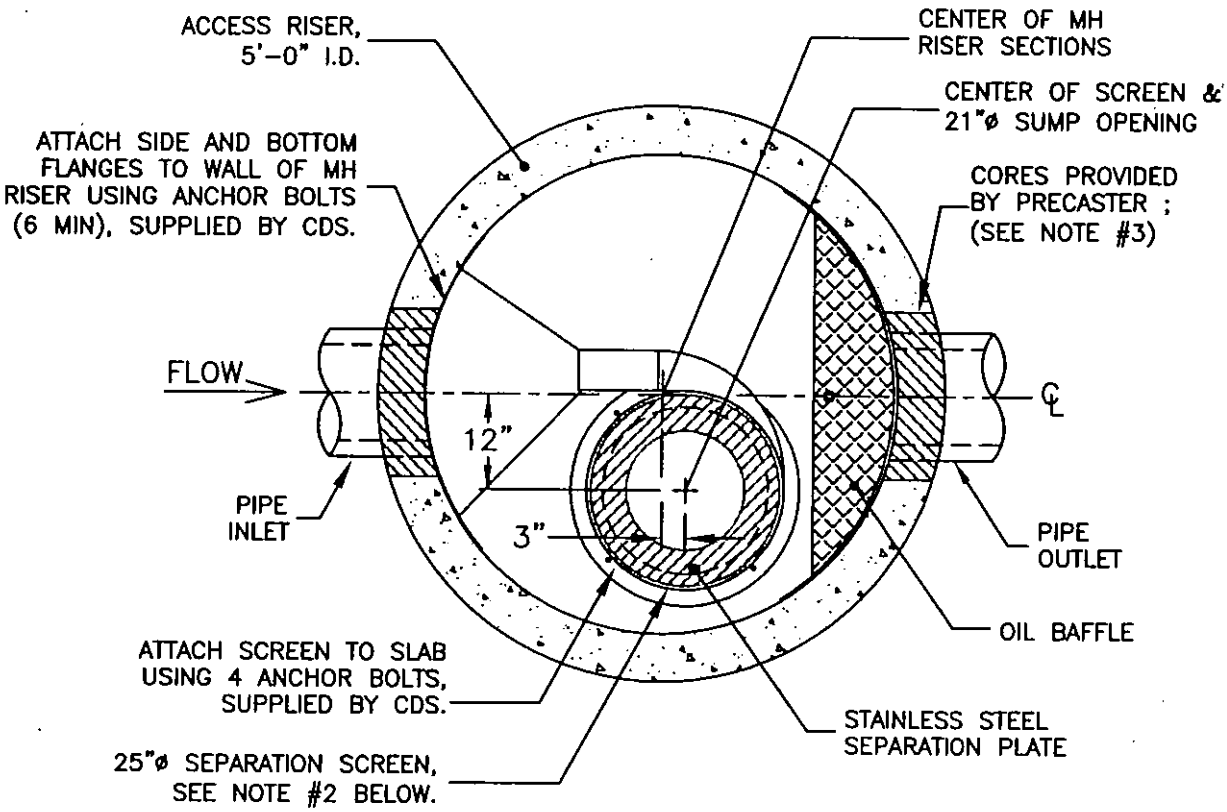


NOTES:

1. THE INTERNAL COMPONENTS ARE SHOWN IN THE RIGHT-HAND CONFIGURATION.
2. FOR PROPER INSTALLATION, GREEN FLANGE ON SCREEN FACES UP; RED FLANGE FACES DOWN AND FASTENS TO SEPARATION SLAB.
3. OVERSIZED CORES ARE PROVIDED TO ACCOUNT FOR DIFFERENT PIPEWALL THICKNESSES-ENSURE SUFFICIENT EXCAVATION DEPTH TO ATTAIN (EXTERNAL) SUMP INVERT ELEVATION (SEE SHEET 3).

## CDS MODEL PMSU20_25
### 1.6 CFS TREATMENT CAPACITY
### STM. WATER TREATMENT UNIT

| | | | |
|---|---|---|---|
| CDS TECHNOLOGIES™ | PROJECT NAME<br>CITY, STATE | JOB# | SCALE 1"=2' |
| | | DATE: 12/30/02 | SHEET |
| | | DRAWN: W. LORSCHEIDER | 3 |
| | | APPROV. | |

# SECTION A–A
## ELEVATION VIEW

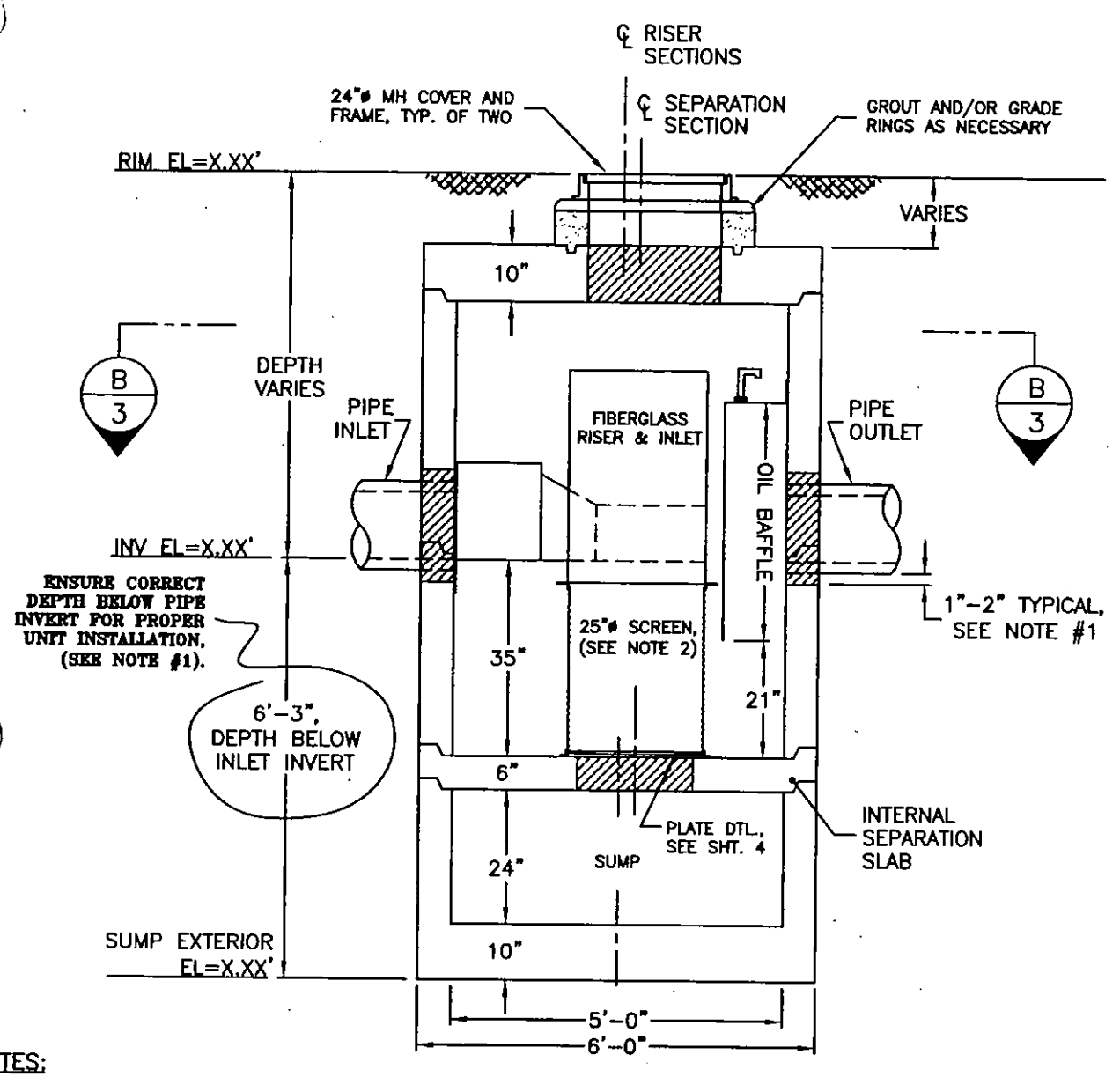


NOTES:

1. OVERSIZED CORES ARE PROVIDED TO ACCOUNT FOR DIFFERENT PIPEWALL THICKNESSES–ENSURE SUFFICIENT EXCAVATION DEPTH TO ATTAIN INDICATED (EXTERNAL) SUMP INVERT ELEVATION.
2. FOR PROPER INSTALLATION, GREEN FLANGE ON SCREEN FACES UP AND FASTENS TO FIBERGLASS CYLINDER FLANGE; RED FLANGE FASTENS TO SEPARATION SLAB WITH PROVIDED ANCHOR BOLTS.

## CDS MODEL PMSU20_25
### 1.6 CFS TREATMENT CAPACITY
### STM. WATER TREATMENT UNIT

| | | | |
|---|---|---|---|
| CDS TECHNOLOGIES™ | PROJECT NAME<br>CITY, STATE | JOB# | SCALE 1:30 |
| | | DATE: 12/30/02 | SHEET |
| | | DRAWN: W. LORSCHEIDER | 4 |
| | | APPROV. | |

# PLAN VIEW

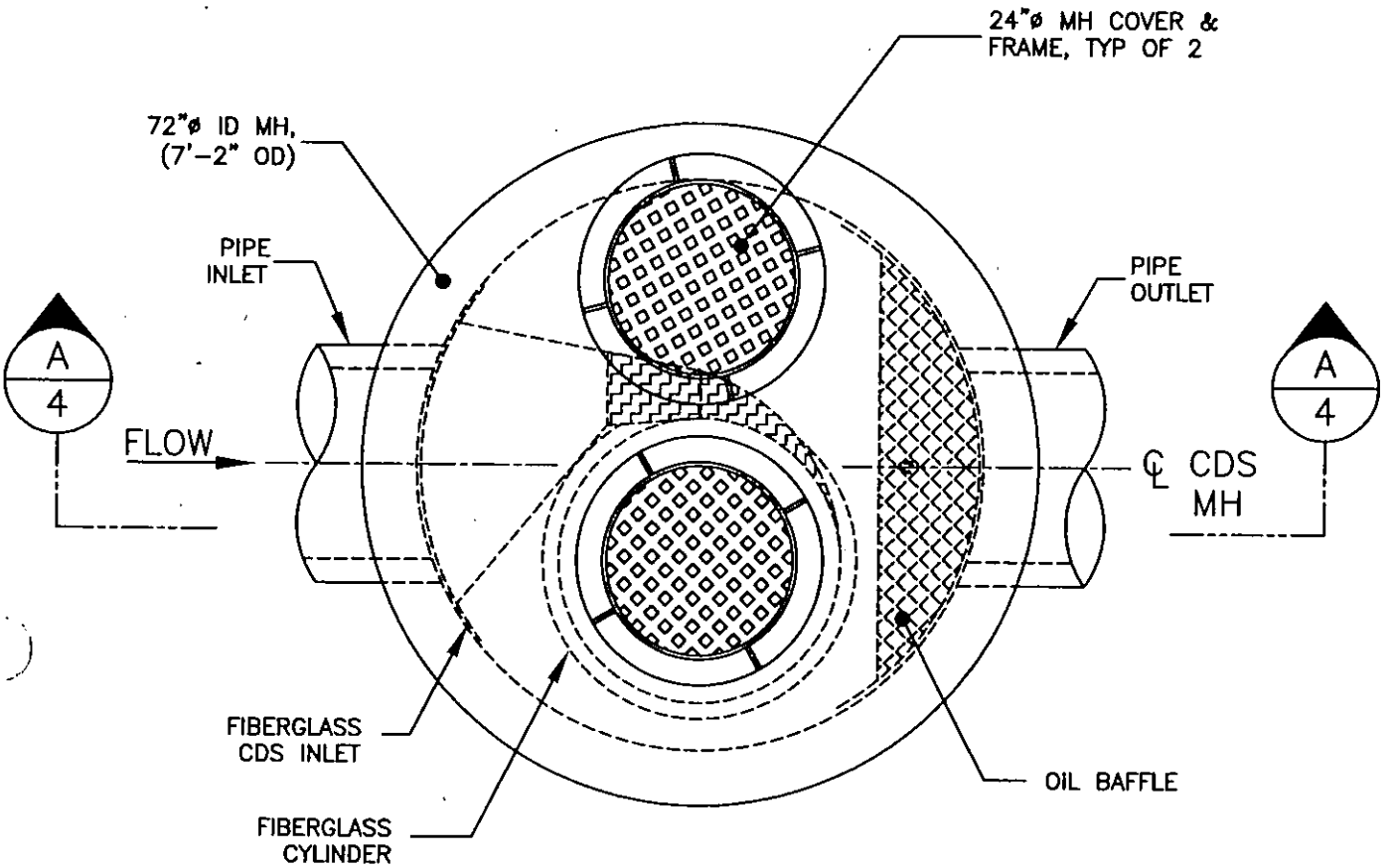


NOTE:
THE INTERNAL COMPONENTS ARE SHOWN IN THE RIGHT-HAND CONFIGURATION-THESE COMPONENTS MAY BE FURNISHED IN THE MIRROR IMAGE TO THAT SHOWN (LEFT-HAND CONFIGURATION).

## CDS MODEL PMSU30_20
### 2 CFS TREATMENT CAPACITY
### STM. WATER TREATMENT UNIT

| | | | |
|---|---|---|---|
| CDS TECHNOLOGIES™ | PROJECT NAME<br>CITY, STATE | JOB# | SCALE 1"=2' |
| | | DATE: 12/30/02 | SHEET 2 |
| | | DRAWN: W. LORSCHEIDER | |
| | | APPROV. | |

# SECTION B–B

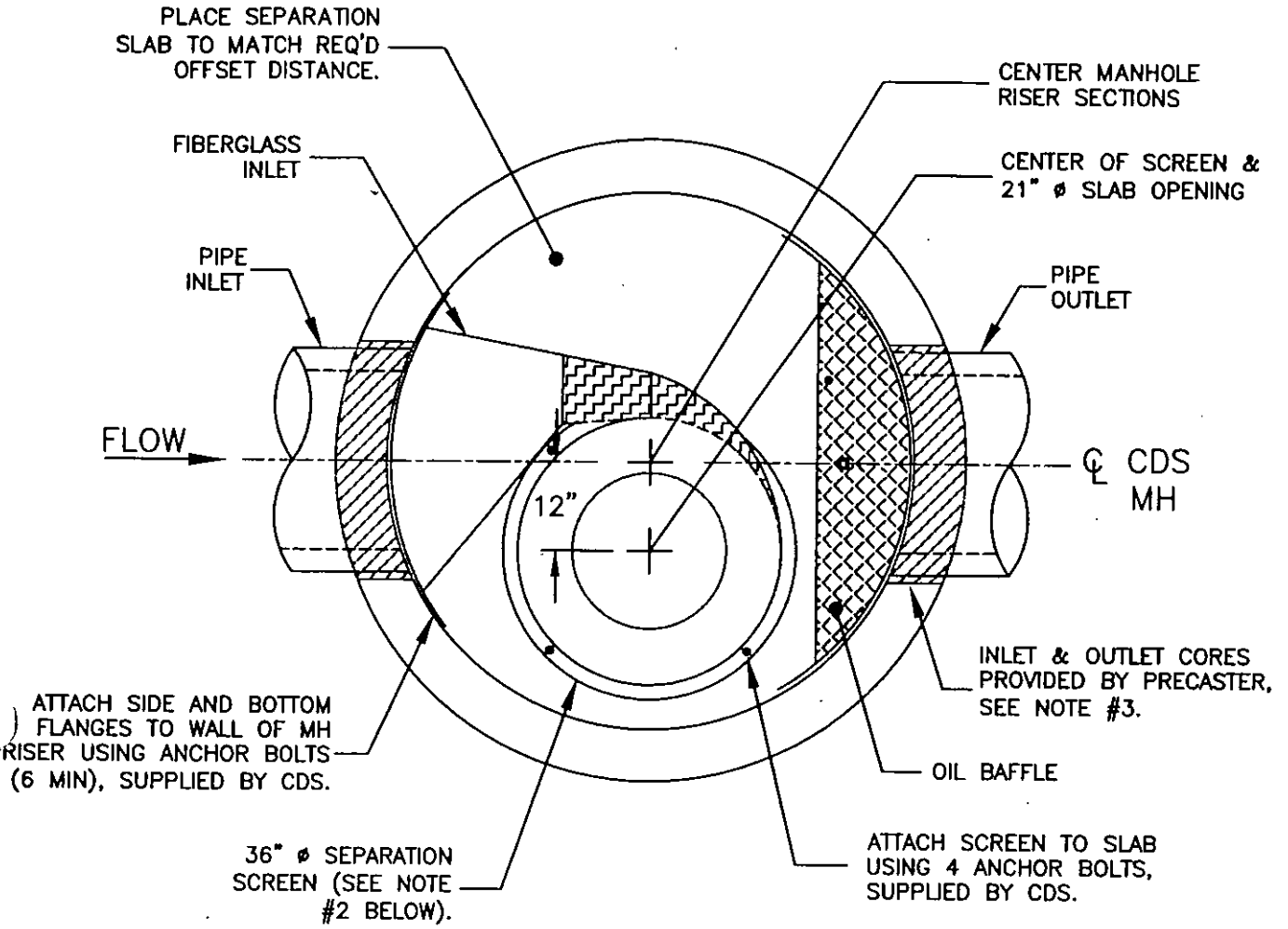


NOTES:

1. THE INTERNAL COMPONENTS ARE SHOWN IN THE RIGHT–HAND CONFIGURATION.
2. FOR PROPER INSTALLATION, GREEN FLANGE ON SCREEN FACES UP; RED FLANGE FACES DOWN AND FASTENS TO SEPARATION SLAB.
3. OVERSIZED CORES ARE PROVIDED TO ACCOUNT FOR DIFFERENT PIPEWALL THICKNESSES–ENSURE SUFFICIENT EXCAVATION DEPTH TO ATTAIN (EXTERNAL) SUMP INVERT ELEVATION (SEE SHEET 3).

## CDS MODEL PMSU30_20
### 2 CFS TREATMENT CAPACITY
### STM. WATER TREATMENT UNIT

| | | | |
|---|---|---|---|
| CDS TECHNOLOGIES™ | PROJECT NAME<br>CITY, STATE | JOB# | SCALE 1"=2' |
| | | DATE: 12/30/02 | SHEET 3 |
| | | DRAWN: W. LORSCHEIDER | |
| | | APPROV. | |

# SECTION A–A
## ELEVATION VIEW

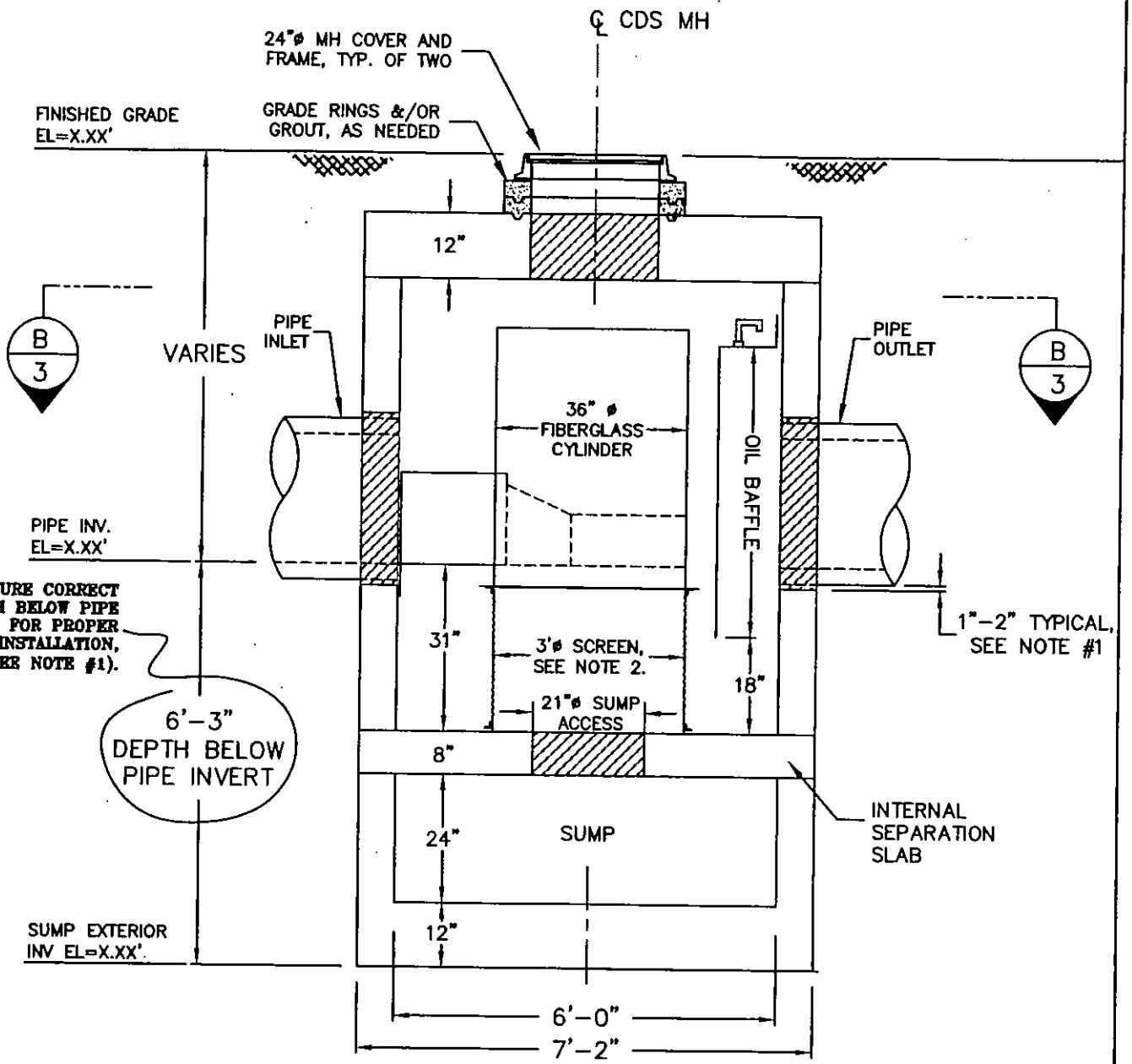


NOTES:

1. OVERSIZED CORES ARE PROVIDED TO ACCOUNT FOR DIFFERENT PIPEWALL THICKNESSES--ENSURE SUFFICIENT EXCAVATION DEPTH TO ATTAIN INDICATED (EXTERNAL) SUMP INVERT ELEVATION.
2. FOR PROPER INSTALLATION, GREEN FLANGE ON SCREEN FACES UP AND FASTENS TO FIBERGLASS CYLINDER FLANGE; RED FLANGE FASTENS TO SEPARATION SLAB WITH PROVIDED ANCHOR BOLTS.

**CDS MODEL PMSU30_20**
**2 CFS TREATMENT CAPACITY**
**STM. WATER TREATMENT UNIT**

| | | | |
|---|---|---|---|
| CDS TECHNOLOGIES™ | PROJECT NAME<br>CITY, STATE | JOB# | SCALE 1:30 |
| | | DATE: 12/30/02 | SHEET |
| | | DRAWN: W. LORSCHEIDER | 4 |
| | | APPROV. | |

# GENERIC / TYPICAL INSTALLATION
# RIGHT HANDED CONFIGURATION SHOWN HERE

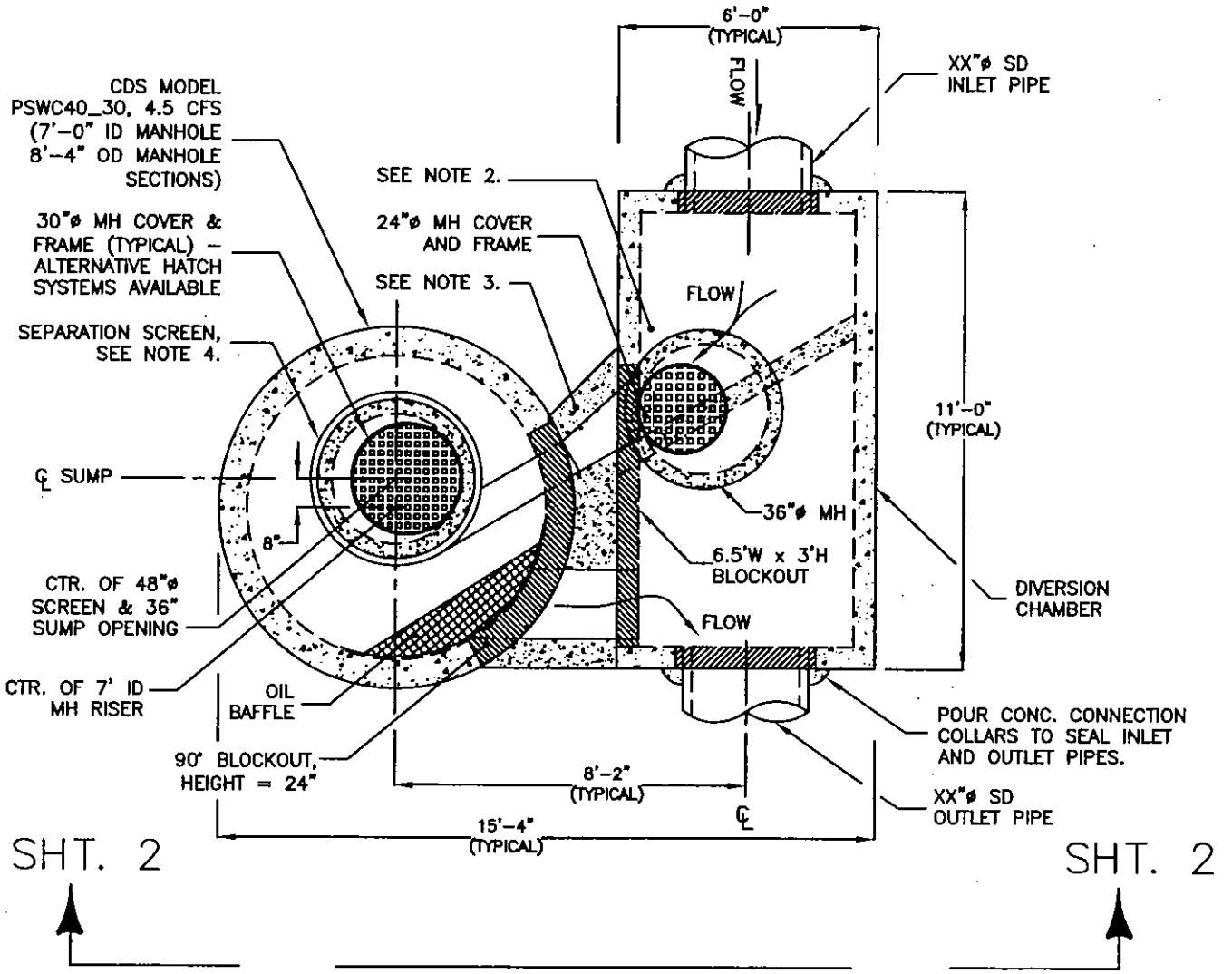


## NOTES:

1. THE INTERNAL COMPONENTS ARE SHOWN IN THE RIGHT-HAND CONFIGURATION–THESE COMPONENTS MAY BE FURNISHED IN THE MIRROR IMAGE TO THAT SHOWN (LEFT-HAND CONFIGURATION).
2. CREATE SMOOTH SWALE TRANSITION THRU DIVERSION BOX.
3. CONNECTION COLLAR POURED IN FIELD, 11" MINIMUM ALL AROUND.
4. FOR PROPER INSTALLATION, GREEN FLANGE ON SCREEN FACES UP FOR RIGHT-HAND CONFIGURATIONS; RED FLANGE FACES UP FOR LEFT-HAND ORIENTED UNITS.

## PLAN VIEW
## CDS UNIT PSWC40_30
## 4.5 CFS CAPACITY
## STORM WATER TREATMENT UNIT

| | | | |
|---|---|---|---|
| CDS TECHNOLOGIES™ PATENTED | PROJECT/ DEVELOPMENT NAME CITY & STATE | DATE 12/3/01 | SCALE 1"=4' |
| | | DRAWN J.S.F. | SHEET 1 |
| | | APPROV. R. HOWARD | |

# GENERIC / TYPICAL INSTALLATION
# RIGHT HANDED CONFIGURATION SHOWN HERE

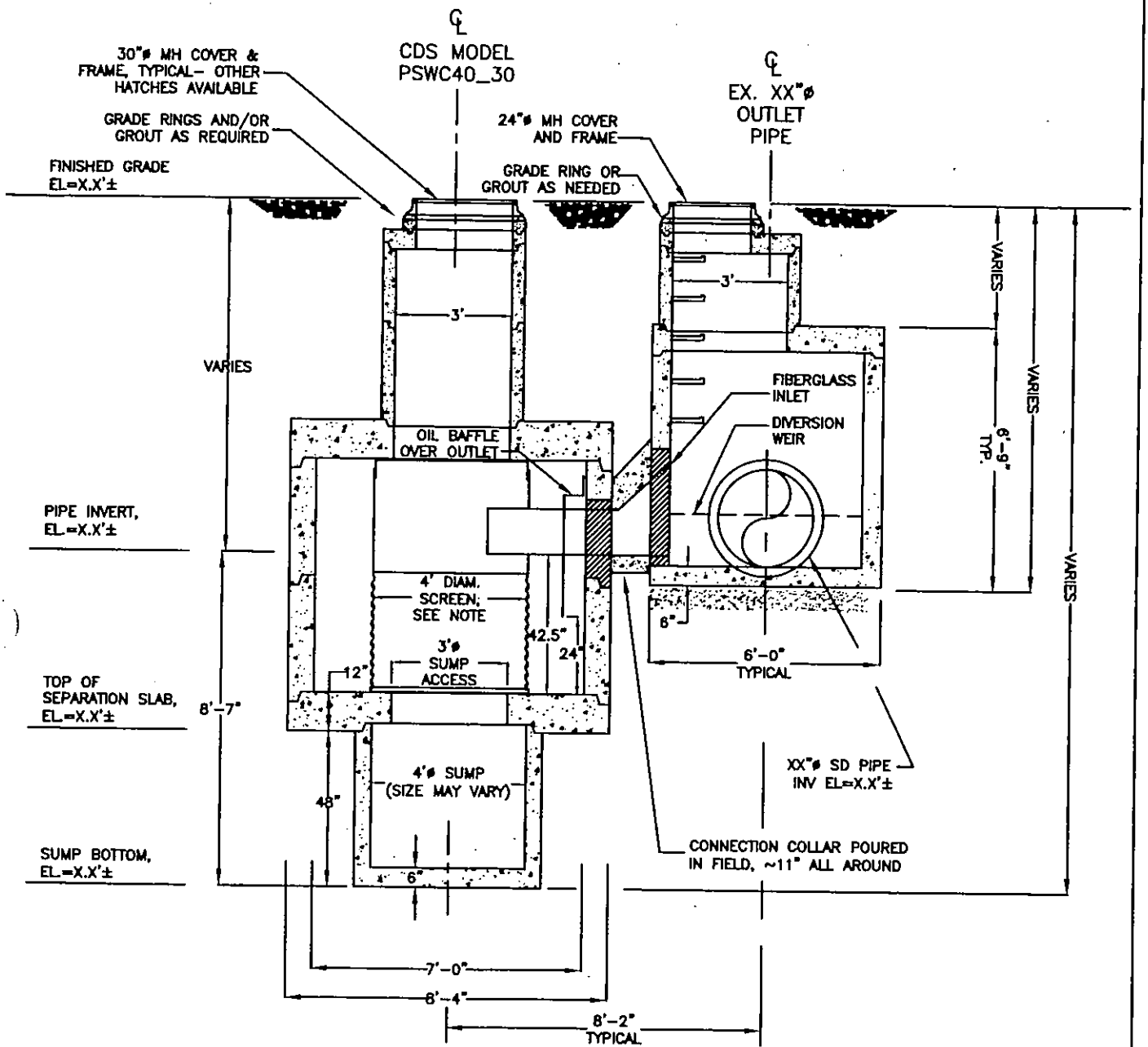


## ELEVATION VIEW
## CDS UNIT PSWC40_30
## 4.5 CFS CAPACITY
## STORM WATER TREATMENT UNIT

NOTE:
FOR PROPER INSTALLATION (IN RIGHT HAND ORIENTATION), GREEN FLANGE BOLTS TO INLET RISER WITH FOUR 1/2" BOLTS; RED FLANGE FASTENS TO SEPARATION SLAB USING FOUR EXPANSION ANCHORS (316 SS HARDWARE SUPPLIED BY CDS). REVERSE PROCESS FOR LEFT HAND ORIENTATION.

| | | | |
|---|---|---|---|
| CDS TECHNOLOGIES™ PATENTED | PROJECT/ DEVELOPMENT NAME CITY & STATE | DATE 12/3/01 | SCALE 1"=4' |
| | | DRAWN J.S.F. | SHEET 2 |
| | | APPROV. R. HOWARD | |

# GENERIC / TYPICAL INSTALLATION
# RIGHT HANDED CONFIGURATION SHOWN HERE

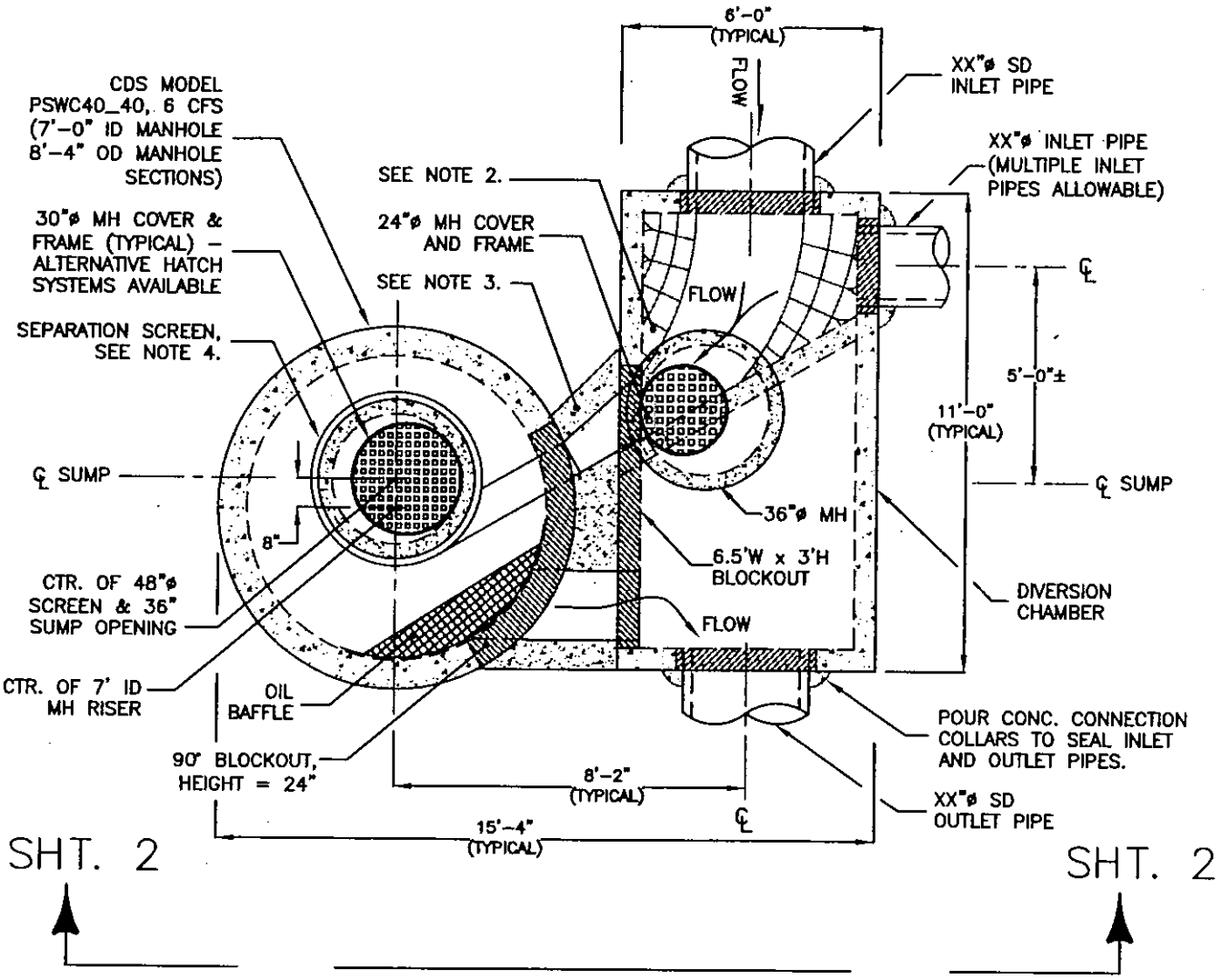


## NOTES:

1. THE INTERNAL COMPONENTS ARE SHOWN IN THE RIGHT-HAND CONFIGURATION-THESE COMPONENTS MAY BE FURNISHED IN THE MIRROR IMAGE TO THAT SHOWN (LEFT-HAND CONFIGURATION).
2. CREATE SMOOTH SWALE TRANSITION THRU DIVERSION BOX WITH SECONDARY CONCRETE POUR IN FIELD.
3. CONNECTION COLLAR POURED IN FIELD, 11" MINIMUM ALL AROUND.
4. FOR PROPER INSTALLATION, GREEN FLANGE ON SCREEN FACES UP FOR RIGHT-HAND CONFIGURATIONS; RED FLANGE FACES UP FOR LEFT-HAND ORIENTED UNITS.

## PLAN VIEW
## CDS UNIT PSWC40_40
## 6 CFS CAPACITY
## STORM WATER TREATMENT UNIT

| | | | |
|---|---|---|---|
| CDS TECHNOLOGIES™ PATENTED | PROJECT/ DEVELOPMENT NAME CITY & STATE | DATE 12/3/01 | SCALE 1"=4' |
| | | DRAWN J.S.F. | SHEET 1 |
| | | APPRDV. R. HOWARD | |

# GENERIC / TYPICAL INSTALLATION
# RIGHT HANDED CONFIGURATION SHOWN HERE

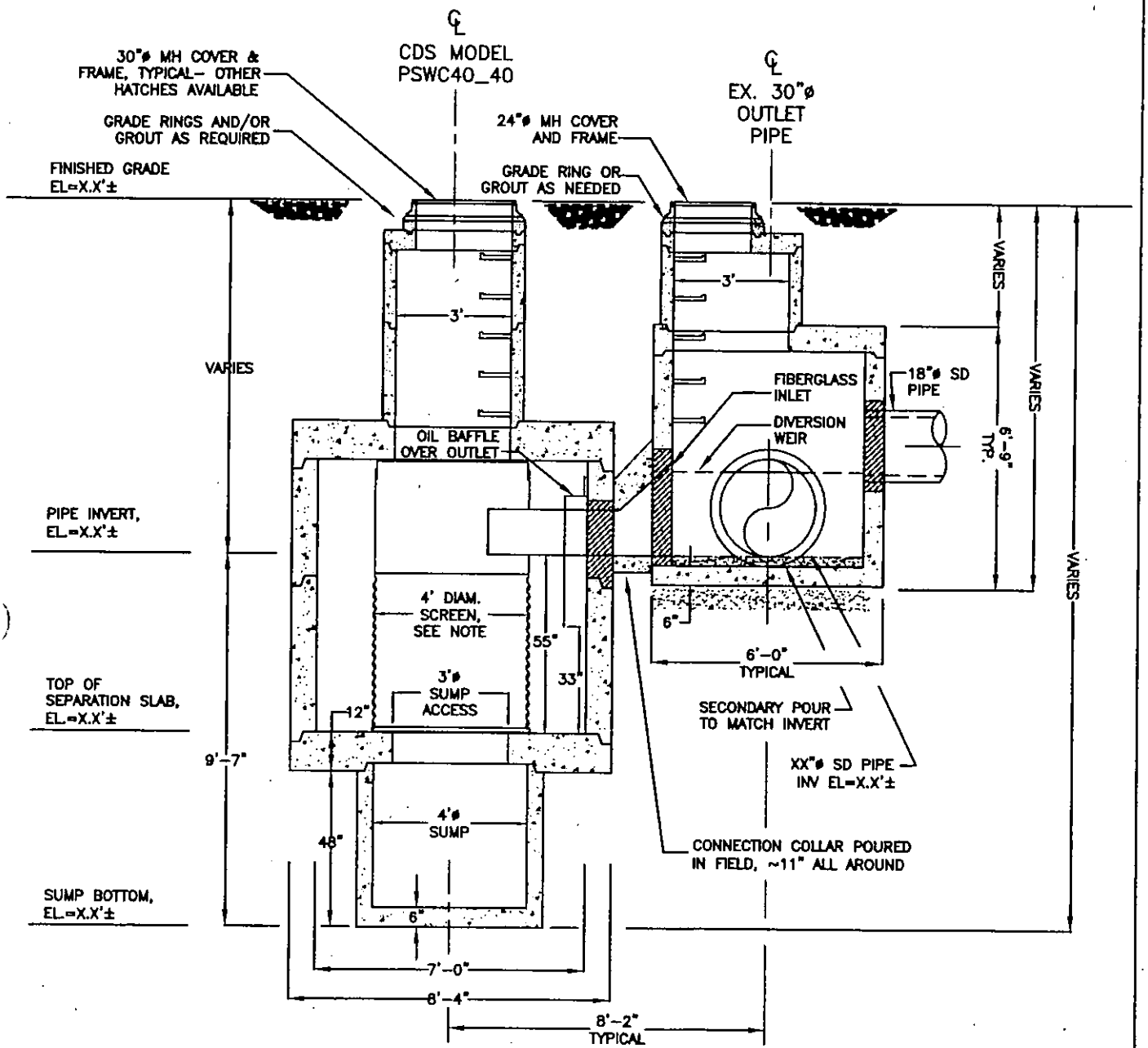


## ELEVATION VIEW
## CDS UNIT PSWC40_40
## 6 CFS CAPACITY
## STORM WATER TREATMENT UNIT

NOTE:
FOR PROPER INSTALLATION (IN RIGHT HAND ORIENTATION), GREEN FLANGE BOLTS TO INLET RISER WITH FOUR 1/2" BOLTS; RED FLANGE FASTENS TO SEPARATION SLAB USING FOUR EXPANSION ANCHORS (316 SS HARDWARE SUPPLIED BY CDS). REVERSE PROCESS FOR LEFT HAND ORIENTATION.

| | | | |
|---|---|---|---|
| CDS TECHNOLOGIES™ PATENTED | PROJECT/ DEVELOPMENT NAME CITY & STATE | DATE 12/3/01 | SCALE 1"=4' |
| | | DRAWN J.S.F. | SHEET 2 |
| | | APPROV. R. HOWARD | |

# GENERIC / TYPICAL INSTALLATION
# LEFT HANDED CONFIGURATION SHOWN HERE

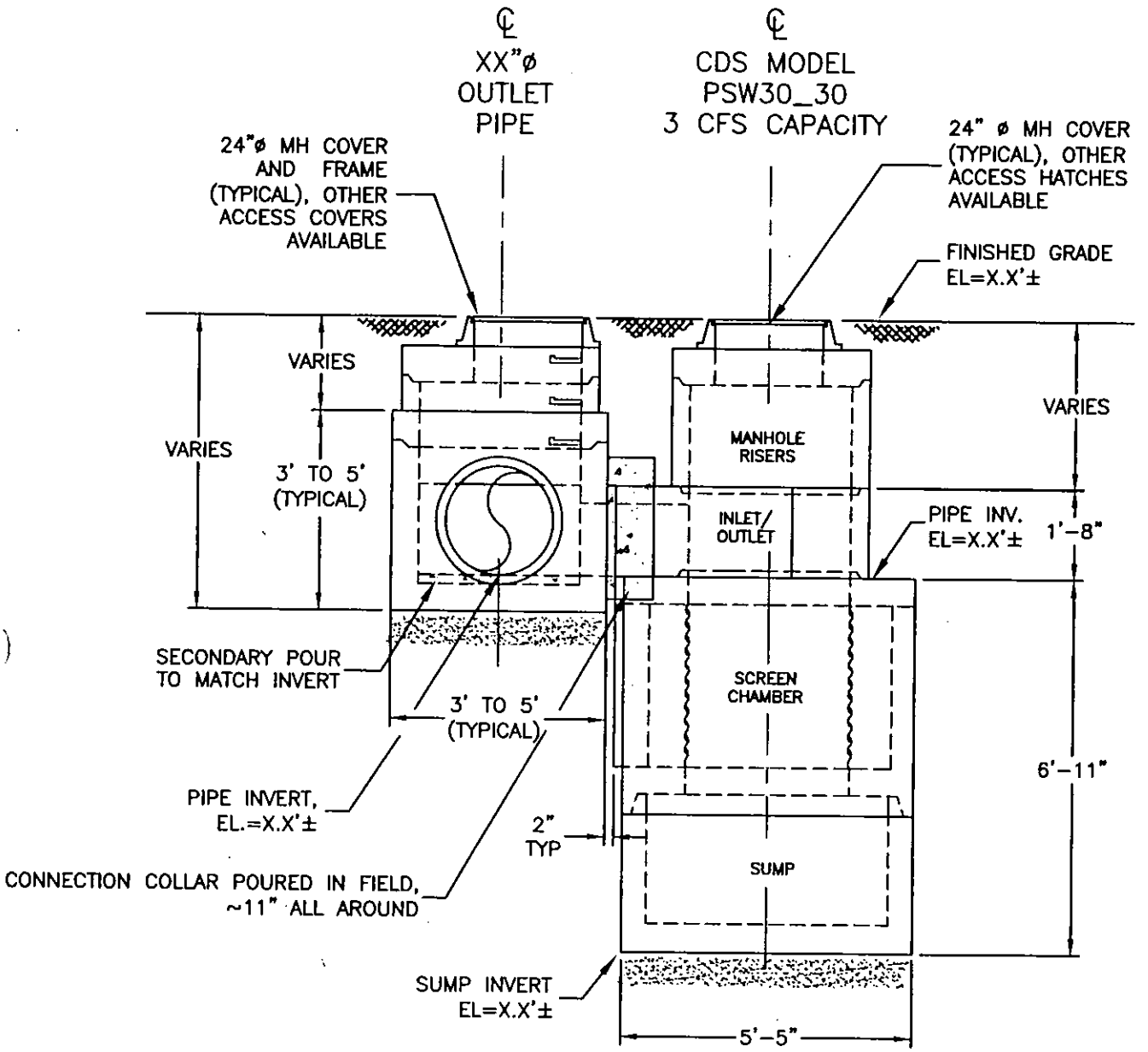


## ELEVATION VIEW

CDS MODEL PSW30_30
3 CFS CAPACITY
STORM WATER TREATMENT UNIT

| | | | |
|---|---|---|---|
| CDS TECHNOLOGIES™ PATENTED | PROJECT/ DEVELOPMENT NAME CITY & STATE | DATE 1/23/02 | SCALE 1"=3' |
| | | DRAWN J.S.F. | SHEET 4 |
| | | APPROV. | |

# GENERIC / TYPICAL INSTALLATION
# (LEFT HAND UNIT SHOWN)

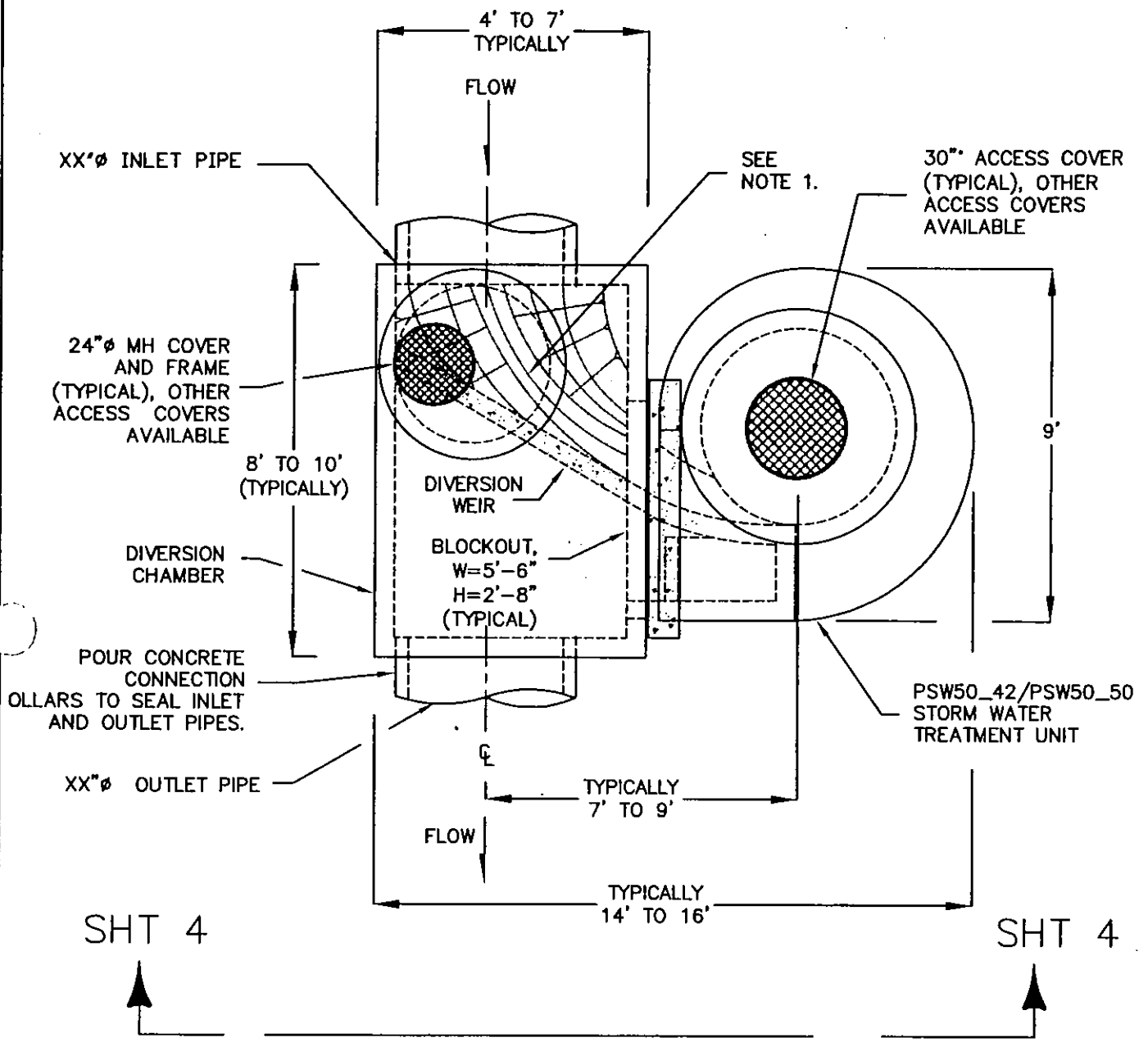


**PLAN VIEW**
**CDS UNIT PSW50_42/PSW50_50**
**9 CFS/11CFS CAPACITY**
**STORM WATER TREATMENT UNIT**

NOTE:
1. CREATE SMOOTH SWALE TRANSITION THROUGH DIVERSION BOX WITH SECONDARY CONCRETE POUR IN FIELD

| | | | |
|---|---|---|---|
| CDS™ TECHNOLOGIES PATENTED | PROJECT / DEVELOPMENT NAME CITY & STATE | DATE 01/23/02 | SCALE 1"=4' |
| | | DRAWN W. STEIN | SHEET 3 |
| | | APPROV. | |

# GENERIC / TYPICAL INSTALLATION
# (LEFT HAND UNIT SHOWN)

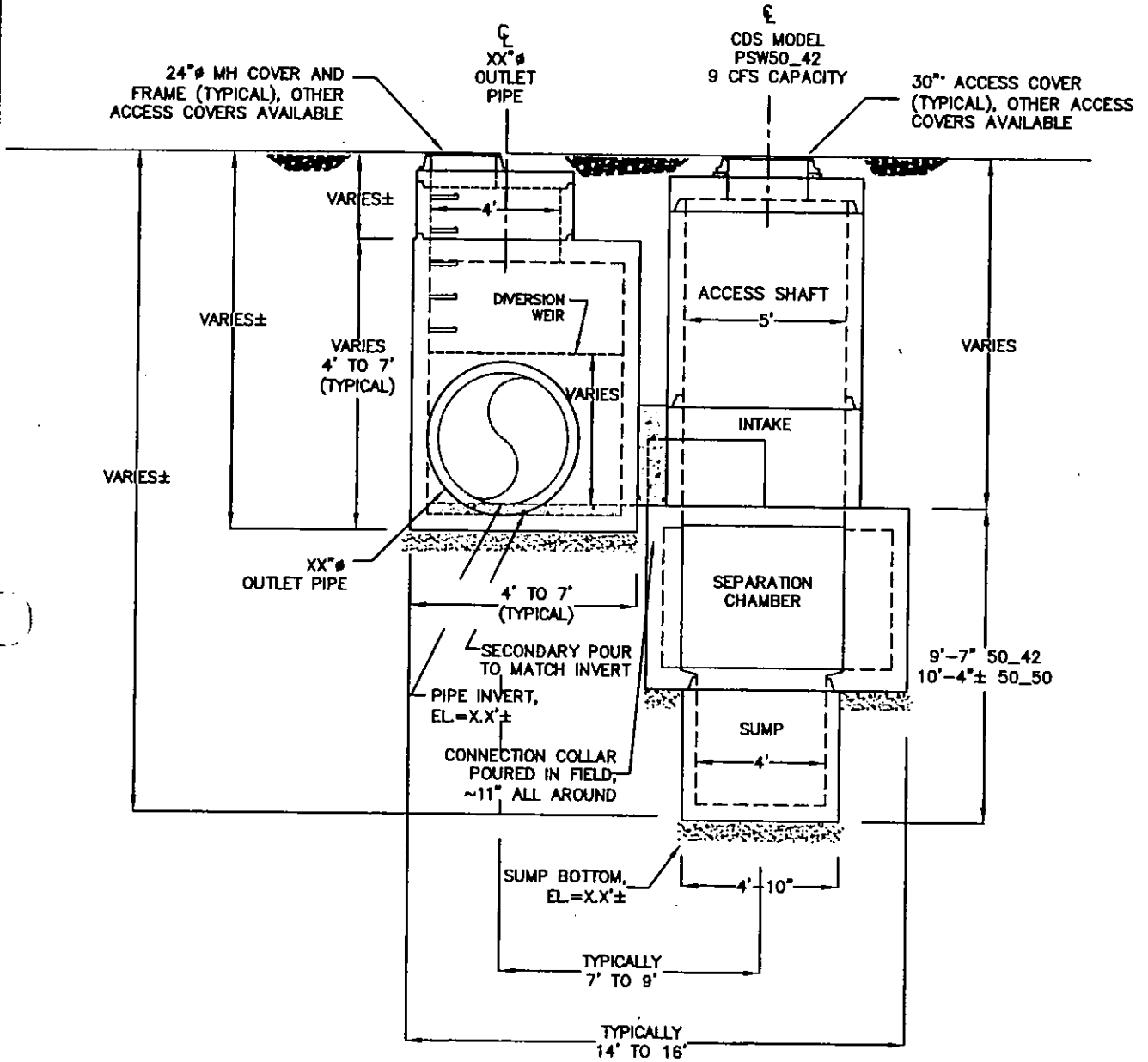


**ELEVATION VIEW**
**CDS UNIT PSW50_42/PSW50_50**
**9 CFS/11 CFS CAPACITY**
**STORM WATER TREATMENT UNIT**

| | | | |
|---|---|---|---|
| CDS TECHNOLOGIES™ PATENTED | PROJECT / DEVELOPMENT NAME CITY & STATE | DATE 01/23/02 | SCALE 1"=5' |
| | | DRAWN W. STEIN | SHEET 4 |
| | | APPROV. | |

# GENERIC / TYPICAL INSTALLATION
# (LEFT HAND UNIT SHOWN)

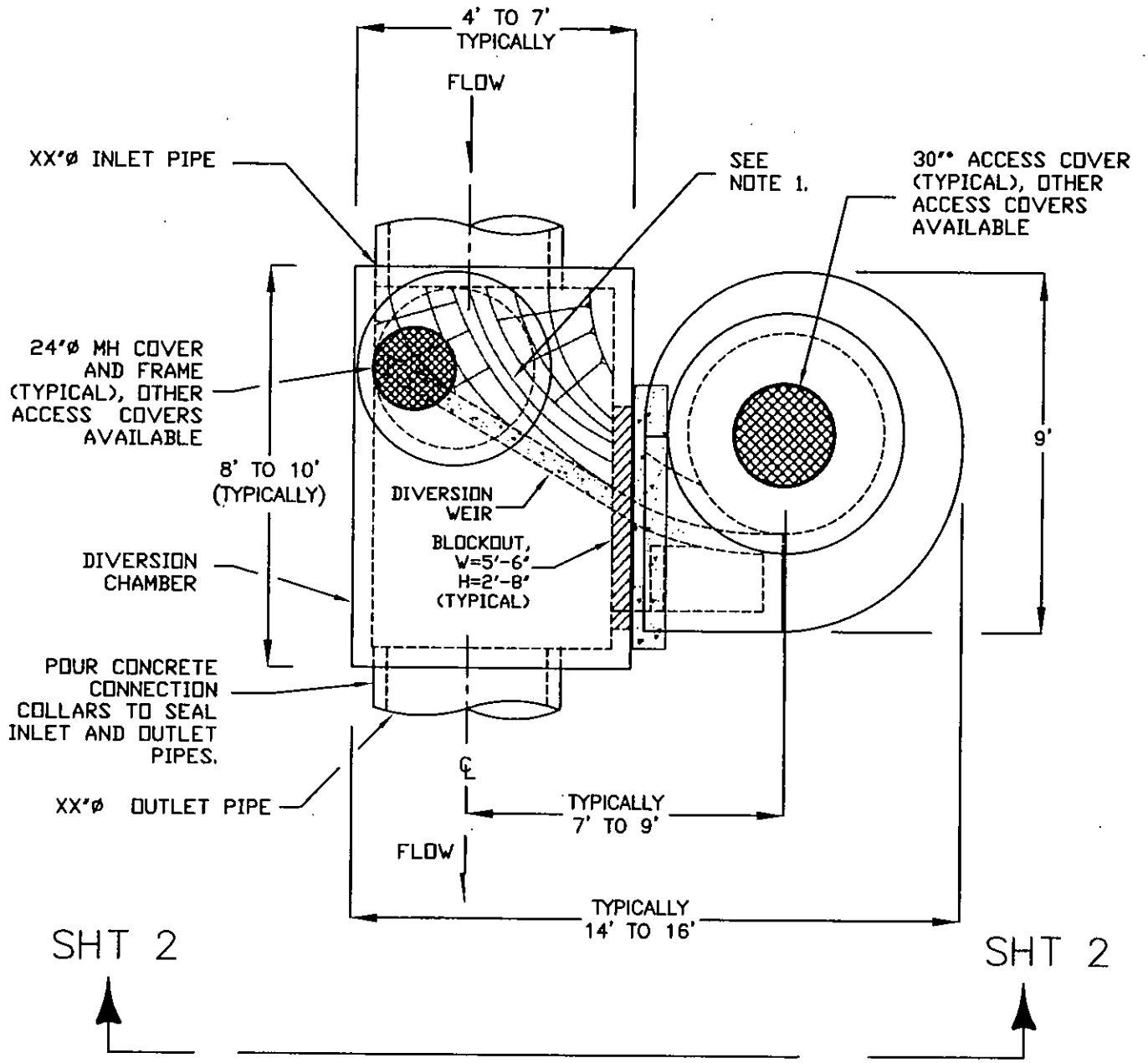


**PLAN VIEW**
**CDS UNIT PSW50_50**
**11 CFS CAPACITY**
**STORM WATER TREATMENT UNIT**

NOTES:

1. CREATE SMOOTH SWALE TRANSITION THROUGH DIVERSION BOX WITH SECONDARY CONCRETE POUR IN FIELD.

| | | | |
|---|---|---|---|
| CDS™ TECHNOLOGIES PATENTED | PROJECT / DEVELOPMENT NAME CITY & STATE | DATE 3/12/00 | SCALE 1"=4' |
| | | DRAWN W. STEIN | SHEET 5 |
| | | APPROV. | |

# GENERIC / TYPICAL INSTALLATION
# (LEFT HAND UNIT SHOWN)

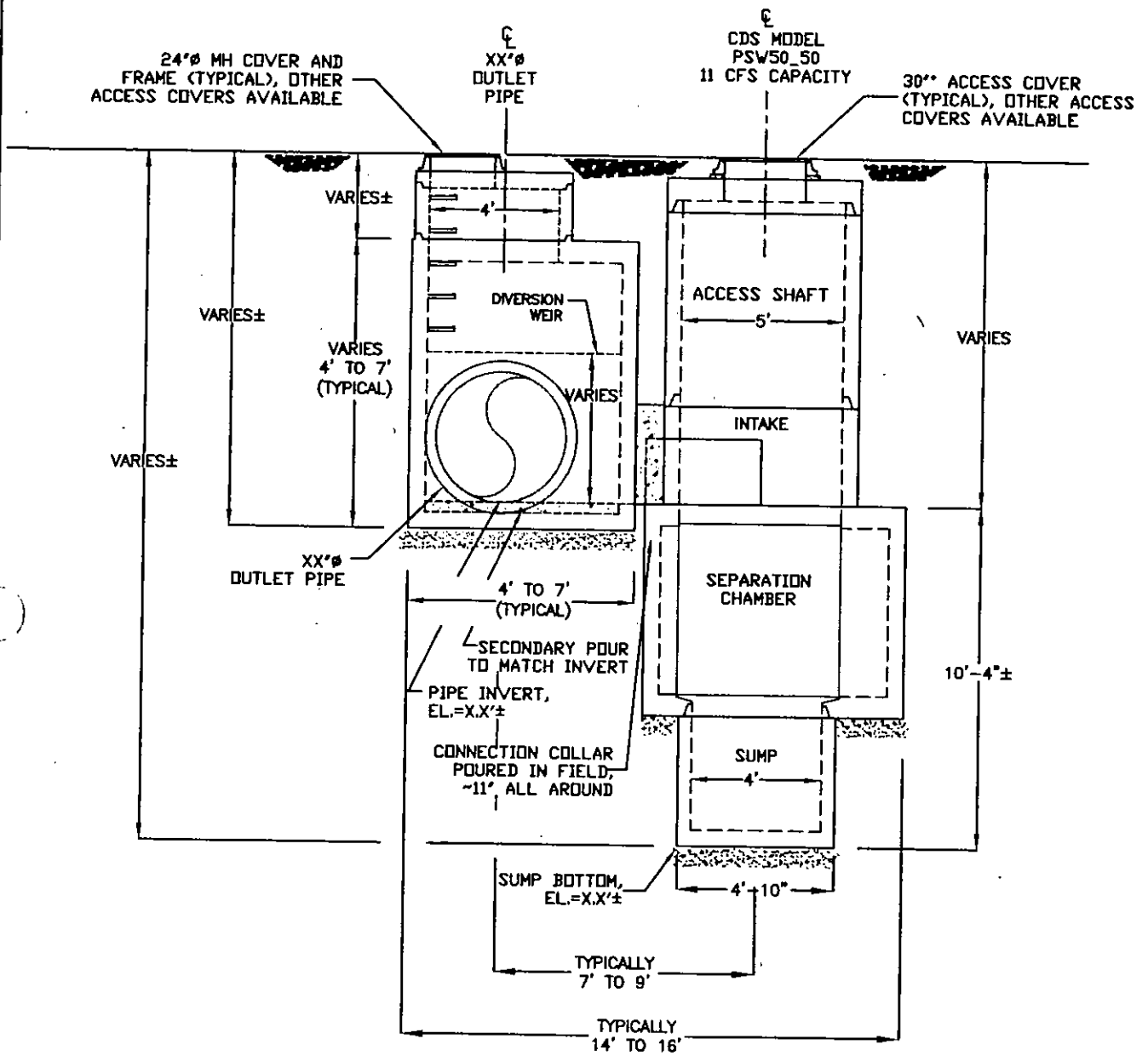


**ELEVATION VIEW**
**CDS UNIT PSW50_50, 11 CFS CAPACITY**
**STORM WATER TREATMENT UNIT**

| | | | |
|---|---|---|---|
| CDS TECHNOLOGIES™ PATENTED | PROJECT / DEVELOPMENT NAME CITY & STATE | DATE 4/3/01 | SCALE 1"=5' |
| | | DRAWN W. STEIN | SHEET 6 |
| | | APPROV. | |

# GENERIC / TYPICAL INSTALLATION
# LEFT HANDED CONFIGURATION SHOWN HERE

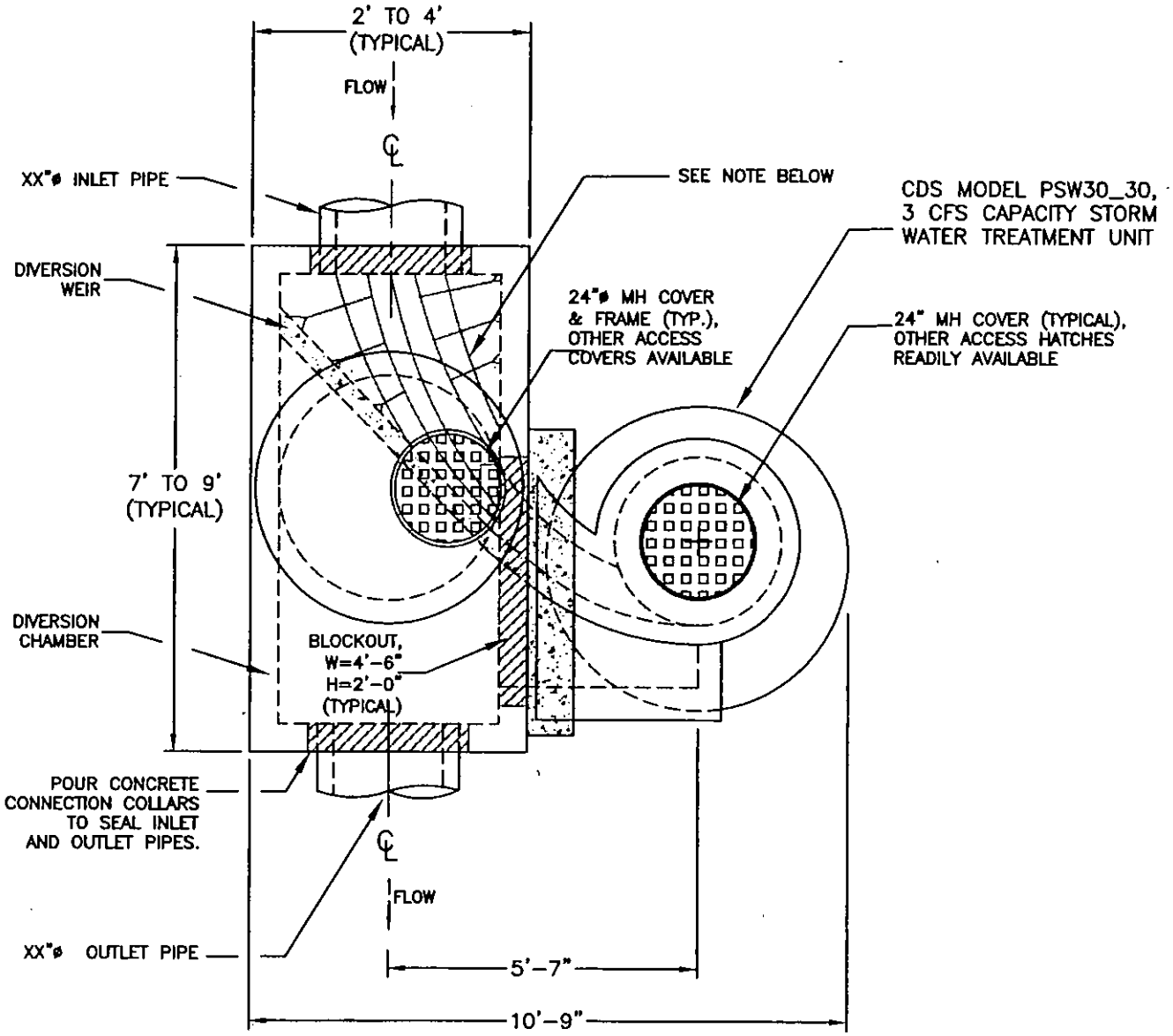


## PLAN VIEW
## CDS MODEL PSW30_30
## 3 CFS CAPACITY
## STORM WATER TREATMENT UNIT

NOTE(S):

CREATE SMOOTH SWALE TRANSITION THRU DIVERSION BOX W/ SECONDARY CONCRETE POUR IN FIELD.

| | | | |
|---|---|---|---|
| CDS™ TECHNOLOGIES PATENTED | PROJECT/ DEVELOPMENT NAME CITY & STATE | DATE 01/23/02 | SCALE 1"=3' |
| | | DRAWN J.S.F. | SHEET 3 |
| | | APPROV. | |

# TABLE — A
# MODEL PERFORMANCE CAPABILITY

| | | MODEL NUMBER | DESIGN FLOW RATE CFS | MGD | $M^3$/sec | REFERENCE PAGE |
|---|---|---|---|---|---|---|
| PRECAST | INLINE | PMIU20_15 | 0.7 | 0.5 | .02 | 9 |
| | | PMSU20_15_4 | 0.7 | 0.5 | .02 | |
| | | PMSU20_15 | 0.7 | 0.5 | .02 | |
| | | PMSU20_20 | 1.1 | 0.7 | .03 | |
| | | PMSU20_25 | 1.6 | 1.0 | .05 | |
| | | PMSU30_20 | 2.0 | 1.3 | .06 | |
| | | PMSU30_30 | 3.0 | 1.9 | .08 | |
| | | PMSU40_30 | 4.5 | 3.0 | .13 | |
| | | PMSU40_40 | 6.0 | 3.9 | .17 | |
| | OFFLINE | PSWC30_30 | 3.0 | 1.9 | .08 | 10 |
| | | PSWC40_40 | 6.0 | 3.9 | .17 | |
| | | PSWC56_40 | 9.0 | 5.8 | .25 | |
| | | PSWC56_53 | 14 | 9.0 | .40 | |
| | | PSWC56_68 | 19 | 12 | .54 | |
| | | PSWC56_78 | 25 | 16 | .71 | |
| | | PSW30_30 | 3.0 | 1.9 | .08 | |
| | | PSW50_42 | 9.0 | 5.8 | .25 | |
| | | PSW50_50 | 11 | 7.1 | .31 | 11 |
| | | PSW70_70 | 26 | 17 | .74 | |
| | | PSW100_60 | 30 | 19 | .85 | |
| | | PSW100_80 | 50 | 32 | 1.4 | |
| | | PSW100_100 | 64 | 41 | 1.8 | |
| CAST IN PLACE | | CSW150_134 | 148 | 95 | 4.2 | 12 |
| | | CSW200_164 | 270 | 174 | 7.6 | |
| | | CSW240_160 | 300 | 194 | 8.5 | |

Conversion: 1cfs ≅ 0.0283 cubic meters per second, or 1 $M^3$/sec ≅ 35.31cfs
1cfs ≅ 0.64512 MGD or 1MGD ≅ 1.55 cfs

## MODEL DESIGNATIONS

PMSU= Precast Manhole Storm Water Unit
PSWC= Precast Storm Water Concentric
PSW = Precast Storm Water
CSW = Cast in Place Storm Water

X X _ X X (L or R)*

Screen Diameter
Screen Height
Feet
Tenths of a Foot
Tenths of a Foot
Feet

* L or R designates the location of the CDS when looking downstream. (L)eft represents being placed on the Left side of the stormdrain, (R)ight is placed on the right side.

# GENERAL DESCRIPTION OF UNIT

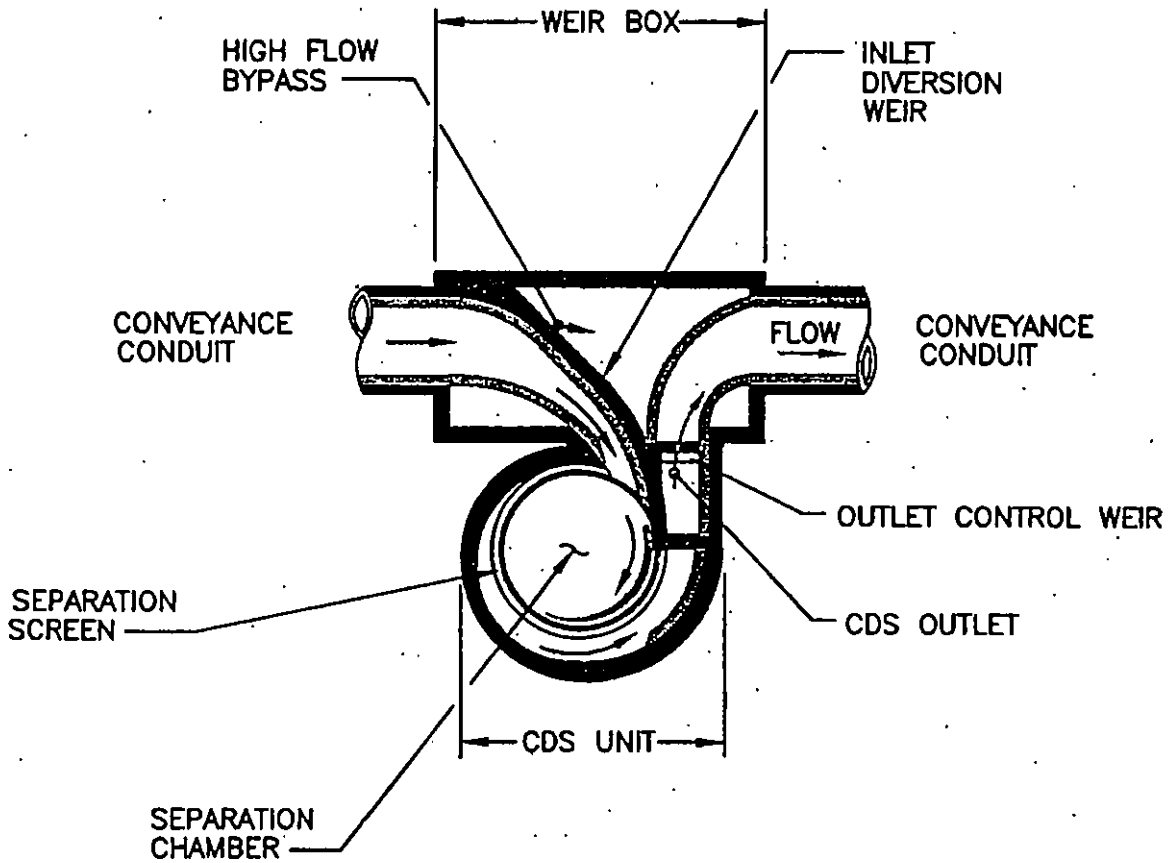


## PLAN VIEW

(RIGHT HAND UNIT)



CDS TECHNOLOGIES

# GENERAL DESCRIPTION OF UNIT

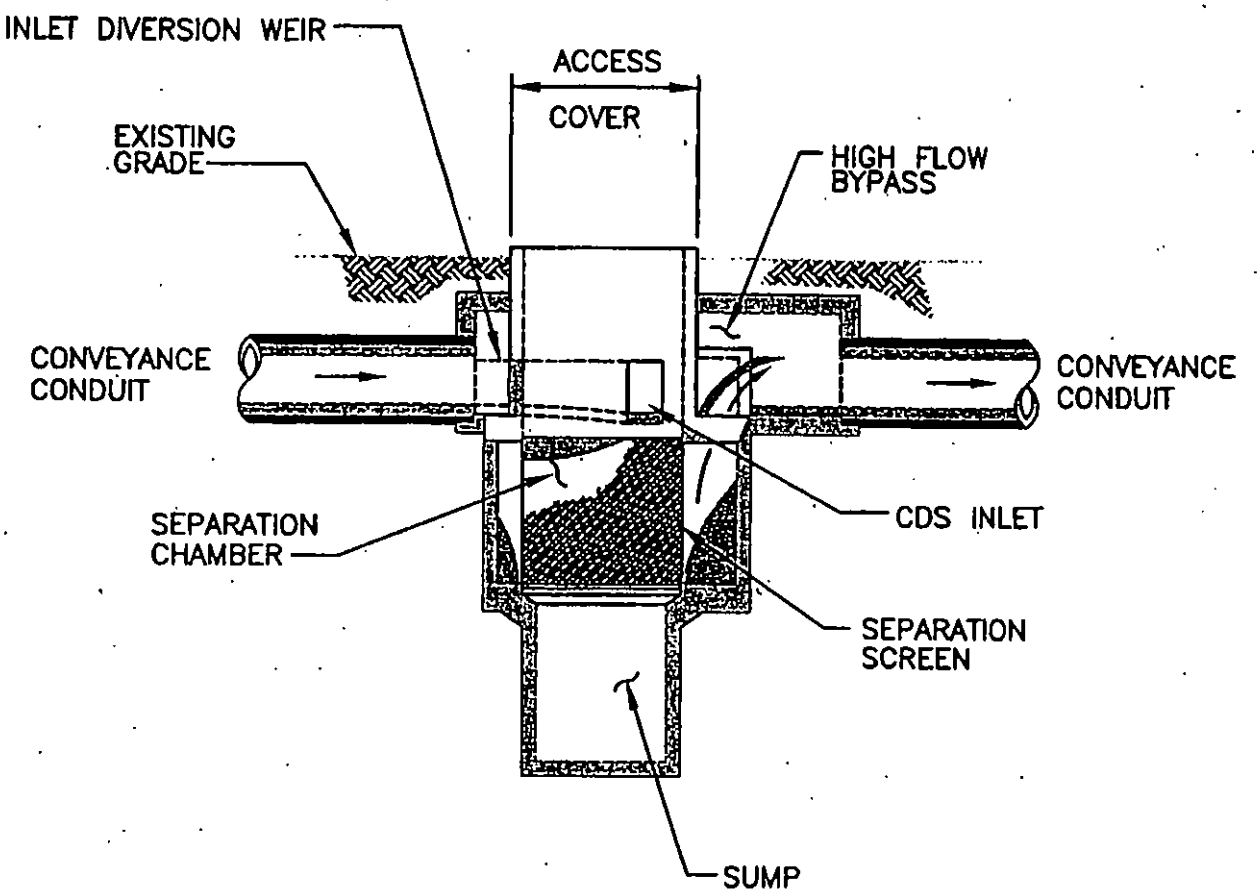


ELEVATION

# PRECAST MANHOLE MODELS

## PROCESSES FLOWS 0.75 TO 6.5 CFS

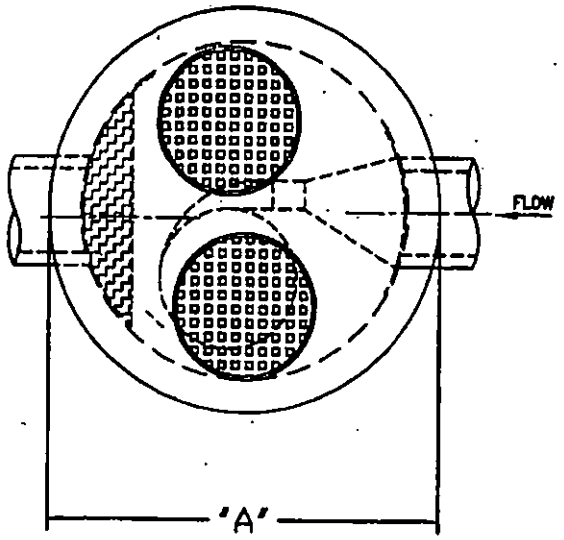


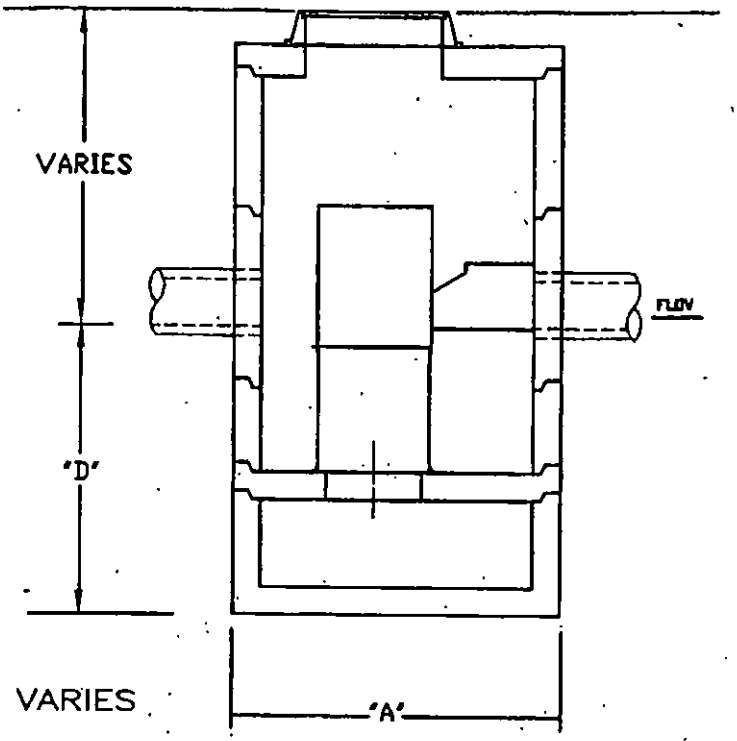


A = FOOT PRINT DIAMETER

D = DEPTH BELOW PIPE INVERT, VARIES

| PRECAST MODEL NUMBER | **TREATMENT DESIGN FLOW RATE | | | ***DESIGN HEAD LOSS @ DESIGN TREATMENT FLOW RATE | | SCREEN DIA./HT. | DEPTH BELOW PIPE INVERT "D" | FOOT PRINT DIAMETER "A" |
|---|---|---|---|---|---|---|---|---|
| | cfs | MGD | $m^3$/sec | ft. | m | ft. | ft. | ft. |
| PMIU20_15 | 0.7 | 0.49 | 0.021 | 0.45 | 0.11 | 2/1.5 | 4.2 | 4.8 |
| PMSU20_15_4 | 0.7 | 0.49 | 0.021 | 0.35 | 0.11 | 2/1.5 | 3.5 – 4 | 4.8 |
| PMSU20_15 | 0.7 | 0.49 | 0.021 | 0.35 | 0.11 | 2/1.5 | 5.1 | 6.0 |
| PMSU20_20 | 1.20 | 0.78 | 0.034 | 0.48 | 0.15 | 2/2.0 | 5.7 | 6.0 |
| PMSU20_25 | 1.68 | 1.10 | 0.048 | 0.62 | 0.19 | 2/2.5 | 6.0 | 6.0 |
| PMSU30_20 | 2.0 | 1.29 | 0.056 | 0.65 | 0.20 | 3/2.0 | 6.2 | 7.2 |
| PMSU30_30 | 3.0 | 1.94 | 0.085 | 0.70 | 0.21 | 3/2.8 | 7.2 | 7.2 |
| PMSU40_30 | 4.5 | 3.0 | 0.13 | 0.85 | 0.26 | 4/3.0 | 8.6 | 9.5 |
| PMSU40_40 | 6.0 | 3.9 | 0.17 | 0.88 | 0.27 | 4/4.0 | 9.6 | 9.5 |

*Standard screen opening is 4700 microns (.185 in.). Screens also available in 2400 microns (.095 in.).

**This is the minimum flow that will receive treatment before bypass is allowed. These precast manhole units are capable of by passing the Q25 year event. CDS Engineers are readily available to provide hydraulic consultations on all applications.

***The headloss during a bypass event is a function of the velocity head. The typical coefficient of headloss "$K_{CDS}$" ranges from 1.3 to 2.5 $H_{CDS} = K_{CDS}\left(V^2/2_g\right) \Rightarrow \left[\frac{1.3}{2.5}\right] V^2/2_g$

# PRECAST CONCENTRIC MODELS

## PROCESSES FLOWS 3 TO 25 CFS

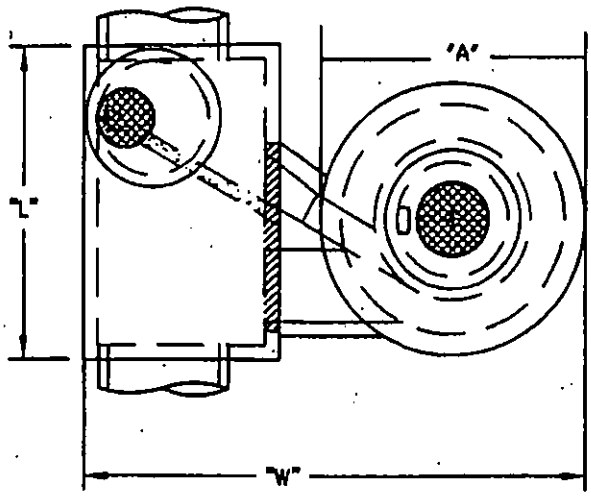


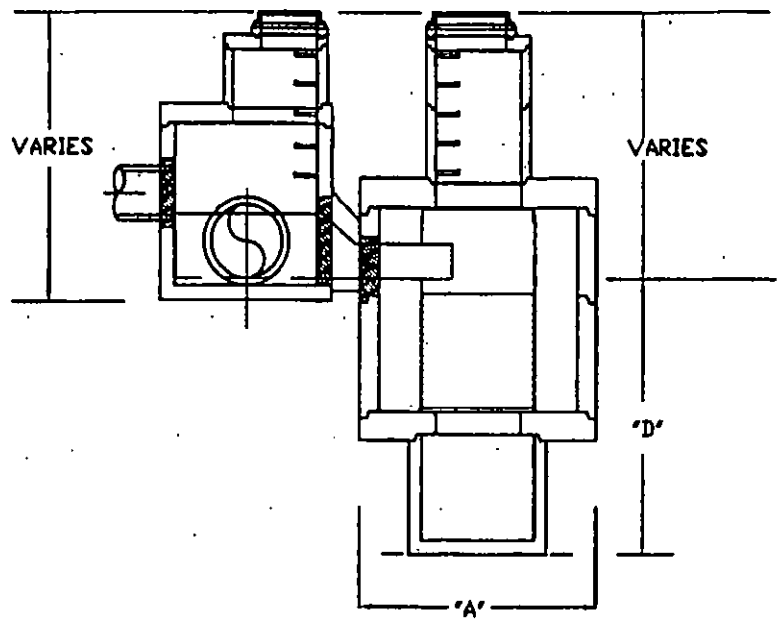


A = FOOT PRINT DIAMETER
D = DEPTH BELOW PIPE INVERT
W = VARIES 15' TO 18' (TYPICAL)
L = 8–11' TYPICAL

| PRECAST MODEL NUMBER | **TREATMENT DESIGN FLOW RATE | | | ***DESIGN HEAD LOSS @ DESIGN TREATMENT FLOW RATE | | SCREEN DIA./HT. | DEPTH BELOW PIPE INVERT "D" | FOOT PRINT DIAMETER "A" |
|---|---|---|---|---|---|---|---|---|
| | cfs | MGD | $m^3$/sec | ft. | m | ft. | ft. | ft. |
| PSWC30_30 | 3.0 | 1.9 | 0.08 | 0.71 | 0.22 | 3.0/2.8 | 8.2 | 7.2 |
| PSWC40_40 | 6.5 | 4.2 | 0.18 | 1.00 | 0.30 | 4.0/4.0 | 9.6 | 8.3 |
| PSWC56_40 | 9.1 | 5.9 | 0.26 | 1.11 | 0.34 | 5.6/4.0 | 9.6 | 9.5 |
| PSWC56_53 | 14 | 9.1 | 0.40 | 1.48 | 0.45 | 5.6/5.3 | 10.9 | 9.5 |
| PSWC56_68 | 20.4 | 13.2 | 0.58 | 1.91 | 0.58 | 5.6/6.8 | 12.6 | 9.5 |
| PSWC56_78 | 25.1 | 16.2 | 0.71 | 2.19 | 0.67 | 5.6/7.8 | 13.6 | 9.5 |

*Standard screen opening is 4700 microns (.185 in.). Screens also available in 2400 microns (.095 in.).

**This is the minimum flow that will receive treatment before bypass is allowed. These offline units are capable of unlimited bypass flow rates. CDS Engineers are readily available to provide hydraulic consultations on all applications.

***The headloss during a bypass event is a function of the velocity head. The typical coefficient of headloss "$K_{CDS}$" ranges from 1.3 to 2.5 $H_{CDS} = K_{CDS}\left(V^2/2_g\right) \Rightarrow \left[\frac{1.3}{2.5}\right] V^2/2_g$

# PRECAST MODELS

## PROCESSES FLOWS 3 TO 64 CFS

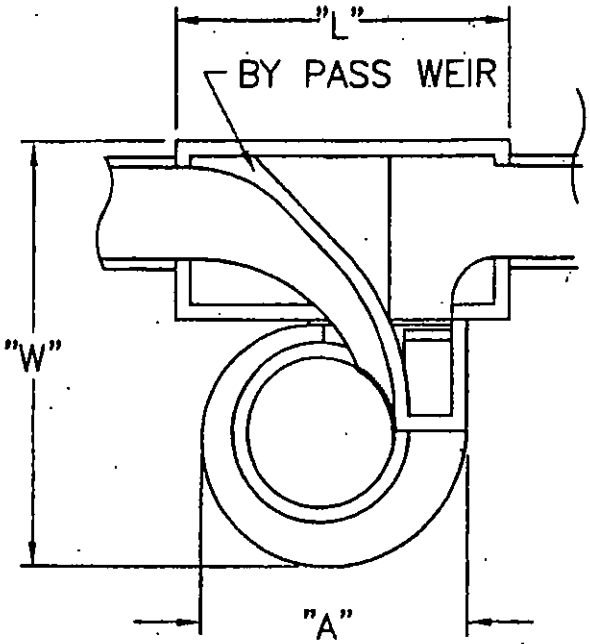


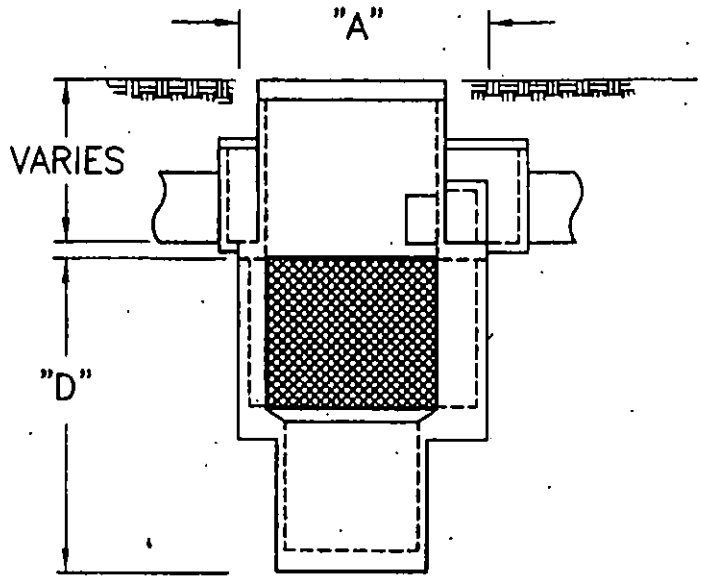


W = (2.5 to 3.0 x Screen Dia.) Varies with site conditions
L = (2.0 to 3.0 x Screen Dia.) Varies with site conditions

| PRECAST MODEL NUMBER | **TREATMENT DESIGN FLOW RATE | | | ***DESIGN HEAD LOSS @ DESIGN TREATMENT FLOW RATE | | SCREEN DIA./HT. | DEPTH BELOW PIPE INVERT "D" | FOOT PRINT DIAMETER "A" |
|---|---|---|---|---|---|---|---|---|
| | cfs | MGD | $m^3$/sec | ft. | m | ft. | ft. | ft. |
| PSW30_30 | 3.0 | 1.9 | 0.08 | 0.78 | 0.24 | 3.0/2.8 | 7.0 | 6.0 |
| PSW50_42 | 8.8 | 5.6 | 0.25 | 1.15 | 0.35 | 5.0/4.2 | 9.6 | 9.5 |
| PSW50_50 | 11.5 | 7.4 | 0.32 | 1.37 | 0.42 | 5.0/5.0 | 10.3 | 9.5 |
| PSW70_70 | 26.5 | 17.1 | 0.75 | 1.95 | 0.58 | 7.0/7.0 | 14.0 | 12.5 |
| PSW100_60 | 30.0 | 19.4 | 0.85 | 1.60 | 0.49 | 10.0/6.0 | 12.0 | 18.0 |
| PSW100_80 | 46.3 | 29.9 | 1.31 | 2.34 | 0.71 | 10.0/8.0 | 14.0 | 18.0 |
| PSW100_100 | 64.0 | 41.4 | 1.81 | 2.61 | 0.80 | 10.0/10.0 | 16.0 | 18.0 |

*Standard screen opening is 4700 microns (.185 in.). Screens also available in 2400 microns (.095 in.).

**This is the minimum flow that will receive treatment before bypass is allowed. These offline units are capable of unlimited bypass flow rates. CDS Engineers are readily available to provide hydraulic consultations on all applications.

***The headloss during a bypass event is a function of the velocity head. The typical coefficient of headloss "$K_{CDS}$" ranges from 1.3 to 2.5 $H_{CDS} = K_{CDS}\left(V^2/2_g\right) \Rightarrow \left[\frac{1.3}{2.5}\right] V^2/2_g$

# CAST IN PLACE MODELS

## PROCESSES FLOWS 150 TO 314 CFS

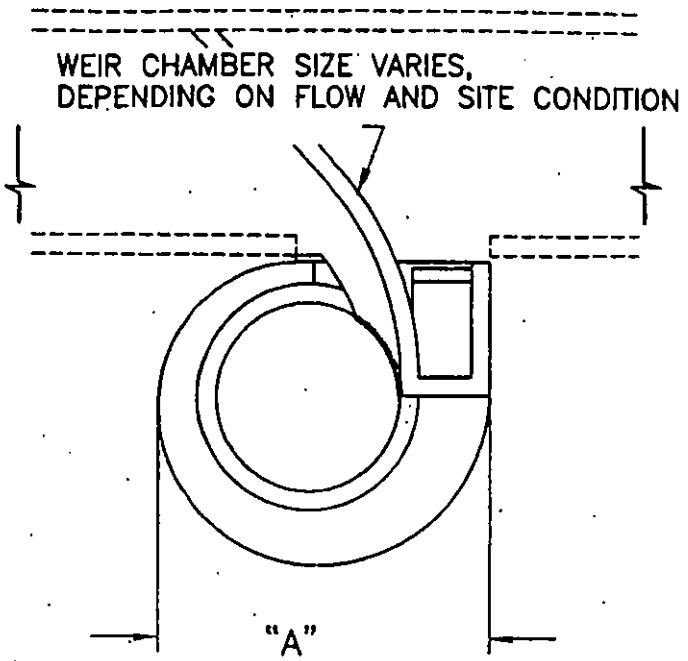


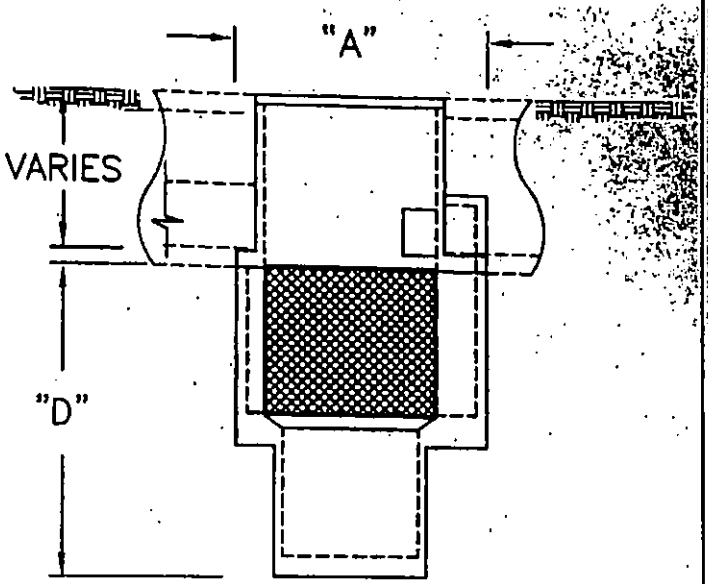


| CAST IN PLACE MODEL NUMBER | **TREATMENT DESIGN FLOW RATE | | | ***DESIGN HEAD LOSS @ DESIGN TREATMENT FLOW RATE | | SCREEN DIA./HT. | DEPTH BELOW PIPE INVERT "D" | FOOT PRINT DIAMETER "A" |
|---|---|---|---|---|---|---|---|---|
| | cfs | MGD | $m^3$/sec | ft. | m | ft. | ft. | ft. |
| CSW150_134 | 150 | 97 | 4.25 | 4.10 | 1.26 | 15/13.4 | 19.6 | 25.5 |
| CSW200_164 | 260 | 168 | 7.34 | 5.64 | 1.71 | 20/16.4 | 22.6 | 34.5 |
| CSW240_160 | 314 | 203 | 8.89 | 6.64 | 2.02 | 24/16.0 | 21.2 | 41.0 |

*Height of screen for Cast In Place unit may vary in height from 0.6 to 1.5 times the screen diameter to provide for a specific treatment design flow for a given drainage system.

*Standard screen opening is 4700 microns (.185 in.). Screens also available in 2400 microns (.095 in.).

**This is the minimum flow that will receive treatment before bypass is allowed. These offline units are capable of unlimited bypass flow rates. CDS Engineers are readily available to provide hydraulic consultations on all applications.

***The headloss during a bypass event is a function of the velocity head. The typical coefficient of headloss "K " ranges from 1.3 to 2.5 $H_{CDS} = K_{CDS}\left(V^2/2_g\right) \Rightarrow \left[\frac{1.3}{2.5}\right] V^2/2_g$

# APPROXIMATE CDS MAINTENANCE COSTS

| MODEL | $Q_{TREAT}$ (CFS) | AREA (ACRES) | SUMP VOLUME (CU YDS) | SUMP MATERIAL WT. (TONS) | DISPOSAL COSTS $40/TON | VACTOR TIME (HRS) | VACTOR CHARGE $175/HR | TOTAL COST |
|---|---|---|---|---|---|---|---|---|
| PMIU 20_15 | 0.7 | 4 | 1 | 1 | $35 | 4 | $700 | $735 |
| PMSU 20_15_4 | 0.7 | 4 | 1 | 1 | $35 | 4 | $700 | $735 |
| PMSU 20_15 | 0.7 | 4 | 1 | 1 | $50 | 4 | $700 | $750 |
| PMSU 20_20 | 1.1 | 6 | 1 | 1 | $50 | 4 | $700 | $750 |
| PMSU 20_25 | 1.6 | 8 | 1 | 1 | $50 | 4 | $700 | $750 |
| PMSU 30_20 | 2.0 | 10 | 2 | 2 | $100 | 4 | $700 | $800 |
| PMSU 30_30 | 3.0 | 20 | 2 | 2 | $100 | 4 | $700 | $800 |
| PSW 30_30 | 3.0 | 20 | 1 | 2 | $65 | 4 | $700 | $765 |
| PMSU 40_30 | 4.5 | 25 | 6 | 6 | $250 | 4 | $700 | $950 |
| PMSU 40_40 | 6.0 | 30 | 6 | 6 | $250 | 4 | $700 | $950 |
| PSWC 40_30 | 4.5 | 80 | 6 | 6 | $250 | 4 | $700 | $950 |
| PSWC 40_40 | 6.0 | 80 | 6 | 6 | $250 | 4 | $700 | $950 |
| PSW 50_42 | 9.0 | 50 | 2 | 2 | $85 | 4 | $700 | $785 |
| PSW 50_50 | 11 | 60 | 2 | 2 | $85 | 4 | $700 | $785 |
| PSWC 56_53 | 14 | 110 | 6 | 6 | $250 | 5 | $875 | $1,125 |
| PSWC 56_68 | 19 | 110 | 6 | 6 | $250 | 5 | $875 | $1,125 |
| PSW 70_70 | 26 | 150 | 4 | 4 | $180 | 6 | $1,050 | $1,230 |
| PSW 100_60 | 30 | 210 | 14 | 16 | $635 | 7 | $1,225 | $1,860 |
| PSW 100_80 | 50 | 280 | 14 | 16 | $635 | 7 | $1,225 | $1,860 |
| PSW 100_100 | 64 | 350 | 14 | 16 | $635 | 7 | $1,225 | $1,860 |

Assumptions:

1. Sump material weighs 85 lbs per cubic foot
2. Cleanout intervals are based on the amount and types of floatables and sediment captured by each CDS unit. CDS installations in Southern California typically require 1-2 cleanouts per year.
3. This estimate does not include hazardous waste disposal fees, if required.
4. Liquids may be decanted back into the CDS unit or discharged into the sanitay sewer without fees.
5. Minimum vactor charge of 4 hours applies. Actual maintenance time is less. Therefore, cleaning multiple CDS units in one day is recommended to reduce cost.

## APPROXIMATE CDS COSTS

| | MODEL | Q treatment (CFS) | AREA (ACRES) | EQUIPMENT COSTS* | INSTALLATION COSTS** | TOTAL |
|---|---|---|---|---|---|---|
| D≤12" | PM U 20_15 | 0.7 | 4 | $4,600 | $2,400 | $7,000 |
| D≤18" | PMSU 20_15_4 | 0.7 | 4 | $6,900 | $2,400 | $9,300 |
| | PMSU 20_15 | 0.7 | 4 | $8,200 | $3,400 | $11,600 |
| | PMSU 20_20 | 1.1 | 6 | $10,500 | $3,800 | $14,300 |
| | PMSU 20_25 | 1.6 | 9 | $14,700 | $3,800 | $18,500 |
| | PMSU 30_20 | 2.0 | 11 | $19,200 | $3,800 | $23,000 |
| | PMSU 30_30 | 3.0 | 17 | $24,500 | $4,500 | $29,000 |
| | PSW 30_30 | 3.0 | 17 | $19,700 | $9,300 | $29,000 |
| | PMSU 40_30 | 4.5 | 25 | $28,000 | $6,000 | $34,000 |
| | PMSU 40_40 | 6.0 | 33 | $32,700 | $7,000 | $39,700 |
| | PSWC 40_30 | 4.5 | 25 | $23,900 | $13,000 | $36,900 |
| | PSWC 40_40 | 6.0 | 33 | $28,000 | $13,000 | $41,000 |
| → | PSW 50_42 | 9.0 | 50 | $35,500 | $18,000 | $53,500 |
| | PSW 50_50 | 11 | 61 | $36,200 | $20,000 | $56,200 |
| | PSWC 56_53 | 14 | 78 | $42,000 | $26,000 | $68,000 |
| | PSWC 56_68 | 19 | 106 | $51,600 | $33,000 | $84,600 |
| | PSW 70_70 | 26 | 144 | $64,900 | $40,000 | $104,900 |
| | PSW 100_60 | 38 | 211 | $115,300 | $60,000 | $175,300 |
| | PSW 100_80 | 50 | 278 | $121,600 | $70,000 | $191,600 |
| | PSW 100_100 | 64 | 356 | $127,900 | $80,000 | $207,900 |

A = Q/CI (I = 0.2 IN/HR, C = 0.9) (Based on Regional Water Quality Control Board Requirements (SUSMP)).

* Equipment costs include delivery to jobsite (FOB). Prices are based on finished grade to invert depths of 5 ft. Prices are subject to change.

** Installation costs may vary depending on site conditions. Cost includes the cast-in-place weir box (if required).

# Diversion Box

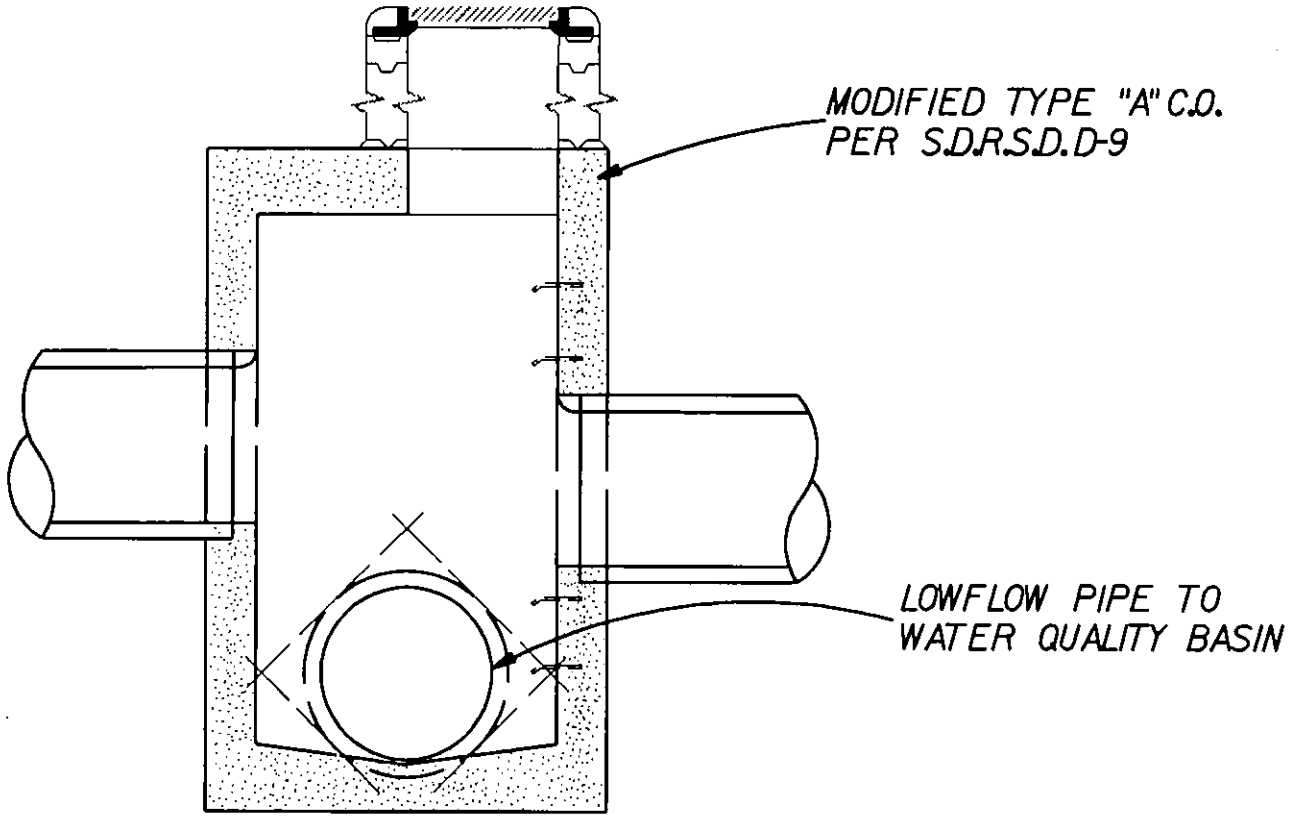


# DETAIL: DIVERSION BOX

NOT TO SCALE

# Enhanced Bio-Filtration

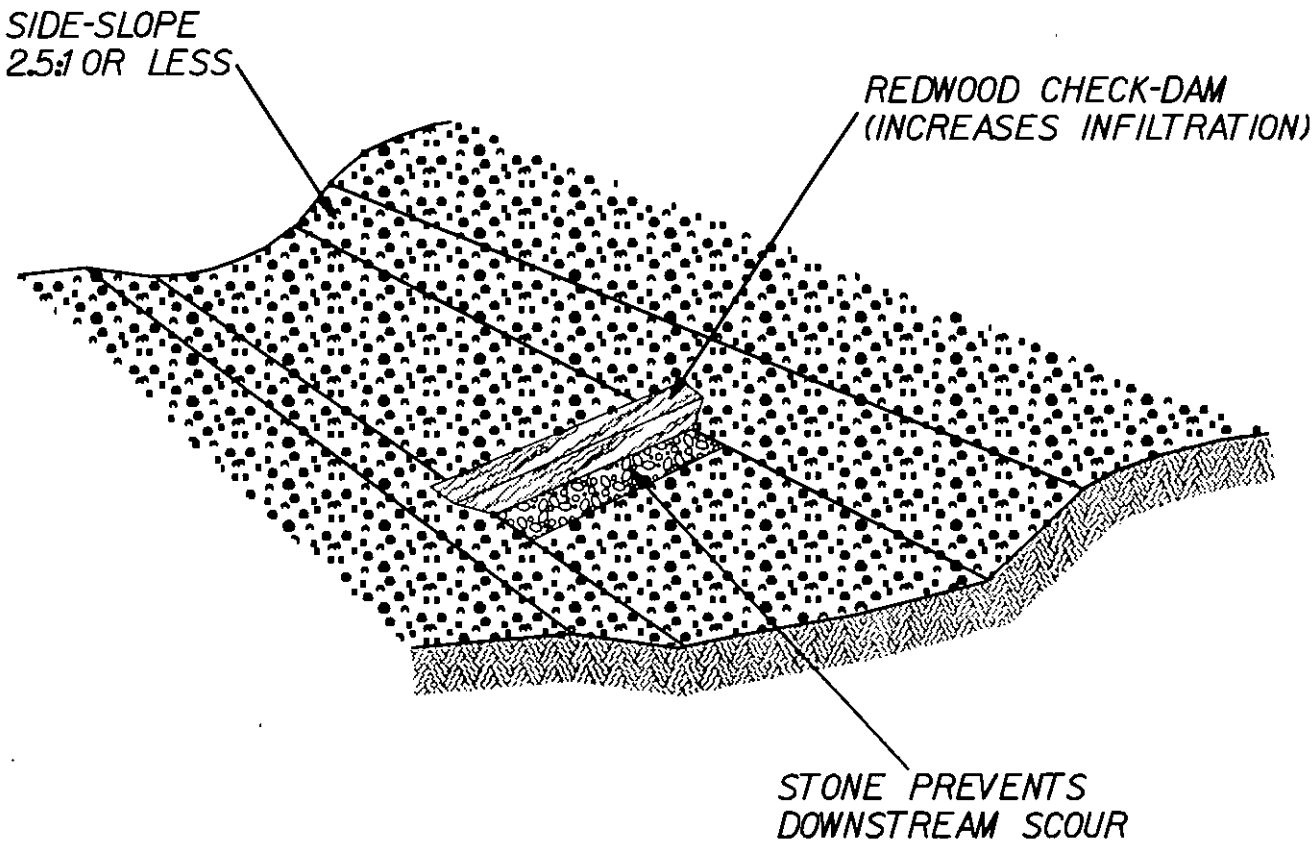


# DETAIL: ENHANACED BIO SWALE

NOT TO SCALE

# APPENDIX D

## 85th Percentile Precipitation Isopluvial Map

## Rainfall in Inches

**Harmony Grove Village**
10/5/2004
**85th Percentile Isopluvial Map Rainfall in Inches**
#14312B

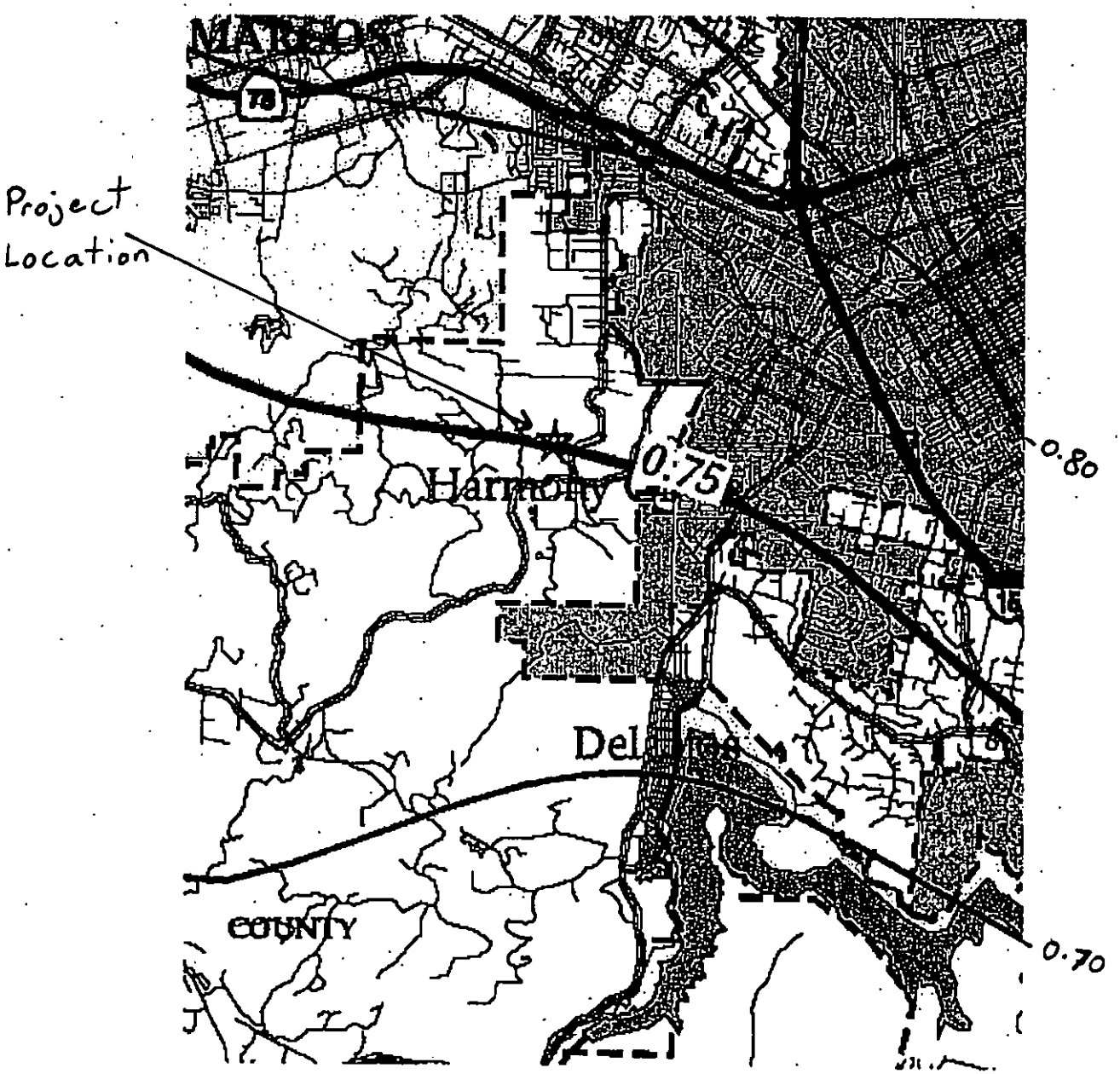

# APPENDIX E

## Estimated O & M Costs for BMP Project

Harmony Grove Village
J-14312b
March 21, 2006

Cost Estimate for Treatment Control BMPs for 2-Year Maintenance Security Deposit:

| BMP | Quantity | Unit Cost | Total Cost * | |
|---|---|---|---|---|
| BioSwales | 3 | $2,972.42 | $8,917.26 | |
| CDS Units | 15 | $5,537.61 | $83,064.15 | |
| Basins ** | 7 | $4,328.36 | $30,298.52 | |
| | | | $122,279.93 | x 2 years = $244,559.86 |

Notes:
* All BMP costs were obtained from Appendix H of the June 2003 County of San Diego *Standard Urban Storm Water Mitigation Plan for Land Development and Public Improvement Projects.*

** Basins include Water Quality (4) and Detention (2)

# APPENDIX H Estimated O & M Costs for BMP Project

Estimated vlaues derived from Caltrans Pilot BMP Study. This spreadsheet will change as additional data becomes available.

| | | | | | | Labor | | | Equipment | | | | Materials | | Total | Comments |
|---|---|---|---|---|---|---|---|---|---|---|---|---|---|---|---|---|
| | | | | | | Per. Hrs | Rate | Cost | Type | Days | rate | Cost | Item | Cost | Cost | |
| **BIOFILTER – STRIPS and SWALES** | | | | | | | | | | | | | | | | |
| Preventive Maintenance and Routine Inspections | | | | | | | | | | | | | | | | |
| ROUTINE ACTIONS | MAINTENANCE INDICATOR | FIELD MEASUREMENT | MEASUREMENT FREQUENCY | MAINTENANCE ACTIVITY | SITE-SPECIFIC REQUIREMENTS | | | | | | | | | | | |
| Height of vegetation | Average vegetation height exceeds 12 inches, emergence of trees, or woody vegetation | Visual inspection of vegetation throughout strip/swale | Once during wet season, once during dry season.(depending on growth) | Cut vegetation to an average height of 6 inches | Remove any trees, or woody vegetation. | 10 | 43.63 | 436.3 | one-ton truck & hydroseeder | 2 | 26.84 | 53.68 | string trimmer, rake, fork, bags, safety equipment | 50 | 539.98 | |
| Assess adequate vegetative cover | Less than 90 percent coverage in strip invert/swale or less than 70 percent on swale side slope | Visual inspection of strip/swale. Prepare a site schematic to record location and distribution of barren or browning spots to be restored. File the schematic for assessment of persistent problems. | Assess quantity needed in May each year late wet season and late dry season. | Reseed/revegetate barren spots by Nov. | | 8 | 43.63 | 349.04 | one-ton truck & hydroseeder | 1 | 48.15 | 48.15 | seed | 150 | 547.19 | |
| | | | | Scarify area to be restored, to a depth of 2-inches. Restore side slope coverage with hydroseed mixture. | | 0 | 43.63 | 0 | one-ton truck & hydroseeder | 0 | 26.84 | 0 | | | 0 | |
| | | | | If after 2 applications (2 seasons) of reseeding/revegetating and growth is unsuccessful both times, an erosion blanket or equivalent protection will be installed over eroding areas | | 0 | 43.63 | 0 | one-ton truck & hydroseeder | 0 | 26.84 | 0 | blanket | 0 | 0 | |
| Inspect for debris/accumulation | Debris or litter present | Visual observation | During routine trashing per Districts schedule. | Remove litter and debris. | None | 0 | 0 | 0 | one-ton truck & hydroseeder | 0 | 0 | 0 | | | 0 | |
| Inspect for accumulated sediment | Sediment at or near vegetation height, channeling of flow, inhibited flow due to change in slope. | Visual observation | Annually | Remove sediment. If flow is channeled, determine cause and take corrective action. If sediment becomes deep enough to change the flow gradient, remove sediment during dry season, characterize and properly dispose of sediment, and revegetate. | | 16 | 43.63 | 698.08 | one-ton truck & hydroseeder | 1 | 48.15 | 48.15 | seed, testing and disposal of sediment | 300 | 1046.23 | once every three years |

# APPENDIX H Estimated O & M Costs for BMP Project

Estimated vlaues derived from Caltrans Pilot BMP Study. This spreadsheet will change as additional data becomes available.

| | | | | | | Labor | | | Equipment | | | | Materials | | Total | Comments |
|---|---|---|---|---|---|---|---|---|---|---|---|---|---|---|---|---|
| | | | | | | Per. Hrs | Rate | Cost | Type | Days | rate | Cost | Item | Cost | Cost | |
| | | | | Notify engineer to determine if regrading is necessary. If necessary, regrade to design specification and revegetate swale/strip. If regrading is necessary, the process should start in May. Revegetate strip/swale in Nov. Target completion prior to wet season. | None | 2 | 43.63 | 87.26 | | | | 0 | | | 87.26 | |
| Inspect for burrows | Burrows, holes, mounds | Visual observation | Annually and after vegetation trimming. | Where burrows cause seepage, erosion and leakage, backfill firmly. | | 0 | 0 | 0 | one-ton truck & hydroseeder | 0 | 26.84 | 0 | | | 0 | |
| General Maintenance Inspection | Inlet structures, outlet structures, side slopes or other features damaged, significant erosion,emergence of trees, woody vegetation , fence damage, etc. | Visual observation | Semi-Annually, late wet season and late dry season. | Corrective action prior to wet season. Consult engineer if an immediate solution is not evident. | Remove any trees, or woody vegetation. | 16 | 43.63 | 698.08 | one-ton truck & hydroseeder | 2 | 26.84 | 53.68 | | | 751.76 | |
| TOTAL BIO FILTER AND SWALES | | | | | | 52 | | 2268.76 | | | | 203.66 | | 500 | 2972.42 | |
| BIO STRIP WITH SPREADER DITCH | | | | | Includes all the above plus the following: | | | 0 | | | | 0 | | | 0 | |
| Inspect for standing water | Water accumulation in spreader ditch | Standing water in spreader ditch | Within 72 hours after a storm event 0.75 inches or greater. | De-water the spreader ditch to a depth of less than 0.25 inches. If sediment impedes the de-watering activity, then move or remove that portion of the sediment. Characterize and properly dispose. | | 3 | 43.63 | 130.89 | 0 | 0 | 0 | 0 | | | 130.89 | |
| | | | | De-water the spreader ditch to a depth of less than 0.25" by removing the bypass plug and allowing the water to drain into the infiltration trench. Use care to prevent sediment from discharging into the infiltration trench. Replace the bypass plug once the de-watering has been completed. | | 6 | 43.63 | 261.78 | 0 | 0 | 0 | 0 | | | 261.78 | |

# APPENDIX H Estimated O & M Costs for BMP Project

| Estimated viaues derived from Caltrans Pilot BMP Study. This spreadsheet will change as additional data becomes available. | | | | | | Labor | | | Equipment | | | | Materials | | Total | Comments |
|---|---|---|---|---|---|---|---|---|---|---|---|---|---|---|---|---|
| | | | | | | Per. Hrs | Rate | Cost | Type | Days | rate | Cost | Item | Cost | Cost | |
| | | | | At the end of the wet season, remove the bypass plug and allow the spreader ditch to drain. Use care to prevent sediment from discharging into the infiltration trench. Remove, characterize, and dispose of sediment from the spreader ditch. Replace the bypass plug before the beginning of the wet season. | | 2 | 43.63 | 87.26 | sedan | 1 | 21.28 | 21.28 | testing & disposal costs | 200 | 308.54 | |
| TOTAL BIO STRIP WITH SPREADER DITCH | | | | | | 55 | | 2399.65 | | | | 203.60 | | 500 | 3103.31 | |
| CONTINUOUS DEFLECTIVE SEPARATION (CDS) UNITS | | | | | | | | | | | | | | | | |
| Preventive Maintenance and Routine Inspections | | | | | | | | | | | | | | | | |
| | | | | | | | | | | | | | | | | |
| DESIGN CRITERIA, | | | | | | | | | | | | | | | | |
| ROUTINE ACTIONS | MAINTENANCE INDICATOR | FIELD MEASUREMENT | MEASUREMENT FREQUENCY | MAINTENANCE ACTIVITY | SITE-SPECIFIC REQUIREMENTS | | | | | | | | | | | |
| Inspect sump for accumulation of material. | | | | | | | | | | | | | | | | |
| | or | | | | | | | 0 | | | | 0 | | | 0 | |
| | When the sump is 50% full during two consecutive monthly inspections. | | | | | | | 0 | | | | 0 | | | 0 | |
| | or | | | | | | | | | | | | | | | |
| | Annually in May, effect cleaning within 15 days | | | Empty unit | | 72 | 43.63 | 3141.36 | one-ton truck & vactor | 3 | 198.75 | 596.25 | testing & disposal costs | 1800 | 5537.61 | |
| | | | | | | | | 0 | | | | 0 | | | 0 | |
| Inspect weir box for accumulation of material. | Presence of trash and debris | Visual observation | Monthly during the wet season | Remove trash and debris while onsite conducting inspection. | | 0 | 0 | 0 | | 0 | 0 | 0 | | 0 | 0 | Hours accounted for during inspections |
| Inspect for standing water. ( Include with all of inspection) | Standing water in sump | Visual observation | Annually, 72 hours after target2 storm (0.75 in) | If standing water cannot be removed or remains through the wet season notify VCD. | None | | | | | | | | | | | |
| Inspect the screen for damage and to ensure that it is properly fastened. | Screen becomes clogged, damaged or loose | Visual observation | Annually before wet season. | Clean screen. | None | 0 | 0 | 0 | 0 | 0 | 0 | 0 | 0 | 0 | 0 | Hours accounted for during inspections |
| Inspection for structural integrity | Holes in screen, large debris, damage to housing or weir box | Visual observation | Annually or after a cleanout. | Immediately consult with engineer and manufacturer's representative to develop a course of action, effect repairs prior to the wet season. | None | | | 0 | | | | 0 | | | 0 | Hours accounted for during inspections |
| TOTAL CDS UNITS | | | | | | 72 | | 3141.36 | | | | 596.25 | | 1800 | 5537.61 | |
| DRAIN INLET INSERTS – FOSSIL FILTER | | | | | | | | | | | | | | | | |

# APPENDIX H Estimated O & M Costs for BMP Project

| Estimated viaues derived from Caltrans Pilot BMP Study. This spreadsheet will change as additional data becomes available. | | | | | | Labor | | | Equipment | | | | Materials | | Total | Comments |
|---|---|---|---|---|---|---|---|---|---|---|---|---|---|---|---|---|
| | | | | | | Per. Hrs | Rate | Cost | Type | Days | rate | Cost | Item | Cost | Cost | |
| Preventive Maintenance and Routine Inspections | | | | | | | | | | | | | | | | |
| DESIGN CRITERIA, | | | | | | | | | | | | | | | | |
| ROUTINE ACTIONS | MAINTENANCE INDICATOR | FIELD MEASUREMENT | MEASUREMENT FREQUENCY | MAINTENANCE ACTIVITY | SITE-SPECIFIC REQUIREMENTS | | | | | | | | | | | |
| Inspect for debris/trash | Sufficient debris/trash that could interfere with proper functioning of insert | Visual observation | During the wet season: | | | | 43.63 | 0 | | | | 0 | | | 0 | |
| □ Before and once during each target2 storm (0.25 in) event | | | | Remove and properly dispose of debris/trash. Target completion period while onsite conducting inspection. | | 18 | 43.63 | 785.34 | | | | 0 | | | 785.34 | |
| Oil and grease removal | Absorbent granules dark gray, or darker, or until clogged with sediment. | Visual observation | □ At the end of each target2 storm (0.25 in) event | Replace Fossil FilterTM adsorbent within 10 working days. Characterize and properly dispose spent media prior to wet season. | | 2 | 43.63 | 87.26 | | | | 0 | | | 87.26 | |
| Inspection for structural integrity | Broken or otherwise damaged insert | Visual observation | Twice per year in October and May. | Replace insert or immediately consult vendor to develop course of action, effect repairs within 10 working days | None | 2 | 43.63 | 87.26 | | | | 0 | | | 87.26 | |
| Annual renewal of medium | End of wet season, April 30 | None | Annually, in May | Remove, characterize, and properly dispose of media a Replace media before Oct 1 | None | 2 | 43.63 | 87.26 | sedan | 1 | 21.28 | 21.28 | new adsorbent and testing & disposal costs | 115 | 223.54 | |
| TOTAL DRAIN INLET INSERTS-FOSSIL FILTERS | | | | | | 24 | | 1047.12 | | | | 21.28 | | 115 | 1183.4 | |
| DRAIN INLET INSERTS – STREAM GUARD | | | | | | | | | | | | | | | | |
| Preventive Maintenance and Routine Inspections | | | | | | | | | | | | | | | | |
| DESIGN CRITERIA, | | | | | | | | | | | | | | | | |
| ROUTINE ACTIONS | MAINTENANCE INDICATOR | FIELD MEASUREMENT | MEASUREMENT FREQUENCY | MAINTENANCE ACTIVITY | SITE-SPECIFIC REQUIREMENTS | | | | | | | | | | | |
| Sediment removal | Sediment more than 6-inches | Visual inspection of sediment collected within insert | During the wet season: | Replace insert. Target completion while onsite conducting inspection. | | | | 0 | | | | 0 | | | 0 | |
| Inspect for debris/trash | Sufficient debris/trash that could interfere with proper functioning of insert | Visual observation | During the wet season | Remove and dispose of debris/trash. Target completion period while onsite conducting inspection. | | | | 0 | | | | 0 | | | 0 | |
| Oil and grease removal | When oil absorbent polymer becomes saturated with oil | Visual observation (absorbent polymer expansion indicates oil saturation) | Monthly | Within 10 working days, replace oil absorbent polymer | | 2 | 43.63 | 87.26 | | | | 0 | | | 87.26 | |
| Inspection for structural integrity | Signs of rips, gashes, and/or fallen media | Visual observation | Twice per year in October and May. | Replace insert or immediately consult vendor to develop a course of action, effect repairs within 10 working days | None | 2 | 43.63 | 87.26 | | | | 0 | | | 87.26 | |

# APPENDIX H Estimated O & M Costs for BMP Project

Estimated vlaues derived from Caltrans Pilot BMP Study. This spreadsheet will change as additional data becomes available.

| | | | | | | Labor | | | Equipment | | | | Materials | | Total | Comments |
|---|---|---|---|---|---|---|---|---|---|---|---|---|---|---|---|---|
| | | | | | | Per. Hrs | Rate | Cost | Type | Days | rate | Cost | Item | Cost | Cost | |
| Annual renewal of medium | End of wet season, April 30 | None | Annually, in May | Remove characterize, re and properly dispose of media. Replace media before Oct 1. | None | 2 | 43.63 | 87.26 | sedan | 1 | 21.28 | 21.28 | new adsorbent and testing & disposal costs | 195 | 303.54 | |
| **TOTAL DRAIN INLET INSERTS-STREAM GUARDS** | | | | | | 6 | | 261.78 | | | | 21.28 | | 195 | 478.06 | |
| **EXTENDED DETENTION BASINS** | | | | | | | | | | | | | | | | |
| Preventive Maintenance and Routine Inspections | | | | | | | | | | | | | | | | |
| | | | | | | | | | | | | | | | | |
| DESIGN CRITERIA, | | | | | | | | | | | | | | | | |
| ROUTINE ACTIONS | MAINTENANCE INDICATOR | FIELD MEASUREMENT | MEASUREMENT FREQUENCY | MAINTENANCE ACTIVITY | SITE-SPECIFIC REQUIREMENTS | | | | | | | | | | | |
| Basin side slope planted for erosion protection and planted invert | Average vegetation height greater than 12-inches, emergence of trees or woody vegetation, | Visual observation and random measurements through out the side slope area | Once during wet season, once during dry season. | Cut vegetation to an average height of 6-inches and remove trimmings. Remove any trees, or woody vegetation. | | 48 | 43.63 | 2094.24 | one-ton truck | 2 | 26.84 | 53.68 | string trimmer, rake, fork, bags, safety equipment | 50 | 2197.92 | |
| Slope stability | Evidence of erosion | Visual observation | October each year | Reseed/revegetate barren spots prior to wet season. | | 0 | 43.63 | 0 | one-ton truck & hydroseeder | 0 | 48.15 | 0 | seed | 150 | 150 | |
| | | | | Contact environmental or landscape architect for appropriate seed mix. | | | | | | | | | | | | |
| | | | | Scarify surface if needed. | | | | | | | | | | | | |
| | | | | If after two applications (2 seasons) of reseeding/revegetating and growth is unsuccessful both times, an erosion blanket or equivalent protection will be installed over eroding areas. No erosion blanket will be installed in the basin invert. | NOT AN ANNUAL COST! | 0 | 43.63 | 0 | one-ton truck | 0 | 26.84 | 0 | blanket | 0 | 0 | |
| Inspect for standing water. | Standing water for more than 72 hours | Visual observation | Annually, 72 hours after a target2 storm (0.75 in) event | ☐ Drain facility | None | | | | | | | | | | | |
| | | | | ☐ Check and unclog clogged orifice. | Should be Annual Mtce. | | | | | | | | | | | |
| | | | | Notify engineer, if immediate solution is not evident. | | | | | | | | | | | | |
| Inspection for trash and debris | Debris/trash present | Visual observation | During routine trashing, per Districts schedule. | Remove and dispose of trash and debris | None | | | | | | | | | | | |
| Inspection for sediment management and characterization of sediment for removal | ☐ Sediment depth exceeds marker on staff gage | ☐ Measure depth at apparent maximum and minimum accumulation of sediment. Calculate average depth | Annually | Remove and properly dispose of sediment. Regrade if necessary. | | 16 | 43.63 | 698.08 | 4-yd dump truck, backhoe & trailer, one-ton truck & hydroseeder & dan | 0.4 | 176.5 | 70.6 | testing and disposal | 460 | 1228.68 | once every 5 years |

# APPENDIX H Estimated O & M Costs for BMP Project

Estimated vlaues derived from Caltrans Pilot BMP Study. This spreadsheet will change as additional data becomes available.

| | | | | | | Labor | | | Equipment | | | | Materials | | Total | Comments |
|---|---|---|---|---|---|---|---|---|---|---|---|---|---|---|---|---|
| | | | | | | Per. Hrs | Rate | Cost | Type | Days | rate | Cost | Item | Cost | Cost | |
| Inspect for burrows | Burrows, holes, mounds | Visual observation | Annually and after vegetation trimming. | □ Where burrows cause seepage, erosion and leakage, backfill firmly. | | | | | | | | | | | | |
| General Maintenance Inspection | Inlet structures, outlet structures, side slopes or other features damaged, significant erosion, emergence of trees or woody vegetation, graffiti or vandalism, fence damage, etc. | Visual observation | Semi-Annually, late wet season and late dry season Monthly | Corrective action prior to wet season. Consult engineers if immediate solution is not evident. | None | 16 | 43.63 | 698.08 | one-ton truck | 2 | 26.84 | 53.68 | | | 751.76 | |
| TOTAL EXTENDED BASIN | | | | | | 80 | | 3490.4 | | | | 177.96 | | 660 | 4328.36 | |
| INFILTRATION BASINS | | | | | | | | | | | | | | | | |
| Preventive Maintenance and Routine Inspections | | | | | | | | | | | | | | | | |
| DESIGN CRITERIA, | | | | | | | | | | | | | | | | |
| ROUTINE ACTIONS | MAINTENANCE INDICATOR | FIELD MEASUREMENT | MEASUREMENT FREQUENCY | MAINTENANCE ACTIVITY | SITE-SPECIFIC REQUIREMENTS | | | | | | | | | | | |
| Vegetation of basin invert and side slopes | Vegetation height exceeds 12 inches, emergence of trees or woody vegetation, | Visual observation and random measurements through out the side slope and invert area | Once during wet season, once during dry season. | Cut vegetation to an average height of 6-inches. Remove any trees, or woody vegetation. | None | 48 | 43.63 | 2094.24 | two-ton truck | 2 | 50 | 100 | string trimmer, rake, fork, bags, safety equipment | 50 | 2244.24 | |
| Inspect for standing water. | Standing water for more than 72 hours | Visual observation | Annually, 72 hours after a target2 storm (0.75 in) event. | □ Drain facility, if possible. | | 16 | 43.63 | 698.08 | one-ton truck | 4 | 26.84 | 107.36 | | | 805.44 | |
| | | | | □ Notify engineer to consider: | | | | | | | | | | | | |
| | | | | □ Remove sediment, scarify invert, and regrade if necessary. | | | | 0 | | | | 0 | | | 0 | covered under sediment removal |
| | | | | □ If unable to achieve acceptable infiltration rate or implement alternative solution then move to decommission | | | | 0 | | | | 0 | | | 0 | |
| | | | | □ If standing water can not be removed then notify VCD. | None | | | | | | | | | | | |
| Inspection for trash and debris at inlet structures | Debris/trash present | Visual observation | During routine trashing, per Districts schedule. | Remove and dispose of trash and debris | None | | | | | | | | | | | |
| Inspection for sediment accumulation | Sediment depth exceeds marker on staff gage. | Measure depth at apparent maximum and minimum accumulation of sediment. Calculate average depth | Annually | Remove, characterize and properly dispose of sediment. Regrade and revegetate bare areas. | None | 4 | 43.63 | 174.52 | 4-yd dump truck, loader & trailer, grader, sedan, one-ton truck & hydroseeder | 0.5 | 256.94 | 128.47 | seed, testing & disposal | 150 | 452.99 | once every 10 years |
| Slope stability | Evidence of erosion. | Visual observation | October each year. | Reseed/revegetate barren spots by Nov. Scarify surface if needed. | | 20 | 43.63 | 872.6 | one-ton truck & hydroseeder | 1 | 48.15 | 48.15 | seed | 275 | 1195.75 | |

# APPENDIX H Estimated O & M Costs for BMP Project

Estimated viaues derived from Caltrans Pilot BMP Study. This spreadsheet will change as additional data becomes available.

| | | | | | | Labor | | | Equipment | | | | Materials | | Total | Comments |
|---|---|---|---|---|---|---|---|---|---|---|---|---|---|---|---|---|
| | | | | | | Per. Hrs | Rate | Cost | Type | Days | rate | Cost | Item | Cost | Cost | |
| | | | | If after two applications (2 seasons) of reseeding/revegetating and growth is unsuccessful both times, an erosion blanket or equivalent protection will be installed over eroding areas. No erosion blanket will be installed in the basin invert. | | 0 | 43.63 | 0 | one-ton truck | 0 | 26.84 | 0 | blanket | 60 | 60 | |
| | | | | Contacet environmental or landscape architect for appropriate seed mix. | None | 0 | 43.63 | 0 | | | | 0 | | | 0 | |
| Inspect for burrows | Burrows, holes, mounds. | Visual observation | Annually and after vegetation trimming. | ☐ Where burrows cause seepage, erosion and leakage, backfill firmly. | None | 0 | 43.63 | 0 | one-ton truck | 0 | 26.84 | 0 | | | 0 | |
| General Maintenance Inspection | Inlet structures, outlet structures, side slopes or other features damaged, significant erosion, emergence of trees or woody vegetation, graffiti or vandalism, fence damage, etc. | Visual observation | Semi-Annually, late wet season and late dry season | Take corrective action prior to wet season. Consult engineer if immediate solution is not evident. | None | 20 | 43.63 | 872.6 | two-ton truck | 1 | 50 | 50 | | | 922.6 | |
| TOTAL INFILTRATION BASIN | | | | | | 108 | | 4712.04 | | | | 433.96 | | 535 | 5661.02 | |
| INFILTRATION TRENCHES | | | | | | | | | | | | | | | | |
| Preventive Maintenance and Routine Inspections | | | | | | | | | | | | | | | | |
| | | | | | | | | | | | | | | | | |
| DESIGN CRITERIA, | | | | | | | | | | | | | | | | |
| ROUTINE ACTIONS | MAINTENANCE INDICATOR | FIELD MEASUREMENT | MEASUREMENT FREQUENCY | MAINTENANCE ACTIVITY | SITE-SPECIFIC REQUIREMENTS | | | | | | | | | | | |
| Inspect for standing water | Standing surface water for more than 72 hours | Visual observation | Annually, 72 hours after a target2 storm (0.75 in) event | ☐ Drain facility | | 16 | 43.63 | 698.08 | one-ton truck | 2 | 26.84 | 53.68 | | | 751.76 | |
| | | | | ☐ Notify engineer to consider. | | 0 | 43.63 | 0 | | | | 0 | | | 0 | |
| | | | | ☐ Undertake investigation for course of action to achieve acceptable infiltration rate. If unable to achieve acceptable infiltration then BMP operations cease. | | | | 0 | | | | 0 | | | 0 | |
| | | | | ☐ If standing water can not be removed, notify VCD. | None | | | 0 | | | | 0 | | | 0 | Does not include Vector Control Agency costs |
| Inspect for trash and debris at inlet and outlet structures | Trash/debris present | Visual observation | During routine trashing per Districts schedule. | Remove and dispose of trash and debris. | None | 0 | 43.63 | 0 | | | | 0 | | 0 | 0 | |

# APPENDIX H Estimated O & M Costs for BMP Project

Estimated vlaues derived from Caltrans Pilot BMP Study. This spreadsheet will change as additional data becomes available.

| | | | | | | Labor | | | Equipment | | | | Materials | | Total | Comments |
|---|---|---|---|---|---|---|---|---|---|---|---|---|---|---|---|---|
| | | | | | | Per. Hrs | Rate | Cost | Type | Days | rate | Cost | Item | Cost | Cost | |
| Inspect for sediment accumulation | Visible sediment | Visual inspection of the stone aggregate, no sediment should be visible at the top of the trench due to sediment buildup from filter fabric. | Annually. | Remove top layer of trench, silt, filter fabric and stone, wash stone and reinstall fabric and stone into trench prior to wet season. | None | 8 | 43.63 | 349.04 | gradeall shovel, 10-yd dump trucks | 0.066 | 6000 | 396 | replacement stone and filter fabric | 1200 | 1945.04 | once every 15 years |
| General Maintenance Inspection | Inlet structures, outlet structures, filter fabric or other features damaged, emergence of trees or woody vegetation, graffiti or vandalism, fence damage, etc. | Visual observation | Semi-Annually, late wet season and late dry seasonMonthly | Take corrective action, prior to wet season. Consult engineer if immediate solution is not evident. | None Remove any trees, or woody vegetation. | 8 | 43.63 | 349.04 | one-ton truck | 2 | 26.84 | 53.68 | | | 402.72 | |
| TOTAL INFILTRATION TRENCHES | | | | | | 32 | | 1396.16 | | | | 503.36 | | 1200 | 3099.52 | |
| MEDIA FILTERS – PERLITE/ZEOLITE | | | | | | | | | | | | | | | | |
| Preventive Maintenance and Routine Inspections | | | | | | | | | | | | | | | | |
| | | | | | | | | | | | | | | | | |
| DESIGN CRITERIA, | | | | | | | | | | | | | | | | |
| ROUTINE ACTIONS | MAINTENANCE INDICATOR | FIELD MEASUREMENT | MEASUREMENT FREQUENCY | MAINTENANCE ACTIVITY | SITE-SPECIFIC REQUIREMENTS | | | | | | | | | | | |
| [illegible] | [illegible] | [illegible] | [illegible] | [illegible] | [illegible] | 0 | 43.63 | 0 | one-ton truck | 0 | 26.84 | 0 | [illegible] | | 0 | |
| Inspect for sediment accumulation in pre-treatment sedimentation chamber | Sediment occupies 10% of the filter chamber volume. | Measure with appropriate device | Annually in May. | | | 4 | 43.63 | 174.52 | one-ton truck | 1 | 26.84 | 26.84 | | | 201.36 | |
| | | | | Remove sediment prior to wet season. Characterize sediment and properly dispose | None | 8 | 43.63 | 349.04 | sedan | 1 | 21.28 | 21.28 | testing & disposal costs | 600 | 970.32 | |
| | | | | | | | | 0 | | | | 0 | | | 0 | |
| Inspect for minor maintenance | Per manufacture's guidelines | None | Annually | Clean per manufacturer's guidelines. Prior to wet season. | None. | 4 | 43.63 | 174.52 | one-ton truck | 1 | 26.84 | 26.84 | | | 201.36 | |
| Manufacturer's recommended major maintenance | Per manufacture's guidelines | Per manufacture's guidelines | Annually | Consult with manufacturer regarding need for replacement of canisters. If manufacturer confirms need, replace canisters. Prior to wet season. When canisters are changed send canisters to manufacturer to determine remaining life of the media | None | 8 | 43.63 | 349.04 | one-ton truck | 1 | 26.84 | 26.84 | major maintenance | 5000 | 5375.88 | By Contract and oversite |
| Inspection for trash and debris at inlet and outlet structures and within vaults | Trash/debris present | Visual observation | During routine trashing, per Districts schedule. | Remove and dispose of trash and debris when on site conducting inspections. | None | 0 | 43.63 | 0 | | | | 0 | | | 0 | |
| Inspect for standing water | Water accumulation in any structure or other location within the filter | Standing water in any structure or other location within the filter | Annually, at end of wet season. | Gravity drain where possible. | | 0 | 43.63 | 0 | one-ton truck | 1 | 0 | 0 | | | 0 | |

# APPENDIX H Estimated O & M Costs for BMP Project

Estimated vlaues derived from Caltrans Pilot BMP Study. This spreadsheet will change as additional data becomes available.

| | | | | | | Labor | | | Equipment | | | | Materials | | Total | Comments |
|---|---|---|---|---|---|---|---|---|---|---|---|---|---|---|---|---|
| | | | | | | Per. Hrs | Rate | Cost | Type | Days | rate | Cost | Item | Cost | Cost | |
| | | | | □ If standing water can not be removed or remains through wet season notify VCD. | None | | | 0 | | | | 0 | | | 0 | Does not include Vector Control Agency costs |
| General Maintenance Inspection | Inlet structures, outlet structures, vault, piping, or other features damaged and for graffiti or vandalism | Visual observation | Semi-Annually, late wet season and late dry .. season Monthly | Take corrective action prior to wet season. Consult engineer if immediate solution is not evident. | None | 8 | 43.63 | 349.04 | one-ton truck | 2 | 26.84 | 53.68 | | | 402.72 | |
| **TOTALMEDIA FILTERS – PERLITE/ZEOLITE** | | | | | | 32 | | 1396.16 | | | | 155.48 | | 5600 | 7151.64 | |
| **MEDIA FILTERS – SAND W/PUMP** | | | | | | | | | | | | | | | | |
| Preventive Maintenance and Routine Inspections | | | | | | | | | | | | | | | | |
| | | | | | | | | | | | | | | | | |
| DESIGN CRITERIA. | | | | | | | | | | | | | | | | |
| ROUTINE ACTIONS | MAINTENANCE INDICATOR | FIELD MEASUREMENT | MEASUREMENT FREQUENCY | MAINTENANCE ACTIVITY | SITE-SPECIFIC REQUIREMENTS | | | | | | | | | | | |
| | | | | | | | | | | | | | | | | |
| | | | | | | | | | | | | | | | | |
| Drain time of 48 hours | Drain time exceeds 72 hours | Determine drain time by visual observation | Annually, after one target2 storm (0.75 in) event during wet season | □ Remove sediment, trash and debris. | | 4 | 43.63 | 174.52 | one-ton truck | 1 | 26.84 | 26.84 | | | 201.36 | |
| | | | | □ Check orifice | | | | 0 | | | | 0 | | | 0 | |
| | | | | □ Notify engineer to consider removing top 2 inches of media and dispose of sediment. Restore media depth to 18 inches when overall media depth drops to 12 inches. Complete prior to wet season. | Escondido MS Dataware SF – Remove and restore media depth to 12 inches. | 12 | 43.63 | 523.56 | boom truck | 0.5 | 74.94 | 37.47 | drums, shovel, rake, drum grappler, confined space equipment characterization and disposal | 1250 | 1811.03 | every 2 years |
| Inspect for sediment accumulation in sedimentation chamber | Sediment depth exceeds marker on staff gage. | Measure with appropriate device | Measure sediment depth annually. | Remove sediment prior to wet season. Characterize sediment and properly dispose. | | 12 | 43.63 | 523.56 | boom truck | 0.5 | 74.94 | 37.47 | drums, shovel, rake, drum grappler, confined space equipment characterization and disposal | 1250 | 1811.03 | every 2 years |
| Inspection for trash / debris | Trash and debris present | Visual observation | During routine trashing, per Districts schedule. | Remove and dispose of trash and debris during routine trashing | None | 0 | 43.63 | 0 | one-ton truck | 0 | 26.84 | 0 | confined space equipment | 0 | 0 | |
| Inspect pumps for proper functioning | Pump does not operate | Energize pump to see if water is discharged. | After every storm. | Make assessment to determine if problem is electrical or mechanical. Take appropriate action. Replace pump if needed. | District 7 filters only | 0 | 43.63 | 0 | one-ton truck | 0 | 26.84 | 0 | confined space equipment | 0 | 0 | |

# APPENDIX H Estimated O & M Costs for BMP Project

| Estimated vlaues derived from Caltrans Pilot BMP Study. This spreadsheet will change as additional data becomes available. | | | | | | Labor | | | Equipment | | | | Materials | | Total | Comments |
|---|---|---|---|---|---|---|---|---|---|---|---|---|---|---|---|---|
| | | | | | | Per. Hrs | Rate | Cost | Type | Days | rate | Cost | Item | Cost | Cost | |
| Inspect pumps for serviceability and periodic maintenance | Per manufacture's guidelines | Per manufacture's guidelines | Per manufacture's guidelines | Per manufacture's guidelines | District 7 filters only | 0 | 55.7 | 0 | one-ton truck | 0 | 26.84 | 0 | pump or parts, confined space equipment | 0 | 0 | |
| Inspect for burrows | Burrows, holes, mounds. | Visual observation | Annual inspections after vegetation trimming. | □ Where burrows cause seepage, erosion and leakage, backfill firmly. | None | | | 0 | | | | 0 | | | 0 | |
| Inspect for standing water | Water accumulation in any structure or other location within the filter | Standing water in any structure or other location within the filter | Annually, 72 hours after a target2 storm (0.75 in) | □ Gravity drain where possible. | | 4 | 43.63 | 174.52 | one-ton truck | 1 | 26.84 | 26.84 | | | 201.36 | |
| | | | | □ Notify engineer, if immediate solution is not evident. | | 2 | 43.63 | 87.26 | | | | 0 | | | 87.26 | |
| | | | | □ If standing water can not be removed or remains through wet season notify VCD. | None | 2 | 43.63 | 87.26 | | | | 0 | | | 87.26 | Does not include Vector Control Agency costs |
| General Maintenance Inspection | Inlet structures, outlet structures, filter fabric or other features damaged, emergence of vegetation, graffiti or vandalism, fence damage, etc. | Visual observation | Semi-Annually, late wet season and late dry season Monthly | Within 30 working days, take corrective action. Consult engineer if immediate solution is not evident. | None | 8 | 43.63 | 349.04 | one-ton truck | 2 | 26.84 | 53.68 | | | 402.72 | |
| **TOTAL MRDIA FILTER-SAND W/PUMP** | | | | | | 44 | | 1919.72 | | | | 182.3 | | 2500 | 4602.02 | |
| **MEDIA FILTERS – SAND WO/PUMP** | | | | | | | | | | | | | | | | |
| Preventive Maintenance and Routine Inspections | | | | | | | | | | | | | | | | |
| | | | | | | | | | | | | | | | | |
| DESIGN CRITERIA, | | | | | | | | | | | | | | | | |
| ROUTINE ACTIONS | MAINTENANCE INDICATOR | FIELD MEASUREMENT | MEASUREMENT FREQUENCY | MAINTENANCE ACTIVITY | SITE-SPECIFIC REQUIREMENTS | | | | | | | | | | | |
| | | | | | | | | | | | | | | | | |
| | | | | | | | | | | | | | | | | |
| Drain time of 48 hours | Drain time exceeds 72 hours | Determine drain time by visual observation | Annually, after one target2 storm (0.75 in) event during wet season | □ Remove sediment, trash and debris. | | 4 | 43.63 | 174.52 | one-ton truck | 1 | 26.84 | 26.84 | | | 201.36 | |
| | | | | □ Check orifice | | | | 0 | | | | 0 | | | 0 | |
| | | | | □ Notify engineer to consider removing top 2 inches of media and dispose of sediment. Restore media depth to 18 inches when overall media depth drops to 12 inches. Complete prior to wet season. | Escondido MS Delaware SF – Remove and restore media depth to 12 inches. | 8 | 43.63 | 349.04 | boom truck | 0.33 | 74.94 | 24.7302 | drums, shovel, rake, drum grappler, confined space equipment characterization and disposal | 833 | 1206.77 | every 3 years |

# APPENDIX H Estimated O & M Costs for BMP Project

| Estimated vlaues derived from Caltrans Pilot BMP Study. This spreadsheet will change as additional data becomes available. | | | | | | Labor | | | Equipment | | | | Materials | | Total | Comments |
|---|---|---|---|---|---|---|---|---|---|---|---|---|---|---|---|---|
| | | | | | | Per. Hrs | Rate | Cost | Type | Days | rate | Cost | Item | Cost | Cost | |
| Inspect for sediment accumulation in sedimentation chamber | Sediment depth exceeds marker on staff gage. | Measure with appropriate device | Measure sediment depth annually. | Remove sediment prior to wet season. Characterize sediment and properly dispose. | | 8 | 43.63 | 349.04 | boom truck | 0.33 | 74.94 | 24.7302 | drums, shovel, rake, drum grappler, confined space equipment characterization and disposal | 833 | 1206.77 | every 3 years |
| Inspection for trash / debris | Trash and debris present | Visual observation | During routine trashing, per Districts schedule. | Remove and dispose of trash and debris during routine trashing. | None | 24 | 43.63 | 1047.12 | one-ton truck | 2 | 26.84 | 53.68 | confined space equipment | 50 | 1150.8 | |
| Inspect for burrows | Burrows, holes, mounds. | Visual observation | Annual inspections after vegetation trimming. | □ Where burrows cause seepage, erosion and leakage, backfill firmly. | None | | | 0 | | | | 0 | | | 0 | |
| Inspect for standing water | Water accumulation in any structure or other location within the filter | Standing water in any structure or other location within the filter | Annually, 72 hours after a target2 storm (0.75 in) | □ Gravity drain where possible. | | 4 | 43.63 | 174.52 | one-ton truck | 1 | 26.84 | 26.84 | | | 201.36 | |
| | | | | □ Notify engineer, if immediate solution is not evident. | | 2 | 43.63 | 87.26 | | | | 0 | | | 87.26 | |
| | | | | □ If standing water can not be removed or remains through wet season notify VCD. | None | 2 | 43.63 | 87.26 | | | | 0 | | | 87.26 | Does not include Vector Control Agency costs |
| General Maintenance Inspection | Inlet structures, outlet structures, filter fabric or other features damaged, emergence of vegetation, graffiti or vandalism, fence damage, etc. | Visual observation | Semi-Annually, late wet season and late dry season Monthly | Within 30 working days, take corrective action. Consult engineer if immediate solution is not evident. | None | 8 | 43.63 | 349.04 | one-ton truck | 2 | 26.84 | 53.68 | | | 402.72 | |
| TOTAL MRDIA FILTER-SAND WO/PUMP | | | | | | 60 | | 2617.8 | | | | 210.5 | | 1716 | 4544.3 | |
| MULTI-CHAMBER TREATMENT TRAINS | | | | | | | | | | | | | | | | |
| Preventive Maintenance and Routine Inspections | | | | | | | | | | | | | | | | |
| | | | | | | | | | | | | | | | | |
| DESIGN CRITERIA, | | | | | | | | | | | | | | | | |
| ROUTINE ACTIONS | MAINTENANCE INDICATOR | FIELD MEASUREMENT | MEASUREMENT FREQUENCY | MAINTENANCE ACTIVITY | SITE-SPECIFIC REQUIREMENTS | | | | | | | | | | | |
| Maximum filter drain time of 72 hrs for design and smaller storms | Drain time greater than 72 hours or sediment accumulation is greater than 0.1 inch over more than 50 percent of the fabric surface area. | Visual observation | After one target2 storm (0.75 in) event during wet season. | □ Remove and replace filter fabric blanket. | | 4 | 43.63 | 174.52 | one-ton truck | 1 | 26.84 | 26.84 | | | 201.36 | |
| | | | | □ If problem persists, consult with engineer, the media may need to be replaced. Complete prior to wet season. | None | 2 | 43.63 | 87.26 | | 0 | 0 | 0 | | 0 | 87.26 | |

# APPENDIX H Estimated O & M Costs for BMP Project

Estimated vlaues derived from Caltrans Pilot BMP Study. This spreadsheet will change as additional data becomes available.

| | | | | | | Labor | | | Equipment | | | | Materials | | Total | Comments |
|---|---|---|---|---|---|---|---|---|---|---|---|---|---|---|---|---|
| | | | | | | Per. Hrs | Rate | Cost | Type | Days | rate | Cost | Item | Cost | Cost | |
| Inspection for trash/ debris at inlet and outlet structures and the MCTT | Trash and debris present | Visual observation | During routine trashing per District schedule | Remove and dispose of trash and debris During routine trashings. | None | 0 | 43.63 | 0 | one-ton truck | 0 | 26.84 | 0 | confined space equipment | 50 | 50 | |
| Inspection for sediment accumulation | Sediment accumulates 50% of the volume underneath the tube settlers. Maximum of 2-feet grit chamber | Measure with appropriate device | Remove tube settler, measure sediment depth annually | Remove sediment prior to wet season. Characterize sediment and properly dispose. | None | 36 | 43.63 | 1570.68 | one-ton truck | 1 | 26.84 | 26.84 | drums, shovel, rake, drum grappler, confined space equipment, characterization and disposal | 600 | 2197.52 | |
| | | | | □ If standing water can not be removed or remains through the wet season notify VCD. | None | 2 | 43.63 | 87.26 | | | | 0 | | | 87.26 | Does not include Vector Control Agency costs |
| Replace filter media every 3 years per designer's specification | Operation greater than 3 years | Not applicable | Every 3 years | Remove and replace filter media. Characterize and properly dispose. | None | 8 | 43.63 | 349.04 | vactor and one-ton truck | 0.33 | 198.75 | 65.5875 | confined space equipment, characterization and disposal | 1200 | 1614.628 | every three yea |
| Inspect sorbent pillows in main settling chamber | Darkened by oily material | Visual Observation | Annually, in May. | Annually, renew sorbent pillows, or immediately if pillows are darkened by oily material, characterize and properly dispose. | None | 4 | 43.63 | 174.52 | one-ton truck | 1 | 26.84 | 26.84 | sorbent pillow | 100 | 301.36 | |
| Inspect pumps for proper functioning | Pump does not operate | Energize pump to see if water is discharged | After every storm | Make assessment to determine if problem is electrical or mechanical. Take appropriate action. Replace pump if needed. | None | 0 | 43.63 | 0 | one-ton truck | 0 | 26.84 | 0 | confined space equipment | 0 | 0 | |
| Inspect pumps for serviceability and periodic maintenance | Per manufacture's guidelines | Per manufacture's guidelines | Per manufacture's guidelines | Per manufacture's guidelines | None | 0 | 55.7 | 0 | one-ton truck | 0 | 26.84 | 0 | confined space equipment, pump or parts | 0 | 0 | |
| General Maintenance Inspection | Inlet structures, outlet structures, filter fabric, settling tubes or other features damaged, emergence of vegetation, graffiti or vandalism, fence damage, etc. | Visual observation | Semi-Annually, late wet season and late dry season | Within 30 working days, take corrective action. Consult engineer if immediate solution is not evident. | None | 8 | 43.63 | 349.04 | one-ton truck | 2 | 26.84 | 53.68 | | | 402.72 | |
| TOTAL MULTI-CHAMBER TREATMENT TRAINS | | | | | | 64 | | 2792.32 | | | | 199.788 | | 1950 | 4942.108 | |
| OIL-WATER SEPARATOR | | | | | | | | | | | | | | | | |
| Preventive Maintenance and Routine Inspections | | | | | | | | | | | | | | | | |
| DESIGN CRITERIA, | | | | | | | | | | | | | | | | |
| ROUTINE ACTIONS | MAINTENANCE INDICATOR | FIELD MEASUREMENT | MEASUREMENT FREQUENCY | MAINTENANCE ACTIVITY | SITE-SPECIFIC REQUIREMENTS | | | | | | | | | | | |

# APPENDIX H Estimated O & M Costs for BMP Project

| Estimated vlaues derived from Caltrans Pilot BMP Study. This spreadsheet will change as additional data becomes available. | | | | | | Labor | | | Equipment | | | | Materials | | Total | Comments |
|---|---|---|---|---|---|---|---|---|---|---|---|---|---|---|---|---|
| | | | | | | Per. Hrs | Rate | Cost | Type | Days | rate | Cost | Item | Cost | Cost | |
| Inspect for sediment accumulation in the pre-separator and separator chamber | Greater than 12-inches | Measure with appropriate device | Annually | Prior to wet season, remove the accumulated material. Characterize and properly dispose. | None | 4 | 43.63 | 174.52 | | | | 0 | testing and disposal | 120 | 294.52 | every 5 years |
| Inspect for oil accumulation in oil chamber | Oil depth is not more than 50 percent of chamber volume | Gauge the level of oil/water with a wooden gauge stick | Annually | Prior to wet season remove and properly dispose of oil and grease. | None | 1 | 43.63 | 43.63 | | | | 0 | testing and disposal | 60 | 103.63 | every 5 years |
| Inspect coalescer for debris and gummy deposits | Debris or gummy deposits present | Visual observation | Annually | Wash the coalescer in an appropriate area with high-pressure hot water when needed. | None | 1 | 43.63 | 43.63 | | | | 0 | | | 43.63 | |
| Inspect water level in tank | Less than full | Visual observation | Annually | Fill with water prior to wet season. | None | 1 | 43.63 | 43.63 | | | | 0 | | | 43.63 | |
| Inspect for general mechanical integrity | Per manufacture's guidelines | Per manufacture's guidelines | Annually | Operate each mechanical component to ensure proper operation. Repair as needed | None | 4 | 43.63 | 174.52 | | | | 0 | | | 174.52 | |
| TOTAL OIL-WATER SEPARATOR | | | | | | 11 | | 479.93 | | | | 0 | | 180 | 659.93 | |
| WET BASIN | | | | | | | | | | | | | | | | |
| Preventive Maintenance and Routine Inspections | | | | | | | | | | | | | | | | |
| | | | | | | | | | | | | | | | | |
| DESIGN CRITERIA | | | | | | | | | | | | | | | | |
| ROUTINE ACTIONS | MAINTENANCE INDICATOR | FIELD MEASUREMENT | MEASUREMENT FREQUENCY | MAINTENANCE ACTIVITY | SITE-SPECIFIC REQUIREMENTS | | | | | | | | | | | |
| 24-hour draw down measured between the rim of the outlet structure and invert of the WQ orifice in the outlet structure. | Drawdown greater than 25 hours or water is flowing over weir. | Evaluate drain time from inlet and outlet flow data loggers or observe 25 hours after target2 storm (0.75 in) Observation of water flowing over spillway | Once during wet season and after completion or modification of the facility. | If >25-hours: | | 4 | 43.63 | 174.52 | one-ton truck | 1 | 26.84 | 26.84 | | | 201.36 | |
| | | | | □ Open gate to discharge water to permanent pool elevation. | | 2 | 43.63 | 87.26 | one-ton truck | 1 | 26.84 | 26.84 | | | 114.1 | |
| | | | | □ Clear outlet of debris. | | 2 | 43.63 | 87.26 | one-ton truck | 1 | 26.84 | 26.84 | | | 114.1 | |
| | | | | □ Consult engineer if needed. | | 2 | 43.63 | 87.26 | one-ton truck | 1 | 26.84 | 26.84 | | | 114.1 | |
| | | | | | | | | 0 | | | | 0 | | | 0 | |
| | | | | If water is spilling over weir, open canal gate until water level is at permanent pool elevation. Check/clear outlet of debris. | None | 4 | 43.63 | 174.52 | one-ton truck | 1 | 26.84 | 26.84 | | | 201.36 | |
| Inspect for burrows | Burrows, holes, mounds | Visual observation | Annually and after vegetation trimming. | Where burrows cause seepage, erosion and leakage, backfill firmly. | None | 4 | 43.63 | 174.52 | one-ton truck | 1 | 26.84 | 26.84 | | | 201.36 | |
| General Maintenance Inspection | Inlet structures, outlet structures, side slopes or other features damaged, significant erosion, graffiti or vandalism, fence damage, etc. | Visual observation | Semi-Annually, late wet season and late dry season | Take corrective action, or restore to as-constructed condition prior to wet season. Consult engineers if immediate solution is not evident. | None | 8 | 43.63 | 349.04 | one-ton truck | 2 | 26.84 | 53.68 | | | 402.72 | |

# APPENDIX H Estimated O & M Costs for BMP Project

| Estimated vlaues derived from Caltrans Pilot BMP Study. This spreadsheet will change as additional data becomes available. | | | | | | Labor | | | Equipment | | | | Materials | | Total | Comments |
|---|---|---|---|---|---|---|---|---|---|---|---|---|---|---|---|---|
| | | | | | | Per. Hrs | Rate | Cost | Type | Days | rate | Cost | Item | Cost | Cost | |
| Inspect Zone 1 4 for vegetation coverage and density to sustain vector abatement efficacy | | | | | | | | 0 | | | | 0 | | | 0 | |
| (See attachments for zone locations.) | Observable vegetation coverage/density | Visual, visible vegetation growth or emergent vegetation growth | Quarterly | 1. Have a biologist survey the Wet Basin to determine if any birds are nesting or other sensitive animals are present. If birds are nesting, with advice from the biologist, proceed with the maintenance. | | 8 | 70 | 560 | sedan | 1 | 21.28 | 21.28 | | | 581.28 | |
| | | | | 2. Lower and maintain the water level to expose the area to be maintained, do not completely drain basin | | 4 | 43.63 | 174.52 | one-ton truck | 1 | 26.84 | 26.84 | | | 201.36 | |
| | | | | 3. Mechanically remove allCut plantsvegetation | | 56 | 43.63 | 2443.28 | one-ton truck | 3 | 26.84 | 80.52 | string trimmer, hand tools, bags, safety equipment | 100 | 2623.8 | |
| | | | | 4. Dispose of the vegetation material in a landfill or other appropriate disposal area. | | 24 | 43.63 | 1047.12 | packer | 3 | 53.44 | 160.32 | hand tools, safety equipment | 50 | 1257.44 | |
| | | | | 4.5. Restock mosquito fish as recommended by vector control agency. | None | 8 | 70 | 560 | sedan | 1 | 21.28 | 21.28 | | | 581.28 | |
| Inspect Zone 2 4 for vegetation coverage and density to sustain vector abatement efficacy | Vegetation density is such that mosquito fish cannot swim freely in the planted area. | Mosquito fish cannot be seen in the planted area, vegetation density approximately 80 to 100 percent | Quarterly | Annually, or at a special request of the local vector control agency | | | | 0 | | | | 0 | | | 0 | |
| | | | | | | | | 0 | | | | 0 | | | 0 | |
| | | | | 1. Have a biologist survey the Wet Basin to determine if any birds are nesting or other sensitive animals are present. If birds are nesting, with advice from the biologist, proceed with the maintenance. | | 8 | 70 | 560 | sedan | 1 | 21.28 | 21.28 | | | 581.28 | |
| | | | | 2. Lower and maintain the water level to expose the area to be maintained, do not completely drain basin | | 4 | 43.63 | 174.52 | one-ton truck | 1 | 26.84 | 26.84 | | | 201.36 | |

# APPENDIX H Estimated O & M Costs for BMP Project

Estimated vlaues derived from Caltrans Pilot BMP Study. This spreadsheet will change as additional data becomes available.

| | | | | | | Labor | | | Equipment | | | | Materials | | Total | Comments |
|---|---|---|---|---|---|---|---|---|---|---|---|---|---|---|---|---|
| | | | | | | Per. Hrs | Rate | Cost | Type | Days | rate | Cost | Item | Cost | Cost | |
| | | | | 3. Mechanically removeCut Typha sp. (cattail), Scirpus sp. (bulrush) to produce random vegetation clusters (2-5 plants) with clusters at approximately 0.5 meters on center4. An effort should be made to maintain a ratio of Scirpus to Typha of 2:1. If the vegetation is cut, cut the vegetation to below the permanent pool water surface. | | 56 | 43.63 | 2443.28 | one-ton | 3 | 26.84 | 80.52 | string trimmer, hand tools, bags, safety equipment | 100 | 2623.8 | |
| | | | | 4. Dispose of the vegetation material in a landfill or other appropriate disposal area. | | 24 | | 0 | packer | 3 | 53.44 | 160.32 | hand tools, safety equipment | 50 | 210.32 | |
| | | | | 5. Monitor vegetation density quarterly to determine grow back rate. | None | 4 | 43.63 | 174.52 | one-ton | 1 | 26.84 | 26.84 | | | 201.36 | |
| Maintain Vegetated Access Road to reduce fire hazard from contact with vehicle catalytic converters. | | | | | | | | 0 | | | | 0 | | | 0 | |
| | | | | | | | | 0 | | | | 0 | | | 0 | |
| Inspect for sediment accumulation in forebay and main pond | More than 2 inches in the forebay and 4 inches in the main pond, or | Sediment depth exceeds marker on staff gage. | | | | | | 0 | | | | 0 | | | 0 | life cycle |
| | | Measure in forebay by estimating depth using stationing along concrete maintenance ramp. In main pond by measuring down from water quality orifice and comparing to as-constructed grade. | When pond is drained for Zone 1 vegetation removal, or every 3 years. | Remove and properly dispose of sediment. By November, restore vegetation to the plan shown on the as-built drawings. | La Costa site only | | | 0 | | | | 0 | | | 0 | life cycle |
| | | | | | | | | 0 | | | | 0 | | | 0 | |
| | | | | | | | | 0 | | | | 0 | | | 0 | |
| | | | | | | | | 0 | | | | 0 | | | 0 | |
| TOTAL WET BASIN | | | | | | 222 | | 9271.62 | | | | 840.76 | | 300 | 10412.38 | |

NOTES:

1. The design storm event is a storm that has a one year, 24 hour recurrence frequency.
2. A target storm event is a storm greater than 0.7525 inches of rainfall. For drain inlet inserts, a target storm event is a storm with a prediction of greater than 0.25 inches of rainfall.
3. Woody wetland vegetation consists of: willows (Salix spp), mule fat (baccharis salicifolia), cottonwood (populus fremontii), and western sycamore (plantanus racemosa). Note, this criterion is not applicable to the wet basin.
4. Zone 1, open water area of the basin, average depth is about 3 feet. Zone 2, shallow water bench, depth of water 0 –12 inches. Zone 3, periodic inundation is the temporary water storage volume impounded between the permanent pool and the overflow weir, i.e. the water quality storage. (See attachments for zone locations.) Zone A is the remaining upland slope between Zone 3 and the maintenance road.

This Maintenance Indicator Document has been developed using site specific information gathered by specialists trained in the identification of threatened and endangered species and their habitat. Information contained in this document includes guidance for inspection for possible

# APPENDIX H Estimated O & M Costs for BMP Project

| Estimated vlaues derived from Caltrans Pilot BMP Study. This spreadsheet will change as additional data becomes available. | | | | | | | | | | | | | | | | |
|---|---|---|---|---|---|---|---|---|---|---|---|---|---|---|---|---|
| | | | | | | Labor | | | Equipment | | | | Materials | | Total | Comments |
| | | | | | | Per. Hrs | Rate | Cost | Type | Days | rate | Cost | Item | Cost | Cost | |
| [illegible] threatened and endangered species harborage. Further, some of the maintenance recommendations are based on the requirements of specific plant species used in this Pilot Program. The recommendations provided in this document must be reassessed with respect to species and plant materials if the guidance contained herein is to be used for a separate project in another area. | | | | | | | | | | | | | | | | |

# APPENDIX F

## Environmentally Sensitive Areas

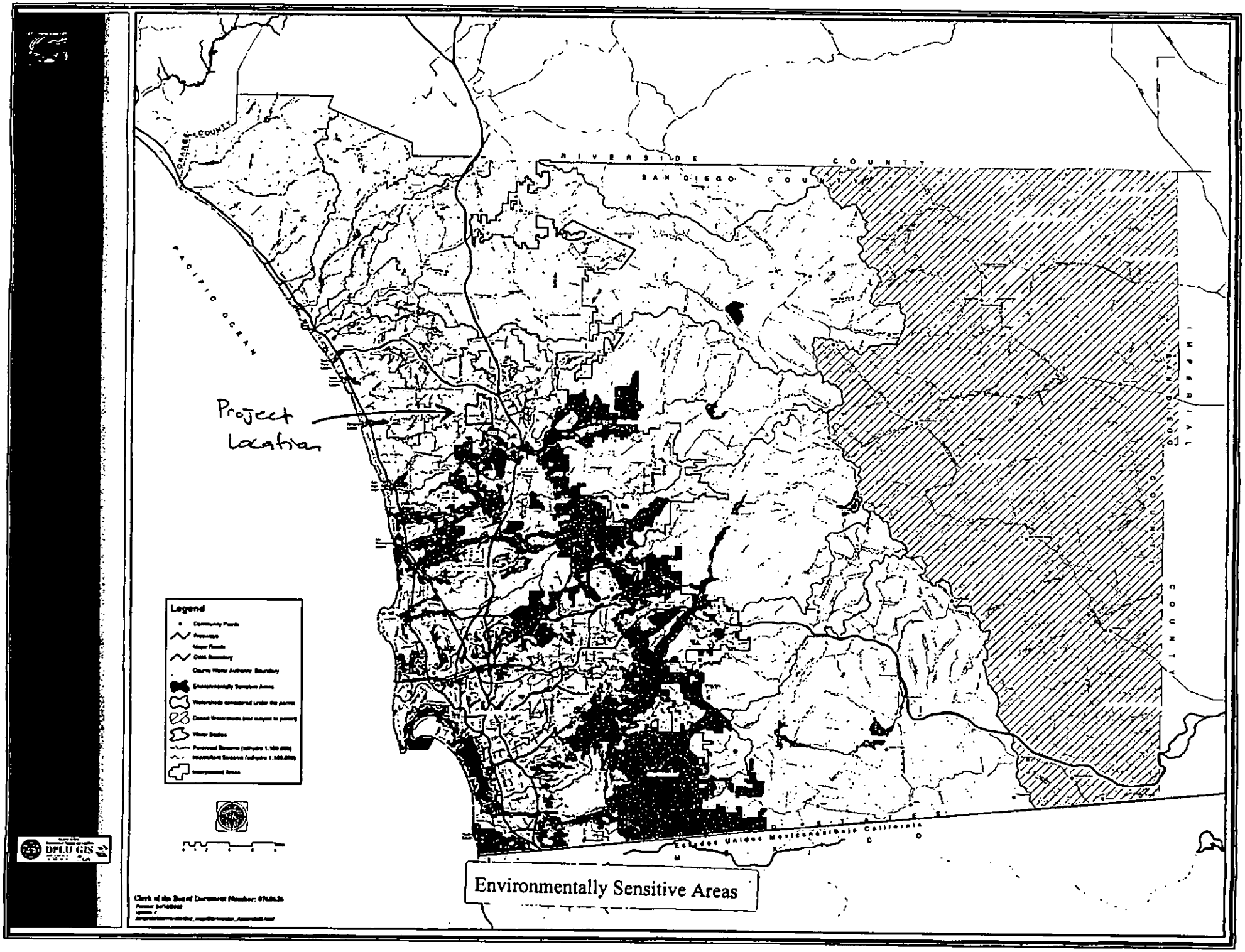

RIVERSIDE COUNTY
SAN DIEGO COUNTY
ORANGE COUNTY
PACIFIC OCEAN
IMPERIAL COUNTY
Project Location
Legend
Environmentally Sensitive Areas
DPLU GIS

# MAP POCKET 1

## Storm Water Management Plan Exhibit for Harmony Grove Village

# STORM WATER MANAGEMENT PLAN EXHIBIT
# FOR
# HARMANY GROVE VILLAGE

## LEGEND

MAJOR DRAINAGE BASIN BOUNDARY .....

HYDRODYNAMIC SEPARATOR (CDS UNIT) .....

DIVERSION BOX .....

ENHANCED BIO SWALES .....

VEGETATED CHANNEL (EXCLUDING DROP STRUCTURES) .....

STORM DRAIN MAIN ..... SD

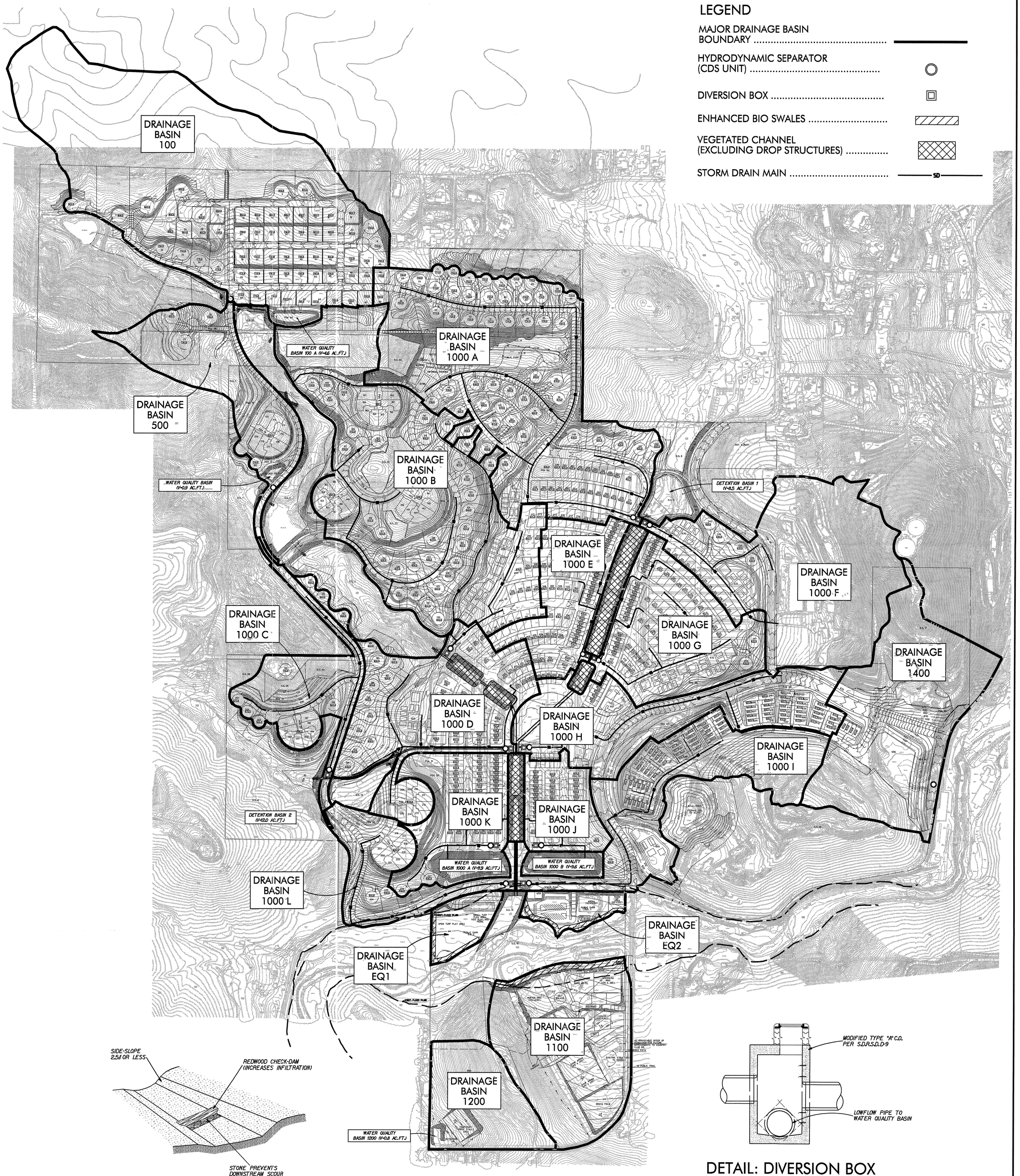





## DETAIL: ENHANACED BIO SWALE

NOT TO SCALE




## DETAIL: DIVERSION BOX

NOT TO SCALE

N

200 100 0 200 400 600

GRAPHIC SCALE 1"= 200'


RICK ENGINEERING COMPANY
5620 FRIARS ROAD
SAN DIEGO, CA 92110
619.291.0707
(FAX)619.291.4165
rickengineering.com
San Diego Riverside Sacramento Orange Phoenix Tucson


STORM WATER MANAGEMENT PLAN EXHIBIT FOR HARMANY GROVE VILLAGE

MARCH 21, 2006

# MAP POCKET 2

## Tentative Maps for Harmony Grove Village (Post-Project Condition), Sheets 1, 2 and 3 of 5

# COUNTY OF SAN DIEGO TRACT
# VESTING TENTATIVE MAP NO. 5365
## (VESTING FOR RESIDENTIAL ONLY)

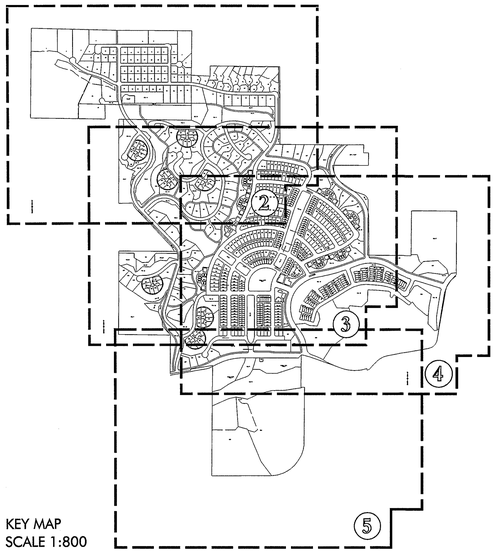


KEY MAP
SCALE 1:800

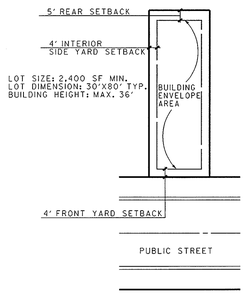


LIVE WORK

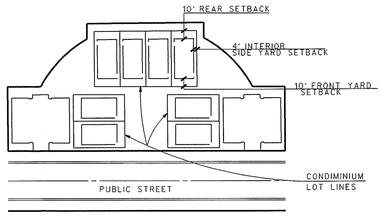


VILLAGE COURT HOMES

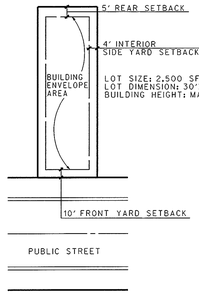


VILLAGE & HILLSIDE COTTAGES

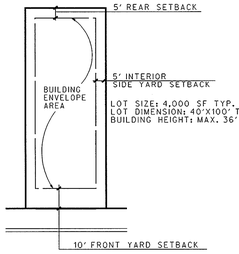


VILLAGE BUNGALOWS

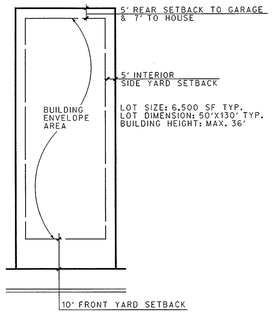


VILLAGE HOMES

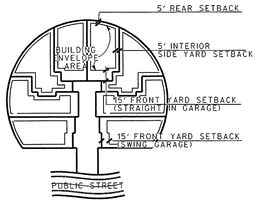


LOT SIZE: 6,500 SF TYP.
LOT DIMENSION: VARIES
BUILDING HEIGHT: MAX. 36'

HILLSIDE COMPOUND

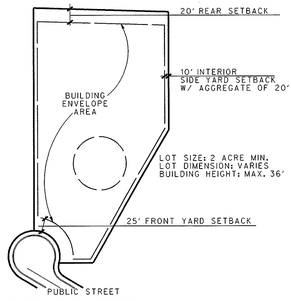


GROVE FARMHOUSE

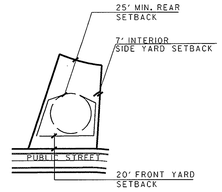


LOT SIZE: 14,500 SF MIN.
LOT DIMENSION: VARIES
BUILDING HEIGHT: MAX. 36'

HILLSIDE FARMHOUSE

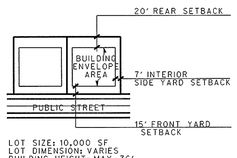


LOT SIZE: 10,000 SF
LOT DIMENSION: VARIES
BUILDING HEIGHT: MAX. 36'

GROVE COUNTRY HOUSE

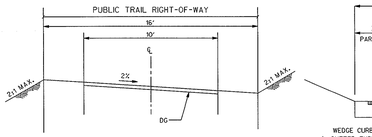


MULTI PURPOSE TRAIL

NOT TO SCALE

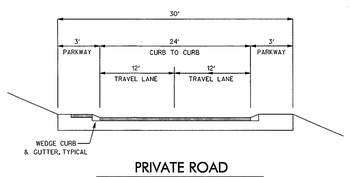


PRIVATE ROAD

NOT TO SCALE

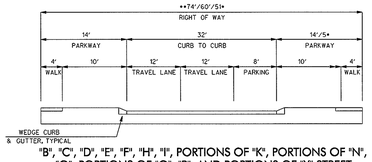


"B", "C", "D", "E", "F", "H", "I", PORTIONS OF "K", PORTIONS OF "N", "O", PORTIONS OF "Q", "R", AND PORTIONS OF "Y" STREET.

RESIDENTIAL LOCAL
(30 MPH)

NOT TO SCALE

* 5' Parkway with no sidewalk.
** With 14' left turn lane at Harmony Grove Rd.

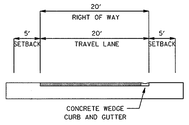


ALLEY
(PRIVATE)

NOT TO SCALE

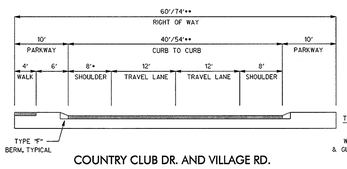


COUNTRY CLUB DR. AND VILLAGE RD.
RESIDENTIAL COLLECTOR
(30 MPH)

NOT TO SCALE

* Parking with 4' walk allowed at selected locations
** With 14' median turn lane

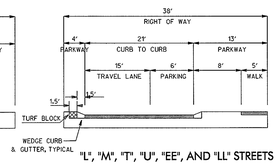


"L", "M", "T", "U", "EE", AND "LL" STREETS
ONE WAY RESIDENTIAL
(30 MPH)

NOT TO SCALE

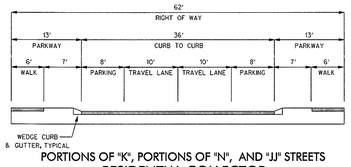


PORTIONS OF "K", PORTIONS OF "N", AND "JJ" STREETS
RESIDENTIAL COLLECTOR
(30 MPH)

NOT TO SCALE

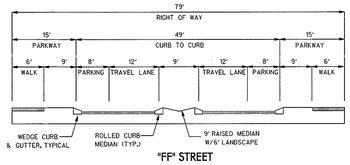


"FF" STREET
COMMERCIAL
(30 MPH)

NOT TO SCALE

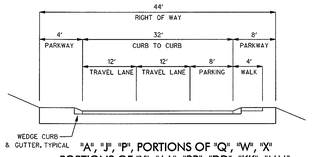


"A", "J", "P", PORTIONS OF "Q", "W", "X"
PORTIONS OF "Y", "AA", "BB", "DD", "KK", "MM", AND "NN" STREETS
HILLSIDE RESIDENTIAL
(30 MPH)

NOT TO SCALE

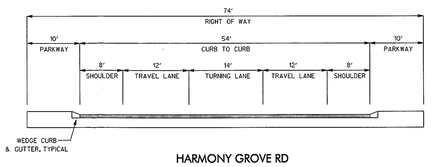


HARMONY GROVE RD
TOWN COLLECTOR
(40 MPH)

NOT TO SCALE

## NOTES

1. EXISTING ZONING - A-70, A-72, S-82
2. PROPOSED ZONING - S-88
3. GROSS ACREAGE WITHIN SUBDIVISION BOUNDARY: 468.60 ACRES. NET AREA: 286.60 ACRES
4. TOTAL NUMBER OF LOTS: 633 RESIDENTIAL LOTS
5. MINIMUM RESIDENTIAL LOT SIZE BEING CREATED IS 2200 SF.
6. DISTRICT UTILITIES:
   A. SEWER - NEW COUNTY SANITATION DISTRICT
   B. WATER - RECON DEL DIABLO MWD & VALLECITOS MWD
   C. GAS & ELECTRIC - SAN DIEGO GAS & ELECTRIC COMPANY
   D. TELEPHONE - PACIFIC BELL TELEPHONE
   E. FIRE - ELFIN FOREST FIRE DISTRICT
   F. SCHOOLS - ESCONDIDO UNION SCHOOL DISTRICT (K-8TH GRADE)
      ESCONDIDO UNION HIGH SCHOOL DISTRICT (9-12TH GRADE)
   G. STREET LIGHTS - WAIVER REQUESTED (DARK SKY POLICY)
7. ALL PROPOSED UTILITIES TO BE UNDERGROUND (REFER TO VTM FOR LOCATION).
8. EXISTING GENERAL PLAN DESIGNATION: 17, 19, & 24
   CATEGORY: EDA AND ECA
9. EXISTING TOPOGRAPHY WAS COMPILED USING PHOTOGRAMMETRIC METHODS FROM AERIAL PHOTOGRAPHY BY RICK ENGINEERING COMPANY FEBRUARY 10, 2003 & JULY 9, 2003 AT 300 SCALE, CONTOUR INTERVAL OF 2 FEET
10. SETBACKS: SEE 'TYPICAL RESIDENTIAL LOT' THIS SHEET
11. DRAINAGE: STREETS & STORM DRAIN AS REQUIRED.
12. ALL ONSITE STREETS WILL BE PUBLIC.
13. LOTS 626-633 OF THIS SUBDIVISION ARE CONDOMINIUM PROJECTS AS DEFINED IN SECTION 1350 OF THE CIVIL CODE OF STATE OF CALIFORNIA AND IS FILED PURUANT TO THE SUBDIVISION MAP ACT. THE TOTAL NUMBER OF UNITS IS 64.
14. THIS PROJECT IS A MULTI-UNIT SUBDIVISION. ORDER OF FILING FINAL MAPS MAY VARY. MULTIPLE FINAL MAPS WILL BE FILED PURSUANT TO SECTION 66456.1 OF THE SUBDIVISION MAP ACT.
15. PHASING OF THE PROJECT WILL BE ACCOMPLISHED BY RECORDATION OF FINAL MAPS BY UNIT.
16. PERCOLATION TEST FILE NO. LOW53651.
17. THE FOLLOWING LOTS ARE IN TWO TAX RATE AREAS: LOTS 157,159-162, O.S.1, O.S. 2, O.S. 18, O.S. 20, O.S. 22, POA 4, POA 7, POA 8, POA 11, AND POA 14. THE TAX RATE BOUNDARY IS PROPOSED TO BE CHANGED TO ACCOMMODATE THE PROPOSED LOTS THE ARE LISTED.
18. A WAIVER OF SUBDIVISION ORDINANCE 81.401(I) (MAXIMUM SIDE LOT LINE DEFLECTION) IS REQUESTED FOR LOTS 33/34, 34/35, 94/95, 96/98, 104/105, 105/106, 106/107, 109/110, 111/112, 112/113, 113/114, 114/115, 134/135, 189/190, 190/191, 334/335.
19. RESOURCE PROTECTION ORDINANCE WAIVER OF OPEN SPACE EASEMENT REQUEST- APPLICANT IS REQUESTING A WAIVER PER THE RESOURCE PROTECTION ORDINANCE, ARTICLE IV, SECTION C FOR THE FOLLOWING LOTS: 6-7, 19, 56-57, 160-161, 172, 179-180, 196, 202-205, 208-223, 480-492, 519-520, 565-569, 571-578, 638, POA 4, POA 5, POA 7, POA 14, POA 17, POA 19, POA 21-31, POA 34, POA 46, AND POA 47.
20. ALL MULTI-USE TRAILS SHOWN ON THE VESTING TENTATIVE MAP WILL BE DEDICATED TO THE COUNTY OF SAN DIEGO.

## LEGEND / SYMBOL

| LEGEND | SYMBOL |
|---|---|
| SUBDIVISION BOUNDARY | |
| PROPOSED LOT LINE | |
| PROPOSED SLOPE (2:1 UNLESS OTHERWISE SHOWN) | |
| EXISTING CONTOUR | 350 |
| PROPOSED CONTOUR | 350 |
| LOT NUMBER | 21 |
| PAD ELEVATIONS | 330.0 |
| EASEMENT LINE | |
| VEGETATED SWALE | |
| IN-LINE TREATMENT FACILITY | IT |
| CATCH BASIN INSERT | CB |

## PRELIMINARY GRADING PLAN NOTE

1. THIS PLAN IS PROVIDED TO ALLOW FOR FULL AND ADEQUATE DISCRETIONARY REVIEW OF A PROPOSED DEVELOPMENT PROJECT. THE PROPERTY OWNER ACKNOWLEDGES THAT ACCEPTANCE OR APPROVAL OF THIS PLAN DOES NOT CONSTITUTE AN APPROVAL TO PERFORM ANY GRADING SHOWN HEREON, AND AGREES TO OBTAIN A VALID GRADING PERMIT BEFORE COMMENCING SUCH ACTIVITY.
2. ALL GRADING DETAILS WILL BE IN ACCORDANCE WITH SAN DIEGO REGIONAL STANDARD DRAWING DS-8, DS-10, DS-11 AND D-75.

## ASSESSOR'S PARCEL NUMBERS & TAX RATE AREA TABLE

| PARCEL NUMBER | TAX RATE AREA |
|---|---|
| 235-031-31 | 74173 |
| 235-031-32 | 74173 |
| 235-031-33 | 74173 |
| 232-013-04 | 74035 |
| 232-013-05 | 74035 |
| 232-500-09 | 74035 |
| 232-500-11 | 74035 |
| 222-101-03 | 74023 |
| 222-101-05 | 74023 |
| 235-031-06 | 74173 |
| 235-031-09 | 74173 |
| 235-032-28 | 74173 |
| 235-031-07 | 74173 |
| 235-031-08 | 74173 |
| 235-031-02 | 74173 |
| 235-031-05 | 74173 |
| 235-031-10 | 74173 |
| 235-010-22 | 74173 |
| 235-031-11 | 74173 |
| 235-010-16 | 74173 |
| 235-010-17 | 74173 |
| 235-010-21 | 74173 |
| 235-011-01 | 74173 |
| 235-011-02 | 74173 |
| 235-031-27 | 74173 |
| 235-031-28 | 74173 |
| 235-031-36 | 74173 |
| 235-031-37 | 74173 |
| 235-031-29 | 74173 |
| 235-031-30 | 74173 |
| 235-031-35 | 74173 |
| 235-031-38 | 74173 |
| 235-031-34 | 74173 |
| 235-032-27 | 74173 |
| 235-032-28 | 74173 |

## LEGAL DESCRIPTION

BEING A PORTION OF SECTION 30, A PORTION OF THE NORTHEAST QUARTER AND THE SOUTHEAST QUARTER OF SECTION 25, A PORTION OF THE SOUTHEAST QUARTER OF SECTION 24, AND A PORTION OF THE SOUTHWEST QUARTER OF SECTION 19, ALL IN TOWNSHIP 12 SOUTH, RANGE 2 WEST, SAN BERNARDINO MERIDIAN.

## GRADING QUANTITIES

CUT: 2,897,000 CY (APPROX)
FILL: 2,897,000 CY (APPROX)

## LAMBERT COORDINATES

338/1725

## DEVELOPER

NEW URBAN WEST MANAGEMENT, LLC
520 BROADWAY, SUITE 100
SANTA MONICA, CA 90401

TELEPHONE: (310) 394-3379

## SLOPE ANALYSIS TABLE

| | |
|---|---|
| 0-15% SLOPES | 253 AC. |
| 15-25% SLOPES | 106 AC. |
| 25-50% SLOPES | 77 AC. |
| 50% OR GREATER SLOPES | 32 AC. |

## RESIDENTIAL DEVELOPMENT REGULATIONS

| LIVE-WORK (LOTS 436-443, 446-452, 477-481, 525-530) | | |
|---|---|---|
| LOT SIZE | | 2,500 SF MINIMUM |
| LOT DIMENSION | | 30'X85' TYPICAL |
| HOUSING TYPE | | SINGLE FAMILY DETACHED WITH ATTACHED GARAGE |
| SETBACKS: | FRONT YARD | 4' MIN. |
| | SIDE YARD | 4', W/ RECIPROCAL USE EASEMENTS ON ADJACENT LOT |
| | REAR YARD | 5' MIN. |
| PARKING | | 2 TO 3 CAR GARAGE. ON STREET PARKING WILL ALSO BE AVAILABLE FOR VISITOR AND RETAIL/OFFICE USES |
| BUILDING HEIGHT * | | MIXTURE OF 2-3 STORIES W/ MAXIMUM HEIGHT OF 36' |

| VILLAGE COURT HOMES (LOTS 626-633) | | |
|---|---|---|
| LOT SIZE | | 2,200 SF MINIMUM |
| LOT DIMENSION | | 32'X70' TYPICAL |
| HOUSING TYPE | | SINGLE FAMILY CONDOMINIUMS WITH DETACHED GARAGE |
| SETBACKS: | FRONT YARD | 10' |
| | SIDE YARD | 4' |
| | REAR YARD | 10' |
| PARKING | | SEPARATE AND DETACHED GARAGE<br>VISITOR PARKING ALONG STREETS |
| BUILDING HEIGHT | | MIXTURE OF 1 & 2 STORIES W/ MAXIMUM HEIGHT OF 32' |

| VILLAGE&HILLSIDE COTTAGES (LOTS 291-308,351-368,410-424,444-445,453-454,504-518,531-541,579-625) | | |
|---|---|---|
| LOT SIZE | | 2,500 SF MINIMUM |
| LOT DIMENSION | | 30'X85' TYPICAL |
| HOUSING TYPE | | SINGLE FAMILY DETACHED WITH GARAGE ACCESSED FROM LANES IN REAR |
| SETBACKS: | FRONT YARD | 10' |
| | SIDE YARD | 4', W/ POSSIBLE ADJACENT SIDE YARD USE EASEMENT |
| | REAR YARD | 5' |
| PARKING | | GARAGE ACCESSED FROM ALLEY IN THE REAR. VISITOR PARKING PROVIDED ALONG STREETS. |
| BUILDING HEIGHT * | | MIXTURE OF 2-3 STORIES W/ MAXIMUM HEIGHT OF 36' |

| VILLAGE BUNGALOWS (LOTS 397-409, 428-435, 463-476, 482-503, 542-549, 554-560) | | |
|---|---|---|
| LOT SIZE | | 4,000 SF MINIMUM |
| LOT DIMENSION | | 40'X100' TYPICAL |
| HOUSING TYPE | | SINGLE FAMILY DETACHED WITH GARAGE ACCESSED FROM THE REAR. |
| SETBACKS: | FRONT YARD | 10' |
| | SIDE YARD | 5' |
| | REAR YARD | 5' |
| PARKING | | GARAGE ACCESSED FROM ALLEY IN THE REAR. VISITOR PARKING PROVIDED ALONG STREETS. |
| BUILDING HEIGHT * | | MIXTURE OF 1-3 STORIES W/ MAXIMUM HEIGHT OF 36' |

| VILLAGE HOMES (LOTS 249-290, 309-350, 369-396, 425-427, 455-462, 519-524, 550-553, 561-562) | | |
|---|---|---|
| LOT SIZE | | 6,500 SF MINIMUM |
| LOT DIMENSION | | 50'X130' TYPICAL |
| HOUSING TYPE | | SINGLE FAMILY DETACHED WITH GARAGE ACCESSED FROM THE REAR. |
| SETBACKS: | FRONT YARD | 10' |
| | SIDE YARD | 5' |
| | REAR YARD | 5' TO GARAGE & 7' TO HOUSE |
| PARKING | | GARAGE ACCESSED FROM ALLEY IN THE REAR. VISITOR PARKING PROVIDED ALONG STREETS. |
| BUILDING HEIGHT * | | MIXTURE OF 1-3 STORIES W/ MAXIMUM HEIGHT OF 36' |

| HILLSIDE COMPOUND (LOTS 139-146, 149-156, 160-167, 172-179, 197-204, 208-223, 563-578) | | |
|---|---|---|
| LOT SIZE | | 6,500 SF MINIMUM |
| LOT DIMENSION | | VARIES |
| HOUSING TYPE | | SINGLE FAMILY DETACHED WITH ATTACHED GARAGES |
| SETBACKS: | FRONT YARD | 15' SWING GARAGE/ LIVING AND 20' STRAIGHT IN GARAGE |
| | SIDE YARD | 5' |
| | REAR YARD | 5' |
| PARKING | | ATTACHED GARAGE. VISITOR PARKING PROVIDED IN COURTYARDS AND ALONG ADJACENT STREETS |
| BUILDING HEIGHT * | | MIXTURE OF 1-3 STORIES W/ MAXIMUM HEIGHT OF 36' |

| HILLSIDE FARMHOUSE (LOTS 8, 32-35, 69-138, 147-148, 157-159, 168-171, 180-195, 196, 205-207, 224-248) | | |
|---|---|---|
| LOT SIZE | | 14,500 SF MINIMUM |
| LOT DIMENSION | | VARIES |
| HOUSING TYPE | | SINGLE FAMILY DETACHED |
| SETBACKS: | FRONT YARD | 20' |
| | SIDE YARD | 7' |
| | REAR YARD | 25' |
| PARKING | | ATTACHED OR DETACHED GARAGE ON THE BUILDING PAD |
| BUILDING HEIGHT * | | MIXTURE OF 1-3 STORIES W/ MAXIMUM HEIGHT OF 36' |

| GROVE COUNRTY HOUSE (LOTS 9-31, 36-55, 59-68) | | |
|---|---|---|
| LOT SIZE | | 10,000 SF MINIMUM |
| LOT DIMENSION | | VARIES |
| HOUSING TYPE | | SINGLE FAMILY DETACHED |
| SETBACKS: | FRONT YARD | 15' |
| | SIDE YARD | 7' |
| | REAR YARD | 20' |
| PARKING | | ATTACHED GARAGE |
| BUILDING HEIGHT * | | MIXTURE OF 2-3 STORIES W/ MAXIMUM HEIGHT OF 36' |

| GROVE FARMHOUSE (LOTS 1-7, 56-58) | | |
|---|---|---|
| LOT SIZE | | 2 ACRES MINIMUM |
| LOT DIMENSION | | VARIES |
| HOUSING TYPE | | SINGLE FAMILY DETACHED |
| SETBACKS: | FRONT YARD | 25' |
| | SIDE YARD | 10' |
| | REAR YARD | 20' |
| PARKING | | ATTACHED OR DETACHED GARAGE ON THE BUILDING PAD |
| BUILDING HEIGHT * | | MIXTURE OF 1-3 STORIES W/ MAXIMUM HEIGHT OF 36' |

* FOR ALL RESIDENTIAL UNITS, A 3RD STORY ELEMENT IS ALLOWED WITHIN THE HEIGHT RESTRICTIONS PROVIDED THAT IT DOES NOT EXCEED 50% OF THE OVERALL FOOTPRINT.

## ENGINEER OF WORK

RICK ENGINEERING COMPANY
5620 FRIARS ROAD
SAN DIEGO, CALIFORNIA 92110

TELEPHONE: (619) 291-0707
FAX: (619) 291-4165

REGISTERED PROFESSIONAL ENGINEER — TIMOTHY J. MURPHY No. 35171 Exp. 9/30/05 CIVIL — STATE OF CALIFORNIA

DATE:
TIMOTHY J. MURPHY R.C.E. 35171

## OWNERS

BERNARD R. SCHEDELL
MARY R. SCHEDELL
1613 ENCINO DRIVE
ESCONDIDO, CA 92025

TELEPHONE: (760) 738-1382

BY: DATE:

BY: DATE:

EDMUND J. DEMLER
PAUL V. DEMLER
MARILYN M. DEMLER
c/o HARMONY EGG RANCH
2075 COUNTRY CLUB DRIVE
ESCONDIDO, CA 92029

TELEPHONE: (760) 741-9395

BY: DATE:

BY: DATE:

BY: DATE:

THE RICHARD AND MARGARET GENGER FAMILY TRUST
c/oo J. RICHARD GENGER
c/oo MARGARET MAURINE KING GENGER
2253 ELEVADO ROAD
VISTA, CA 92084

TELEPHONE: (760) 724-0345

BY: DATE:

BY: DATE:

GRE DERAADT 1974 TRUST
c/oo GRE DERAADT, TRUSTEE
2316 COUNTRY CLUB DRIVE
ESCONDIDO, CA 92029

TELEPHONE: (760) 745-1451

BY: DATE:

PIETERNELLA KESTING 1992 TRUST
PIETERNELLA KESTING
c/oo JACK WILGENBURG
11701 OLD RIVER ROAD
BAKERSFIELD, CA 93311-9736

TELEPHONE: (661) 832-3901

BY: DATE:

ASPENVIEW LAND INVESTMENTS, LLC
c/oo STEPHEN GUNTHER
520 BROADWAY, SUITE 100
SANTA MONICA, CA 90401

TELEPHONE: (310) 394-3379

BY: DATE:

WARD POULTRY FARMS, INC.
c/oo WILLIAM WILGENBURG
c/oo ARIE WILGENBURG
21348 BRESE DE LOMA
ESCONDIDO, CA 92029

TELEPHONE: (760) 445-5830

BY: DATE:

BY: DATE:

S&B LTD
BRYAN KEITH
RANCHO PACIFIC GROUP LLC
c/oo BRYAN KEITH
c/oo ROBERT KEITH
S&B LTD AND RANCHO PACIFIC
544 S. PACIFIC STREET, STE. D-101
SAN MARCOS, CA 92069

TELEPHONE: (760) 682-0900

BY: DATE:

RANCHO ESTATES &
MT. WHITNEY RANCH
c/oo ROBERT KOENIG
c/oo CHESTER FIRESTEIN
c/oo MARTIN FIRESTEIN
821 THAYER AVENUE
LOS ANGELES, CA 90024

TELEPHONE: (310) 279-2711

BY: DATE:

BY: DATE:

HANSON AGGREGATES PACIFIC SOUTHWEST, INC
c/oo MARVIN HOWELL
P.O. BOX 639069
SAN DIEGO, CA 92163

TELEPHONE: (858) 577-2770

BY: DATE:

BY: DATE:

## NORTH COUNTY METROPOLITAN PLAN AREA

EXISTING & PROPOSED: 17, 18, 19, & 24

## LAND USE TABLE

LOTS 1 - 633 - RESIDENTIAL LOTS
LOTS 634 - 636 - COMMERCIAL LOTS
LOT 637 - PUMP STATION
LOTS 638, 642 - EQUESTRIAN FACILITIES
LOT 639 - WASTE WATER RECLAMATION FACILITY
LOT 640 - FIRE STATION SITE
LOT 641 - INSTITUTIONAL SITE
LOTS POA 1, 6, 9, 12, 18, 22, 27, 29, 46, 48 - PRIVATE ROADS
LOTS POA 2-5, 7-8, 10-11, 13-17, 19-21, 23-26, 28, 30, 32-43, 45, 47, 49 - PRIVATE LANDSCAPE AREA
LOTS POA 31, 44, 50-54 - PRIVATE PARKS
PUBLIC PARK O.S. 1 - PUBLIC PARK O.S. 4 - PUBLIC PARKS
LOTS O.S. 1-20, 22-28 - OPEN SPACE
LOT O.S. 21 - PUBLIC TRAIL

## EXISTING ZONING

| USE REGULATIONS | A-70 | A-72 | A-72 | S-82 | A-70 |
|---|---|---|---|---|---|
| NEIGHBORHOOD REGULATIONS | L | N | N | T | L |
| DEVELOPMENT REGULATIONS | | | | | |
| DENSITY | 0.5 | 0.125 | 0.125 | - | 0.125 |
| LOT SIZE | 2 AC | 8 AC | 8 AC | - | 8 AC |
| BUILDING TYPE | C | C | C | W | C |
| MAXIMUM FLOOR AREA | - | - | - | - | - |
| FLOOR AREA RATIO | - | - | - | - | - |
| HEIGHT | G | G | G | P | G |
| COVERAGE | - | - | - | - | - |
| SETBACK | C | C | C | P | C |
| OPEN SPACE | - | - | - | - | - |
| SPECIAL AREA REGULATIONS | - | - | A | - | - |

## PROPOSED ZONING

| PLANNING AREAS | | GROVES | HILLSIDES | CORE | VILLAGE CENTER (less core) | EQUESTRIAN RANCH |
|---|---|---|---|---|---|---|
| | | BOX 1 | BOX 2 | BOX 3 | BOX 4 | BOX 5 |
| USE REGULATIONS | | S-88 | S-88 | S-88 | S-88 | S-88 |
| NEIGHBORHOOD REGULATIONS | | W | W | - | W | X |
| DEVELOPMENT REGULATIONS | DENSITY (PER ACRE) | 1.8 | 3.5 | 18.0 | 8.0 | 0.4 |
| | LOT SIZE (MIN.) | 10000 SF | 2200 SF | 2400 SF | 2200 SF | 2 ACRES |
| | BUILDING TYPE | C | C | C | C | L |
| | MAXIMUM FLOOR AREA | - | - | - | - | - |
| | FLOOR AREA RATIO | - | - | - | - | - |
| | HEIGHT | J | J | J | J | J |
| | COVERAGE | - | - | - | - | - |
| | SETBACK | V | V | V | V | V |
| | OPEN SPACE | - | - | - | - | - |
| SPECIAL AREA REGULATIONS | | - | - | D (COMMERCIAL USE ONLY) | D (INSTITUTIONAL USE ONLY) | - |

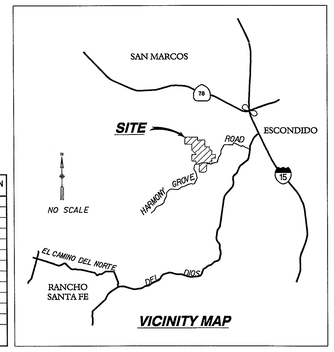


VICINITY MAP

© 2005 Rick Engineering Company

J. 14312
RICK ENGINEERING COMPANY
San Diego Riverside Orange Phoenix Tucson
5620 Friars Road • San Diego, CA 92110-2598 • (619) 291-0707 • FAX (619) 291-4165 • www.rickeng.com

| NO. | REVISION | PREPARED BY | DATE |
|---|---|---|---|
| 1 | ORIGINAL | REC | 2-26-04 |
| 2 | REVISION FOR 2ND SUBMITTAL | REC | 1-31-05 |
| 3 | REV. FOR 1ST EIR SCREEN CHECK | REC | 5-20-05 |
| 4 | REVISION FOR 3RD SUBMITTAL | REC | 12-22-05 |

| NO. | REVISION | PREPARED BY | DATE |
|---|---|---|---|
| | | | |

# HARMONY GROVE VILLAGE
San Diego County CA.
New Urban West Management, LLC

VESTING TENTATIVE MAP
VTM NO. 5365

# COUNTY OF SAN DIEGO TRACT
# VESTING TENTATIVE MAP NO. 5365
## (VESTING FOR RESIDENTIAL ONLY)

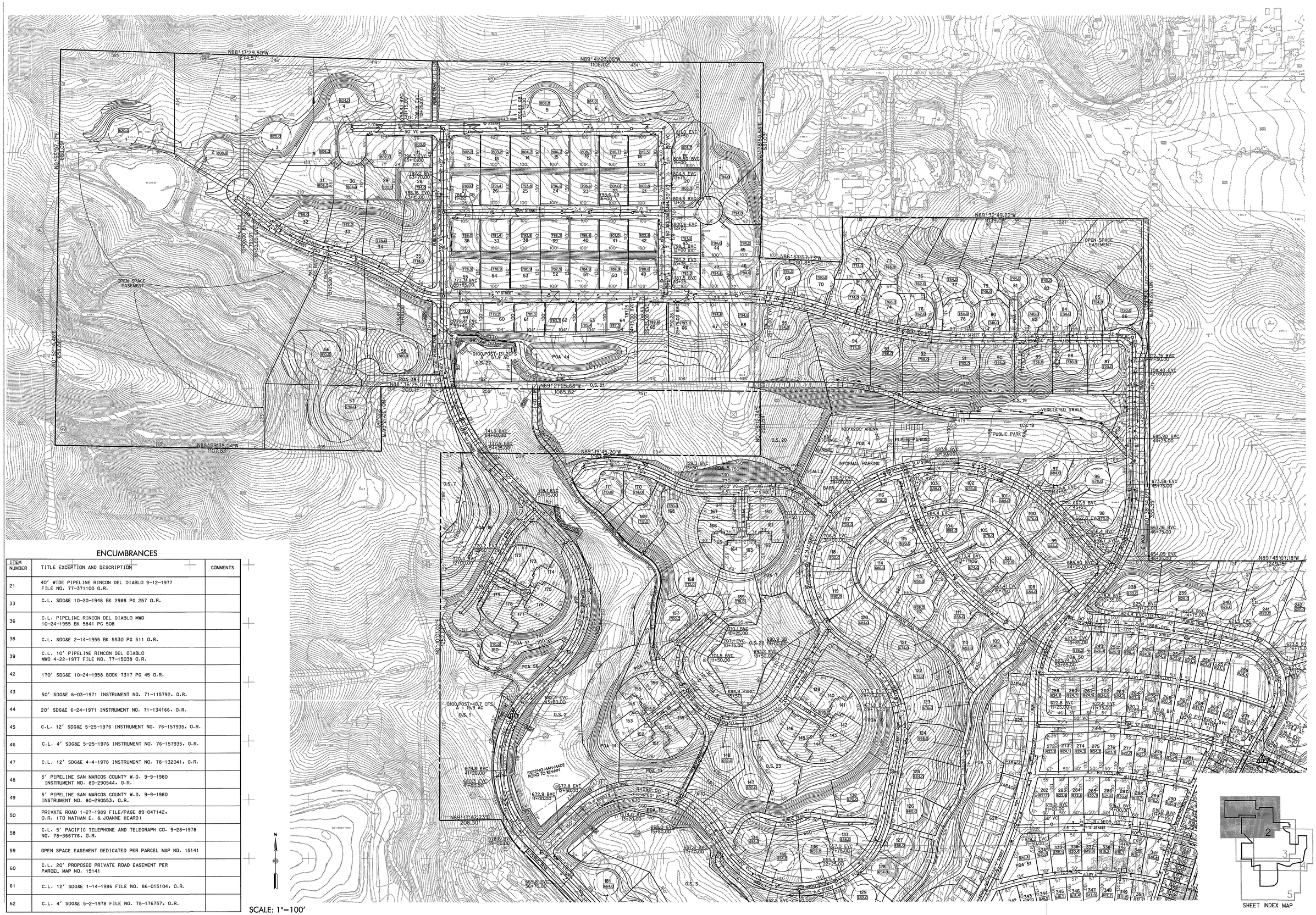


## ENCUMBRANCES

| ITEM NUMBER | TITLE EXCEPTION AND DESCRIPTION | COMMENTS |
|---|---|---|
| 21 | 40' WIDE PIPELINE RINCON DEL DIABLO 9-12-1977 FILE NO. 77-371100 O.R. | |
| 33 | C.L. SDG&E 10-20-1948 BK 2988 PG 257 O.R. | |
| 36 | C.L. PIPELINE RINCON DEL DIABLO MWD 10-24-1955 BK 5841 PG 508 | |
| 38 | C.L. SDG&E 2-14-1955 BK 5530 PG 511 O.R. | |
| 39 | C.L. 10' PIPELINE RINCON DEL DIABLO MWD 4-22-1977 FILE NO. 77-15038 O.R. | |
| 42 | 170' SDG&E 10-24-1958 BOOK 7317 PG 45 O.R. | |
| 43 | 50' SDG&E 6-03-1971 INSTRUMENT NO. 71-115792, O.R. | |
| 44 | 20' SDG&E 6-24-1971 INSTRUMENT NO. 71-134166, O.R. | |
| 45 | C.L. 12' SDG&E 5-25-1976 INSTRUMENT NO. 76-157935, O.R. | |
| 46 | C.L. 4' SDG&E 5-25-1976 INSTRUMENT NO. 76-157935, O.R. | |
| 47 | C.L. 12' SDG&E 4-4-1978 INSTRUMENT NO. 78-132041, O.R. | |
| 48 | 5' PIPELINE SAN MARCOS COUNTY W.D. 9-9-1980 INSTRUMENT NO. 80-290544, O.R. | |
| 49 | 5' PIPELINE SAN MARCOS COUNTY W.D. 9-9-1980 INSTRUMENT NO. 80-290553, O.R. | |
| 50 | PRIVATE ROAD 1-27-1989 FILE/PAGE 89-047142, O.R. (TO NATHAN E. & JOANNE HEARD) | |
| 58 | C.L. 5' PACIFIC TELEPHONE AND TELEGRAPH CO. 9-28-1978 NO. 78-366776, O.R. | |
| 59 | OPEN SPACE EASEMENT DEDICATED PER PARCEL MAP NO. 15141 | |
| 60 | C.L. 20' PROPOSED PRIVATE ROAD EASEMENT PER PARCEL MAP NO. 15141 | |
| 61 | C.L. 12' SDG&E 1-14-1986 FILE NO. 86-015104, O.R. | |
| 62 | C.L. 4' SDG&E 5-2-1978 FILE NO. 78-176757, O.R. | |


RICK ENGINEERING COMPANY J. 14312
San Diego Riverside Orange Phoenix Tucson
5620 Friars Road • San Diego, CA 92110-2596 • (619) 291-0707 • FAX (619) 291-4165 • www.rickeng.com


| NO. | REVISION | PREPARED BY | DATE |
|---|---|---|---|
| 1 | ORIGINAL | REC | 2-26-04 |
| 2 | REVISION FOR 2ND SUBMITTAL | REC | 1-31-05 |
| 3 | REV. FOR 1ST EIR SCREEN CHECK | REC | 5-20-05 |
| 4 | REVISION FOR 3RD SUBMITTAL | REC | 12-22-05 |

| NO. | REVISION | PREPARED BY | DATE |
|---|---|---|---|
| | | | |

# HARMONY GROVE VILLAGE
San Diego County CA.
New Urban West Management, LLC

VESTING TENTATIVE MAP
VTM NO. 5365

2

© 2005 Rick Engineering Company

# COUNTY OF SAN DIEGO TRACT
# VESTING TENTATIVE MAP NO. 5365
## (VESTING FOR RESIDENTIAL ONLY)

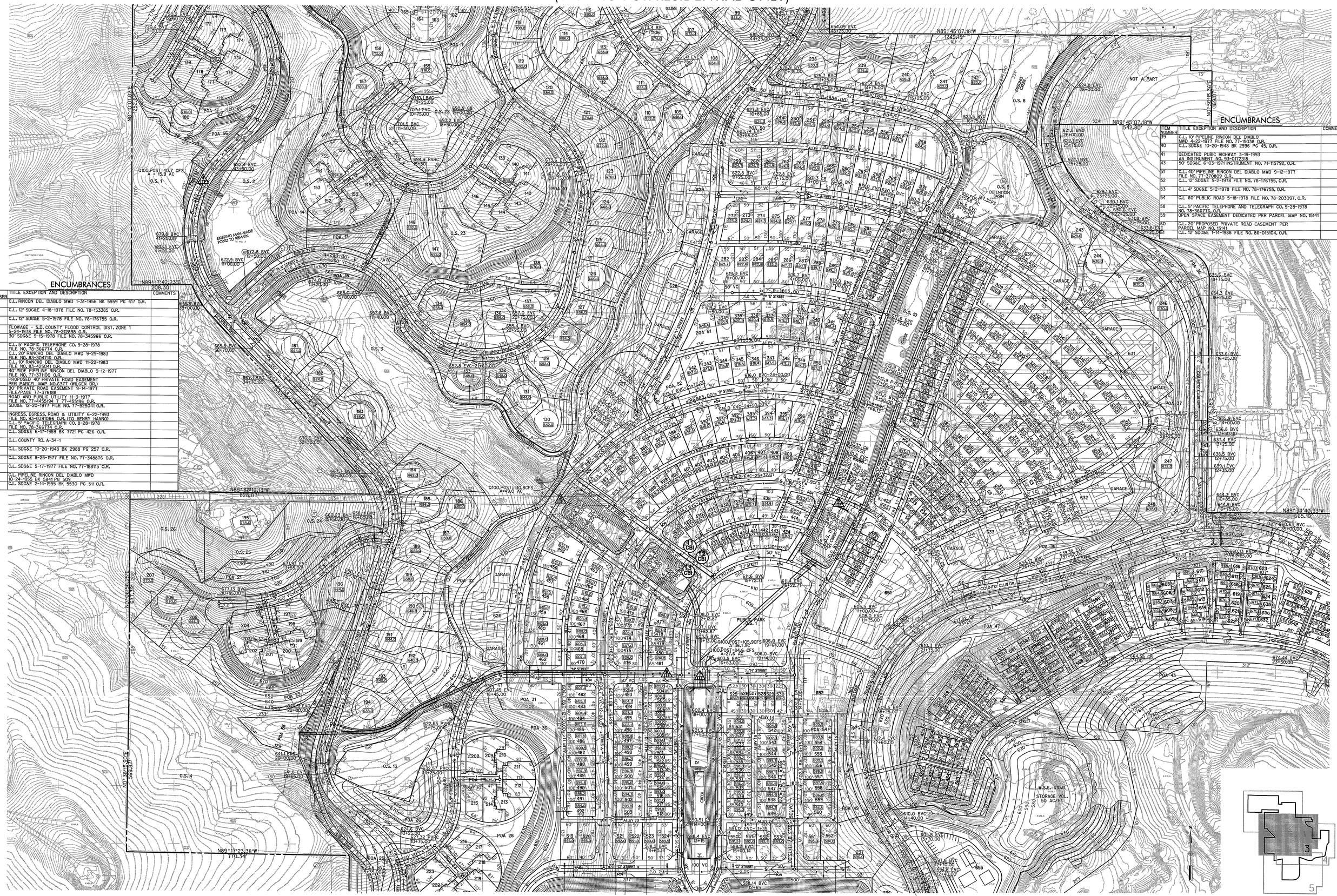


### ENCUMBRANCES

| ITEM NUMBER | TITLE EXCEPTION AND DESCRIPTION | COMMENTS |
|---|---|---|
| 10 | C.L. RINCON DEL DIABLO MWD 1-31-1956 BK 5959 PG 417 O.R. | |
| 11 | C.L. 12' SDG&E 4-18-1978 FILE NO. 78-153385 O.R. | |
| 12 | C.L. 12' SDG&E 5-2-1978 FILE NO. 78-176755 O.R. | |
| 14 | FLOWAGE - S.D. COUNTY FLOOD CONTROL DIST. ZONE 1 5-24-1978 FILE NO. 78-212898 O.R. | |
| 16 | 30' SDG&E 9-15-1978 FILE NO. 78-345966 O.R. | |
| 17 | C.L. 5' PACIFIC TELEPHONE CO. 9-28-1978 FILE NO. 78-366774 O.R. | |
| 18 | C.L. 20' RANCHO DEL DIABLO MWD 9-29-1983 FILE NO. 83-304708 O.R. | |
| 19 | C.L. 10' RANCHO DEL DIABLO MWD 11-22-1983 FILE NO. 83-425041 O.R. | |
| 21 | 40' WIDE PIPELINE RINCON DEL DIABLO 9-12-1977 FILE NO. 77-371100 O.R. | |
| 22 | PROPOSED 40' PRIVATE ROAD EASEMENT PER PARCEL MAP NO.6377 (WILGEN DR.) | |
| 23 | 30' PRIVATE ROAD EASEMENT 9-14-1977 FILE/PAGE 77-376188 | |
| 24 | ROAD AND PUBLIC UTILITY 11-3-1977 FILE NO. 77-465094 & 77-465095 O.R. | |
| 25 | SDG&E 12-20-1977 FILE NO. 77-525041 O.R. | |
| 26 | INGRESS, EGRESS, ROAD & UTILITY 6-22-1993 FILE NO. 93-0391066 O.R. (TO HENST (HANNO) | |
| 27 | C.L. 5' PACIFIC TELEGRAPH CO. 9-28-1978 FILE NO. 78-366774 O.R. | |
| 29 | C.L. SDG&E 6-17-1959 BK 7721 PG 426 O.R. | |
| 31 | C.L. COUNTY RD. A-34-1 | |
| 33 | C.L. SDG&E 10-20-1948 BK 2988 PG 257 O.R. | |
| 34 | C.L. SDG&E 8-25-1977 FILE NO. 77-348876 O.R. | |
| 35 | C.L. SDG&E 5-17-1977 FILE NO. 77-188115 O.R. | |
| 36 | C.L. PIPELINE RINCON DEL DIABLO MWD 10-24-1955 BK 5841 PG 209 | |
| 38 | C.L. SDG&E 2-14-1955 BK 5530 PG 511 O.R. | |

### ENCUMBRANCES

| ITEM NUMBER | TITLE EXCEPTION AND DESCRIPTION | COMMENTS |
|---|---|---|
| 39 | C.L. 10' PIPELINE RINCON DEL DIABLO MWD 4-22-1977 FILE NO. 77-15038 O.R. | |
| 40 | C.L. SDG&E 10-20-1948 BK 2996 PG 45, O.R. | |
| 41 | DEDICATED PUBIC HIGHWAY 3-19-1993 AS INSTRUMENT NO. 93-0172218 | |
| 43 | 50' SDG&E 6-03-1971 INSTRUMENT NO. 71-115792, O.R. | |
| 51 | C.L. 40' PIPELINE RINCON DEL DIABLO MWD 9-12-1977 FILE NO. 77-370809 O.R. | |
| 52 | C.L. 12' SDG&E 5-2-1978 FILE NO. 78-176755, O.R. | |
| 53 | C.L. 4' SDG&E 5-2-1978 FILE NO. 78-176755, O.R. | |
| 54 | C.L. 60' PUBLIC ROAD 5-18-1978 FILE NO. 78-203097, O.R. | |
| 58 | C.L. 5' PACIFIC TELEPHONE AND TELEGRAPH CO. 9-28-1978 NO. 78-366776, O.R. | |
| 59 | OPEN SPACE EASEMENT DEDICATED PER PARCEL MAP NO. 15141 | |
| 60 | C.L. 20' PROPOSED PRIVATE ROAD EASEMENT PER PARCEL MAP NO. 15141 | |
| 61 | C.L. 12' SDG&E 1-14-1986 FILE NO. 86-015104, O.R. | |


RICK ENGINEERING COMPANY
J. 14312
San Diego Riverside Orange Phoenix Tucson
5620 Friars Road • San Diego, CA 92110-2598 • (619) 291-0707 • FAX (619) 291-4165 • www.rickeng.com


| NO. | REVISION | PREPARED BY | DATE |
|---|---|---|---|
| 1 | ORIGINAL | REC | 2-26-04 |
| 2 | REVISION FOR 2ND SUBMITTAL | REC | 1-31-05 |
| 3 | REV. FOR 1ST EIR SCREEN CHECK | REC | 5-20-05 |
| 4 | REVISION FOR 3RD SUBMITTAL | REC | 12-22-05 |

| NO. | REVISION | PREPARED BY | DATE |
|---|---|---|---|
| | | | |

# HARMONY GROVE VILLAGE
San Diego County CA.
New Urban West Management, LLC

VESTING TENTATIVE MAP
VTM NO. 5365

3

# MAP POCKET 3

## Tentative Maps for Harmony Grove Village (Post-Project Condition), Sheets 4 and 5 of 5

# COUNTY OF SAN DIEGO TRACT
# VESTING TENTATIVE MAP NO. 5365
## (VESTING FOR RESIDENTIAL ONLY)

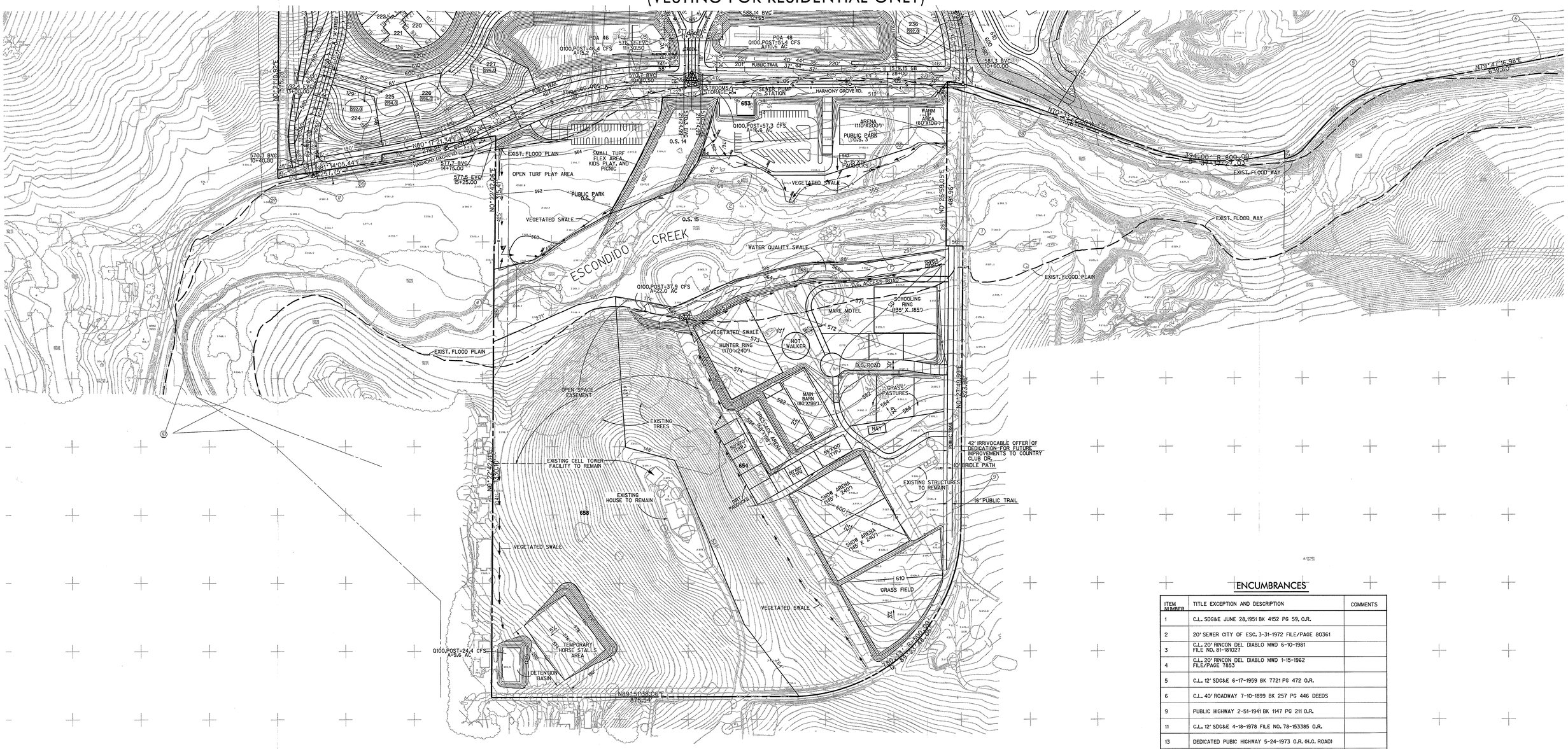


## ENCUMBRANCES

| ITEM NUMBER | TITLE EXCEPTION AND DESCRIPTION | COMMENTS |
|---|---|---|
| 1 | C.L. SDG&E JUNE 28,1951 BK 4152 PG 59, O.R. | |
| 2 | 20' SEWER CITY OF ESC. 3-31-1972 FILE/PAGE 80361 | |
| 3 | C.L. 20' RINCON DEL DIABLO MWD 6-10-1981 FILE NO. 81-181027 | |
| 4 | C.L. 20' RINCON DEL DIABLO MWD 1-15-1962 FILE/PAGE 7853 | |
| 5 | C.L. 12' SDG&E 6-17-1959 BK 7721 PG 472 O.R. | |
| 6 | C.L. 40' ROADWAY 7-10-1899 BK 257 PG 446 DEEDS | |
| 9 | PUBLIC HIGHWAY 2-51-1941 BK 1147 PG 211 O.R. | |
| 11 | C.L. 12' SDG&E 4-18-1978 FILE NO. 78-153385 O.R. | |
| 13 | DEDICATED PUBIC HIGHWAY 5-24-1973 O.R. (H.G. ROAD) | |
| 14 | FLOWAGE - S.D. COUNTY FLOOD CONTROL DIST. ZONE 1 5-24-1978 FILE NO. 78-212898 O.R. | |
| 15 | C.L. 4' SDG&E 6-6-1978 FILE NO. 78-232845 O.R. | |
| 18 | C.L. 20' RANCHO DEL DIABLO MWD 9-29-1983 FILE NO. 83-304716 O.R. | |
| 20 | 60' WIDE PRIVATE ROAD (PETER 7 SUZANNE R. ARTH, & WILLIAM W. CLARY JR.) 9-14-1989 FILE NO. 89-433080 O.R. (MILGEN DR.) | |
| 27 | C.L. 5' PACIFIC TELEGRAPH CO. 8-28-1978 FILE NO. 78-366774 O.R. | |
| 28 | C.L. 50' PUBLIC ROAD 5-21-1941 PAGE 29 O.R. | |
| 30 | 84' PUBLIC ROAD 1-12-1971 INSTRUMENT NO. 6352 O.R. | |
| 32 | C.L. WATER EASEMENT 3-29-1988 AS INSTRUMENT NO. 88-14156 O.R. | |
| 55 | C.L. PUBLIC HIGHWAY 5-24-1978 FILE NO. 78-212897, O.R. | |
| 56 | C.L. SDG&E 8-15-1978 FILE NO. 78-345966, O.R. | |
| 57 | C.L. SDG&E 9-11-1930 BOOK 1792, PG 344 OF DEEDS | |

N

SCALE: 1"=100'

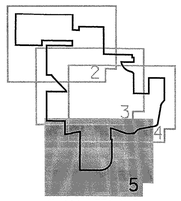


SHEET INDEX MAP


RICK ENGINEERING COMPANY
J. 14312
San Diego Riverside Orange Phoenix Tucson
5620 Friars Road • San Diego, CA 92110-2598 • (619) 291-0707 • FAX (619) 291-4165 • www.rickeng.com


| NO. | REVISION | PREPARED BY | DATE |
|---|---|---|---|
| 1 | ORIGINAL | REC | 2-26-04 |
| 2 | REVISION FOR 2ND SUBMITTAL | REC | 1-31-05 |
| 3 | REV. FOR 1ST EIR SCREEN CHECK | REC | 5-20-05 |
| 4 | REVISION FOR 3RD SUBMITTAL | REC | 12-22-05 |

| NO. | REVISION | PREPARED BY | DATE |
|---|---|---|---|
| | | | |

# HARMONY GROVE VILLAGE
San Diego County CA.
New Urban West Management, LLC

VESTING TENTATIVE MAP
VTM NO. 5365

5


© 2006 Rick Engineering Company

# COUNTY OF SAN DIEGO TRACT
## VESTING TENTATIVE MAP NO. 5365
(VESTING FOR RESIDENTIAL ONLY)

## ENCUMBRANCES

| ITEM NUMBER | TITLE EXCEPTION AND DESCRIPTION | COMMENTS |
|---|---|---|
| 1 | C.L. SDG&E JUNE 28,1951 BK 4152 PG 59, O.R. | |
| 2 | 20' SEWER CITY OF ESC. 3-31-1972 FILE/PAGE 80361 | |
| 5 | C.L. 12' SDG&E 6-17-1959 BK 7721 PG 472 O.R. | |
| 6 | C.L. 40' ROADWAY 7-10-1899 BK 257 PG 446 DEEDS | |
| 7 | 4' ANCHOR 6-29-67 FILE/PAGE 94618 | |
| 8 | 12' SDG&E 9-20-1970 FILE/PAGE 175965 | |
| 10 | C.L. RINCON DEL DIABLO MWD 1-31-1956 BK 5959 PG 417 O.R. | |
| 11 | C.L. 12' SDG&E 4-18-1978 FILE NO. 78-153385 O.R. | |
| 14 | FLOWAGE - S.D. COUNTY FLOOD CONTROL DIST. ZONE 1 5-24-1978 FILE NO. 78-212898 O.R. | |
| 15 | C.L. 4' SDG&E 6-6-1978 FILE NO. 78-232845 O.R. | |
| 16 | 30' SDG&E 9-15-1978 FILE NO. 78-345966 O.R. | |
| 18 | C.L. 20' RANCHO DEL DIABLO MWD 9-29-1983 FILE NO. 83-304716 O.R. | |
| 19 | C.L. 10' RANCHO DEL DIABLO MWD 11-22-1983 FILE NO. 83-425041 O.R. | |
| 28 | C.L. 20' PUBLIC ROAD 5-21-1941 PAGE 29 O.R. | |
| 29 | C.L. SDG&E 6-17-1959 BK 7721 PG 426 O.R. | |
| 30 | 84' PUBLIC ROAD 1-12-1971 INSTRUMENT NO. 6352 O.R. | |
| 31 | C.L. COUNTY RD. A-34-1 | |
| 32 | C.L. WATER EASEMENT 3-29-1988 AS INSTRUMENT NO. 88-14156 O.R. | |
| 34 | C.L. SDG&E 8-25-1977 FILE NO. 77-348876 O.R. | |
| 35 | C.L. SDG&E 5-17-1977 FILE NO. 77-188115 O.R. | |
| 39 | C.L. 10' PIPELINE RINCON DEL DIABLO MWD 4-22-1977 FILE NO. 77-15038 O.R. | |
| 40 | C.L. SDG&E 10-20-1948 BK 2996 PG 45, O.R. | |
| 41 | DEDICATED PUBIC HIGHWAY 3-19-1993 AS INSTRUMENT NO. 93-0172318 | |
| 52 | C.L. 12' SDG&E 5-2-1978 FILE NO. 78-176755, O.R. | |
| 53 | C.L. 4' SDG&E 5-2-1978 FILE NO. 78-176755, O.R. | |
| 55 | C.L. PUBLIC HIGHWAY 5-24-1978 FILE NO. 78-212897, O.R. | |
| 56 | C.L. SDG&E 8-15-1978 FILE NO. 78-345966, O.R. | |


RICK ENGINEERING COMPANY
J. 14312
San Diego Riverside Orange Phoenix Tucson
5620 Friars Road • San Diego, CA 92110-2596 • (619) 291-0707 • FAX (619) 291-4165 • www.rickeng.com


| NO. | REVISION | PREPARED BY | DATE |
|---|---|---|---|
| 1 | ORIGINAL | REC | 2-26-04 |
| 2 | REVISION FOR 2ND SUBMITTAL | REC | 1-31-05 |
| 3 | REV. FOR 1ST EIR SCREEN CHECK | REC | 5-20-05 |
| 4 | REVISION FOR 3RD SUBMITTAL | REC | 12-22-05 |

| NO. | REVISION | PREPARED BY | DATE |
|---|---|---|---|
| | | | |

# HARMONY GROVE VILLAGE
San Diego County CA.
New Urban West Management, LLC

VESTING TENTATIVE MAP
VTM NO. 5365

4

© 2005 Rick Engineering Company

# CALIFORNIA ENVIRONMENTAL QUALITY ACT (CEQA)
# DRAINAGE STUDY
# FOR HARMONY GROVE VILLAGE

**VTM 5365; GPA 04-04; MUP 04-012;**
**MUP 04-013; MUP 04-014; REZ 04-010;**
**SP 04-03; LOG NO. 04-08-011; SCH # 2004071004**

**Job Number 14312-B**
**February 27, 2004**
**Revised: October 11, 2004**
**Revised: December 3, 2004**
**Revised: May 23, 2005**
**Revised: December 19, 2005**
**Revised: January 18, 2006**

# CALIFORNIA ENVIRONMENTAL QUALITY ACT (CEQA) DRAINAGE STUDY

# FOR

# HARMONY GROVE VILLAGE

**Job Number 14312-B**

Prepared For

**New Urban West Management, LLC**
520 Broadway, Suite 100
Santa Monica, California 90401
(310) 394-3379

Prepared By

**Rick Engineering Company**
**Water Resources Department**
5620 Friars Road
San Diego, California 92110-2596
(619) 291-0707

**February 27, 2004**
**Revised: October 11, 2004**
**Revised: December 3, 2004**
**Revised: May 23, 2005**
**Revised: December 19, 2005**
**Revised: January 18, 2006**

| REVISION PAGE FOR THE DRAINAGE STUDY FOR HARMONY GROVE VILLAGE | |
|---|---|
| J-14312-B | |
| **DATE** | **REVISION/CHANGES MADE TO PROJECT** |
| 27-Feb-04 | Original submittal to the County of San Diego. |
| 11-Oct-04 | Changes have been made to accommodate the County of San Diego plan check comments dated May 24, 2004. |
| 3-Dec-04 | Changes have been made to accommodate Helix Environmental plan check comments. |
| 3-Dec-04 | Changes have been made due to the change in grading for the southwestern Equestrian Site. |
| 3-Dec-04 | Changes have been made to the corresponding drainage workmaps to incorporate the Effective 100-year Floodplain and Floodway. |
| 23-May-05 | Changes have been made to accommodate the County of San Diego plan check comments dated April 21, 2005. |
| 19-Dec-05 | Changes have been made to accommodate the County of San Diego plan check comments dated July 13, 2005. |
| 18-Jan-06 | Changes have been made to accommodate the County of San Diego plan check comments to the December 19, 2005 report. |

# (CEQA) DRAINAGE STUDY REPORT FOR

## HARMONY GROVE VILLAGE

## REVISION PAGE

**January 18, 2006**

Rick Engineering Company has reviewed the Department of Public Works Plan Check comments in regards to the December 19, 2005 report titled *Drainage Study For Harmony Grove Village (Tentative Map)* The following text is the plan check comments (in italicized lettering) and Rick Engineering Company's responses (in bold lettering).

*1 Cover Pls Add CEQA, remove (TENTATIVE MAP)*

**Response: The cover page has been revised, and as a result the word "CEQA" has been added and the words "Tentative Map" have been removed.**

*2 Cover Page Add CEQA, remove (TENTATIVE MAP)*
**Response: The cover page has been revised, and as a result the word "CEQA" has been added and the words "Tentative Map" have been removed.**

*3 Page 1 1st paragraph, "change east to west"*
**Response: The Project description has been revised and as a result the word "east" has been changed to "west".**

*4 Page 7 3rd paragraph, Detention basin 1 is circled with "Label the Composite Site Plan (TYP )"*

**Response: The Composite Site Plan has been revised to show the location of the detention basins. Detention Basin 1 is now labeled on the Composite Site Plan.**

*5 Page 9 1st sentence, Detention basin 2 is circled with "Label the Composite Site Plan"*

**Response: The Composite Site Plan has been revised to show the location of the detention basins. Detention Basin 2 is now labeled on the Composite Site Plan.**

*6 Page 9 4th paragraph, volume is circled with "pls Discuss dimensions & geometric shape for these basins"*

**Response: The text has been revised to include dimensions and geometric shape for each basin: Detention Basin 1 has a volume of 6.6 acre-foot, with 2 to 1 side slopes and graded to drain at a ½ percent. Detention Basin 2 has a volume of 8.1 acre-foot, with 2 to 1 side slopes and graded to drain at a ½ percent. Detention Basin 1 is located at the northerly portion of**

**the project, and Detention Basin 2 is located in the southwest portion of the project. Please refer to Map Pocket 1 for the locations of the detention basins and Appendix B for detailed volume calculations (PondPack) based on the current topographic conditions and proposed grading as shown on the Composite Site Plan.**

*7 Page 10 Bottom of the page note says, "Also, pls Include the Eden Valley Report for comparison purposes with cfs/acre "*

**Response: The text has been revised and as a result there is a comparison of the cfs/acre from the Eden Valley Report provided in Table 2**

*8 Page 11 2nd paragraph, 19,000 cubic feet per second (cfs) is circled with, "pls expand why this Q is used in the proposed condition as well"*

**Response: According to the 2003 Hydrology Manual flowrate information is already established through one or more of the following resources for several systems in San Diego County: Master Plan Development, Studies for Development and Road Projects, Flood Insurance Studies (FIS) and Recorded Flows. The flowrate of 19,000 cfs is from FEMA's FIS. In addition the 2003 Hydrology Manual states "Rivers and creeks that have floodplain or alluvial fan maps may be identified through the FIS for San Diego County." Our project, on site is detaining for the 100-year storm event. The detention basins are attenuating post-project flows to pre-project conditions. Therefore the 19,000 cfs will be used for pre- and post-project HEC-2 analyses of Escondido Creek.**

*9 Page 11 2nd paragraph, "form" is circled with "sp"*

**Response: The misspelled word has been revised and as a result the word "form" has been changed to "from".**

*10 Page 14 Throughout table, numbers written with "pls check and adjust conclusions accordingly"*

**Response: Table 3 has been revised and as a result the conclusions have been revised accordingly.**

*11 Appendix B Post Project Basin 10 is circled with, "pls provide worksheet"*
**Response: The worksheet for Basin 10 was out of order. Please see the revised report (Appendix B) with the Basin 10 worksheet in the appropriate place.**

*12 Appendix B Post Project "Pls provide Basin 10 worksheet as well" written next to it with an arrow on it*

**Response: The worksheet for Basin 10 was out of order. Please see the revised report (Appendix B) with the Basin 10 worksheet in the appropriate place.**

*13 Appendix F 100-Year Storm Event, Pre-Project Condition Page 1, line 22, has "2 8" circled with "2 97? (typ )" written next to it*

**Response: The total watershed (Basins 1 to 10) is 2.97 square miles. The KM card was left over from a previous watershed analyses. These analyses did not include Drainage Basin 10. Furthermore, the KM card does not effect the calculations. However, the KM card has been removed from all the HEC-1 runs in the revised report.**

*14 Appendix F 100-Year Storm Event, Post-Project Condition Page 1, line 24, has "2 8" circled with "2 97? (typ )" written next to it*

**Response: The total watershed (Basins 1 to 10) is 2.97 square miles. The KM card was left over from a previous watershed analyses. These analyses did not include Drainage Basin 10. Furthermore, the KM card does not effect the calculations. However, the KM card has been removed from all the HEC-1 runs in the revised report.**

*15 Appendix F 100-Year Storm Event, Post-Project Condition Page 2, line 59 through 64 is circled with "delineate/pls exhibit location of detention features on Composite Site Plan (typ )" written next to it*

**Response: Please see the locations of the detention basins labeled on the Composite Site Plan located in Map Pocket 1. The detailed volume calculations were performed on a computer program called "PondPack" based on the current topographic conditions and proposed grading as shown on the Composite Site Plan. Please refer to Appendix B (Post Project) for detailed volume calculations for Detention Basin 1 and 2.**

*16 Appendix F 100-Year Storm Event, Post-Project Condition Page 3, line 124 through 129 is circled with "pls delineate on Composite Site Plan (typ )" written next to it*

**Response: Please see the locations of the detention basins labeled on the Composite Site Plan located in Map Pocket 1. The detailed volume calculations were performed on a computer program called "PondPack" based on the current topographic conditions and proposed grading as shown on the Composite Site Plan. Please refer to Appendix B (Post Project) for detailed volume calculations for Detention Basin 1 and 2.**

*17 Map Pocket 1 On the map there are 2 comments circled, one says "pls label detention basin 2" and the other says "pls label detention basin 1"*

**Response: The Composite Site Plan has been revised and as a result Detention Basin 1 and 2 are now labeled.**

## TABLE OF CONTENTS


| | |
|---|---|
| Introduction | 1 |
| Vicinity Map | 4 |
| Hydrologic Methodology and Criteria | 5 |
| Hydrologic and Detention Basin Design Results | 7 |
| Hydraulic Analysis Methodology and Criteria | 13 |
| Hydraulic Analysis Results | 15 |
| Conclusion | 19 |
| Declaration of Responsible Charge | 20 |


**Tables:**


Table 1 Summary of HEC-1 Results for the 2-, 10-, and 100-Year Pre- and Post-Project Peak Discharge Rates For Harmony Grove Village

Table 2 Summary of 100-Year Discharge Rates for the Eden Valley Creek Watershed

Table 3 Summary of 100-Year Water Surface Elevations for Current and Post-Project Conditions


**Appendices:**


Appendix A Workmaps for NRCS (HEC-1) Flood Hydrograph Analyses

Appendix B Support Material for NRCS (HEC-1) Flood Hydrograph Analyses

Appendix C Isopluvial Maps

Appendix D 2-Year HEC-1 Analyses for the Pre- and Post-Project Conditions

Appendix E 10-Year HEC-1 Analyses for the Pre- and Post-Project Conditions

Appendix F 100-Year HEC-1 Analyses for the Pre- and Post-Project Conditions

Appendix G Support Material for the Hydraulic Analyses (HEC-2) analyses

Appendix H 100-Year HEC-2 Analyses for the Pre- and Post-Project Conditions

**Map Pockets:**

| | |
|---|---|
| Map Pocket 1 | Composite Site Plan |
| Map Pocket 2 | Harmony Grove Village HEC-1 Workmap (1000 Scale USGS Exhibit) |
| Map Pocket 3 | Harmony Grove Village HEC-2 Analysis Escondido Creek Current Conditions (2 Sheets) |
| Map Pocket 4 | Harmony Grove Village HEC-2 Analysis Escondido Creek Post-Project Conditions (2 Sheets) |

# INTRODUCTION

This drainage report is for the tentative map for the Harmony Grove Village project The owners of the project are New Urban West Management, LLC The project site is located within the County of San Diego, adjacent to Escondido Creek and approximately 2 miles west of the Interstate 15 The project site is located within the County of San Diego The project is bound by Wilgen Road on the west and Country Club Drive on the east The project is intersected by Harmony Grove Road and Escondido Creek The project location is shown on Figure 1 1, Vicinity Map, located at the end of this section The project proposes to develop an existing rural area into a mixed-use project combining single-family residential, commercial, public facility (fire station, wastewater treatment plant, and village hall), and open /recreation (park, trail, equestrian, and recreational facilities) areas The project site area is approximately 475 acres

In the pre-project condition the Harmony Grove Village project is at the southern, downstream portion of the Eden Valley Creek watershed It is comprised of gently rolling hills and scattered vegetation with two egg ranches, a dairy, avocado groves, citrus groves, an abandoned rock quarry, and low density single family homes In the pre-project condition the site generally drains towards Eden Valley Creek and is conveyed in a southerly direction It then confluences with Escondido Creek, just south of Harmony Grove Road and west of Country Club Drive

In the post-project condition, portions of Eden Valley Creek and the local tributaries (within the Harmony Grove Village project boundary), shall be developed into natural lined channels A series of drop structures (to be designed during the Final Design stage) shall be installed in the downstream portion of Eden Valley Creek The proposed site shall be served by a series of on-site storm drain systems and drainage swales In addition, two detention basins are proposed to detain the 2- and 10- and 100-year post-project storm events Detention basin 1 is located at the northeast portion of the project, and Detention Basin 2 is located in the southwest portion of the project Refer to Map Pocket 1 for a copy of the Composite Site Map, for the locations of the above-described improvements

A total of 706 units consisting of single-family homes are proposed for this project In addition, office/retail areas are proposed in which there will be additional apartment/condominium type homes on the second floor Public facilities such as a fire station, wastewater treatment plant, and a village hall are also proposed for this development There will also be open/recreational areas located on-site that shall be comprised of parks, trails, equestrian and recreational facilities The equestrian area is located just south of Escondido Creek and west of Country Club Drive (Basins 1100 and 1200)

A Storm Water Management Plan & Storm Water Maintenance Plan (SWMP) has also been prepared for the project titled, *Storm Water Management Plan & Storm Water Maintenance Plan (SWMP) for Harmony Grove Village Tentative Map*, prepared by Rick Engineering Company, dated October 8, 2004 (Rick Engineering Company Job Number 14312-B) The SWMP describes the site design BMPs, as well as source control and treatment control BMPs that will be utilized to address water quality for the project

The NRCS hydrologic method as stated in the June 2003 County of San Diego Hydrology Manual, should be used for study areas approximately 1 square mile and greater in size Prior to June 2003, the rainfall intensity for the watershed was based on a "Type B" rain fall distribution However, the new 24-hour nested storm with the 2/3, 1/3 distributions supercedes the old Type B rainfall distribution (The rainfall distribution adopted the nested storm pattern, based on the United States Army Corps of Engineers (USACE), Hydrologic Engineering Center (HEC) Training Document Number 15) The NRCS's rainfall distribution is based on the Rational Method's 6-hour intensity-duration relationship and as a result, the NRCS method now closely mimics the results of the Rational Method Therefore, it is appropriate to use the NRCS Hydrologic method to assess the impacts that the proposed project has on the watershed for CEQA purposes and determine a flow rate for the proposed channelized portion of Eden Valley Creek Upon submittal of the Tentative Map, Rational Method analysis shall be prepared to model the on-site storm drain systems for watersheds less than 1 square mile

This report presents 100-year HEC-2 hydraulic analyses for the Escondido creek that models the current topographic condition and the proposed bridge The Current Condition analysis models the existing configuration of Escondido Creek The proposed bridge alternative models the grading associated with the equestrian areas (downstream of Country Club Road) and a proposed bridge crossing (and associated grading) at Village Road In addition, pre-project and post-project peak discharge rates for 2-, 10-, and 100-year storm events and appropriate volumes for the detention basins have been determined and are included in this report

**Figure 1.1 Vicinity Map**
Source The Thomas Guide San Diego County (2003), page 1129

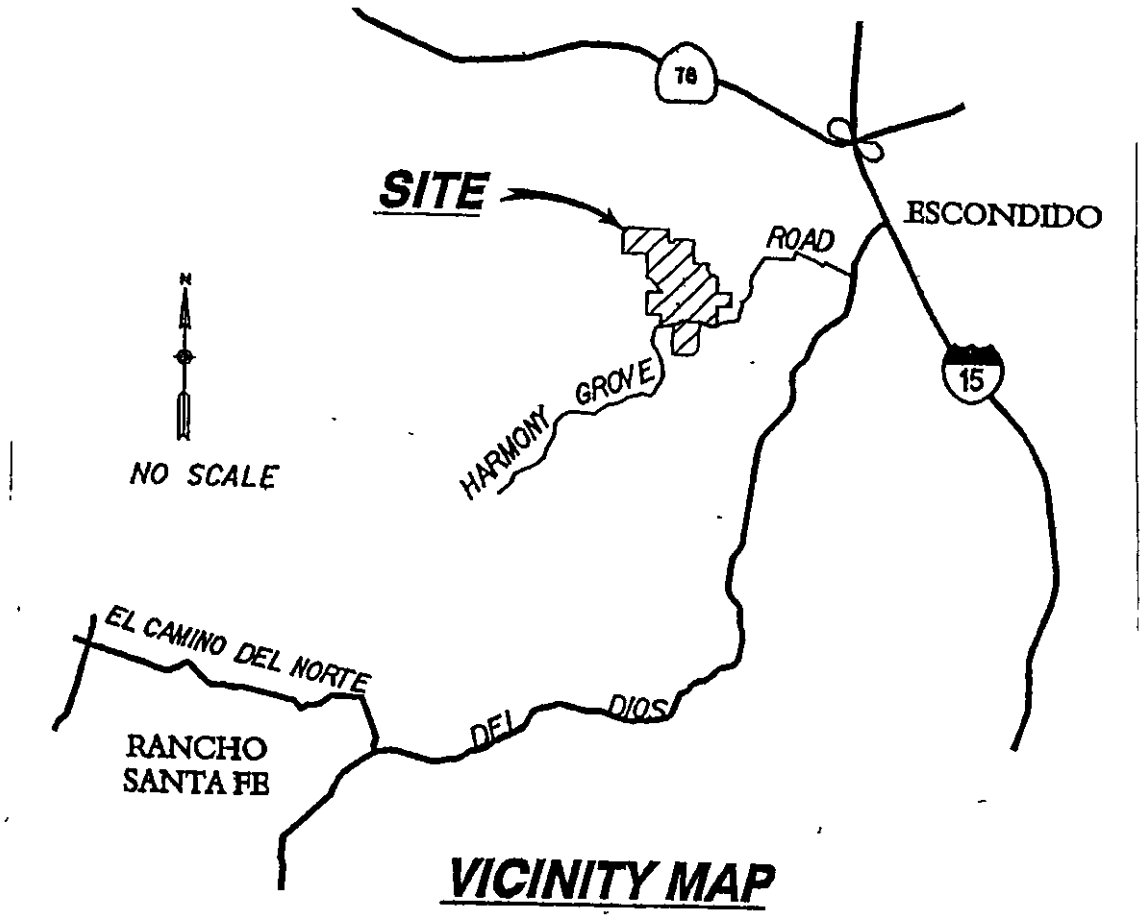

## HYDROLOGIC METHODOLOGY AND CRITERIA

The total watershed tributary to the Harmony Grove Village project is approximately 3 square miles The June 2003 *San Diego County Hydrology Manual* requires the Natural Resources Conservation Service (NRCS) hydrologic method be used for watersheds that are approximately one square mile and greater in size The NRCS hydrologic method was used to determine the 2-, 10-, and 100-year pre-project and post-project peak discharge rates for the project watershed

The NRCS hydrologic method as stated in the June 2003 County of San Diego Hydrology Manual, should be used for study areas approximately 1 square mile and greater in size Prior to June 2003, the rainfall intensity for the watershed was based on a "Type B" rain fall distribution However, the new 24-hour nested storm with the 2/3, 1/3 distributions supercedes the old Type B rainfall distribution (The rainfall distribution adopted the nested storm pattern, based on the United States Army Corps of Engineers (USACE), Hydrologic Engineering Center (HEC) Training Document Number 15) The NRCS's rainfall distribution is based on the Rational Method's 6-hour intensity-duration relationship and as a result, the NRCS method now closely mimics the results of the Rational Method Therefore, it is appropriate to use the NRCS Hydrologic method to assess the impacts that the proposed project has on the watershed for CEQA purposes and determine a flow rate for the proposed channelized portion of Eden Valley Creek Upon submittal of the Tentative Map, Rational Method analysis shall be prepared to model the on-site storm drain systems for watersheds less than 1 square mile

### NRCS (HEC-1) Flood Hydrograph Methodology and Criteria

The US Army Corps of Engineers HEC-1 computer program was used to determine the 2-, 10-, and 100-year peak discharge flow rates for both the pre-and post-project conditions The HEC-1 program allows the engineer to simulate both natural and improved or developed watersheds Program parameter include basin area, lag time, rainfall distribution , and infiltration rates These parameters were determined from soil and vegetative cover/land use maps, and USGS topographic maps Refer to Appendix A for the corresponding workmaps .

Rainfall rates and distributions were developed using the criteria, as outlined in the June 2003 *San Diego County Hydrology Manual* The NRCS Synthetic unit hydrograph with curvilinear transformation was used to develop runoff hydrographs for the watershed This unit hydrograph is dimensionless and is a function of the watershed area and lag time Lag time for the watershed was calculated using criteria presented in the Hydrology Manual

Runoff was estimated using NRCS curve numbers for the watershed Estimated curve numbers are a function of land use or vegetative cover and soil type The land uses were based on the County of San Diego land use and vegetative cover maps and the Harmony Grove Village Tentative Map Soil types were obtained from the Soil Conservation Service (SCS) soil survey for San Diego County Curve numbers were then calculated using the method as outlined in the San Diego County Hydrology Manual The 2-, 10-, and 100-year analyses were analyzed for the pre- and post-project conditions The areas upstream of Harmony Grove Village were modeled identical for both conditions, ultimate land use Only the land uses for the Harmony Grove Village project changed from the pre to post-project condition analyses By doing this, the HEC-1 analyses determines the impact that the proposed project may have on the watershed Refer to Appendix A and B for the corresponding workmaps and supporting materials, respectively In addition, located in Appendix D, E, and F are the 2-, 10-, and 100-year storm event for the pre- and post-project condition HEC-1 analyses

## HYDROLOGIC AND DETENTION BASIN DESIGN RESULTS

### NRCS (HEC-1) Flood Hydrograph Results

The HEC-1 program was used to model the 2-, 10, and 100-year pre- and post-project condition peak discharge rates for the Harmony Grove Village The upstream portion of the watershed was modeled for ultimate land use conditions for both the pre- and post-project condition The drainage basins that experienced changes were ones that lied within the project boundary (i e on-site) Refer to workmap titled, *Harmony Grove Village HEC-1 Workmap,* located in Appendix A, for drainage basin locations In addition, located in Appendix B is the backup information that was used for the HEC-1 analyses

For the drainage basins located outside of the Harmony Grove Village property line, ultimate land uses were used for both the pre- and post-project analyses For the drainage basins located inside the Harmony Grove Village property line for the pre-project condition existing land uses were used for the analyses For the drainage basins located inside the Harmony Grove Village property line for the post-project condition ultimate land uses were used for the analyses The following text describes the drainage basins in more detail

Drainage basin 1 is located in the northeast section of the watershed and is approximately 828 acres The pre- and post-project land uses are primarily low density residential The post-project condition land uses will change slightly due to the fact that a small portion of this drainage basin, located at the downstream portion, is within the Harmony Grove Village property boundary Drainage basin 1 is composed mainly of type B soil Detention Basin 1 will be located at the downstream end of this drainage basin and will mitigate for the 2-, 10-, and 100-year storm events Detention Basin 1 is shown on the exhibit titled, *Composite Site Plan*, located in Map Pocket 1

Located immediately downstream of drainage basin 1 is drainage basin 2 Drainage basin 2 is approximately 177 acres In the pre-project condition the land uses are comprised of heavy

industrial and agricultural Drainage basin 2 lies completely within the project boundary and therefore the land uses will change significantly between the pre- and post-project conditions In the post-project condition the land use will range from single family residential to multi family (high density) residential Drainage basin 2 is primarily Type D soil

Drainage basin 3 is located in the northwest corner of the watershed and is approximately 125 acres The pre-project condition land uses are comprised of open space with low density residential This drainage basin lies outside of the project boundary and therefore the pre-project and post-project conditions will remain the same Drainage basin 3 is composed of type B and D soil

Located immediately downstream of drainage basin 3 is drainage basin 4 Drainage basin 4 is approximately 113 acres In the pre-project condition, land uses are primarily agriculture In post-project conditions, the land uses will range from open space to single- and multi-family residential Drainage basin 4 is composed of type B, C, and D soil.

Drainage basin 5 is located along the western portion of the watershed and confluences, on-site, with drainage basins 3 and 4 Drainage basin 5 is approximately 121 acres The pre-project condition land use is Narrow Leaf Chaparral, annual grass, and low density residential The post-project condition land uses will change slightly due to the fact that a small portion of this drainage basin, located at the downstream portion, is within the Harmony Grove Village project boundary Drainage basin 5 is composed of type D soil

Drainage basin 6 is located immediately downstream of the confluence of drainage basins 3, 4, and 5 and is centrally located in the watershed Drainage basin 6 is approximately 37 acres The pre-project condition land use is mainly agricultural Drainage basin 6 lies completely within the project boundary and therefore the land uses will change significantly between the pre- and post-project conditions In the post-project condition the land use will range from open space to single family residential Drainage basin 6 is composed of Type C soil

Drainage basin 7 is located in the southwest portion of the watershed and is approximately 356 acres in size The pre-project condition land use is primarily low density residential The post-project condition land uses will change slightly due to the fact that a small portion of this drainage basin, located at the downstream portion, is within the Harmony Grove Village project boundary Drainage basin 7 is composed of Type D soil. Detention Basin 2 will be located at the downstream portion of this basin and will mitigate for the 2-, 10-, and 100-year storm events Detention Basin 2 is shown on the exhibit titled, *Composite Site Plan*, located in Map Pocket 1

Located immediately downstream of drainage basin 7 is drainage basin 8 Drainage basin 8 is approximately 29 acres In the pre-project condition, land uses primarily consist of agriculture In post-project conditions, the land uses will consist of single family residential Drainage basin 8 is composed of both Types D soil

Drainage basin 9 is located at the downstream portion of the watershed, just before the confluence with Escondido Creek Drainage basin 9 is approximately 29 acres In the pre-project condition, land uses consists of heavy industry and agriculture In post-project conditions, the land uses range from single- to multi-family residential Drainage basin 9 is composed of type D soil

Drainage basin 10 is located south of Escondido Creek and drains in a northerly direction to the confluence with Escondido Creek and drainage basin 9 Drainage basin 10 is approximately 86 acres In the pre-project condition, land use consists of pasture and low density residential In the post project condition land use consist of equestrian and low density residential

The two detention basins associated with Harmony Grove Village contain a volume that allows for the detention of the 2-, 10-, and 100-year storm events Detention Basin 1 has a volume of 6 6 acre-foot, with 2 to 1 side slopes and graded to drain at a ½ percent Detention Basin 2 has a volume of 8 1 acre-foot, with 2 to 1 side slopes and graded to drain at a ½ percent Detention Basin 1 is located at the northerly portion of the project, and Detention Basin 2 is located in the

southwestern portion of the project Please refer to Map Pocket 1 for the locations of the detention basins and Appendix B for detailed volume calculations (PondPack)

It has been determined that there is an existing downstream condition of concern associated with Escondido Creek, and per the County SUSMP 2- and 10-year detention is required The detention basins are not designed to meet the numeric sizing criteria per the County SUSMP (In other words, they are not designed to treat the water) However, incidental water quality benefits will occur Maintenance of these basins is necessary to ensure that these structures function for the life of this project

The detention basin will be designed to attenuate the 2-, 10-, and 100-year storm event for the post-project condition so that the maximum allowable release rate after development shall not exceed the pre-project condition flow rates

The detention basins have been analyzed for the 2-, 10-, and 100- year storm events The 100-year analysis was performed to determine the adverse impacts with respect to flood control The 2- and 10-year storm event analyses were performed to determine the adverse impacts associated with the downstream conditions of concern (scour and erosion). These hydrologic analyses were used to design the detention basins that will detain the post-project runoff to pre-project conditions and prevent adverse impacts associated with flood control and the conditions of concern The two proposed detention basins are located on the north side of Escondido Creek There are no proposed detention basins associated with the portion of the project south of Escondido Creek, however, the detention basins located on the north side are over detaining runoff to mitigate for the south side

See Table 1 for a summary of the peak discharges at the downstream portion of the watershed (Eden Valley Creek and Escondido Creek confluence) for the 2-, 10-, and 100-year storm events, respectively For a copy of the HEC-1 output, refer to Appendix D, E, and F

**Table 1**
**Summary of HEC-1 Results for the 2-, 10-, and 100-Year**
**Pre- and Post-Project Peak Discharge Rates**
**For**
**Harmony Grove Village**

| | 2-Year Storm Event (cfs) | 10-Year Storm Event (cfs) | 100-Year Storm Event (cfs) |
|---|---|---|---|
| Pre-Project North | 861 | 1,674 | 3,724 |
| Post-Project North (Detained Flows) | 841 | 1,405 | 3,196 |
| Pre-Project South | 89 | 154 | 300 |
| Post-Project South (Not Detained) | 134 | 203 | 343 |
| Pre-Project Combined North and South | 942 | 1,812 | 3,991 |
| Post-Project Combined North and South | 931 | 1,543 | 3,468 |

cfs = cubic feet per second
North = Basins 1 to 9 (North of Escondido Creek)
South = Basin 10 (South of Escondido Creek)
Combined = Basins 1 to 10
Post-Project combined North and South includes detention

Rick Engineering Company prepared a report on February 10, 1995 titled, *Eden Valley Third Submittal Hydrology and Hydraulic Studies,* that analyzed the Eden Valley Creek watershed The report determined the peak flowrate of 2,228 cfs attributed from 2 86 square miles The 2 86 square miles is the Eden Valley Creek watershed immediately before it confluence with Escondido Creek The methodology used to analyze the watershed was from the County of San Diego Hydrology Manual titled, *County of San Diego Department of Public Works Flood Control Division Hydrology Manual,* revised in 1985 However, a new 2003 *Hydrology Manual*

has been adopted and as a result this new methodology was used for the hydrologic analyses associated with Harmony Grove Village Please refer to Table 2 for the comparisons of flowrates from the old and new methodologies

**Table 2:**
**Summary of 100-Year Discharge Rates for the Eden Valley Creek Watershed**

| Drainage Basin | Area (Square Miles) | 100-Year Flowrate (cfs) | Flowrate/Area (cfs/acre) |
|---|---|---|---|
| New Methodology (Basin 1 to 9) | 2 84 | 3,196 | 1 8 |
| Old Methodology | 2 86 | 2,228 | 1 2 |

## HYDRAULIC ANALYSIS METHODOLOGY & CRITERIA

A hydraulic study of the Escondido Creek was performed using the U S Army Corps of Engineers (USACOE) HEC-2 computer program The HEC-2 program is a hydraulic model capable of calculating water surface profiles for steady gradually varied flow in natural or man-made channels This program is also capable of calculating sub-critical and super-critical flow profiles The effects of various obstructions such as bridges, culverts, weirs, and structures in the floodplain may be considered in the computations The computational procedure is based on the solution of the one-dimensional energy equation with energy loss due to friction evaluated with Manning's equation The computational procedure is generally known as the standard step method The program is also designed for application in floodplain management and flood insurance studies to evaluate floodway encroachments Also, capabilities are available for assessing the effects of channel improvements and levees on water surface profiles Input and output may be either English or metric units

The 100-year flow rate was determined to be 19,000 cubic feet per second (cfs) The starting water surface elevation was determined to be 559 0 feet The flow and starting water surface elevations were obtained from the June 19th, 1997 FEMA document titled, "*Flood Insurance Study Report (FIS)*" for San Diego County In addition, historic HEC-2 analyses were obtained from the County of San Diego that corresponded to the FIS information The Harmony Grove Village project is proposing detention for the 100-year storm event The detention basins are attenuating post-project flows to pre-project conditions Therefore the 19,000 cfs will be used for pre- and post-project HEC-2 analyses of Escondido Creek

At Country Club Drive, (cross sections 1225 and 1250) the model utilizes a flow of 18,740 cfs Country Club Drive is a dip crossing that has a double box culvert that conveys low flows According to a historic HEC-2 model obtained from the County of San Diego, this culvert crossing conveys a flow of 260 cfs As-built plans for this culvert were not available for this crossing/dip section Therefore, the HEC-2 analyses model the change in flow rate (due to the crossing) To accomplish this, the analyses model the upstream face, top of road, and

downstream face of the dip section (Country Club Drive) This flow change was modeled at cross sections 1225 and 1250 Upstream and downstream of this culvert, the study continues to model a flow of 19,000 cfs. This flow rate information is used for all of the analyses included in this report

## HYDRAULIC ANALYSIS RESULTS

The two 100-year flood HEC-2 analyses were compiled for each of the conditions (Current Condition and Post-Project Condition) The analyses were prepared utilizing the cross sections that are displayed on the exhibits titled, *Harmony Grove Village Escondido Creek Current Conditions,* and *Harmony Grove Village Escondido Creek Post-Project Condition,* located in Map Pockets 3 and 4

### Current Condition

The Current Condition 100-year HEC-2 analysis models the topographic conditions of Escondido Creek from a point approximately 2,400 feet downstream of Country Club Drive to a point approximately 5,300 feet upstream of Country Club Drive Please see the exhibit titled, *Harmony Grove Village Escondido Creek Current Conditions,* located in Map Pocket 3 and the Current Condition HEC-2 output file located in Appendix H

### Post-Project Condition

The post-project condition 100-year HEC-2 models the grading conditions and improvements for the proposed equestrian area and proposed bridge crossing The post-project model extends from a point approximately 1,300 feet downstream to 5,000 feet upstream of Country Club Drive The proposed grading and improvements for the bridge crossing are modeled at approximately 2,950 feet upstream of Country Club Drive Cross sections 2600 through 2900 (improvements extend from approximately 600 feet south of the proposed Village Road to approximately 200 feet north of Village Road) reflect the changes for the bridge crossing improvements The proposed bridge modeled three piers (each pier has a 5 foot width) with 4 spans Please see the exhibit titled, *Harmony Grove Village Escondido Creek Post-Project Model,* located in Map Pocket 4 and the 100-year HEC-2 output file located in Appendix H

The resulting 100-year calculated water surface elevations (WSEL) from the HEC-2 analyses for the Current and the Post-Project Model have been tabulated and are displayed in Table 3

## Table 3

## Summary of 100-Year Water Surface Elevations for Current and Post-Project Conditions

| Cross Section Number | Current Condition Water Surface Elevation (feet) | Post-Project Condition Water Surface Elevation (feet) |
|---|---|---|
| 100 | 559 00 | 559 00 |
| 200 | 559 72 | 559 72 |
| 400 | 559 45 | 559 45 |
| 500 | 560 52 | 560 52 |
| 600 | 560 43 | 560 43 |
| 700 | 563 25 | 563 25 |
| Downstream Limits of Equestrian Area Grading | | |
| 800 | 563 63 | 563 63 |
| 900 | 564 18 | 564 25 |
| 990 | 564 25 | 564 41 |
| 1000 | 565 56 | N/A |
| 1001 | N/A | 565 51 |
| 1100 | 566 07 | 565 65 |
| 1150 | 568 23 | 566 93 |
| Upstream Limits of Equestrian Area Grading | | |
| 1175 | 568 85 | 568 61 |
| Downstream Face of Country Club Dr | | |
| 1200 | 568 71 | 568 47 |
| 1225 | 568 61 | 568 60 |
| 1250 | 569 74 | 569 74 |
| Upstream Face of Country Club Dr | | |
| 1300 | 570 32 | 570 32 |
| 1350 | 570 95 | 570 95 |
| 1400 | 572 75 | 572 75 |
| 1500 | 573 77 | 573 77 |
| 1600 | 578 29 | 578 29 |
| 1700 | 581 80 | 581 80 |

**Table 3 *(cont.)***

**Summary of 100-Year Water Surface Elevations**

**for Current and Post-Project Conditions**

| Cross Section Number | Current Condition Water Surface Elevation (feet) | Post-Project Condition Water Surface Elevation (feet) |
|---|---|---|
| 1800 | 582 36 | 582 36 |
| 1900 | 583 25 | 583 25 |
| 2000 | 585 32 | 585 32 |
| 2100 | 588 76 | 588 76 |
| 2200 | 594 02 | 594 02 |
| 2300 | 599 29 | 599 29 |
| 2400 | 604 10 | 604 10 |
| 2500 | 606 03 | 606 03 |
| Beginning of Improvements (grading) for Proposed Bridge | | |
| 2600 | 606 32 | 606 32 |
| 2700 | 606 47 | 606 47 |
| 2800 | 607 41 | 607 47 |
| Beginning of Improvements (road) associated with Bridge | | |
| 2830 | 607 69 | 607 73 |
| 2860 | 607 75 | 607 76 |
| Downstream Face of Proposed Bridge | | |
| 2890 | 607 84 | 607 83 |
| Upstream Face of Proposed Bridge | | |
| 2900 | 607 83 | 607 89 |
| 3000 | 607 95 | 608 02 |
| 3100 | 608 37 | 608 42 |
| 3200 | 608 29 | 608 33 |
| 3300 | 608 07 | 608 12 |
| 3400 | 609 27 | 609 31 |
| 3500 | 609 33 | 609 36 |
| 3600 | 609 34 | 609 37 |
| 3700 | 610 36 | 610 39 |
| 3800 | 610 88 | 610 91 |
| 4000 | 611 10 | 611 12 |

In conclusion, there are two locations, where post-project water surface elevations have changed from the pre-project condition as a result of the proposed project The first location that exhibits a change in water surface elevations is located at the downstream portion of the analyses and is bounded by the HEC-2 cross-sections 800 to cross-section 1225 (Country Club Road) This portion of the creek is adjacent to the proposed day use equestrian facility (to the north) and the proposed equestrian boarding facility (to the south) Throughout this lower reach, the water surface elevations for the post-project model are elevated and lowered when compared to the pre-project model The portions of the reach that exhibit a rise in water surface elevations (from 0 07 to 0 24 feet) in the post project model occur within the project vicinity Furthermore, any proposed insurable structures will be above the 100-year water surface elevation with the appropriate freeboard The portions of the creek that exhibit a lower water surface elevation when compared to the pre-project model is due to the proposed grading associated with the day use equestrian area This proposed grading is increasing the conveyance for this portion of the creek and thereby reducing water surface elevations (from 01 to 1 3 feet)

The second portion of Escondido Creek that exhibits a small change in water surface elevations is located at the proposed bridge and extends to the upstream portion of the HEC-2 model This portion is bounded by the HEC-2 cross-sections 2800 (approximately 180 feet downstream of the bridge) to cross-section 4000 The rise in water surface elevation range from 0 01 to 07.

## CONCLUSION

This study presents the drainage study for the Harmony Grove Village project located in the County of San Diego The project proposes to develop an existing rural area into a mixed-use project combining single-family residential, commercial, public facility (fire station, wastewater treatment plant, and village hall), and open /recreation (park, trail, equestrian, and recreational facilities) areas 2-, 10-, and 100-year HEC-1 analyses were performed for the pre and post project conditions In addition, on-site modified rational method calculations were performed for the post-project conditions Two detention basins are proposed for this project to detain the 2- and 10-year post-project condition flow-rates so that the maximum allowable release rate after development shall not exceed the pre-project condition flow rates The proposed project will not significantly alter drainage patterns on the site

The results of the hydraulic analyses show that the 100-year floodplains for the Current and Post-Project Condition are very similar in areas that do not propose improvements The analysis also shows that the Escondido Creek floodplain at proposed equestrian areas does not encroach onto Harmony Grove Road as it does in the Current Condition Our project, on site is detaining for the 100-year storm event The detention basins are attenuating post-project flows to pre-project conditions Therefore the 19,000 cfs will be used for pre- and post-project HEC-2 analyses of Escondido Creek

## DECLARATION OF RESPONSIBLE CHARGE

I hereby declare that I am the engineer of work for this project, that I have exercised responsible charge over the design of this drainage report as defined in Section 6703 of the Business and Professionals Code, and opine that the design is consistent with current standards I understand that the check of the drainage report by the County of San Diego is confined to a review only and does not relieve me as the engineer of work of any responsibilities for the project design

Dennis C Bowling, M.S.
R.C E. #32838
Exp. 06/06

# APPENDIX A

## Workmaps for NRCS (HEC-1) Flood Hydrograph Analyses

# Pre-Project

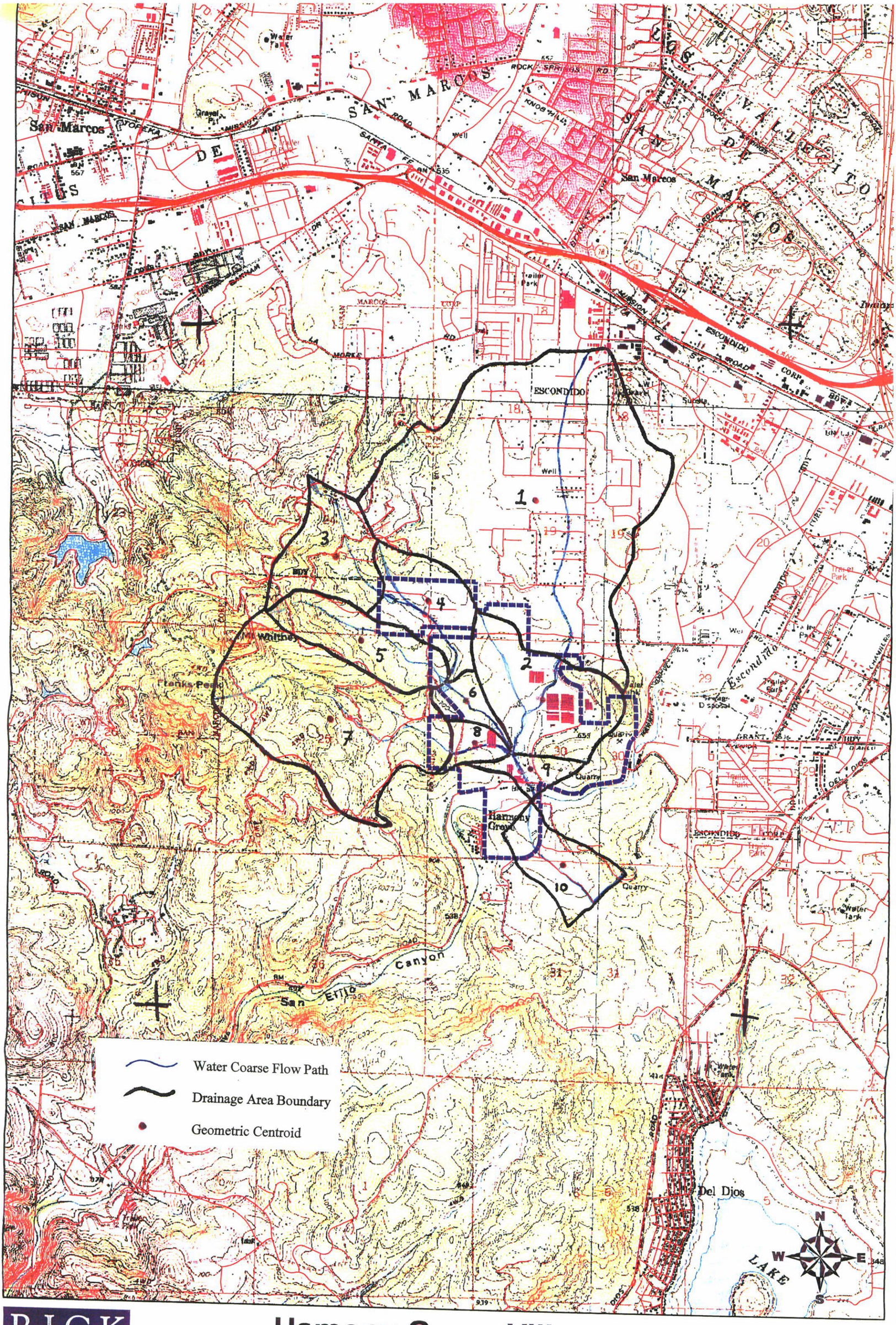


RICK ENGINEERING COMPANY

# Hamony Grove Village

## HEC-1 Workmap

0 1,000 2,000 4,000 Feet

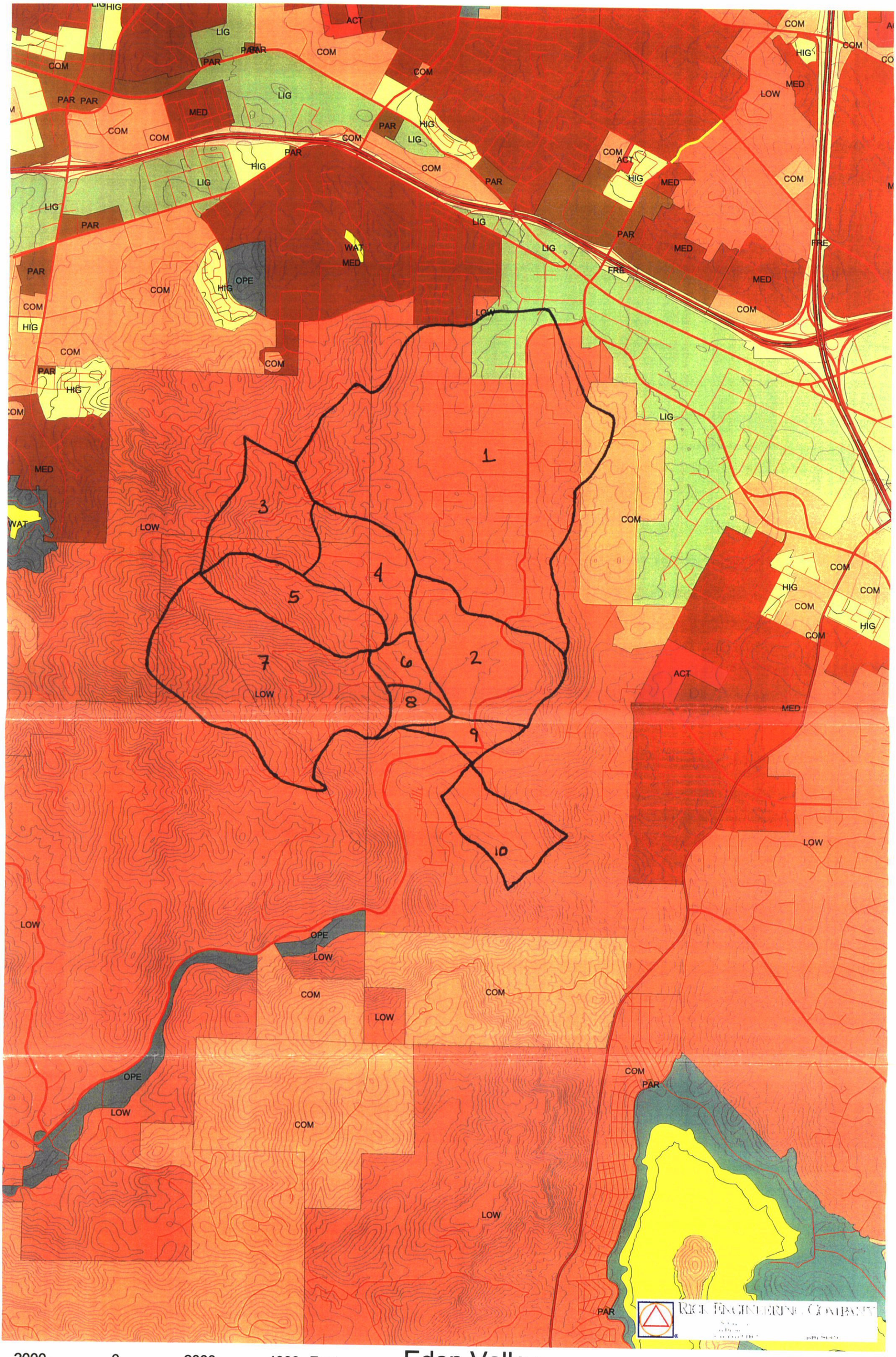


2000 0 2000 4000 Feet

# Eden Valley

Planned Land Use

JN14312 10/16/03
u:\d_14312\101603_BasemapProject\planned_landuse.apr

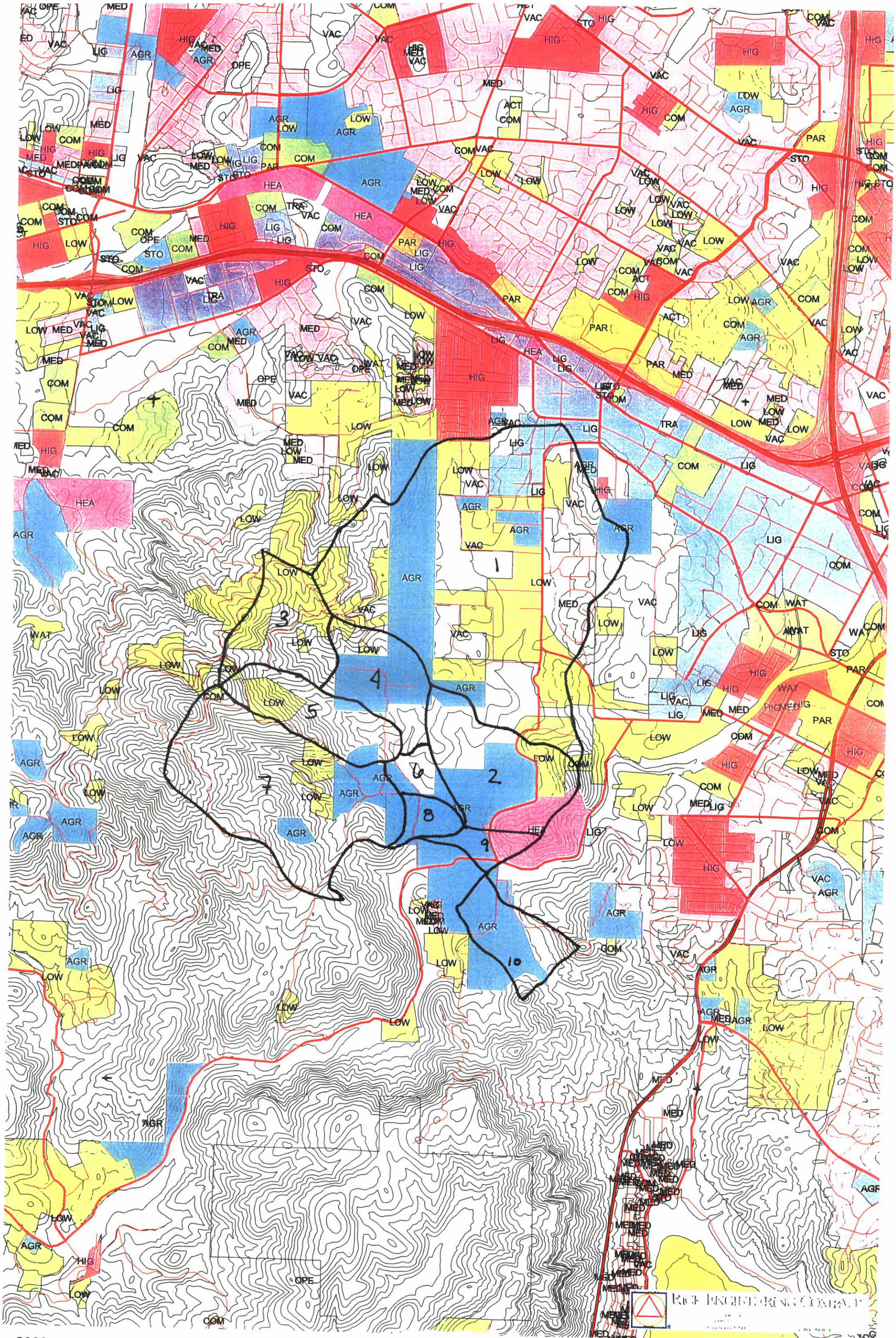


Existing Land Use

JN14312 10/16/03
u:\d_14312\101603_BasemapProject\lu_soils_roads.apr

11/22/05

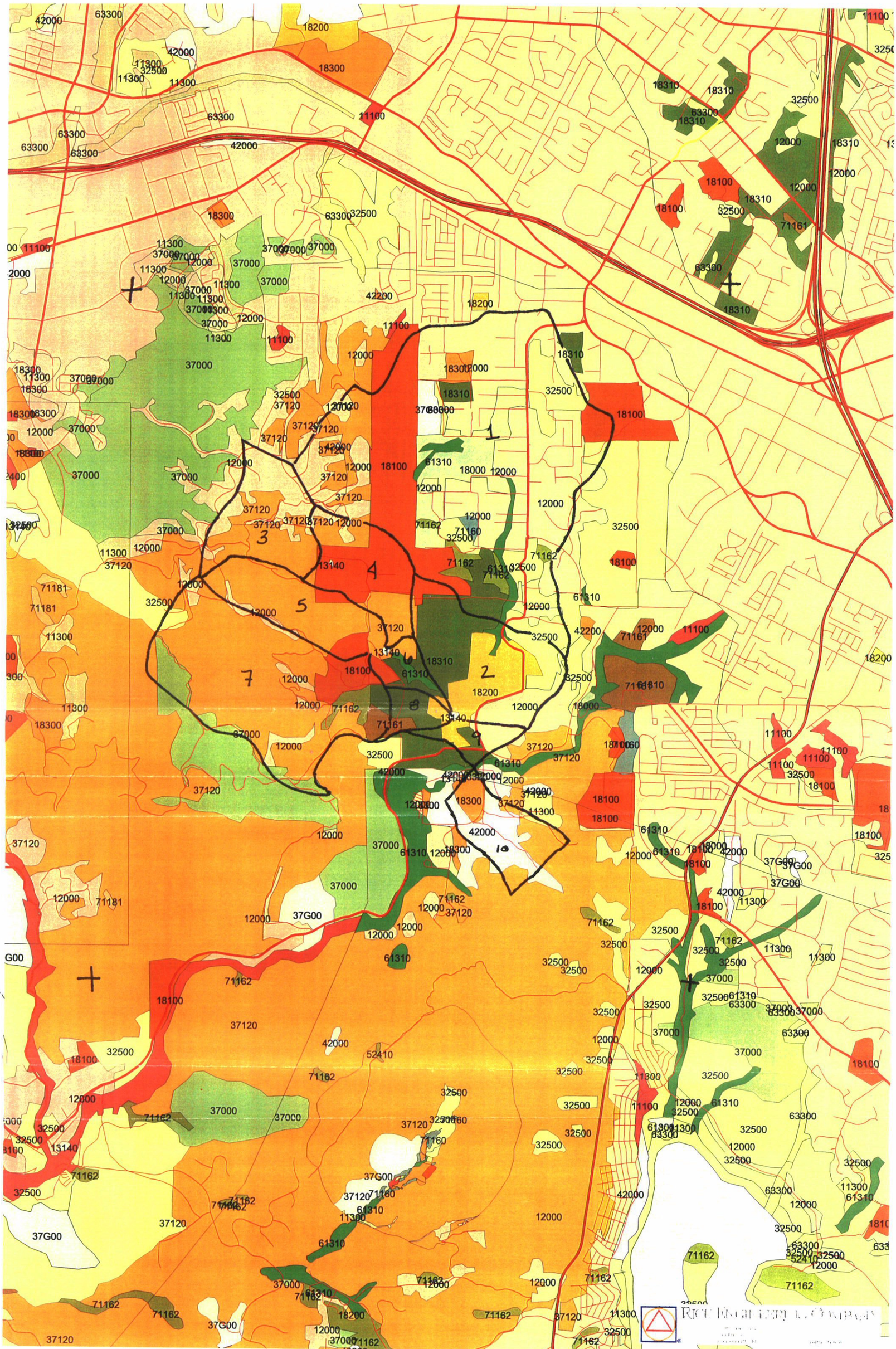


2000 0 2000 4000 Feet

# Eden Valley
Vegetative Cover

JN14312 10/16/03
u:\d_14312\101603_BasemapProject\vegetative_cover.ap

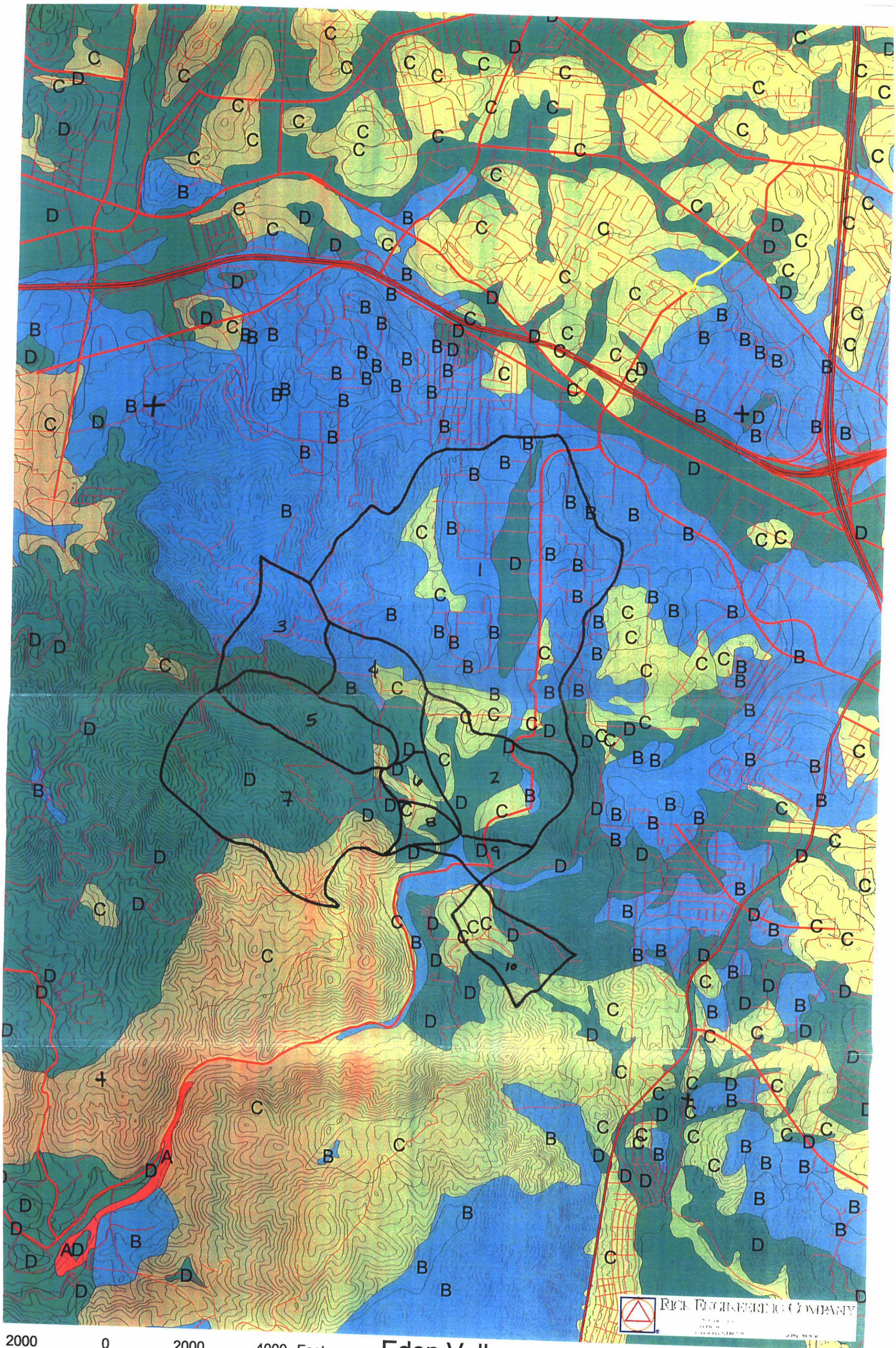


# Eden Valley

Hydrologic Soils Groups

JN14312 10/16/03
u:\d_14312\101603 BasemapProject\hydrologic soils ap

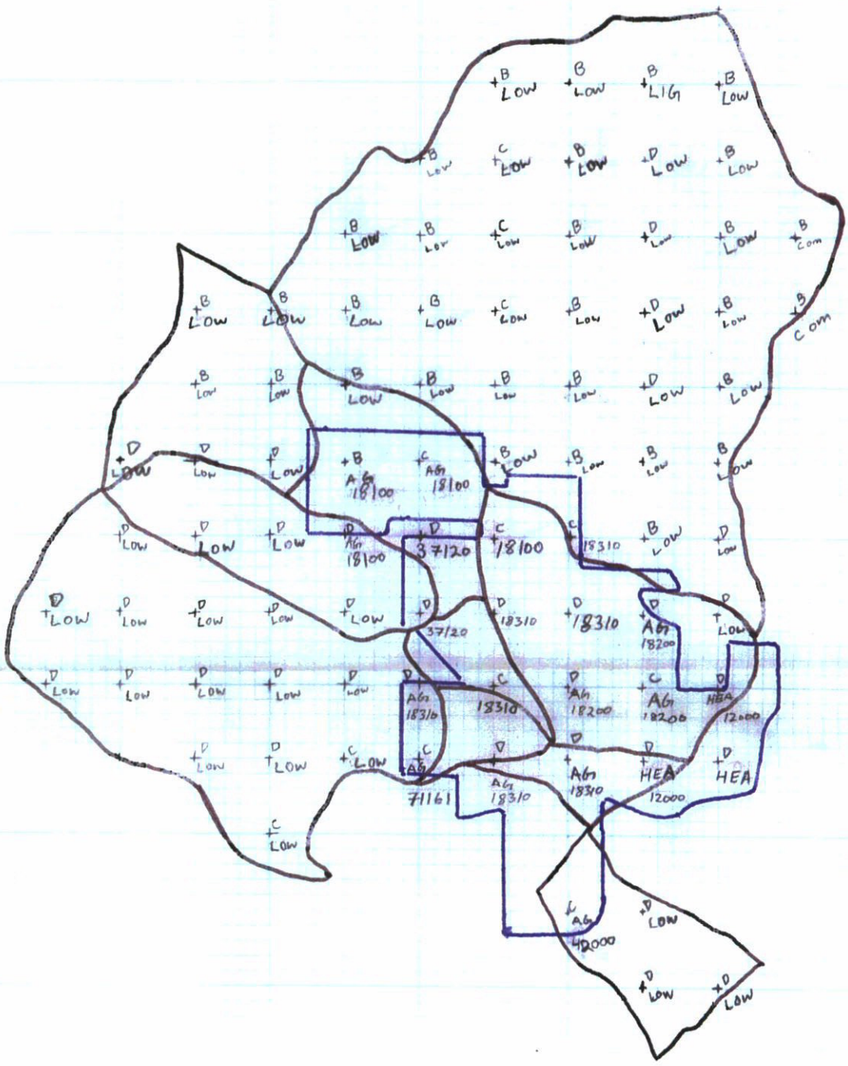

## Legend

B Soil
Low Land use / vegetative cover

~ Basin Boundary

~ Project Boundary

Soil
A Type A Soil
B Type B soil
C Type C soil
D Type D soil

↑ N

HARmony Grove Village
14312-B

Pre condition
1" = 2000'

11/22/05
HARmony Grove Vill
J-14312B
1" = 2000'

Harmony Grove Village
14312 B
11/29/05
PZN VALUE

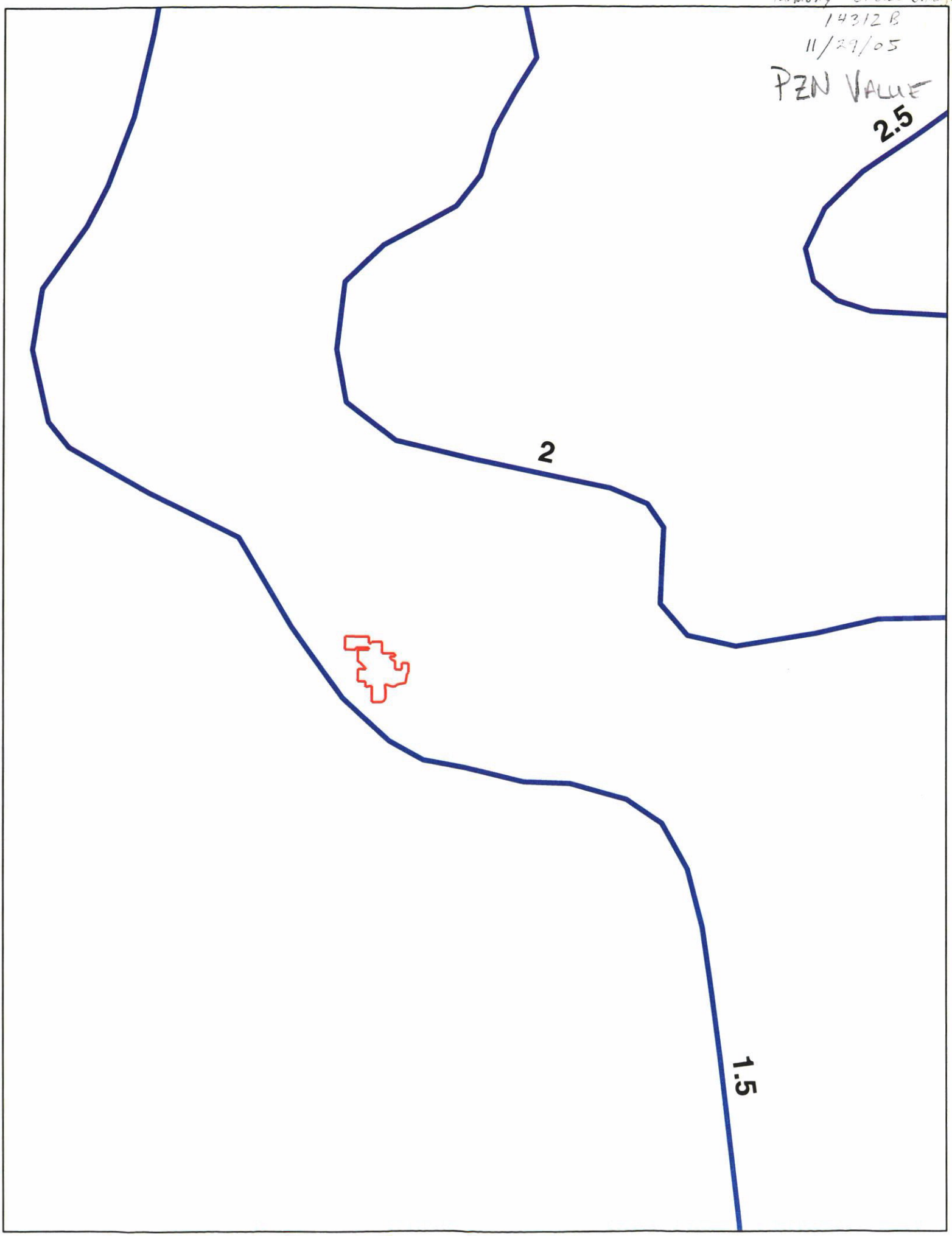

# Post-Project

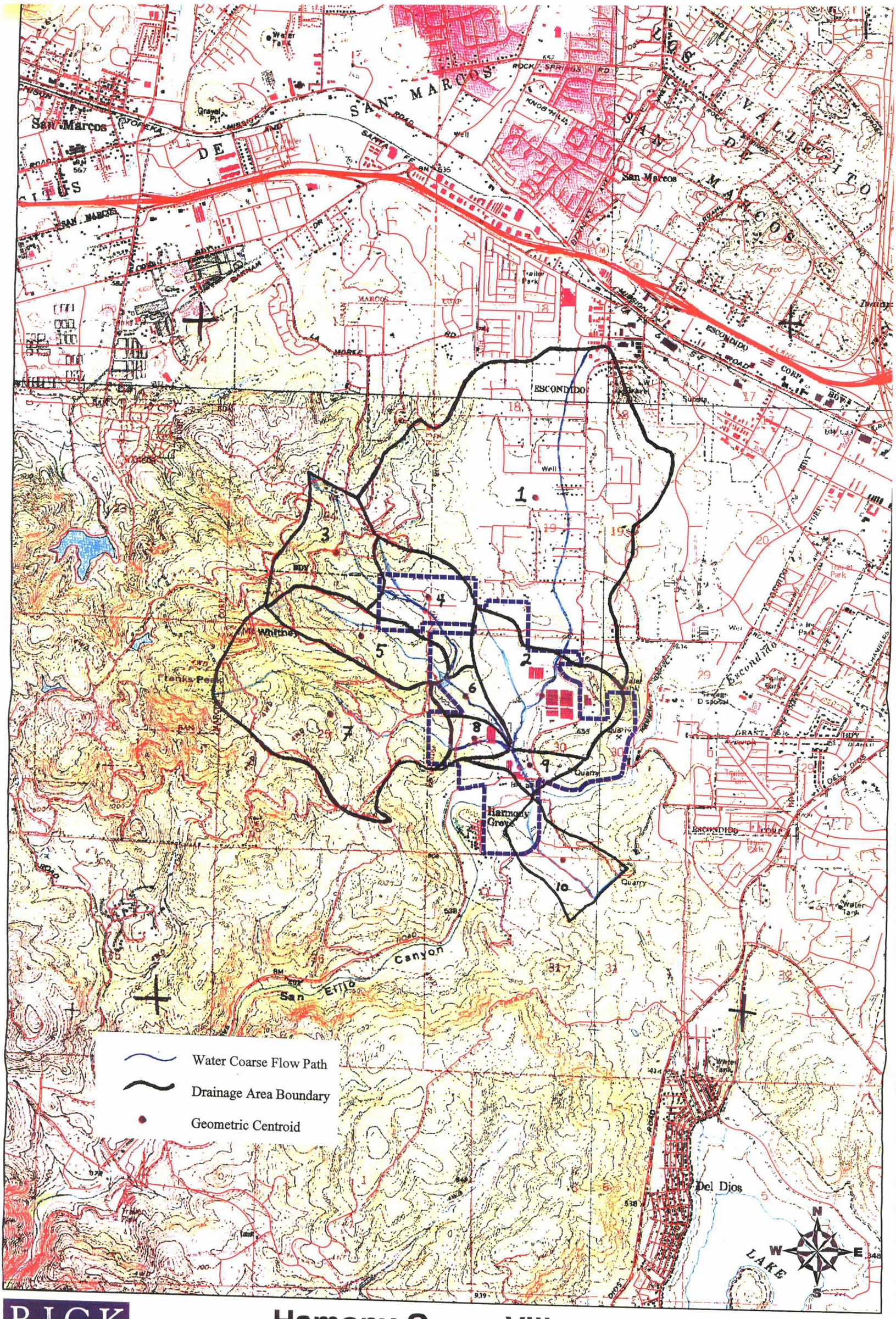


RICK ENGINEERING COMPANY

# Hamony Grove Village

## HEC-1 Workmap

0 1,000 2,000 4,000 Feet

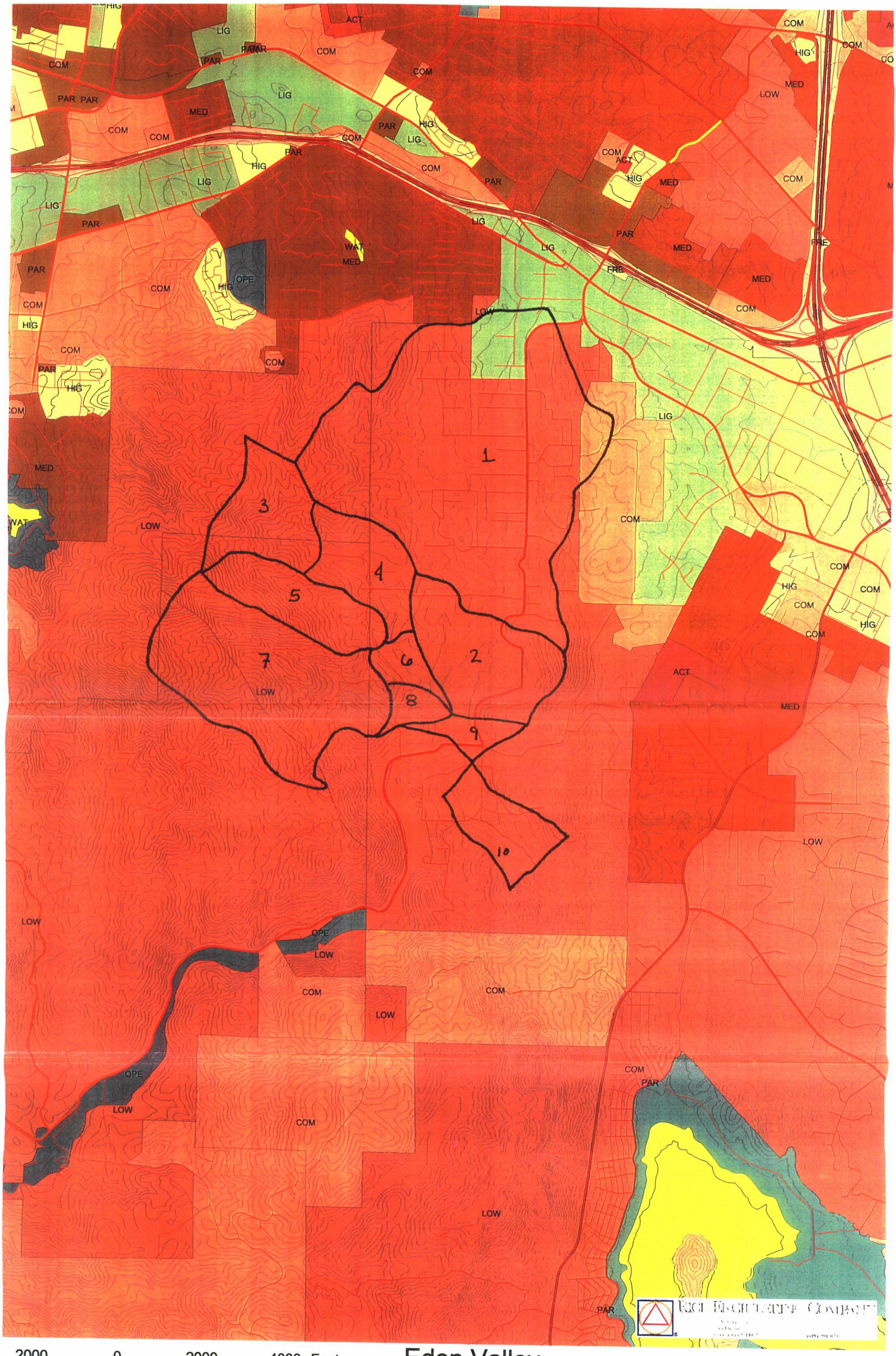


2000 0 2000 4000 Feet

# Eden Valley
Planned Land Use

JN14312 10/16/03
u:\d_14312\101603_BasemapProject\planned_landuse.apr

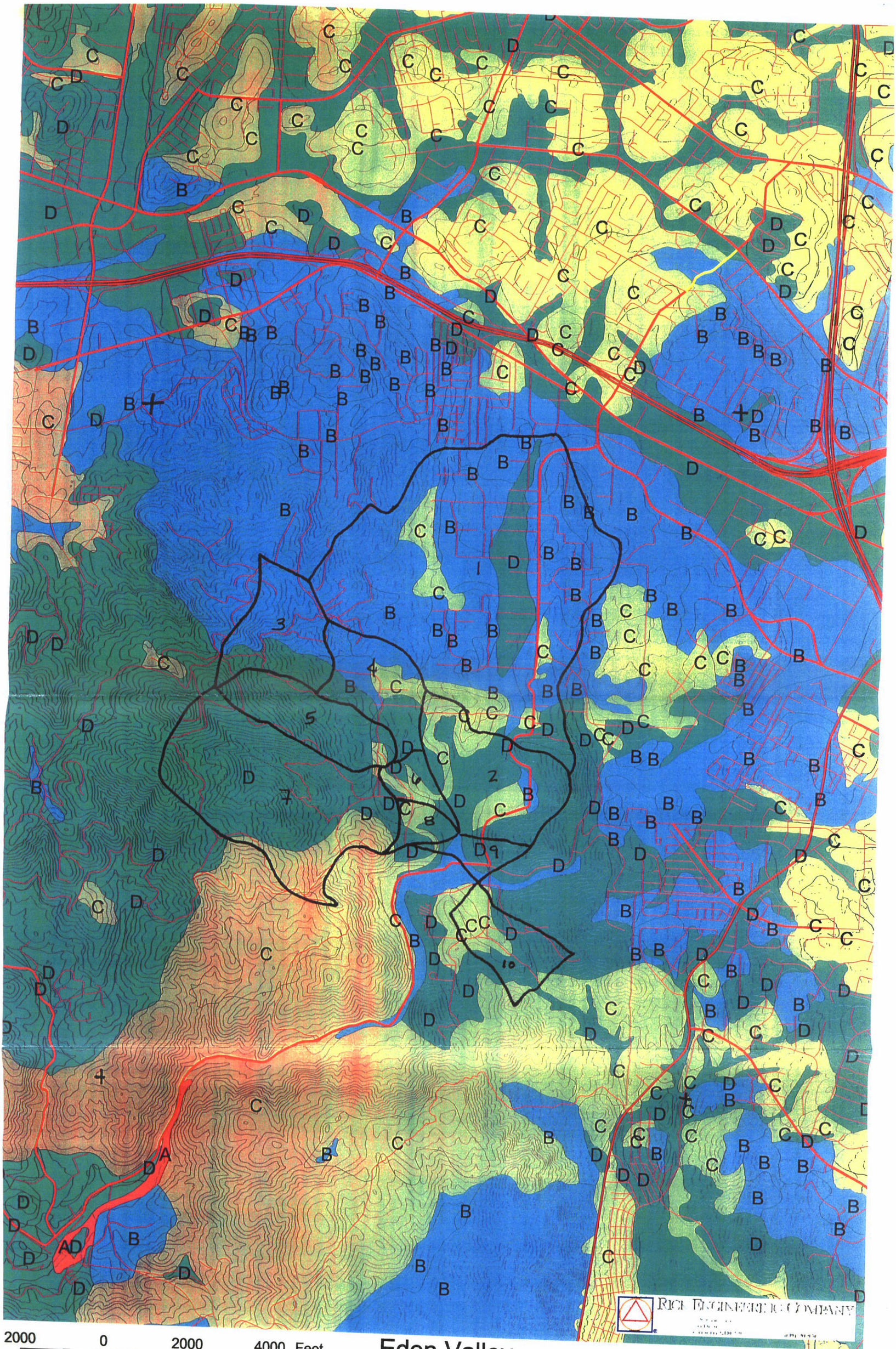


# Eden Valley

Hydrologic Soils Groups

JN14312 10/16/03
u:\d_14312\101603 BasemapProject\hydrologic soils ap

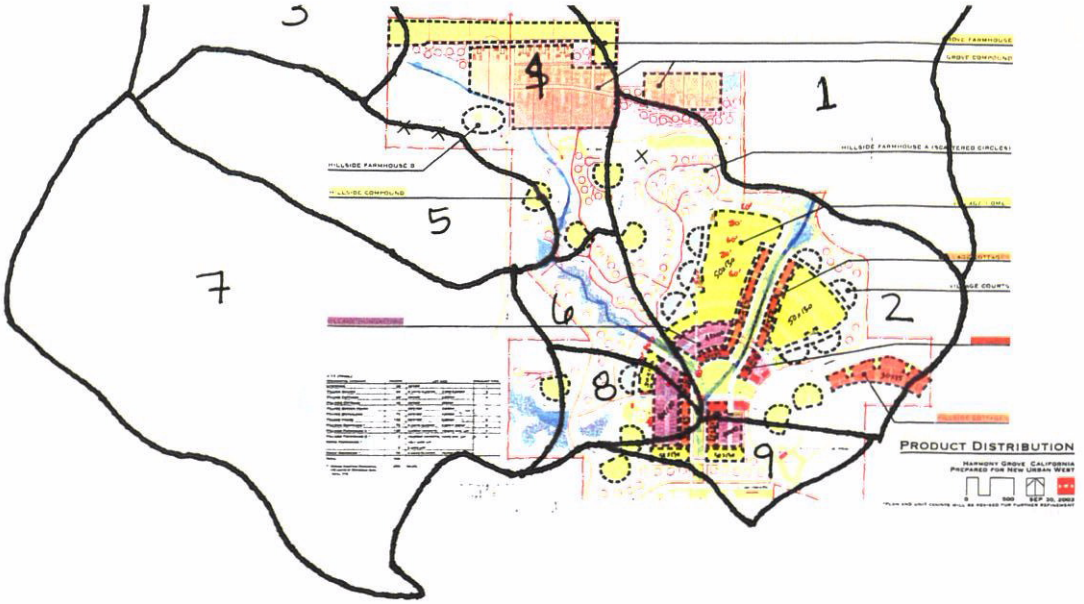


HARMONY GROVE VILLAGE
J-14312B
12/09/05

Proposed Land use

1"=2000'

Harmony Grove Village
14312B
December 5, 2005
Percent impervious assumptions:

Grove Farmhouse:
For the Grove Farmhouse product, the average lot size is specified as ½ acre The average pad footprint (impervious area) is 7,000 square feet. The street section titled "Hillside Residential (30 mph)" was used and specifies a 4 feet sidewalk, 4 feet parkway, and 16 feet street half width The lot drains towards a street frontage of approximately 390 feet.

Grove Compound
For the Grove Compound product, the average lot size is approximately 88 feet x 100 feet (the street frontage x the depth) The average pad footprint (impervious area) is 5,200 square feet The street section is titled "Hillside Residential (30 mph)" and specifies a 4 feet sidewalk, 4 feet parkway, and 16 feet street half width

Hillside Farmhouse A
For the Hillside Farmhouse A product, the average lot size is approximately 1/3 acre. The average pad footprint (impervious area) is 6,500 square feet The lot drains away from the street titled "Hillside Residential (30 mph)". Therefore the street will not be included in the Calculation

Hillside Farmhouse B
For the Hillside Farmhouse B product, the average lot size is approximately 1/3 acre The average pad footprint (impervious area) is 7,000 square feet The lot drains towards a super-elevated 30 foot access road (used full width to determine percent impervious )

Hillside Compound
For the Hillside Compound product, the average lot size in the cluster is approximately 6,500 square feet. The average pad footprint (impervious area) is 4,500 square feet The lot drains towards an access road with a half width of 20 feet Lot number 165 was used for approximating the lot street frontage

Hillside Cottages
For the Hillside Cottages product the average lot size is approximately 30 feet x 85 feet (the street frontage x the depth) The average pad footprint (impervious area) is 1,600 square feet The street drains towards access road with a 10 feet half width

Village Homes

For the Village Home product, the average lot size is approximately 50 feet x 130 feet (the street frontage x the depth). The average pad footprint (impervious area) is 4,400 square feet. The percent impervious calculation for the lot draining towards the super-elevated street section titled "Alley (private)" is more conservative than the lot draining towards the streets titled "Modified Residential Local (30 mph)" Therefore "Alley (private)" section was used and it specifies a super-elevated 20-foot travel lane and a 5-foot setback

Village Cottages

For the Village Cottage product, the average lot size is approximately 30 feet x 85 feet (the street frontage x the depth) The average pad footprint (impervious area) is 1,600 square feet. The street section titled "Alley (private)" was used and specifies a super-elevated 20 foot travel lane and a 5 foot setback

Village Courts

For the Village Court product, the average lot size are specified (job notes) to be 70 feet x 32 feet (the street frontage x the depth) The average pad footprint (impervious area) is 1,200 square feet The street section titled "Hillside Residential (30 mph)" was used to and specified a 4 feet sidewalk, 4 feet parkway, and 16 feet street half width

Village Bungalows.

For the Village Bungalows product, the average lot size is approximately 40 feet x 100 feet (the street frontage x the depth) The average pad footprint (impervious area) is 2,600 square feet The street section titled "Alley (private)" was used and specifies a super-elevated 20 foot travel lane and a 5 foot setback

Live/Work.

For the Live/Work product, the average lot size is approximately 30 feet x 85 feet (the street frontage x the depth). The average pad footprint (impervious area) is 1,700 square feet The street section titled "Alley (private)" was used and specifies a super-elevated 20 foot travel lane and a 5 foot setback

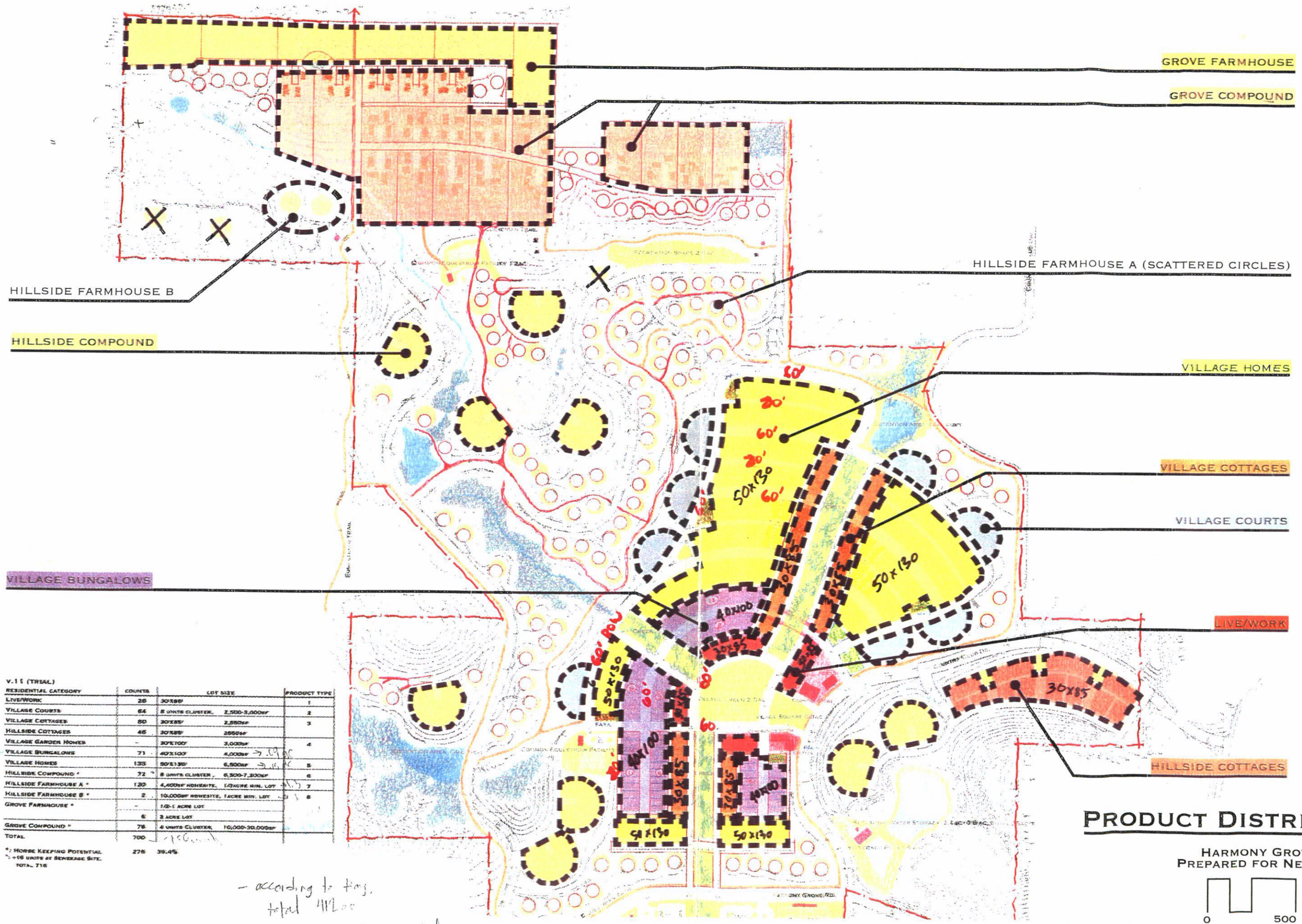


v.11 (TRIAL)

| RESIDENTIAL CATEGORY | COUNTS | LOT SIZE | | PRODUCT TYPE |
|---|---|---|---|---|
| LIVE/WORK | 28 | 30'X85' | | 1 |
| VILLAGE COURTS | 64 | 8 UNITS CLUSTER, | 2,500-3,000SF | 2 |
| VILLAGE COTTAGES | 80 | 30'X85' | 2,550SF | 3 |
| HILLSIDE COTTAGES | 48 | 30'X85' | 2550SF | |
| VILLAGE GARDEN HOMES | - | 30'X100' | 3,000SF | 4 |
| VILLAGE BUNGALOWS | 71 | 40'X100' | 4,000SF → .09 ac | |
| VILLAGE HOMES | 133 | 50'X130' | 6,500SF → .15 ac | 5 |
| HILLSIDE COMPOUND * | 72 | 8 UNITS CLUSTER, | 6,500-7,200SF | 6 |
| HILLSIDE FARMHOUSE A * | 120 | 4,400SF HOMESITE, | 1/3ACRE MIN. LOT | 7 |
| HILLSIDE FARMHOUSE B * | 2 | 10,000SF HOMESITE, | 1ACRE MIN. LOT | 8 |
| GROVE FARMHOUSE * | - | 1/2-1 ACRE LOT | | |
| | 6 | 2 ACRE LOT | | |
| GROVE COMPOUND * | 76 | 4 UNITS CLUSTER, | 10,000-30,000SF | |
| TOTAL | 700 | | | |
| *: HORSE KEEPING POTENTIAL | 276 | 39.4% | | |
| *: +16 UNITS AT SEWERAGE SITE. TOTAL 716 | | | | |

- according to Ray, total 412 ac

1.7 dy/ac total

# PRODUCT DISTRIBUTION

HARMONY GROVE CALIFORNIA
PREPARED FOR NEW URBAN WEST

0 500 SEP. 30, 2003

*PLAN AND UNIT COUNTS WILL BE REVISED FOR FURTHER REFINEMENT

Harmony Grove Village
14312 B
11/29/05
PZN VALUE

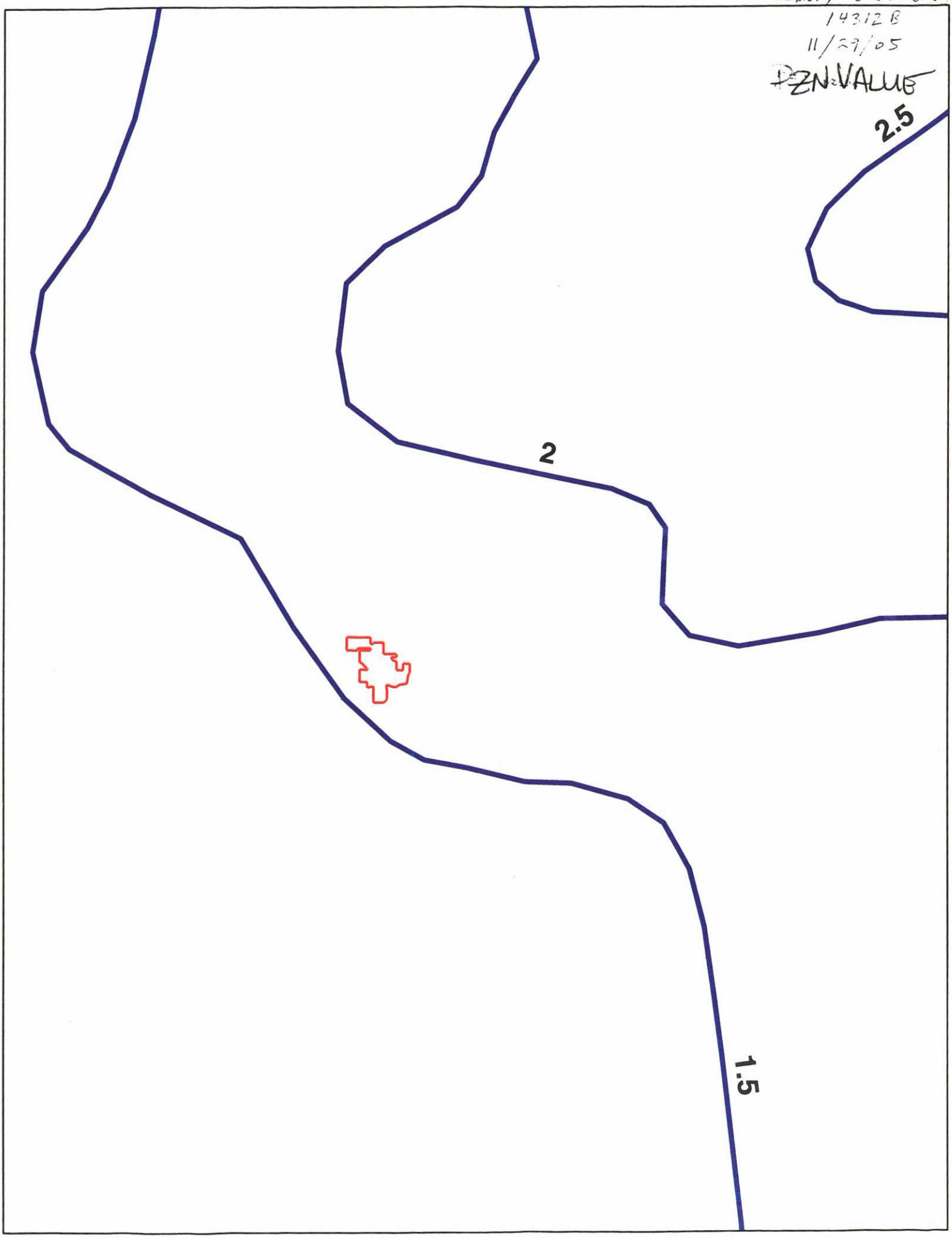

# Post Land Use

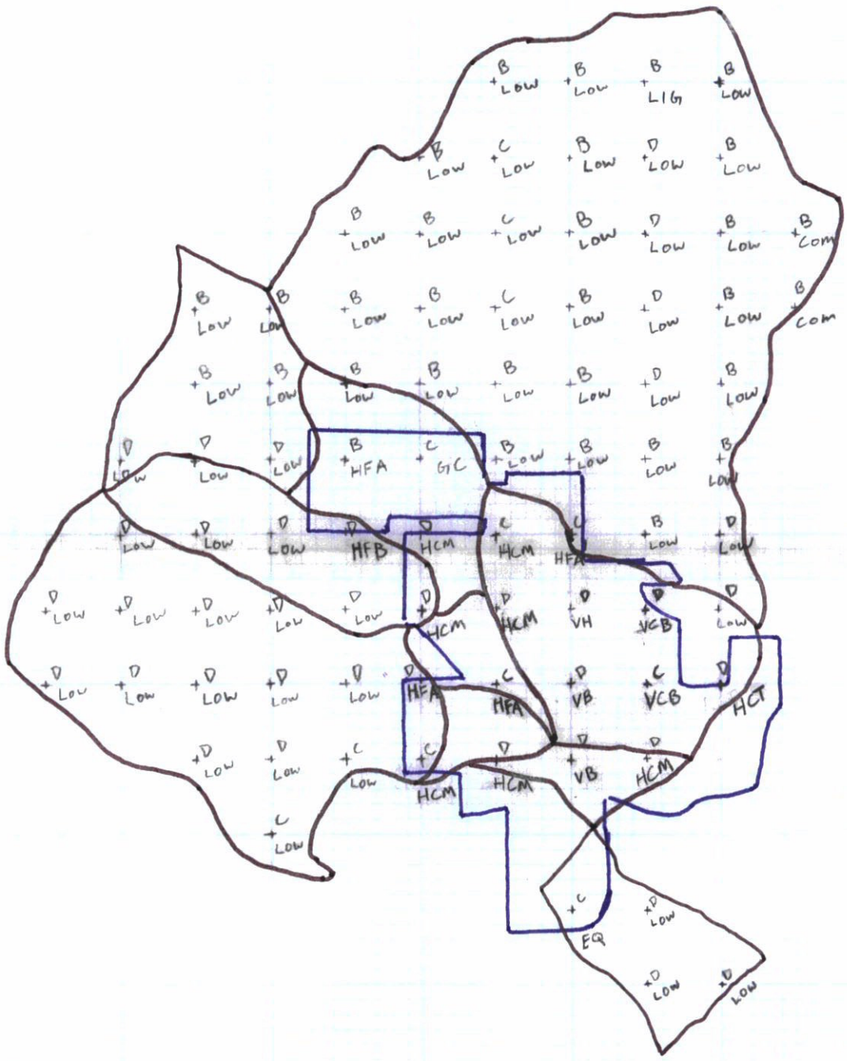


## Legend

+ B / LOW — Soil / Land use / Vegetative cover

~ Basin Boundary

~ Project Boundary

Soil

A Type A soil
B Type B soil
C Type C soil
D Type D soil

Harmony Grove Village
14312-B 1" = 2000'

Post Project Cond
Land Use

# APPENDIX B

## Support Material for NRCS (HEC-1) Flood Hydrograph Analyses

# Pre-Project

**Harmony Grove Village**
**J-14312B**
**FN:HEC-1 Analysis**
**12/1/2005**
**revised 12/14/05**

| Basin | Area (acres) | Area (square mile) | Highpoint | low point | Longest Water Coarse (ft) | Longest Water Coarse (mi) | Length of flow path Centorid to Downstream (ft) | Length of flow path Centorid to Downstream (mi) | Slope (ft/mi) | Basin Factor Pre | Basin Factor Post |
|---|---|---|---|---|---|---|---|---|---|---|---|
| 1 | 828 3 | 1.29 | 710 | 620 | 7800 | 1 48 | 4300 | 0 81 | 60 9 | 0 050 | 0 050 |
| 2 | 176 6 | 0 28 | 790 | 570 | 4000 | 0 76 | 1300 | 0 25 | 290.4 | 0.050 | 0.018 |
| 3 | 124 5 | 0 19 | 1325 | 810 | 3500 | 0 66 | 1400 | 0 27 | 776 9 | 0 050 | 0 050 |
| 4 | 112 6 | 0 18 | 1040 | 670 | 4000 | 0.76 | 2100 | 0 40 | 488.4 | 0 050 | 0 018 |
| 5 | 120 5 | 0 19 | 1610 | 670 | 5000 | 0.95 | 2500 | 0.47 | 992 6 | 0 050 | 0.050 |
| 6 | 36.5 | 0.06 | 670 | 570 | 2500 | 0.47 | 1700 | 0.32 | 211 2 | 0 050 | 0 018 |
| 7 | 356 0 | 0 56 | 1688 | 620 | 6800 | 1 29 | 3200 | 0 61 | 829 3 | 0.050 | 0 050 |
| 8 | 29 0 | 0 05 | 620 | 570 | 1500 | 0.28 | 1000 | 0 19 | 176.0 | 0.050 | 0 018 |
| 9 | 28 7 | 0 04 | 570 | 560 | 1200 | 0.23 | 700 | 0 13 | 44.0 | 0 050 | 0 018 |
| 10 | 86.0 | 0.13 | 1073 | 560 | 4200 | 0 80 | 2000 | 0 38 | 644 9 | 0 050 | 0 045 |
| | 1898 7 | 2 97 | | | | | | | | | |

Harmony Grove Village
J-14312B

11/25/2005 revised 12/14/05
Hec-1 pre condition curve numbers (PZN= 2)
File name HEC-1_112305_pre condition

# Pre Condition Curve Number Worksheet

| Basin | Hydrologic soil group (per workmap) | Hydrologic Land Use (per workmap) | Hydrologic Land Use | Cover Description (table 4-2) | | Grid Intersection $A_i$ (per workmap) | Fraction of Grid Intersection $A_i/A$ | NRCS Curve Number (CN) for PZN = 2 0 (table 4-2) | Practical CN $(CN_2)(A_i/A)$ |
|---|---|---|---|---|---|---|---|---|---|
| 1 | B | LOW | Low Residential | 1 Acre | | 23 | 0 66 | 68 | 44 7 |
| 1 | B | LIG | Light Industrial | Urban District Industrial | | 1 | 0 03 | 88 | 2 5 |
| 1 | B | COM | Commercial | Urban District Commercial | | 2 | 0 06 | 92 | 5 3 |
| 1 | C | LOW | Low Residential | 1 Acre | | 3 | 0 09 | 79 | 6 8 |
| 1 | C | 18310 | Field / Pasture | Annual Grass (Fair) | | 1 | 0 03 | 79 | 2 3 |
| 1 | D | LOW | Low Residential | 1 Acre | | 5 | 0 14 | 84 | 12 0 |
| | | | | | Sum | 35 | 1 | | 73 |
| 2 | C | 18100 | Orchard and Vineyard | Vineyard Annual Grass or Legume Cover (Fair) | | 1 | 0 125 | 79 | 9 9 |
| 2 | C | 18200 | Intense Agriculture | Pasture or Range land | | 1 | 0 125 | 86 | 10 8 |
| 2 | D | 18310 | Field Pasture | Annual Grass (Fair) | | 2 | 0 25 | 80 | 20 0 |
| 2 | D | 18200 | Intense Agriculture | Pasture or Range land | | 2 | 0 25 | 89 | 22 3 |
| 2 | D | HEA | Heavy Industry | Urban District Commercial | | 1 | 0 125 | 95 | 11 9 |
| 2 | D | LOW | Low Residential | 1 Acre | | 1 | 0 125 | 84 | 10 5 |
| | | | | | Sum | 8 | 1 | | 85 |
| 3 | B | LOW | Low Residential | 1 Acre | | 4 | 0 67 | 68 | 45 3 |
| 3 | D | LOW | Low Residential | 1 Acre | | 2 | 0 33 | 84 | 28 0 |
| | | | | | | 6 | 1 | | 73 |
| 4 | B | LOW | Low Residential | 1 Acre | | 1 | 0 25 | 68 | 17 0 |
| 4 | B | 18100 | Orchards & Vineyards | Vineyard Annual Grass or Legume Cover (Fair) | | 1 | 0 25 | 69 | 17 3 |
| 4 | C | 18100 | Orchards & Vineyards | Vineyard Annual Grass or Legume Cover (Fair) | | 1 | 0 25 | 79 | 19 8 |
| 4 | D | 37120 | Southern Mix Chaparral | Narrow leaf chaparral | | 1 | 0 25 | 86 | 21 5 |
| | | | | | Sum | 4 | 1 | | 76 |
| 5 | D | 37120 | Southern Mix Chaparral | Narrowleaf Chaparral (fair) | | 1 | 0 17 | 86 | 14 3 |
| 5 | D | 18100 | Orchards & Vineyard | Vineyard Annual Grass or Legume Cover (Fair) | | 1 | 0 17 | 84 | 14 0 |
| 5 | D | LOW | Low Residential | 1 Acre | | 4 | 0 67 | 84 | 56 0 |
| | | | | | Sum | 6 | 1 | | 84 |
| 6 | C | 18310 | Field / Pasture | Annual Grass (Fair) | | 1 | 1 | 79 | 79 0 |
| | | | | | Sum | 1 | | | 79 |
| 7 | C | LOW | Low Residential | 1 Acre | | 2 | 0 13 | 79 | 9 9 |
| 7 | C | 71161 | Open Coast Live Oak Woodland | Woods (Woodland) (Fair) | | 1 | 0 06 | 77 | 4 8 |
| 7 | D | 18310 | Field / Pasture | Annual Grass (Fair) | | 1 | 0 06 | 84 | 5 3 |
| 7 | D | LOW | Low Residential | 1 Acre | | 12 | 0 75 | 84 | 63 0 |
| | | | | | Sum | 16 | 1 | | 83 |
| 8 | D | 18310 | Field / Pasture | Annual Grass (Fair) | | 1 | 1 | 84 | 84 0 |
| | | | | | Sum | 1 | | | 84 |
| 9 | D | 18310 | Field / Pasture | Annual Grass (Fair) | | 1 | 0 50 | 84 | 42 0 |
| 9 | D | HEA | Heavy Industrial | Urban District Commercial | | 1 | 0 50 | 95 | 47 5 |
| | | | | | Sum | 2 | 1 | | 90 |
| 10 | C | 42000 | Valley and Foothill Grassland | Annual Grass (Fair) | | 1 | 0 25 | 79 | 19 75 |
| 10 | D | LOW | Low Residential | 1 Acre | | 3 | 0 75 | 84 | 63 |
| | | | | | Sum | 4 | 1 | | 83 |

## Table 4-2
## RUNOFF CURVE NUMBERS[1] FOR PZN CONDITION = 2.0

| Cover Description | Cover Treatment or Practice[2] | Hydrologic Condition[3] | Average Percent Impervious Area[4] | Curve Numbers for Hydrologic Soil Groups. A | B | C | D |
|---|---|---|---|---|---|---|---|
| Developing urban areas and newly graded areas (pervious areas only, no vegetation) | | | | 77 | 86 | 91 | 94 |
| Impervious areas Paved parking lots, roofs, and driveways (excluding right-of-way) | | | | 98 | 98 | 98 | 98 |
| Residential districts by average lot size [4] | | | | | | | |
| 1/8 acre or less (town houses) | | | 65% | 77 | 85 | 90 | 92 |
| 1/4 acre | | | 38% | 61 | 75 | 83 | 87 |
| 1/3 acre | | | 30% | 57 | 72 | 81 | 86 |
| 1/2 acre | | | 25% | 54 | 70 | 80 | 85 |
| 1 acre | | | 20% | 51 | 68 | 79 | 84 |
| 2 acres | | | 12% | 46 | 65 | 77 | 82 |
| Streets and roads | Paved, curbs and storm drains (excluding right-of-way) | | | 98 | 98 | 98 | 98 |
| | Paved, open ditches (including right-of-way) | | | 83 | 89 | 92 | 93 |
| | Gravel (including right-of-way) | | | 76 | 85 | 89 | 91 |
| | Hard surface (including right-of-way) | | | 74 | 84 | 90 | 92 |
| | Dirt (including right-of-way) | | | 72 | 82 | 87 | 89 |
| Urban districts[4] | Commercial and business | | 85% | 89 | 92 | 94 | 95 |
| | Industrial | | 72% | 81 | 88 | 91 | 93 |
| Western desert urban areas | | | | | | | |
| Natural desert landscaping (pervious areas only)[5] | | | | 63 | 77 | 85 | 88 |
| Artificial desert landscaping (impervious weed barrier, desert shrub with 1- to 2-inch sand or gravel mulch and basin borders) | | | | 96 | 96 | 96 | 96 |

## Table 4-2 (Continued)
## RUNOFF CURVE NUMBERS[1] FOR PZN CONDITION = 2.0

| Cover Description | Cover Treatment or Practice[2] | Hydrologic Condition[3] | Average Percent Impervious Area[4] | Curve Numbers for Hydrologic Soil Groups A | B | C | D |
|---|---|---|---|---|---|---|---|
| Small grain | Straight row | Poor | | 65 | 76 | 84 | 88 |
| | | Good | | 63 | 75 | 83 | 87 |
| | Contoured | Poor | | 63 | 74 | 82 | 85 |
| | | Good | | 61 | 73 | 81 | 84 |
| Vineyards[6] | Disked | | | 76 | 85 | 90 | 92 |
| | Annual grass or legume cover | Poor | | 65 | 78 | 85 | 89 |
| | | Fair | | 50 | 69 | 79 | 84 |
| | | Good | | 38 | 61 | 74 | 80 |
| Annual grass (Dryland pasture) | | Poor | | 67 | 78 | 86 | 89 |
| | | Fair | | 50 | 69 | 79 | 84 |
| | | Good | | 38 | 61 | 74 | 80 |
| Barren | | | | 78 | 86 | 91 | 93 |
| Meadow | | Poor | | 63 | 77 | 85 | 88 |
| | | Fair | | 51 | 70 | 80 | 84 |
| | | Good | | 30 | 58 | 72 | 78 |
| Open space (lawns, parks, golf courses, cemeteries, etc )[7] | Grass cover <50% | Poor | | 68 | 79 | 86 | 89 |
| | Grass cover 50% to 75% | Fair | | 49 | 69 | 79 | 84 |
| | Grass cover >75% | Good | | 39 | 61 | 74 | 80 |
| Pasture or range land | | Poor | | 68 | 79 | 86 | 89 |
| | | Fair | | [illegible] | 69 | 79 | 84 |
| | | Good | | 39 | 61 | 74 | 80 |
| Perennial grass | | Poor | | 67 | 79 | 86 | 89 |
| | | Fair | | 50 | 69 | 79 | 84 |
| | | Good | | 38 | 61 | 74 | 80 |

## Table 4-2 (Continued)
## RUNOFF CURVE NUMBERS[1] FOR PZN CONDITION = 2.0

| Cover Description | Cover Treatment or Practice[2] | Hydrologic Condition[3] | Average Percent Impervious Area[4] | Curve Numbers for Hydrologic Soil Groups A | B | C | D |
|---|---|---|---|---|---|---|---|
| Turf[8] | | Poor | | 58 | 74 | 83 | 87 |
| | | Fair | | 44 | 65 | 77 | 82 |
| | | Good | | 33 | 58 | 72 | 79 |
| Water surfaces (during floods) | | | | 97 | 98 | 99 | 99 |
| Broadleaf chaparral | | Poor | | 53 | 70 | 80 | 85 |
| | | Fair | | 40 | 63 | 75 | 81 |
| | | Good | | 31 | 57 | 71 | 78 |
| Desert shrub–major plants include saltbush, greasewood, creosotebush, blackbrush, bursage, palo verde, mesquite, and cactus | | Poor | | 63 | 77 | 85 | 88 |
| | | Fair | | 55 | 72 | 81 | 86 |
| | | Good | | 49 | 68 | 79 | 84 |
| Herbaceous–mixture of grass, weeds, and low-growing brush, with brush the minor element | | Poor | | [9] | 80 | 87 | 93 |
| | | Fair | | [9] | 71 | 81 | 89 |
| | | Good | | [9] | 62 | 74 | 85 |
| Narrowleaf chaparral | | Poor | | 71 | 82 | 88 | 91 |
| | | Fair | | 55 | 72 | 81 | 86 |
| Oak-aspen–mountain brush mixture of oak brush, aspen, mountain mahogany, bitter brush, maple, and other brush | | Poor | | [9] | 66 | 74 | 79 |
| | | Fair | | [9] | 48 | 57 | 63 |
| | | Good | | [9] | 30 | 41 | 48 |
| Open brush | | Poor | | 62 | 76 | 84 | 88 |
| | | Fair | | 46 | 66 | 77 | 83 |
| | | Good | | 41 | 63 | 75 | 81 |

## Table 4-2 (Continued)
## RUNOFF CURVE NUMBERS[1] FOR PZN CONDITION = 2.0

| Cover Description | Cover Treatment or Practice[2] | Hydrologic Condition[3] | Average Percent Impervious Area[4] | Curve Numbers for Hydrologic Soil Groups[5] A | B | C | D |
|---|---|---|---|---|---|---|---|
| Pinyon-juniper–pinyon, juniper, or both, grass understory | | Poor | | [9] | 75 | 85 | 89 |
| | | Fair | | [9] | 58 | 73 | 80 |
| | | Good | | [9] | 41 | 61 | 71 |
| Sagebrush with grass understory | | Poor | | [9] | 67 | 80 | 85 |
| | | Fair | | [9] | 51 | 63 | 70 |
| | | Good | | [9] | 35 | 47 | 55 |
| Wood or forest land | | Thin stand, poor cover | | 45 | 66 | 77 | 83 |
| | | Good cover | | 25 | 55 | 70 | 77 |
| Woods (woodland) | | Poor | | 45 | 66 | 77 | 83 |
| | | Fair | | 36 | 60 | 73 | 79 |
| | | Good | | 28 | 55 | 70 | 77 |
| Woodland-grass combination | | Poor | | 57 | 73 | 82 | 86 |
| | | Fair | | 44 | 65 | 77 | 82 |
| | | Good | | 33 | 58 | 72 | 79 |

1 Average runoff condition, and $I_a = 0.2S$
2 Hydrologic practices described as "straight row" and "contoured" are defined in the glossary
3 For definition of hydrologic condition, see Tables 4-3, 4-4, and 4-5
4 The average percent impervious area shown was used to develop the composite CNs. Other assumptions are as follows: impervious areas are directly connected to the drainage system, impervious areas have a CN of 98, and pervious areas are considered equivalent to open space in good hydrologic condition. If the impervious area is not directly connected, the NRCS method has an adjustment to reduce the effect.
5 Composite CNs for natural desert landscaping should be computed based on the impervious area percentage (CN = 98) and the pervious area CN. The pervious area CNs are assumed equivalent to desert shrub in poor hydrologic condition.
6 See glossary
7 CNs shown are equivalent to those of pasture. Composite CNs may be computed for other combinations of open space cover type.
8 Includes lawns, cemeteries, golf courses and parks with ground cover of mowed and irrigated perennial grass.
9 CNs for Group A have not been developed.

### 4.2.1 Watershed, Geographic Location, Area, and Physical Characteristics

The watershed area and geographic location are determined from topographic maps and field surveys For large drainage areas it might be necessary to divide the area into subareas to account for major land use changes, obtain analysis results at different points within the watershed area, combine hydrographs from different subareas as applicable, and/or route flows to points of interest The highest elevation in the watershed (high point) and the elevation of the point of interest (low point) are determined from the map The watershed length along the longest watercourse and the length to centroid are also read from the map. The centroid is the point in the watershed where approximately 50% of the watershed area is contributing to the watercourse The length to centroid is measured from the low point of the watershed to the centroid

#### 4.2.1.1 Basin Factor ($\bar{n}$)

The basin $\bar{n}$ factor is the visually estimated mean of the n values (roughness values from Manning's formula) of all the channels within the basin area A basin $\bar{n}$ factor can be estimated by comparing characteristics of drainage areas being studied with the characteristics of the drainage areas for which basin $\bar{n}$ factors have been estimated Typical values of $\bar{n}$ range from 0 015 for areas that are mainly developed and have a large percentage of impervious area, to 0 100 for areas with extensive vegetation including vegetation in watercourses that slows water velocity

The following descriptions are a guide for estimating the basin $\bar{n}$ factor, based on Plate 21, *Lag Relationships* from *Antelope Valley Streams Los Angeles County, California, Draft Survey Report, Hydrology Part I*, prepared by the U S Army Engineer District, Los Angeles Corps of Engineers (USACE, 1976)

$\bar{n}$ = 0 100 The drainage area has extensive vegetation, including grass, or is farmed with contoured plowing, and streams that contain a large amount of brush, grass or other vegetation that slows water velocity

$\bar{n}$ = 0 050. Drainage area is quite rugged, with sharp ridges and narrow, steep canyons through which watercourses meander around sharp bends, over large boulders and considerable debris obstruction The ground cover, excluding small areas of rock outcrops, includes many trees and considerable underbrush No drainage improvements exist in the area.

$\bar{n}$ = 0 030. Drainage area is generally rolling, with rounded ridges and moderate side slopes Watercourses meander in fairly straight, unimproved channels with some boulders and lodged debris Ground cover includes scattered brush and grasses No drainage improvements exist in the area

$\bar{n}$ = 0 015. Drainage area has fairly uniform, gentle slopes with most watercourses either improved or along paved streets Ground cover consists of some grasses with appreciable areas developed to the extent that a large percentage of the area is impervious

The following additional references may also be helpful for determining an appropriate basin $\bar{n}$ factor *Guide for Selecting Manning's Roughness Coefficients for Natural Channels and Flood Plains* (USGS Water Supply Paper 2339) presents procedures for assigning reliable n values for channels and floodplains This paper contains some photos, examples, and step-by-step procedures The procedures can be used in the field *Open Channel Hydraulics* by Ven Te Chow also provides guidance with tables of n values and photographs

### 4.2.2 Rainfall and Precipitation Zone Number

The 6-hour and 24-hour rainfall amounts are taken from the isopluvial maps included in Appendix B For large watersheds that intersect more than one isopluvial, the engineer may estimate a weighted average rainfall amount for the entire watershed As described in Section 3 1 3, $P_6$ for the selected frequency should be between 45% and 65% of $P_{24}$ for the selected frequency If $P_6$ is not within 45% to 65% of $P_{24}$, $P_6$ should be increased or decreased as necessary to meet this criteria

NOTE:
12/08/05
14312b
FN HGV_LAG_.PRE

NOTE ON N SELECTION FOR PRE-PROJECT CONDITION:
THE BASIN FACTOR WAS DETERMINED TO BE 0.05 DUE TO THE LOW RESIDENTIAL LANDUSE AND VEGETATIVE COVER (PLEASE REFER TO LANDUSE AND VEGETATIVE COVER MAPS). FURTHERMORE, THERE ARE FEW EXISTING DRAINAGE IMPROVEMENTS FOR THE PRE-CONDITION.

THE BASIN FACTOR WILL BE THE SAME FOR ALL BASINS OUTSIDE AND INSIDE THE PROJECT BOUNDARY

NOTE
THE FOLLOWING COMPUTATION DONE BY THE COMPUTER PROGRAM COMPUTES THE SCS LAG WHICH IS THE NRCS LAG .

SCS LAG COMPUTATION
COPYRIGHT 1992 RICK ENGINEERING COMPANY

BASIN 1 05 pre

L = 1 48 MI
LC = .81 MI
S = 60 9 FT/MI
N = .05
D = 5 MIN

SCS LAG = 466 HRS

**********

SCS LAG COMPUTATION
COPYRIGHT 1992 RICK ENGINEERING COMPANY

BASIN 2

L = .76 MI
LC = .25 MI
S = 290 4 FT/MI
N = .05
D = 5 MIN

SCS LAG = 146 HRS

**********

SCS LAG COMPUTATION
COPYRIGHT 1992 RICK ENGINEERING COMPANY

BASIN 3

L = .66 MI
LC = .27 MI
S = 776.9 FT/MI
N = .05
D = 5 MIN

SCS LAG = .11 HRS

**********

SCS LAG COMPUTATION
COPYRIGHT 1992 RICK ENGINEERING COMPANY

BASIN 4

L = 76 MI
LC = 4 MI
S = 488 4 FT/MI
N = 05
D = 5 MIN

SCS LAG = .161 HRS

**********

SCS LAG COMPUTATION
COPYRIGHT 1992 RICK ENGINEERING COMPANY

BASIN 5

L = .95 MI
LC = .47 MI
S = 992.6 FT/MI
N = .05
D = 5 MIN

SCS LAG = .164 HRS

**********

SCS LAG COMPUTATION
COPYRIGHT 1992 RICK ENGINEERING COMPANY

BASIN 6

L = .47 MI
LC = 32 MI
S = 211.2 FT/MI
N = 05
D = 5 MIN

SCS LAG = 14 HRS

**********

SCS LAG COMPUTATION
COPYRIGHT 1992 RICK ENGINEERING COMPANY

BASIN 7

L = 1.29 MI
LC = .61 MI
S = 829.3 FT/MI
N = .05
D = 5 MIN

SCS LAG = 222 HRS

**********

SCS LAG COMPUTATION
COPYRIGHT 1992 RICK ENGINEERING COMPANY

BASIN 8

L = .28 MI
LC = .19 MI
S = 176 FT/MI
N = 05
D = 5 MIN

SCS LAG = .085 HRS

**********

SCS LAG COMPUTATION
COPYRIGHT 1992 RICK ENGINEERING COMPANY

BASIN 9

L = .23 MI
LC = .13 MI
S = 44 FT/MI
N = 05
D = 5 MIN

SCS LAG = .091 HRS

**********

SCS LAG COMPUTATION
COPYRIGHT 1992 RICK ENGINEERING COMPANY

BASIN 10

L = .8 MI
LC = .38 MI
S = 644 9 FT/MI
N = .05
D = 5 MIN

SCS LAG = .151 HRS

**********

**WORKSHEET 4-3** Harmony Grove Village (name of project) **Peak Discharge Computation**

*****For use with NRCS Hydrologic Method Computations*****

Items in boxes are required input parameters for the SDUH Peak Discharge Program

Computed by Rick Engineering Company Date 12/12/05

Project Identification (Drainage Area Name) Pce Project Basin 1

Geographic location of center of drainage area Long _____ " Lat _____ "

Drainage Area 1.29 – square miles

Storm Frequency (Section 2 3) 2 – year

6-Hour Storm Duration Precipitation (Appendix B) 1 5 – inches

24-Hour Storm Duration Precipitation (Appendix B) 2.4 – inches

Precipitation Zone Number (PZN) (Section 4 1 2 4 and Appendix C) PZN = 1 0 1.6 2 0 ____ 3 0 ____ 4 0

LESS THAN A ~~5-year to~~ 35-year storm frequency (interpolate) (Section 4 1 2 4 and Table 4-6) 1 5 2.1 2 5 ____ 2 0 ____ 1 5

PZN Ajustment Factor for 35-year to 150-year storm frequency (interpolate) (Section 4 1 2 4 and Table 4-6) 2 0 ____ 3 0 ____ 3 0 ____ 2 0

PZN Adjusted Runoff Curve Number (interpolate between nearest whole number PZN conditions) (Sections 4 1 2 4 and 4 2 4, Tables 4-6 and 4-10) $CN_{10 \text{ or } 20}$ 73 $CN_X$ 74 $CN_{20 \text{ or } 30}$ 87

(87 - 73) (.1) + 73 =

Watershed Length (L) (Section 4 3 1) 1.48 – miles

Length to Centroid ($L_c$) (Section 4 3 1) 0.81 – miles

Slope (s) (Section 4 3 1) 609 – feet/mile

Basin $\bar{n}$ Factor (Section 4 3 5) 0 05

Corps lag ($T_L$) = 24 $\bar{n}$ $((L \times L_c)/s^{0.5})^m$ (Section 4 3 1 1)
OR
Corps lag ($T_L$) = 0 8 $T_c$ (Section 4 3 1 2)

Lag Time 0 59 – hours

Time to Peak = 0 862 x Corps lag (Section 4 1 5 5)

Time to Peak 0 51 – hours

NRCS ($T_L$) 0 466 hour

**WORKSHEET 4-3** Harmony Grove Village (name of project) **Peak Discharge Computation**

*****For use with NRCS Hydrologic Method Computations*****

Items in boxes are required input parameters for the SDUH Peak Discharge Program

Computed by Rick Engineering Company Date: 12/12/05

Project Identification (Drainage Area Name) Pre Project · Basin 2

Geographic location of center of drainage area Long _____ " Lat: _____ "

Drainage Area 0 28 – square miles

Storm Frequency (Section 2 3) 2 – year

6-Hour Storm Duration Precipitation (Appendix B) 1.5 – inches

24-Hour Storm Duration Precipitation (Appendix B) 2.4 – inches

Precipitation Zone Number (PZN). (Section 4 1 2 4 and Appendix C) PZN = 1.0 1.6 2 0 ____ 3 0 ____ 4 0

LESS THAN A PZN Ajustment Factor for ~~5-year to~~ 35-year storm frequency (interpolate) (Section 4 1 2 4 and Table 4-6) 1 5 2 1 2 5 ____ 2 0 ____ 1 5

PZN Ajustment Factor for 35-year to 150-year storm frequency (interpolate) (Section 4 1 2 4 and Table 4-6) 2 0 ____ 3 0 ____ 3 0 ____ 2 0

PZN Adjusted Runoff Curve Number (interpolate between nearest whole number PZN conditions) (Sections 4 1 2 4 and 4 2 4, Tables 4-6 and 4-10) $CN_{1\,0\text{ or }2\,0}$ 85 $CN_X$ 86 $CN_{2\,0\text{ or }3\,0}$ 94

Watershed Length (L) (Section 4 3 1) 0 76 – miles

Length to Centroid ($L_c$) (Section 4 3 1) 0 25 – miles

Slope (s) (Section 4 3 1) 290.4 – feet/mile Basin $\bar{n}$ Factor (Section 4 3 5) 0 05

Corps lag ($T_L$) = 24 $\bar{n}$ $((L \times L_c)/s^{0\,5})^m$ (Section 4 3 1 1)
OR
Corps lag ($T_L$) = 0.8 $T_c$ (Section 4 3 1.2) Lag Time 0 217 – hours

Time to Peak = 0 862 x Corps lag (Section 4 1 5 5) Time to Peak 0 187 – hours

NRCS (TL) 0.146 - hour

**WORKSHEET 4-3** Harmony Grove Village (name of project) **Peak Discharge Computation**

*****For use with NRCS Hydrologic Method Computations*****

Items in boxes are required input parameters for the SDUH Peak Discharge Program

Computed by Rick Engineering Company Date 12/12/05

Project Identification (Drainage Area Name) Pre Project Basin 3

Geographic location of center of drainage area. Long _____ " Lat. _____ "

Drainage Area 0.19 – square miles

Storm Frequency (Section 2 3) 2 – year

6-Hour Storm Duration Precipitation (Appendix B) 1.5 – inches

24-Hour Storm Duration Precipitation (Appendix B) 2 4 – inches

Precipitation Zone Number (PZN) (Section 4 1.2 4 and Appendix C) PZN = 1 0 1.6 2 0 ____ 3 0 ____ 4 0

LESS THAN A ~~5 year to~~ PZN Ajustment Factor for 35-year storm frequency (interpolate) (Section 4 1 2 4 and Table 4-6) 1 5 2 1 2 5 ____ 2 0 ____ 1 5

PZN Ajustment Factor for 35-year to 150-year storm frequency (interpolate) (Section 4 1 2 4 and Table 4-6) 2 0 ____ 3 0 ____ 3 0 ____ 2 0

PZN Adjusted Runoff Curve Number (interpolate between nearest whole number PZN conditions) (Sections 4 1 2 4 and 4 2 4, Tables 4-6 and 4-10) $CN_{1\,0\,or\,2\,0}$ 73 $CN_X$ 74 $CN_{2\,0\,or\,5\,0}$ 87

Watershed Length (L) (Section 4 3 1) 0 66 – miles

Length to Centroid ($L_c$) (Section 4 3 1) 0.27 – miles

Slope (s) (Section 4 3 1) 776.9 – feet/mile

Basin $\bar{n}$ Factor (Section 4 3 5) 0 05

Corps lag ($T_L$) = 24 $\bar{n}$ $((L \times L_c)/s^{0\,5})^m$ (Section 4 3 1.1)
OR
Corps lag ($T_L$) = 0 8 $T_c$ (Section 4 3 1 2)

Lag Time 0.176 – hours

Time to Peak = 0 862 x Corps lag (Section 4 1 5 5)

Time to Peak 0.152 – hours

$NRCS_{(T_L)}$ 0.11 - hours

**WORKSHEET 4-3** Harmony Grove Village (name of project) **Peak Discharge Computation**

*****For use with NRCS Hydrologic Method Computations*****

Items in boxes are required input parameters for the SDUH Peak Discharge Program

Computed by Rick Engineering Company Date: 12/12/05

Project Identification (Drainage Area Name) Pre Project Basin 4

Geographic location of center of drainage area. Long _____ " Lat _____ "

Drainage Area: 0.18 – square miles

Storm Frequency (Section 2 3) 2 – year

6-Hour Storm Duration Precipitation (Appendix B) 1.5 – inches

24-Hour Storm Duration Precipitation (Appendix B) 2.4 – inches

Precipitation Zone Number (PZN) (Section 4 1 2 4 and Appendix C) PZN = 1 0 1.6 2 0 ____ 3 0 ____ 4 0

LESS THAN A ~~Equal to~~ PZN Ajustment Factor for 35-year storm frequency (interpolate) (Section 4 1 2 4 and Table 4-6) 1 5 2.1 2 5 ____ 2 0 ____ 1 5

PZN Ajustment Factor for 35-year to 150-year storm frequency (interpolate) (Section 4 1 2 4 and Table 4-6) 2 0 ____ 3 0 ____ 3 0 ____ 2 0

PZN Adjusted Runoff Curve Number (interpolate between nearest whole number PZN conditions) (Sections 4 1 2 4 and 4 2 4, Tables 4-6 and 4-10) $CN_{10 \text{ or } 20}$ 76 $CN_X$ 77 $CN_{20 \text{ or } 30}$ 89

Watershed Length (L) (Section 4 3 1). 0.76 – miles

Length to Centroid ($L_c$) (Section 4 3 1) 0.40 – miles

Slope (s) (Section 4 3 1) 488.4 – feet/mile

Basin $\bar{n}$ Factor (Section 4 3 5) 0.05

Corps lag ($T_L$) = 24 $\bar{n}$ $((L \times L_c)/s^{0.5})^m$ (Section 4 3 1 1)
OR
Corps lag ($T_L$) = 0 8 $T_c$ (Section 4 3 1 2)

Lag Time. 0.235 – hours

Time to Peak = 0 862 x Corps lag (Section 4 1.5 5)

Time to Peak 0.203 – hours

0.161 – hour

**WORKSHEET 4-3** Harmony Grove Village (name of project) **Peak Discharge Computation**

*****For use with NRCS Hydrologic Method Computations*****

Items in boxes are required input parameters for the SDUH Peak Discharge Program

Computed by Rick Engineering Company Date: 12/12/05

Project Identification (Drainage Area Name): Pre Project Basin 5

Geographic location of center of drainage area Long: ____ " Lat ____ "

Drainage Area 0.19 – square miles

Storm Frequency (Section 2 3) 2 – year

6-Hour Storm Duration Precipitation (Appendix B) 1.5 – inches

24-Hour Storm Duration Precipitation (Appendix B) 2.4 – inches

Precipitation Zone Number (PZN) (Section 4 1.2 4 and Appendix C) PZN = 10 1 6 20 ____ 30 ____ 40

LESS THAN A ~~5-year to~~ PZN Ajustment Factor for 35-year storm frequency (interpolate) (Section 4 1 2 4 and Table 4-6) 15 2 1 25 ____ 20 ____ 15

PZN Ajustment Factor for 35-year to 150-year storm frequency (interpolate) (Section 4 1 2 4 and Table 4-6) 20 ____ 30 ____ 30 ____ 20

PZN Adjusted Runoff Curve Number (interpolate between nearest whole number PZN conditions) (Sections 4 1 2 4 and 4 2 4, Tables 4-6 and 4-10) $CN_{10 \text{ or } 30}$ 84 $CN_X$ 85 $CN_{20 \text{ or } 30}$ 93

Watershed Length (L) (Section 4 3 1) 0 95 – miles

Length to Centroid ($L_c$) (Section 4 3 1) 0.47 – miles

Slope (s) (Section 4 3 1) 992 6 – feet/mile

Basin $\bar{n}$ Factor (Section 4 3 5) 0 05

Corps lag ($T_L$) = 24 $\bar{n}$ $((L \times L_c)/s^{0.5})^m$ (Section 4 3 1 1)
OR
Corps lag ($T_L$) = 0 8 $T_c$ (Section 4 3 1 2)

Lag Time 0 238 – hours

Time to Peak = 0 862 x Corps lag (Section 4 1 5 5)

Time to Peak 0.205 – hours

NRCS $_{(TL)}$ 0.164 · hour

**WORKSHEET 4-3** Harmony Grove Village **Peak Discharge Computation**
(name of project)

*****For use with NRCS Hydrologic Method Computations*****

Items in boxes are required input parameters for the SDUH Peak Discharge Program.

Computed by Rick Engineering Company Date 12/12/05

Project Identification (Drainage Area Name) Pre Project Basin 6

Geographic location of center of drainage area Long ____ " Lat. ____ "

Drainage Area 0.06 – square miles

Storm Frequency (Section 2 3) 2 – year

6-Hour Storm Duration Precipitation (Appendix B) 1.5 – inches

24-Hour Storm Duration Precipitation (Appendix B) 2.4 – inches

Precipitation Zone Number (PZN) (Section 4 1 2 4 and Appendix C) PZN = 1 0 1.6 2.0 ____ 3 0 ____ 4 0

LESS THAN A ~~5-year to~~ PZN Ajustment Factor for 35-year storm frequency (interpolate) (Section 4 1 2 4 and Table 4-6) 1 5 2 1 2 5 ____ 2 0 ____ 1 5

PZN Ajustment Factor for 35-year to 150-year storm frequency (interpolate) (Section 4 1.2 4 and Table 4-6) 2 0 ____ 3 0 ____ 3 0 ____ 2 0

PZN Adjusted Runoff Curve Number (interpolate between nearest whole number PZN conditions) (Sections 4 1 2 4 and 4.2.4, Tables 4-6 and 4-10) $CN_{1\,0\,or\,2\,0}$ 79 $CN_X$ 80 $CN_{2\,0\,or\,3\,0}$ 91

Watershed Length (L) (Section 4 3 1) 0 47 – miles

Length to Centroid ($L_c$) (Section 4 3 1) 0.32 – miles

Slope (s) (Section 4 3 1) 211.2 – feet/mile

Basin $\bar{n}$ Factor (Section 4 3 5) 0 05

Corps lag ($T_L$) = 24 $\bar{n}$ $((L \times L_c)/s^{0\,5})^m$ (Section 4 3 1 1)
OR
Corps lag ($T_L$) = 0 8 $T_c$ (Section 4 3 1 2)

Lag Time 0.211 – hours

Time to Peak = 0 862 x Corps lag (Section 4 1 5 5)

Time to Peak 0 182 – hours

NRCS (TL) 0.140 – hour

**WORKSHEET 4-3** Harmony Grove Village (name of project) **Peak Discharge Computation**

*****For use with NRCS Hydrologic Method Computations*****

Items in boxes are required input parameters for the SDUH Peak Discharge Program

Computed by Rick Engineering Company Date: 12/12/05

Project Identification (Drainage Area Name): Pre Project Basin 7

Geographic location of center of drainage area Long ____ " Lat ____ "

Drainage Area: 0.56 – square miles

Storm Frequency (Section 2.3): 2 – year

6-Hour Storm Duration Precipitation (Appendix B): 1.5 – inches

24-Hour Storm Duration Precipitation (Appendix B): 2.4 – inches

Precipitation Zone Number (PZN) (Section 4.1.2.4 and Appendix C) PZN = 1.0 1.6 2.0 ____ 3.0 ____ 4.0

LESS THAN A ~~5-year to~~ PZN Ajustment Factor for 35-year storm frequency (interpolate) (Section 4.1.2.4 and Table 4-6) 1.5 2.1 2.5 ____ 2.0 ____ 1.5

PZN Ajustment Factor for 35-year to 150-year storm frequency (interpolate) (Section 4.1.2.4 and Table 4-6) 2.0 ____ 3.0 ____ 3.0 ____ 2.0

PZN Adjusted Runoff Curve Number (interpolate between nearest whole number PZN conditions) (Sections 4.1.2.4 and 4.2.4, Tables 4-6 and 4-10) $CN_{1.0 \text{ or } 2.0}$ 83 $CN_X$ 84 $CN_{2.0 \text{ or } 3.0}$ 93

Watershed Length (L) (Section 4.3.1) 1.29 – miles

Length to Centroid ($L_c$) (Section 4.3.1) 0.61 – miles

Slope (s) (Section 4.3.1) 829.3 – feet/mile

Basin $\bar{n}$ Factor (Section 4.3.5) 0.05

Corps lag ($T_L$) = 24 $\bar{n}$ $((L \times L_c)/s^{0.5})^m$ (Section 4.3.1.1)
OR
Corps lag ($T_L$) = 0.8 $T_c$ (Section 4.3.1.2)

Lag Time 0.306 – hours

Time to Peak = 0.862 x Corps lag (Section 4.1.5.5)

Time to Peak 0.263 – hours

$NRCS_{(T_L)}$ 0.222 - hour

**WORKSHEET 4-3** Harmony Grove Village **Peak Discharge Computation**
(name of project)

*****For use with NRCS Hydrologic Method Computations*****

Items in boxes are required input parameters for the SDUH Peak Discharge Program.

Computed by Rick Engineering Company Date: 12/12/05

Project Identification (Drainage Area Name): Pre-Project Basin 8

Geographic location of center of drainage area Long _____ " Lat _____ "

Drainage Area 0.05 – square miles

Storm Frequency (Section 2 3) 2 – year

6-Hour Storm Duration Precipitation (Appendix B) 1.5 – inches

24-Hour Storm Duration Precipitation (Appendix B) 2.1 – inches

Precipitation Zone Number (PZN) (Section 4 1 2 4 and Appendix C) PZN = 10 1.6 20 ____ 30 ____ 40

LESS THAN A ~~Square to~~ PZN Ajustment Factor for 35-year storm frequency (interpolate) (Section 4 1 2 4 and Table 4-6) 15 2.1 25 ____ 20 ____ 15

PZN Ajustment Factor for 35-year to 150-year storm frequency (interpolate) (Section 4 1 2 4 and Table 4-6) 20 ____ 30 ____ 30 ____ 20

PZN Adjusted Runoff Curve Number (interpolate between nearest whole number PZN conditions) (Sections 4 1 2 4 and 4 2 4, Tables 4-6 and 4-10) $CN_{10 \text{ or } 20}$ 84 $CN_X$ 85 $CN_{20 \text{ or } 10}$ 93

Watershed Length (L) (Section 4 3 1) 0 28 – miles

Length to Centroid ($L_c$) (Section 4 3.1) 0 19 – miles

Slope (s) (Section 4 3 1) 176 0 – feet/mile

Basin $\bar{n}$ Factor (Section 4 3 5) 0.05

Corps lag ($T_L$) = 24 $\bar{n}$ $((L \times L_c)/s^{0.5})^m$ (Section 4 3 1.1)
OR
Corps lag ($T_L$) = 0 8 $T_c$ (Section 4 3 1 2)

Lag Time 0.147 – hours

Time to Peak = 0 862 x Corps lag (Section 4 1 5 5)

Time to Peak 0 127 – hours

NRCS ($T_L$) 0.085 - hour

**WORKSHEET 4-3** Harmony Grove Village (name of project) **Peak Discharge Computation**

*****For use with NRCS Hydrologic Method Computations*****

Items in boxes are required input parameters for the SDUH Peak Discharge Program

Computed by Rick Engineering Date: 12/12/05

Project Identification (Drainage Area Name) Pre Project Basin 9

Geographic location of center of drainage area. Long ____ " Lat: ____ "

Drainage Area 0 04 – square miles

Storm Frequency (Section 2 3) 2 – year

6-Hour Storm Duration Precipitation (Appendix B) 1.5 – inches

24-Hour Storm Duration Precipitation (Appendix B) 2 1 – inches

Precipitation Zone Number (PZN) (Section 4 1 2 4 and Appendix C) PZN = 1 0 1 6 2.0 ____ 3 0 ____ 4 0

LESS THAN A ~~5 year to~~ PZN Ajustment Factor for 35-year storm frequency (interpolate) (Section 4 1 2 4 and Table 4-6) 1 5 2.1 2 5 ____ 2 0 ____ 1 5

PZN Ajustment Factor for 35-year to 150-year storm frequency (interpolate) (Section 4 1 2 4 and Table 4-6) 2 0 ____ 3 0 ____ 3 0 ____ 2 0

PZN Adjusted Runoff Curve Number (interpolate between nearest whole number PZN conditions) (Sections 4 1 2 4 and 4 2 4, Tables 4-6 and 4-10) $CN_{1\,0\text{ or }2\,0}$ 90 $CN_X$ 91 $CN_{2\,0\text{ or }3\,0}$ 96

Watershed Length (L) (Section 4 3 1) 0 23 – miles

Length to Centroid ($L_c$) (Section 4 3.1) 0 13 – miles

Slope (s) (Section 4 3 1) 44 0 – feet/mile

Basin $\bar{n}$ Factor (Section 4 3 5) 0.05

Corps lag ($T_L$) = 24 $\bar{n}$ $((L \times L_c)/s^{0\,5})^m$ (Section 4 3 1 1)
OR
Corps lag ($T_L$) = 0 8 $T_c$ (Section 4 3 1 2)

Lag Time 0.154 – hours

Time to Peak = 0 862 x Corps lag (Section 4 1 5 5)

Time to Peak 0.133 – hours

NRCS ($T_L$) 0.091 - hour

**WORKSHEET 4-3** Harmony Grove Village (name of project) **Peak Discharge Computation**

*****For use with NRCS Hydrologic Method Computations*****

Items in boxes are required input parameters for the SDUH Peak Discharge Program.

Computed by Rick Engineering Company Date 12/14/05

Project Identification (Drainage Area Name) Pre Project Basin 10

Geographic location of center of drainage area Long _____ " Lat. _____ "

Drainage Area 0 13 – square miles

Storm Frequency (Section 2 3) 2 – year

6-Hour Storm Duration Precipitation (Appendix B) 1.5 – inches

24-Hour Storm Duration Precipitation (Appendix B) 2 4 – inches

Precipitation Zone Number (PZN) (Section 4 1 2 4 and Appendix C) PZN = 1 0 1 6 2 0 ____ 3 0 ____ 4 0

LESS THAN A ~~5 year to~~ PZN Ajustment Factor for 35-year storm frequency (interpolate) (Section 4 1.2 4 and Table 4-6) 1 5 2 1 2 5 ____ 2.0 ____ 1 5

PZN Ajustment Factor for 35-year to 150-year storm frequency (interpolate) (Section 4 1 2 4 and Table 4-6) 2 0 ____ 3 0 ____ 3 0 ____ 2.0

PZN Adjusted Runoff Curve Number (interpolate between nearest whole number PZN conditions) (Sections 4 1 2.4 and 4.2 4, Tables 4-6 and 4-10) $CN_{1\,0\text{ or }10}$ 83 $CN_X$ 84 $CN_{2\,0\text{ or }50}$ 93

Watershed Length (L) (Section 4.3 1) .80 – miles

Length to Centroid ($L_c$) (Section 4 3.1) .38 – miles

Slope (s) (Section 4 3 1) 649 9 – feet/mile

Basin $\bar{n}$ Factor (Section 4 3 5) 05

Corps lag ($T_L$) = 24 $\bar{n}$ $((L \times L_c)/s^{0\,5})^m$ (Section 4 3 1 1)
OR
Corps lag ($T_L$) = 0.8 $T_c$ (Section 4 3 1.2)

Lag Time 0 223 – hours

Time to Peak = 0.862 x Corps lag (Section 4 1 5 5)

Time to Peak 0 192 – hours

0.151 – hour

**WORKSHEET 4-3** Harmony Grove Village (name of project) **Peak Discharge Computation**

*****For use with NRCS Hydrologic Method Computations*****

Items in boxes are required input parameters for the SDUH Peak Discharge Program

Computed by Rick Engineering Company Date 12/12/05

Project Identification (Drainage Area Name) Pre Project Basin 1

Geographic location of center of drainage area Long ____ " Lat ____ "

Drainage Area 1.29 – square miles

Storm Frequency (Section 2 3) 10 – year

6-Hour Storm Duration Precipitation (Appendix B) 2.1 – inches

24-Hour Storm Duration Precipitation (Appendix B) 3.6 – inches

Precipitation Zone Number (PZN) (Section 4 1 2 4 and Appendix C) PZN = 1 0 1.6 2 0 ____ 3 0 ____ 4 0

LESS THAN A ~~5-year to~~ PZN Ajustment Factor for 35-year storm frequency (interpolate) (Section 4 1 2 4 and Table 4-6) 1 5 2.1 2 5 ____ 2 0 ____ 1 5

PZN Ajustment Factor for 35-year to 150-year storm frequency (interpolate) (Section 4 1 2 4 and Table 4-6) 2 0 ____ 3 0 ____ 3 0 ____ 2 0

PZN Adjusted Runoff Curve Number (interpolate between nearest whole number PZN conditions) (Sections 4 1 2 4 and 4 2 4, Tables 4-6 and 4-10) $CN_{1\,0\,or\,2\,0}$ 73 $CN_X$ 74 $CN_{2\,0\,or\,3\,0}$ 87

Watershed Length (L) (Section 4 3 1) 1.48 – miles

Length to Centroid ($L_c$) (Section 4 3 1) 0.81 – miles

Slope (s) (Section 4 3 1) 60.9 – feet/mile

Basin $\bar{n}$ Factor (Section 4 3 5) 0.05

Corps lag ($T_L$) = 24 $\bar{n}$ $((L \times L_c)/s^{0\,5})^m$ (Section 4 3 1 1)
OR
Corps lag ($T_L$) = 0 8 $T_c$ (Section 4 3 1.2)

Lag Time 0 59 – hours

Time to Peak = 0 862 x Corps lag (Section 4 1 5 5)

Time to Peak 0.51 – hours

NRCS $T_L$ 0 466 - hour

**WORKSHEET 4-3** Harmony Grove Village (name of project) **Peak Discharge Computation**

*****For use with NRCS Hydrologic Method Computations*****

Items in boxes are required input parameters for the SDUH Peak Discharge Program

Computed by Rick Engineering Company Date 12/12/05

Project Identification (Drainage Area Name): Pre Project Basin 2

Geographic location of center of drainage area: Long: ____ " Lat ____ "

Drainage Area 0.28 – square miles

Storm Frequency (Section 2 3) 10 – year

6-Hour Storm Duration Precipitation (Appendix B) 2.1 – inches

24-Hour Storm Duration Precipitation (Appendix B) 3.6 – inches

Precipitation Zone Number (PZN) (Section 4 1.2 4 and Appendix C) PZN = 1.0 1.6 20 ____ 30 ____ 40

LESS THAN A ~~5-year to~~ PZN Ajustment Factor for 35-year storm frequency (interpolate) (Section 4 1 2 4 and Table 4-6) 15 2 1 25 ____ 20 ____ 15

PZN Ajustment Factor for 35-year to 150-year storm frequency (interpolate) (Section 4 1 2 4 and Table 4-6) 20 ____ 30 ____ 30 ____ 20

PZN Adjusted Runoff Curve Number (interpolate between nearest whole number PZN conditions) (Sections 4 1.2 4 and 4 2 4, Tables 4-6 and 4-10) $CN_{10 \text{ or } 20}$ 85 $CN_X$ 86 $CN_{20 \text{ or } 30}$ 94

Watershed Length (L) (Section 4 3.1) 0 76 – miles

Length to Centroid ($L_c$) (Section 4 3 1) 0 25 – miles

Slope (s) (Section 4 3 1) 290 4 – feet/mile

Basin $\bar{n}$ Factor (Section 4 3.5) 0 05

Corps lag ($T_L$) = 24 $\bar{n}$ $((L \times L_c)/s^{0.5})^m$ (Section 4 3.1 1)
OR
Corps lag ($T_L$) = 0 8 $T_c$ (Section 4 3 1 2)

Lag Time 0.217 – hours

Time to Peak = 0 862 x Corps lag (Section 4 1 5.5)

Time to Peak 0 187 – hours

NRCS $T_L$ 0.146 - hour

**WORKSHEET 4-3** Harmony Grove Village (name of project) **Peak Discharge Computation**

*****For use with NRCS Hydrologic Method Computations*****

Items in boxes are required input parameters for the SDUH Peak Discharge Program

Computed by _____ Date _____

Project Identification (Drainage Area Name) Pre Project Basin 3

Geographic location of center of drainage area Long _____ " Lat _____ "

Drainage Area 0.19 – square miles

Storm Frequency (Section 2 3) 10 – year

6-Hour Storm Duration Precipitation (Appendix B) 2.1 – inches

24-Hour Storm Duration Precipitation (Appendix B) 3.6 – inches

Precipitation Zone Number (PZN) (Section 4 1.2 4 and Appendix C) PZN = 1.0 1.6 2 0 ____ 3 0 ____ 4 0

LESS THAN A ~~5 year to~~ PZN Ajustment Factor for 35-year storm frequency (interpolate) (Section 4 1 2 4 and Table 4-6) 1 5 2 1 2 5 ____ 2 0 ____ 1 5

PZN Ajustment Factor for 35-year to 150-year storm frequency (interpolate) (Section 4 1 2 4 and Table 4-6) 2 0 ____ 3 0 ____ 3 0 ____ 2 0

PZN Adjusted Runoff Curve Number (interpolate between nearest whole number PZN conditions) (Sections 4 1 2.4 and 4 2 4, Tables 4-6 and 4-10) $CN_{10 \text{ or } 20}$ 73 $CN_X$ 74 $CN_{20 \text{ or } 30}$ 87

Watershed Length (L) (Section 4 3 1) 0.66 – miles

Length to Centroid ($L_c$) (Section 4 3 1) 0.27 – miles

Slope (s) (Section 4 3 1) 776.9 – feet/mile

Basin $\bar{n}$ Factor (Section 4 3 5) 0 05

Corps lag ($T_L$) = 24 $\bar{n}$ $((L \times L_c)/s^{0.5})^m$ (Section 4 3 1.1)
OR
Corps lag ($T_L$) = 0 8 $T_c$ (Section 4 3 1.2)

Lag Time 0.176 – hours

Time to Peak = 0 862 x Corps lag (Section 4 1 5.5)

Time to Peak 0 152 – hours

NRCS $T_L$ 0.11 – hours

**WORKSHEET 4-3** Harmony Grove Village (name of project) **Peak Discharge Computation**

*****For use with NRCS Hydrologic Method Computations*****

Items in boxes are required input parameters for the SDUH Peak Discharge Program.

Computed by: Rick Engineering Company Date. 12/12/05

Project Identification (Drainage Area Name) Pre Project Basin 4

Geographic location of center of drainage area. Long. ____ " Lat. ____ "

Drainage Area 0.18 – square miles

Storm Frequency (Section 2 3) 10 – year

6-Hour Storm Duration Precipitation (Appendix B) 2.1 – inches

24-Hour Storm Duration Precipitation (Appendix B) 3 6 – inches

Precipitation Zone Number (PZN). (Section 4 1.2 4 and Appendix C) PZN = 1 0 1.6 2 0 ____ 3 0 ____ 4 0

LESS THAN A ~~5-year to~~ PZN Ajustment Factor for 35-year storm frequency (interpolate) (Section 4 1 2 4 and Table 4-6) 1 5 2.1 2 5 ____ 2 0 ____ 1 5

PZN Ajustment Factor for 35-year to 150-year storm frequency (interpolate) (Section 4 1 2 4 and Table 4-6) 2 0 ____ 3 0 ____ 3 0 ____ 2 0

PZN Adjusted Runoff Curve Number (interpolate between nearest whole number PZN conditions) (Sections 4 1 2 4 and 4 2 4, Tables 4-6 and 4-10) $CN_{1 0 \text{ or } 6 0}$ 76 $CN_x$ 77 $CN_{2 0 \text{ or } 8 0}$ 89

Watershed Length (L) (Section 4 3 1) 0.76 – miles

Length to Centroid ($L_c$) (Section 4 3 1) 0.40 – miles

Slope (s) (Section 4 3 1) 488.4 – feet/mile

Basin $\bar{n}$ Factor (Section 4 3.5) 0.05

Corps lag ($T_L$) = 24 $\bar{n}$ $((L \times L_c)/s^{0 5})^m$ (Section 4 3 1 1)
OR
Corps lag ($T_L$) = 0 8 $T_c$ (Section 4 3 1 2)

Lag Time 0.235 – hours

Time to Peak = 0 862 x Corps lag (Section 4 1 5 5)

Time to Peak 0.203 – hours

NRCS ($T_L$) 0.161 hour

**WORKSHEET 4-3** Harmony Grove Village (name of project) **Peak Discharge Computation**

*****For use with NRCS Hydrologic Method Computations*****

Items in boxes are required input parameters for the SDUH Peak Discharge Program

Computed by Rick Engineering Company Date. 12/12/05

Project Identification (Drainage Area Name): Pre Project Basin 5

Geographic location of center of drainage area: Long: _____ " Lat. _____ "

Drainage Area 0 19 – square miles

Storm Frequency (Section 2 3) 10 – year

6-Hour Storm Duration Precipitation (Appendix B) 2 1 – inches

24-Hour Storm Duration Precipitation (Appendix B) 3.6 – inches

Precipitation Zone Number (PZN) (Section 4 1 2 4 and Appendix C) PZN = 1.0 1.6 2.0 ____ 3 0 ____ 4 0

LESS THAN A PZN Ajustment Factor for ~~5-year to~~ 35-year storm frequency (interpolate) (Section 4 1 2 4 and Table 4-6) 1 5 2.1 2 5 ____ 2 0 ____ 1 5

PZN Ajustment Factor for 35-year to 150-year storm frequency (interpolate) (Section 4.1 2 4 and Table 4-6) 2 0 ____ 3 0 ____ 3 0 ____ 2 0

PZN Adjusted Runoff Curve Number (interpolate between nearest whole number PZN conditions) (Sections 4 1 2 4 and 4 2 4, Tables 4-6 and 4-10) $CN_{1\,0\text{ or }2\,0}$ 84 $CN_x$ 85 $CN_{2\,0\text{ or }1\,0}$ 93

Watershed Length (L) (Section 4 3 1) 0.95 – miles

Length to Centroid ($L_c$) (Section 4 3 1) 0.47 – miles

Slope (s) (Section 4 3 1) 992.6 – feet/mile

Basin $\bar{n}$ Factor (Section 4 3.5) 0 05

Corps lag ($T_L$) = 24 $\bar{n}$ $((L \times L_c)/s^{0\,5})^m$ (Section 4 3 1 1)
OR
Corps lag ($T_L$) = 0 8 $T_c$ (Section 4 3 1 2)

Lag Time. 0.238 – hours

Time to Peak = 0 862 x Corps lag (Section 4 1 5 5)

Time to Peak 0 205 – hours

NRCS ($T_L$) 0.164 – hour

**WORKSHEET 4-3** Harmony Grove Village (name of project) **Peak Discharge Computation**

*****For use with NRCS Hydrologic Method Computations*****

Items in boxes are required input parameters for the SDUH Peak Discharge Program

Computed by Rick Engineering Company Date: 12/12/05

Project Identification (Drainage Area Name): Pre Project Basin 6

Geographic location of center of drainage area. Long: _____ " Lat: _____ "

Drainage Area 0.06 – square miles

Storm Frequency (Section 2 3) 10 – year

6-Hour Storm Duration Precipitation (Appendix B) 2 1 – inches

24-Hour Storm Duration Precipitation (Appendix B) 3.6 – inches

Precipitation Zone Number (PZN) (Section 4 1 2 4 and Appendix C) PZN = 1.0 1.6 2.0 ____ 3 0 ____ 4 0

LESS THAN A PZN Ajustment Factor for ~~5-year to~~ 35-year storm frequency (interpolate) (Section 4 1 2 4 and Table 4-6) 1 5 2 1 2 5 ____ 2 0 ____ 1 5

PZN Ajustment Factor for 35-year to 150-year storm frequency (interpolate) (Section 4 1 2 4 and Table 4-6) 2 0 ____ 3 0 ____ 3 0 ____ 2 0

PZN Adjusted Runoff Curve Number (interpolate between nearest whole number PZN conditions) (Sections 4 1.2 4 and 4 2 4, Tables 4-6 and 4-10) $CN_{1\ 0\ or\ 2\ 0}$ 79 $CN_x$ 80 $CN_{2\ 0\ or\ 3\ 0}$ 91

Watershed Length (L) (Section 4 3 1) 0.47 – miles

Length to Centroid ($L_c$) (Section 4 3 1) 0 32 – miles

Slope (s) (Section 4 3 1) 211 2 – feet/mile

Basin $\bar{n}$ Factor (Section 4 3 5) 0 05

Corps lag ($T_L$) = 24 $\bar{n}$ $((L \times L_c)/s^{0\ 5})^m$ (Section 4 3 1.1)
OR
Corps lag ($T_L$) = 0 8 $T_c$ (Section 4 3 1 2)

Lag Time. 0.211 – hours

Time to Peak = 0 862 x Corps lag (Section 4 1 5.5)

Time to Peak 0.182 – hours

NRCS $_{TL}$ 0140 – hour

**WORKSHEET 4-3** Harmony Grove Village **Peak Discharge Computation**
(name of project)

*****For use with NRCS Hydrologic Method Computations*****

Items in boxes are required input parameters for the SDUH Peak Discharge Program

Computed by Rick Engineering Company Date 12/12/05

Project Identification (Drainage Area Name) Pre project · Basin 7

Geographic location of center of drainage area Long ____ " Lat: ____ "

Drainage Area 0.56 – square miles

Storm Frequency (Section 2 3) 10 – year

6-Hour Storm Duration Precipitation (Appendix B) 2.1 – inches

24-Hour Storm Duration Precipitation (Appendix B) 3.6 – inches

Precipitation Zone Number (PZN) (Section 4.1.2 4 and Appendix C) PZN = 1.0 1.6 2.0 ____ 3 0 ____ 4 0

LESS THAN A ~~5 year to~~ PZN Ajustment Factor for 35-year storm frequency (interpolate) (Section 4 1 2 4 and Table 4-6) 1 5 2.1 2 5 ____ 2.0 ____ 1 5

PZN Ajustment Factor for 35-year to 150-year storm frequency (interpolate) (Section 4 1 2 4 and Table 4-6) 2 0 ____ 3 0 ____ 3 0 ____ 2 0

PZN Adjusted Runoff Curve Number (interpolate between nearest whole number PZN conditions) (Sections 4 1 2 4 and 4 2 4, Tables 4-6 and 4-10) $CN_{1\,0\text{ or }2\,0}$ 83 $CN_X$ 84 $CN_{2\,0\text{ or }3\,0}$ 93

Watershed Length (L) (Section 4 3 1) 1.29 – miles

Length to Centroid ($L_c$) (Section 4 3 1) 0 61 – miles

Slope (s) (Section 4 3 1) 829.3 – feet/mile

Basin $\bar{n}$ Factor (Section 4 3 5) 0.05

Corps lag ($T_L$) = 24 $\bar{n}$ $((L \times L_c)/s^{0\,5})^m$ (Section 4 3 1 1)
OR
Corps lag ($T_L$) = 0 8 $T_c$ (Section 4 3 1 2)

Lag Time 0 306 – hours

Time to Peak = 0 862 x Corps lag (Section 4 1 5.5)

Time to Peak 0.263 – hours

NRCS $T_L$ 0.222 hour

**WORKSHEET 4-3** Harmony Grove Village (name of project) **Peak Discharge Computation**

*****For use with NRCS Hydrologic Method Computations*****

Items in boxes are required input parameters for the SDUH Peak Discharge Program

Computed by Rick Engineering Company Date 12/12/03

Project Identification (Drainage Area Name) Pre Project Basin 8

Geographic location of center of drainage area: Long ____ " Lat. ____ "

Drainage Area 0.05 – square miles

Storm Frequency (Section 2 3) 10 – year

6-Hour Storm Duration Precipitation (Appendix B) 2.1 – inches

24-Hour Storm Duration Precipitation (Appendix B) 3.6 – inches

Precipitation Zone Number (PZN) (Section 4 1.2 4 and Appendix C) PZN = 1 0 1.6 2.0 ____ 3 0 ____ 4 0

LESS THAN A ~~5 year to~~ PZN Ajustment Factor for 35-year storm frequency (interpolate) (Section 4 1 2 4 and Table 4-6) 1 5 2 1 2 5 ____ 2 0 ____ 1 5

PZN Ajustment Factor for 35-year to 150-year storm frequency (interpolate) (Section 4 1 2 4 and Table 4-6) 2 0 ____ 3 0 ____ 3 0 ____ 2 0

PZN Adjusted Runoff Curve Number (interpolate between nearest whole number PZN conditions) (Sections 4 1 2 4 and 4 2.4, Tables 4-6 and 4-10) $CN_{1\,0\,or\,2\,0}$ 84 $CN_x$ 85 $CN_{2\,0\,or\,3\,0}$ 93

Watershed Length (L) (Section 4 3 1) 0.28 – miles

Length to Centroid ($L_c$) (Section 4 3.1) 0.19 – miles

Slope (s) (Section 4 3 1) 176 0 – feet/mile

Basin $\bar{n}$ Factor (Section 4 3.5) 0.05

Corps lag ($T_L$) = 24 $\bar{n}$ $((L \times L_c)/s^{0\,5})^m$ (Section 4 3 1.1)
OR
Corps lag ($T_L$) = 0 8 $T_c$ (Section 4 3 1.2)

Lag Time 0.147 – hours

Time to Peak = 0 862 x Corps lag (Section 4 1 5 5)

Time to Peak 0.127 – hours

0.085 - hour

**WORKSHEET 4-3** Harmony Grove Village (name of project) **Peak Discharge Computation**

*****For use with NRCS Hydrologic Method Computations*****

Items in boxes are required input parameters for the SDUH Peak Discharge Program.

Computed by Rick Engineering Company Date: 12/12/05

Project Identification (Drainage Area Name) Pre Project · Basin 9

Geographic location of center of drainage area: Long _____ " Lat: _____ "

Drainage Area: 0.04 – square miles

Storm Frequency (Section 2 3) 10 – year

6-Hour Storm Duration Precipitation (Appendix B) 2.1 – inches

24-Hour Storm Duration Precipitation (Appendix B) 3.6 – inches

Precipitation Zone Number (PZN) (Section 4.1.2 4 and Appendix C) PZN = 1 0 1.6 2.0 ____ 3 0 ____ 4 0

LESS THAN A ~~5-year to~~ PZN Ajustment Factor for 35-year storm frequency (interpolate) (Section 4 1 2 4 and Table 4-6) 1 5 2.1 2 5 ____ 2.0 ____ 1 5

PZN Ajustment Factor for 35-year to 150-year storm frequency (interpolate) (Section 4.1 2 4 and Table 4-6) 2 0 ____ 3 0 ____ 3 0 ____ 2 0

PZN Adjusted Runoff Curve Number (interpolate between nearest whole number PZN conditions) (Sections 4 1 2 4 and 4 2 4, Tables 4-6 and 4-10) $CN_{1\,0\,or\,2\,0}$ 90 $CN_X$ 91 $CN_{2\,0\,or\,3\,0}$ 96

Watershed Length (L) (Section 4.3 1) 0 23 – miles

Length to Centroid ($L_c$) (Section 4 3.1) 0.13 – miles

Slope (s) (Section 4 3 1) 44.0 – feet/mile

Basin $\bar{n}$ Factor (Section 4 3.5) 0.05

Corps lag ($T_L$) = 24 $\bar{n}$ $((L \times L_c)/s^{0\,5})^m$ (Section 4 3 1 1)
OR
Corps lag ($T_L$) = 0 8 $T_c$ (Section 4 3 1 2)

Lag Time: 0 154 – hours

Time to Peak = 0 862 x Corps lag (Section 4 1 5 5)

Time to Peak 0.133 – hours

0.091 – hour

**WORKSHEET 4-3** Harmony Grove Village **Peak Discharge Computation**
(name of project)

*****For use with NRCS Hydrologic Method Computations*****

Items in boxes are required input parameters for the SDUH Peak Discharge Program

Computed by Rick Engineering Company Date 12/14/05

Project Identification (Drainage Area Name) Pre - Project Basin 10

Geographic location of center of drainage area Long ____ " Lat ____ "

Drainage Area 0.13 – square miles

Storm Frequency (Section 2 3) 10 – year

6-Hour Storm Duration Precipitation (Appendix B) 2 1 – inches

24-Hour Storm Duration Precipitation (Appendix B) 3.6 – inches

Precipitation Zone Number (PZN) (Section 4 1 2 4 and Appendix C) PZN = 1 0 1 6 2 0 ____ 3 0 ____ 4 0

PZN Ajustment Factor for ~~5-year to~~ 35-year storm frequency (interpolate) (Section 4 1 2 4 and Table 4-6) 1 5 2.1 2 5 ____ 2 0 ____ 1 5

LESS THAN A

PZN Ajustment Factor for 35-year to 150-year storm frequency (interpolate) (Section 4 1 2 4 and Table 4-6) 2 0 ____ 3 0 ____ 3 0 ____ 2 0

PZN Adjusted Runoff Curve Number (interpolate between nearest whole number PZN conditions) (Sections 4 1 2 4 and 4 2 4, Tables 4-6 and 4-10) $CN_{1\,0\text{ or }2\,0}$ 83 $CN_X$ 84 $CN_{2\,0\text{ or }3\,0}$ 93

Watershed Length (L) (Section 4 3 1) .80 – miles

Length to Centroid ($L_c$) (Section 4 3 1) .38 – miles

Slope (s) (Section 4 3 1) 644.9 – feet/mile

Basin $\bar{n}$ Factor (Section 4 3 5) .05

Corps lag ($T_L$) = 24 $\bar{n}$ $((L \times L_c)/s^{0\,5})^m$ (Section 4 3 1 1)
OR
Corps lag ($T_L$) = 0 8 $T_c$ (Section 4 3 1 2)

Lag Time 0 223 – hours

Time to Peak = 0 862 x Corps lag (Section 4 1 5 5)

Time to Peak 0.192 – hours

$NRCS_{(TL)}$ 0 151 – hours

Basin 1



**WORKSHEET 4-3** Harmony Grove Village (name of project) **Peak Discharge Computation**

*****For use with NRCS Hydrologic Method Computations*****

Items in boxes are required input parameters for the SDUH Peak Discharge Program

Computed by Rick Engineering Company Date 12/8/05

Project Identification (Drainage Area Name) Pre - Project Basin 1

Geographic location of center of drainage area Long _____ " Lat _____ "

Drainage Area 1.29 – square miles

Storm Frequency (Section 2 3) 100 – year

6-Hour Storm Duration Precipitation (Appendix B) 3 3 – inches

24-Hour Storm Duration Precipitation (Appendix B) 5.7 – inches

Precipitation Zone Number (PZN) (Section 4 1 2 4 and Appendix C) PZN = 1 0 1 6 2 0 ____ 3 0 ____ 4 0

LESS THAN A ~~5 year to~~ PZN Ajustment Factor for 35-year storm frequency (interpolate) (Section 4 1 2 4 and Table 4-6) 1 5 ____ 2 5 ____ 2 0 ____ 1 5

PZN Ajustment Factor for 35-year to 150-year storm frequency (interpolate) (Section 4 1 2 4 and Table 4-6) 2 0 2 6 3 0 ____ 3 0 ____ 2 0

= 1

PZN Adjusted Runoff Curve Number (interpolate between nearest whole number PZN conditions) (Sections 4 1 2 4 and 4 2 4, Tables 4-6 and 4-10) $CN_{10 \text{ or } 20}$ 73 $CN_X$ 81 $CN_{20 \text{ or } 30}$ 87

(87 - 73) 60 + 73 =

Watershed Length (L) (Section 4 3 1) 1.48 – miles

Length to Centroid ($L_c$) (Section 4 3 1) 0.81 – miles

710 - 620 / 1.48

Slope (s) (Section 4 3 1) 60 9 – feet/mile Basin $\bar{n}$ Factor (Section 4 3 5) 0.05

Corps lag ($T_L$) = 24 $\bar{n}$ $((L \times L_c)/s^{0.5})^m$ (Section 4 3 1 1) m = .38 for 2003 San Diego

OR

Corps lag ($T_L$) = 0 8 $T_c$ (Section 4 3 1 2) Lag Time 0.59 – hours

Time to Peak = 0 862 x Corps lag (Section 4 1 5 5) Time to Peak 0.51 – hours

NRCS ($T_L$) = $T_p - \frac{D}{2}$ (San Diego 2003 D = 5 min) NRCS($T_L$) 0.466 – hours

Basin 2



**WORKSHEET 4-3** Harmony Grove Village **Peak Discharge Computation**
(name of project)

*****For use with NRCS Hydrologic Method Computations*****

Items in boxes are required input parameters for the SDUH Peak Discharge Program

Computed by Rick Engineering Company Date 12/8/05

Project Identification (Drainage Area Name) Pre-Project Basin 2

Geographic location of center of drainage area Long ____ " Lat ____ "

Drainage Area 0.28 – square miles

Storm Frequency (Section 2 3) 100 – year

6-Hour Storm Duration Precipitation (Appendix B) 3 3 – inches

24-Hour Storm Duration Precipitation (Appendix B) 5.7 – inches

Precipitation Zone Number (PZN) (Section 4 1 2 4 and Appendix C) PZN = 1 0 1 6 2 0 ____ 3 0 ____ 4 0

LESS THAN A ~~5-year to~~ PZN Ajustment Factor for 35-year storm frequency (interpolate) (Section 4 1 2 4 and Table 4-6) 1 5 ____ 2 5 ____ 2 0 ____ 1 5

PZN Ajustment Factor for 35-year to 150-year storm frequency (interpolate) (Section 4 1 2 4 and Table 4-6) 2 0 2 6 3 0 ____ 3 0 ____ 2 0

PZN Adjusted Runoff Curve Number (interpolate between nearest whole number PZN conditions) (Sections 4 1 2 4 and 4 2 4, Tables 4-6 and 4-10) $CN_{10 \text{ or } 20}$ 85 $CN_X$ 90 $CN_{20 \text{ or } 30}$ 94

Watershed Length (L) (Section 4 3 1) 0.76 – miles

Length to Centroid ($L_c$) (Section 4 3 1) 0.25 – miles

$\frac{790 - 570}{0.76}$

Slope (s) (Section 4 3 1) 290.4 – feet/mile Basin $\bar{n}$ Factor (Section 4 3 5) 0.05

Corps lag ($T_L$) = 24 $\bar{n}$ $((L \times L_c)/s^{0.5})^m$ (Section 4 3 1 1)
OR
Corps lag ($T_L$) = 0 8 $T_c$ (Section 4 3 1 2) Lag Time 0 217 – hours

Time to Peak = 0 862 x Corps lag (Section 4 1 5 5) Time to Peak 0 187 – hours

NRCS($T_L$) = $T_P - \frac{D}{2}$ (San Diego 2003 D = 5 min) NRCS($T_L$): 0146 hour

Basin 3



**WORKSHEET 4-3** Harmony Grove Village (name of project) **Peak Discharge Computation**

*****For use with NRCS Hydrologic Method Computations*****

Items in boxes are required input parameters for the SDUH Peak Discharge Program

Computed by Rick Engineering Company Date 12/8/05

Project Identification (Drainage Area Name) Pre - Project Basin 3

Geographic location of center of drainage area Long ____ " Lat ____ "

Drainage Area 0.19 – square miles

Storm Frequency (Section 2 3) 100 – year

6-Hour Storm Duration Precipitation (Appendix B) 3 3 – inches

24-Hour Storm Duration Precipitation (Appendix B) 5.7 – inches

Precipitation Zone Number (PZN) (Section 4 1 2 4 and Appendix C) PZN = 1 0 1 6 2 0 ____ 3 0 ____ 4 0

LESS THAN A ~~5-year to~~ PZN Ajustment Factor for 35-year storm frequency (interpolate) (Section 4 1 2 4 and Table 4-6) 1 5 ____ 2 5 ____ 2 0 ____ 1 5

PZN Ajustment Factor for 35-year to 150-year storm frequency (interpolate) (Section 4 1 2 4 and Table 4-6) 2 0 2 6 3 0 ____ 3 0 ____ 2 0

PZN Adjusted Runoff Curve Number (interpolate between nearest whole number PZN conditions) (Sections 4 1 2 4 and 4 2 4, Tables 4-6 and 4-10) $CN_{10 \text{ or } 20}$ 73 $CN_X$ 81 $CN_{20 \text{ or } 30}$ 87

Watershed Length (L) (Section 4 3 1) 0.66 – miles

Length to Centroid ($L_c$) (Section 4 3 1) 0.27 – miles

$\frac{1325 - 810}{0.66}$

Slope (s) (Section 4 3 1) 776.9 – feet/mile Basin $\bar{n}$ Factor (Section 4 3 5) 0 05

Corps lag ($T_L$) = 24 $\bar{n}$ $((L \times L_c)/s^{0.5})^m$ (Section 4 3 1 1)
OR
Corps lag ($T_L$) = 0 8 $T_c$ (Section 4 3 1 2) Lag Time 0.176 – hours

Time to Peak = 0 862 x Corps lag (Section 4 1 5 5) Time to Peak 0.152 – hours

NRCS ($T_L$) 0 11 – hour

Basin 4



**WORKSHEET 4-3** Harmony Grove Village (name of project) **Peak Discharge Computation**

*****For use with NRCS Hydrologic Method Computations*****

Items in boxes are required input parameters for the SDUH Peak Discharge Program

Computed by Rick Engineering Company Date 12/8/05

Project Identification (Drainage Area Name) Pre - Project Basin 4

Geographic location of center of drainage area Long ____ " Lat ____ "

Drainage Area 0.18 – square miles

Storm Frequency (Section 2 3) 100 – year

6-Hour Storm Duration Precipitation (Appendix B) 3 3 – inches

24-Hour Storm Duration Precipitation (Appendix B) 5 7 – inches

Precipitation Zone Number (PZN) (Section 4 1 2 4 and Appendix C) PZN = 1 0 1 6 2 0 ____ 3 0 ____ 4 0

LESS THAN A ~~5-year to~~ PZN Ajustment Factor for 35-year storm frequency (interpolate) (Section 4 1 2 4 and Table 4-6) 1 5 ____ 2 5 ____ 2 0 ____ 1 5

PZN Ajustment Factor for 35-year to 150-year storm frequency (interpolate) (Section 4 1 2 4 and Table 4-6) 2 0 2.6 3 0 ____ 3 0 ____ 2 0

PZN Adjusted Runoff Curve Number (interpolate between nearest whole number PZN conditions) (Sections 4 1 2 4 and 4 2 4, Tables 4-6 and 4-10) $CN_{10 \text{ or } 20}$ 76 $CN_X$ 84 $CN_{20 \text{ or } 30}$ 89

Watershed Length (L) (Section 4 3 1) 0.76 – miles

Length to Centroid ($L_c$) (Section 4 3 1) 0.40 – miles

040 - 670
0.76

Slope (s) (Section 4 3 1) 488.4 – feet/mile Basin $\bar{n}$ Factor (Section 4 3 5) 0.05

Corps lag ($T_L$) = 24 $\bar{n}$ $((L \times L_c)/s^{0.5})^m$ (Section 4 3 1 1)
OR
Corps lag ($T_L$) = 0 8 $T_c$ (Section 4 3 1 2) Lag Time 0.235 – hours

Time to Peak = 0 862 x Corps lag (Section 4 1 5 5) Time to Peak 0.203 – hours

NRCS ($T_L$): 0.161 – hour

Basin 5



**WORKSHEET 4-3** Harmony Grove Village **Peak Discharge Computation**
(name of project)

*****For use with NRCS Hydrologic Method Computations*****

Items in boxes are required input parameters for the SDUH Peak Discharge Program

Computed by Rick Engineering Company Date 12/8/05

Project Identification (Drainage Area Name) Pre- Project Basin 5

Geographic location of center of drainage area Long _____ " Lat _____ "

Drainage Area 0.19 – square miles

Storm Frequency (Section 2 3) 100 – year

6-Hour Storm Duration Precipitation (Appendix B) 33 – inches

24-Hour Storm Duration Precipitation (Appendix B) 57 – inches

Precipitation Zone Number (PZN) (Section 4 1 2 4 and Appendix C) PZN = 10 16 20 ____ 30 ____ 40

PZN Ajustment Factor for ~~5-year to~~ 35-year storm frequency (interpolate) (Section 4 1 2 4 and Table 4-6) 15 ____ 25 ____ 20 ____ 15

LESS THAN A

PZN Ajustment Factor for 35-year to 150-year storm frequency (interpolate) (Section 4 1 2 4 and Table 4-6) 20 26 30 ____ 30 ____ 20

PZN Adjusted Runoff Curve Number (interpolate between nearest whole number PZN conditions) (Sections 4 1 2 4 and 4 2 4, Tables 4-6 and 4-10) $CN_{10 \text{ or } 20}$ 84 $CN_x$ 89 $CN_{20 \text{ or } 30}$ 93

Watershed Length (L) (Section 4 3 1) 0.95 – miles

Length to Centroid ($L_c$) (Section 4 3 1) 0.47 – miles

1610 − 670 / 0.95

Slope (s) (Section 4 3 1) 992.6 – feet/mile

Basin $\bar{n}$ Factor (Section 4 3 5) 0.05

Corps lag ($T_L$) = 24 $\bar{n}$ $((L \times L_c)/s^{0.5})^m$ (Section 4 3 1 1)
OR
Corps lag ($T_L$) = 0 8 $T_c$ (Section 4 3 1 2)

Lag Time 0.238 – hours

Time to Peak = 0 862 x Corps lag (Section 4 1 5 5)

Time to Peak 0 205 – hours

NRCS ($T_L$) 0.164 – hours

Basin 6



**WORKSHEET 4-3** Harmony Grove Village (name of project) **Peak Discharge Computation**

*****For use with NRCS Hydrologic Method Computations*****

Items in boxes are required input parameters for the SDUH Peak Discharge Program

Computed by Rick Engineering Company Date 12/8/05

Project Identification (Drainage Area Name) Pre - Project Basin 6

Geographic location of center of drainage area Long ____ " Lat ____ "

Drainage Area 0.06 – square miles

Storm Frequency (Section 2 3) 100 – year

6-Hour Storm Duration Precipitation (Appendix B) 3 3 – inches

24-Hour Storm Duration Precipitation (Appendix B) 5 7 – inches

Precipitation Zone Number (PZN) (Section 4 1 2 4 and Appendix C) PZN = 1 0 1 6 2 0 ____ 3 0 ____ 4 0

LESS THAN A ~~5-year to~~ PZN Ajustment Factor for 35-year storm frequency (interpolate) (Section 4 1 2 4 and Table 4-6) 1 5 ____ 2 5 ____ 2 0 ____ 1 5

PZN Ajustment Factor for 35-year to 150-year storm frequency (interpolate) (Section 4 1 2 4 and Table 4-6) 2 0 2 6 3 0 ____ 3 0 ____ 2 0

PZN Adjusted Runoff Curve Number (interpolate between nearest whole number PZN conditions) (Sections 4 1 2 4 and 4 2 4, Tables 4-6 and 4-10) $CN_{1\,0\,or\,2\,0}$ 79 $CN_X$ 86 $CN_{2\,0\,or\,3\,0}$ 91

Watershed Length (L) (Section 4 3 1) 0 47 – miles

Length to Centroid ($L_c$) (Section 4 3 1) 0.32 – miles

$\frac{670-570}{0.47}$

Slope (s) (Section 4 3 1) 211 2 – feet/mile Basin $\bar{n}$ Factor (Section 4 3 5) 0.05

Corps lag ($T_L$) = 24 $\bar{n}$ $((L \times L_c)/s^{0\,5})^m$ (Section 4 3 1 1)
OR
Corps lag ($T_L$) = 0 8 $T_c$ (Section 4 3 1 2) Lag Time 0 211 – hours

Time to Peak = 0 862 x Corps lag (Section 4 1 5 5) Time to Peak 0 182 – hours

NRCS ($T_L$) 0 140 - hour

Basin 7



**WORKSHEET 4-3** Harmony Grove Village **Peak Discharge Computation**
(name of project)

*****For use with NRCS Hydrologic Method Computations*****

Items in boxes are required input parameters for the SDUH Peak Discharge Program

Computed by Rick Engineering Company Date 12/8/05

Project Identification (Drainage Area Name) Pre - Project Basin 7

Geographic location of center of drainage area Long ____ " Lat ____ "

Drainage Area 0.56 – square miles

Storm Frequency (Section 2 3) 100 – year

6-Hour Storm Duration Precipitation (Appendix B) 3 3 – inches

24-Hour Storm Duration Precipitation (Appendix B) 5 7 – inches

Precipitation Zone Number (PZN) (Section 4 1 2 4 and Appendix C) PZN = 1 0 1.6 2 0 ____ 3 0 ____ 4 0

LESS THAN A ~~5 year to~~ PZN Ajustment Factor for 35-year storm frequency (interpolate) (Section 4 1 2 4 and Table 4-6) 1 5 ____ 2 5 ____ 2 0 ____ 1 5

PZN Ajustment Factor for 35-year to 150-year storm frequency (interpolate) (Section 4 1 2 4 and Table 4-6) 2 0 2 6 3 0 ____ 3 0 ____ 2 0

PZN Adjusted Runoff Curve Number (interpolate between nearest whole number PZN conditions) (Sections 4 1 2 4 and 4 2 4, Tables 4-6 and 4-10) $CN_{1\,0\,or\,20}$ 83 $CN_X$ 89 $CN_{2\,0\,or\,30}$ 93

Watershed Length (L) (Section 4 3 1) 1.29 – miles

Length to Centroid ($L_c$) (Section 4 3 1) 0.61 – miles

1688 - 620
1.29

Slope (s) (Section 4 3 1) 829.3 – feet/mile Basin $\bar{n}$ Factor (Section 4 3 5) 0.05

Corps lag ($T_L$) = 24 $\bar{n}$ $((L \times L_c)/s^{0\,5})^m$ (Section 4 3 1 1)
OR
Corps lag ($T_L$) = 0 8 $T_c$ (Section 4 3 1 2) Lag Time 0.306 – hours

Time to Peak = 0 862 x Corps lag (Section 4 1 5 5) Time to Peak 0 263 – hours

NRCS($T_L$): 0.222 hour

Basin 8



**WORKSHEET 4-3** Harmony Grove Village (name of project) **Peak Discharge Computation**

*****For use with NRCS Hydrologic Method Computations*****

Items in boxes are required input parameters for the SDUH Peak Discharge Program

Computed by Rick Engineering Company Date 12/8/05

Project Identification (Drainage Area Name) Pre - Project Basin 8

Geographic location of center of drainage area Long ____ " Lat ____ "

Drainage Area 0.05 – square miles

Storm Frequency (Section 2 3) 100 – year

6-Hour Storm Duration Precipitation (Appendix B) 3 3 – inches

24-Hour Storm Duration Precipitation (Appendix B) 5.7 – inches

Precipitation Zone Number (PZN) (Section 4 1 2 4 and Appendix C) PZN = 1 0 1 6 2 0 ____ 3 0 ____ 4 0

LESS THAN A ~~5-year to~~ PZN Ajustment Factor for 35-year storm frequency (interpolate) (Section 4 1 2 4 and Table 4-6) 1 5 ____ 2 5 ____ 2 0 ____ 1 5

PZN Ajustment Factor for 35-year to 150-year storm frequency (interpolate) (Section 4 1 2 4 and Table 4-6) 2 0 2 6 3 0 ____ 3 0 ____ 2 0

PZN Adjusted Runoff Curve Number (interpolate between nearest whole number PZN conditions) (Sections 4 1 2 4 and 4 2 4, Tables 4-6 and 4-10) $CN_{10 \text{ or } 20}$ 84 $CN_X$ 89 $CN_{20 \text{ or } 30}$ 93

Watershed Length (L) (Section 4 3 1) 0 28 – miles

Length to Centroid ($L_c$) (Section 4 3 1) 0.19 – miles

$\frac{620 - 570}{0.28}$

Slope (s) (Section 4 3 1) 1760 – feet/mile Basin $\bar{n}$ Factor (Section 4 3 5) 0.05

Corps lag ($T_L$) = 24 $\bar{n}$ $((L \times L_c)/s^{0.5})^m$ (Section 4 3 1 1)
OR
Corps lag ($T_L$) = 0 8 $T_c$ (Section 4 3 1 2) Lag Time 0.147 – hours

Time to Peak = 0 862 x Corps lag (Section 4 1 5 5) Time to Peak 0.127 – hours

NRCS (TL) 0 085 – hour

Basin 9



**WORKSHEET 4-3** Harmony Grove Village **Peak Discharge Computation**
(name of project)

*****For use with NRCS Hydrologic Method Computations*****

Items in boxes are required input parameters for the SDUH Peak Discharge Program

Computed by Rick Engineering Company Date 12/8/05

Project Identification (Drainage Area Name) Pre- Project Basin 9

Geographic location of center of drainage area Long ____ " Lat ____ "

Drainage Area 0.04 – square miles

Storm Frequency (Section 2 3) 100 – year

6-Hour Storm Duration Precipitation (Appendix B) 3 3 – inches

24-Hour Storm Duration Precipitation (Appendix B) 5.7 – inches

Precipitation Zone Number (PZN) (Section 4 1 2 4 and Appendix C) PZN = 1 0 1 6 2 0 ____ 3 0 ____ 4 0

LESS THAN A ~~5-year to~~ PZN Ajustment Factor for 35-year storm frequency (interpolate) (Section 4 1 2 4 and Table 4-6) 1 5 ____ 2 5 ____ 2 0 ____ 1 5

PZN Ajustment Factor for 35-year to 150-year storm frequency (interpolate) (Section 4 1 2 4 and Table 4-6) 2 0 2 6 3 0 ____ 3 0 ____ 2 0

PZN Adjusted Runoff Curve Number (interpolate between nearest whole number PZN conditions) (Sections 4 1 2 4 and 4 2 4, Tables 4-6 and 4-10) $CN_{10 \text{ or } 20}$ 90 $CN_X$ 94 $CN_{20 \text{ or } 30}$ 96

Watershed Length (L) (Section 4 3 1) 0.23 – miles

Length to Centroid ($L_c$) (Section 4 3 1) 0.13 – miles

$\frac{570 - 560}{0\ 23}$

Slope (s) (Section 4 3 1) 44.0 – feet/mile Basin $\bar{n}$ Factor (Section 4 3 5) 0 05

Corps lag ($T_L$) = 24 $\bar{n}$ $((L \times L_c)/s^{0\ 5})^m$ (Section 4 3 1 1)
OR
Corps lag ($T_L$) = 0 8 $T_c$ (Section 4 3 1 2) Lag Time 0 154 – hours

Time to Peak = 0 862 x Corps lag (Section 4 1 5 5) Time to Peak 0 133 – hours

0.091 hours

**WORKSHEET 4-3** Harmony Grove Village (name of project) **Peak Discharge Computation**

*****For use with NRCS Hydrologic Method Computations*****

Items in boxes are required input parameters for the SDUH Peak Discharge Program

Computed by Rick Engineering Company Date 12/14/05

Project Identification (Drainage Area Name) Pre - Project Basin 10

Geographic location of center of drainage area: Long ____ " Lat ____ "

86 Acres

Drainage Area 0.13 – square miles

Storm Frequency (Section 2 3) 100 – year

6-Hour Storm Duration Precipitation (Appendix B) 3 3 – inches

24-Hour Storm Duration Precipitation (Appendix B) 5.7 – inches

Precipitation Zone Number (PZN) (Section 4 1 2 4 and Appendix C) PZN = 1 0 1.6 ____ 2 0 ____ 3 0 ____ 4 0

LESS THAN A ~~5-year to~~ PZN Ajustment Factor for 35-year storm frequency (interpolate) (Section 4 1 2 4 and Table 4-6) 1 5 ____ 2 5 ____ 2 0 ____ 1 5

PZN Ajustment Factor for 35-year to 150-year storm frequency (interpolate) (Section 4 1.2 4 and Table 4-6) 2 0 2 6 3 0 ____ 3 0 ____ 2 0

PZN Adjusted Runoff Curve Number (interpolate between nearest whole number PZN conditions) (Sections 4 1 2 4 and 4 2 4, Tables 4-6 and 4-10) $CN_{1\,0\text{ or }10}$ 83 $CN_x$ 89 $CN_{2\,0\text{ or }20}$ 93

Watershed Length (L) (Section 4.3 1) 0 8 – miles

Length to Centroid ($L_c$) (Section 4 3 1) 0 38 – miles

$\frac{1073 - 560}{0.80}$

Slope (s) (Section 4 3 1) 644.9 – feet/mile

Basin $\bar{n}$ Factor (Section 4 3.5) 0.05

Corps lag ($T_L$) = 24 $\bar{n}$ $((L \times L_c)/s^{0\,5})^m$ (Section 4 3 1 1)
OR
Corps lag ($T_L$) = 0 8 $T_c$ (Section 4 3 1 2)

Lag Time 0.223 – hours

Time to Peak = 0 862 x Corps lag (Section 4 1.5 5)

Time to Peak 0 192 – hours

NRCS $T_c$ 0 151 - hour

## Table 4-10

## RUNOFF CURVE NUMBERS FOR PZN CONDITIONS 1.0, 2.0, AND 3.0

| CN For | | | CN For | | |
|---|---|---|---|---|---|
| PZN Condition = 1 0 | PZN Condition = 2 0 | PZN Condition = 3 0 | PZN Condition = 1 0 | PZN Condition = 2 0 | PZN Condition = 3 0 |
| 100 | 100 | 100 | 40 | 60 | 78 |
| 97 | 99 | 100 | 39 | 59 | 77 |
| 94 | 98 | 99 | 38 | 58 | 76 |
| 91 | 97 | 99 | 37 | 57 | 75 |
| 89 | 96 | 99 | 37 | 56 | 75 |
| 87 | 95 | 98 | 34 | 55 | 73 |
| 85 | 94 | 98 | 34 | 54 | 73 |
| 83 | 93 | 98 | 33 | 53 | 72 |
| 81 | 92 | 97 | 32 | 52 | 71 |
| 80 | 91 | 97 | 31 | 51 | 70 |
| 78 | 90 | 96 | 31 | 50 | 70 |
| 76 | 89 | 96 | 30 | 49 | 69 |
| 75 | 88 | 95 | 29 | 48 | 68 |
| 73 | 87 | 95 | 28 | 47 | 67 |
| 72 | 86 | 94 | 27 | 46 | 66 |
| 70 | 85 | 94 | 26 | 45 | 65 |
| 68 | 84 | 93 | 25 | 44 | 64 |
| 67 | 83 | 93 | 25 | 43 | 63 |
| 66 | 82 | 92 | 24 | 42 | 62 |
| 64 | 81 | 92 | 23 | 41 | 61 |
| 63 | 80 | 91 | 22 | 40 | 60 |
| 62 | 79 | 91 | 21 | 39 | 59 |
| 60 | 78 | 90 | 21 | 38 | 58 |
| 59 | 77 | 89 | 20 | 37 | 57 |
| 58 | 76 | 89 | 19 | 36 | 56 |
| 57 | 75 | 88 | 18 | 35 | 55 |
| 55 | 74 | 88 | 18 | 34 | 54 |
| 54 | 73 | 87 | 17 | 33 | 53 |
| 53 | 72 | 86 | 16 | 32 | 52 |
| 52 | 71 | 86 | 16 | 31 | 51 |
| 51 | 70 | 85 | 15 | 30 | 50 |
| 50 | 69 | 84 | | | |
| 48 | 68 | 84 | 12 | 25 | 43 |
| 47 | 67 | 83 | 9 | 20 | 37 |
| 46 | 66 | 82 | 6 | 15 | 30 |
| 45 | 65 | 82 | 4 | 10 | 22 |
| 44 | 64 | 81 | 2 | 5 | 13 |
| 43 | 63 | 80 | 0 | 0 | 0 |
| 42 | 62 | 79 | | | |
| 41 | 61 | 78 | | | |

# Post-Project

yyyFile . \sample\HGV_DB1 PPK
yyyTitle DETENTION BASIN 1

| Elevation (ft) | Planimeter (sq in) | Area (acres) | A1+A2+sqr(A1*A2) (acres) | Volume (ac-ft) | Volume Sum (ac-ft) |
|---|---|---|---|---|---|
| 605 80 | ----- | .0000 | 0000 | .000 | 000 |
| 606 00 | ----- | 3300 | 3300 | 022 | 022 |
| 608 00 | ----- | 1 5400 | 2 5829 | 1.722 | 1.744 |
| 610 00 | ----- | 1.6400 | 4 7692 | 3.179 | 4.923 |
| 611 00 | ----- | 1.7100 | 5.0246 | 1.675 | 6.598 |

Elevations With Areas Interpolated From
The Closest Two Planimeter Readings

| Elevation (ft) | Planimeter (sq in) | Area (acres) | A1+A2+sqr(A1*A2) (acres) | Volume (ac-ft) | Volume Sum (ac-ft) |
|---|---|---|---|---|---|
| 607 00 | ----- | 8239 | 1.6754 | .558 | .580 |
| 609 00 | ----- | 1.5896 | 4 6942 | 1 565 | 3 309 |

POND VOLUME EQUATIONS

* Incremental volume computed by the Conic Method for Reservoir Volumes

Volume = (1/3) * (EL2-EL1) * (Area1 + Area2 + sq.rt.(Area1*Area2))

where EL1, EL2 = Lower and upper elevations of the increment
Area1,Area2 = Areas computed for EL1, EL2, respectively
Volume = Incremental volume between EL1 and EL2

Interpolated area from closest two given contour areas
is computed using the relationship

IA = (sq rt(Area1) + ((Ei-E1)/(E2-E1))*(sq.rt(Area2)-sq rt(Area1)))**2

where E1, E2 = Closest two elevations with planimeter data
Ei = Elevation at which to interpolate area
Area1,Area2 = Areas computed for E1, E2, respectively
IA = Interpolated area for Ei

yyyFile .\sample\HGVDB#2 PPK
yyyTitle. HARMONY GROVE VILLAGE DB#2

| Elevation (ft) | Planimeter (sq in) | Area (acres) | A1+A2+sqr(A1*A2) (acres) | Volume (ac-ft) | Volume Sum (ac-ft) |
|---|---|---|---|---|---|
| 613 50 | ----- | 0000 | 0000 | 000 | .000 |
| 614 00 | ----- | .0100 | .0100 | 002 | 002 |
| 616 00 | ----- | 0600 | 0945 | 063 | 065 |
| 618 00 | ----- | .1300 | 2783 | 186 | 250 |
| 620 00 | ----- | 2600 | .5738 | 383 | .633 |
| 622 00 | ----- | 4100 | 9965 | .664 | 1 297 |
| 624 00 | ----- | 6000 | 1 5060 | 1 004 | 2 301 |
| 626 00 | ----- | 8100 | 2 1071 | 1.405 | 3 706 |
| 628 00 | ----- | 1 1000 | 2 8539 | 1 903 | 5 608 |
| 630 00 | ----- | 1 3500 | 3 6686 | 2 446 | 8 054 |

Elevations With Areas Interpolated From
The Closest Two Planimeter Readings

| Elevation (ft) | Planimeter (sq in) | Area (acres) | A1+A2+sqr(A1*A2) (acres) | Volume (ac-ft) | Volume Sum (ac-ft) |
|---|---|---|---|---|---|
| 617 00 | ----- | 0917 | 2258 | 075 | 140 |

POND VOLUME EQUATIONS

* Incremental volume computed by the Conic Method for Reservoir Volumes

Volume = (1/3) * (EL2-EL1) * (Area1 + Area2 + sq rt (Area1*Area2))

where EL1, EL2 = Lower and upper elevations of the increment
Area1,Area2 = Areas computed for EL1, EL2, respectively
Volume = Incremental volume between EL1 and EL2

Interpolated area from closest two given contour areas
is computed using the relationship

IA = (sq rt(Area1) + ((Ei-E1)/(E2-E1))*(sq rt(Area2)-sq rt(Area1)))**2

where E1, E2 = Closest two elevations with planimeter data
Ei = Elevation at which to interpolate area
Area1,Area2 = Areas computed for E1, E2, respectively
IA = Interpolated area for Ei

**Harmony Grove Village**
**J-14312B**
**FN:HEC-1 Analysis**
**12/1/2005**
**revised 12/14/05**

| Basin | Area (acres) | Area (square mile) | Highpoint | low point | Longest Water Coarse (ft) | Longest Water Coarse (mi) | Length of flow path Centorid to Downstream (ft) | Length of flow path Centorid to Downstream (mi) | Slope (ft/mi) | Basin Factor Pre | Basin Factor Post |
|---|---|---|---|---|---|---|---|---|---|---|---|
| 1 | 828 3 | 1 29 | 710 | 620 | 7800 | 1.48 | 4300 | 0.81 | 60 9 | 0 050 | 0 050 |
| 2 | 176 6 | 0 28 | 790 | 570 | 4000 | 0.76 | 1300 | 0 25 | 290 4 | 0 050 | 0 018 |
| 3 | 124 5 | 0.19 | 1325 | 810 | 3500 | 0.66 | 1400 | 0 27 | 776 9 | 0 050 | 0 050 |
| 4 | 112.6 | 0 18 | 1040 | 670 | 4000 | 0.76 | 2100 | 0 40 | 488 4 | 0.050 | 0 018 |
| 5 | 120 5 | 0.19 | 1610 | 670 | 5000 | 0.95 | 2500 | 0 47 | 992 6 | 0.050 | 0 050 |
| 6 | 36.5 | 0.06 | 670 | 570 | 2500 | 0.47 | 1700 | 0.32 | 211.2 | 0.050 | 0 018 |
| 7 | 356 0 | 0.56 | 1688 | 620 | 6800 | 1 29 | 3200 | 0.61 | 829 3 | 0 050 | 0 050 |
| 8 | 29.0 | 0.05 | 620 | 570 | 1500 | 0 28 | 1000 | 0 19 | 176 0 | 0 050 | 0 018 |
| 9 | 28.7 | 0 04 | 570 | 560 | 1200 | 0 23 | 700 | 0 13 | 44.0 | 0 050 | 0 018 |
| 10 | 86 0 | 0.13 | 1073 | 560 | 4200 | 0 80 | 2000 | 0 38 | 644 9 | 0 050 | 0 045 |
| | 1898 7 | 2 97 | | | | | | | | | |

Harmony Grove Village
J-14312B
6-Dec-05 revised 12/14/05
Hec-1 post condition curve numbers
File name HEC-1_120605_post condition

# Post Condition Curve Number Worksheet

| Basin | Hydrologic soil group (per workmap) | Hydrologic Land Use (per workmap) | Hydrologic Land Use | Cover Description (table 4-2) | | Grid Intersection $A_i$ (per workmap) | Fraction of Grid Intersection $A_i/A$ | NRCS Curve Number (CN) for PZN = 2 0 (table 4-2) | Practical CN $(CN_2)(A_i/A)$ |
|---|---|---|---|---|---|---|---|---|---|
| 1 | B | LOW | Low Residential | 1 Acre | | 23 | 0 66 | 68 | 44 7 |
| 1 | B | LIG | Light Industrial | Urban District Industrial | | 1 | 0 03 | 88 | 2 5 |
| 1 | B | COM | Commercial | Urban District Commercial | | 2 | 0 06 | 92 | 5 3 |
| 1 | C | LOW | Low Residential | 1 Acre | | 3 | 0 09 | 79 | 6 8 |
| 1 | C | HCA | Hillside Farmhouse A | 45% impervious | | 1 | 0 03 | 85 | 2 4 |
| 1 | D | LOW | Low Residential | 1 Acre | | 5 | 0 14 | 84 | 12 |
| | | | | | Sum | 35 | 1 | | 74 |
| 2 | C | HCM | Hillside Compound | 73% impervious | | 1 | 0 125 | 92 | 11 5 |
| 2 | C | VCB | Village Court | 62% impervious | | 1 | 0 125 | 89 | 11 1 |
| 2 | D | HCM | Hillside Compound | 73% impervious | | 1 | 0 125 | 93 | 11 6 |
| 2 | D | VCB | Village Court | 62% impervious | | 1 | 0 125 | 91 | 11 4 |
| 2 | D | HCT | Hillside Cottages | 67% impervious | | 1 | 0 125 | 92 | 11 5 |
| 2 | D | LOW | Low Residential | 1 Acre | | 1 | 0 125 | 84 | 10 5 |
| 2 | D | VB | Village Bougalows | 68% impervious | | 1 | 0 125 | 93 | 11 6 |
| 2 | D | VH | Village Homes | 70% impervious | | 1 | 0 125 | 93 | 11 6 |
| | | | | | Sum | 8 | 1 000 | | 91 |
| 3 | B | LOW | Low Residential | 1 Acre | | 4 | 0 67 | 68 | 45 3 |
| 3 | D | LOW | Low Residential | 1 Acre | | 2 | 0 33 | 84 | 28 0 |
| | | | | | | 6 | 1 | | 73 |
| 4 | B | LOW | Low Residential | 1 Acre | | 1 | 0 25 | 68 | 17 0 |
| 4 | B | HFA | Hillside Farmhouse A | 45% impervious | | 1 | 0 25 | 65 | 16 3 |
| 4 | C | GC | Grove Compound | 64% impervious | | 1 | 0 25 | 90 | 22 5 |
| 4 | D | HCM | Hillside Compound | 73% impervious | | 1 | 0 25 | 93 | 23 3 |
| | | | | | Sum | 4 | 1 | | 79 |
| 5 | D | HFB | Hillside Farmhouse B | 66% impervious | | 1 | 0 167 | 92 | 15 3 |
| 5 | D | HCM | Hillside Compound | 73% impervious | | 1 | 0 167 | 93 | 15 5 |
| 5 | D | LOW | Low Residential | 1 Acre | | 4 | 0 667 | 84 | 56 0 |
| | | | | | Sum | 6 | 1 | | 87 |
| 6 | C | HFA | Hillside Farmhouse A | 45% impervious | | 1 | 1 | 85 | 85 0 |
| | | | | | Sum | 1 | | | 85 |
| 7 | C | LOW | Low Residential | 1 Acre | | 2 | 0 13 | 79 | 9 9 |
| 7 | C | HCM | Hillside Compound | 73% impervious | | 1 | 0 06 | 92 | 5 8 |
| 7 | D | HFA | Hillside Farmhouse A | 45% impervious | | 1 | 0 06 | 88 | 5 5 |
| 7 | D | LOW | Low Residential | 1 Acre | | 12 | 0 75 | 84 | 63 0 |
| | | | | | Sum | 16 | 1 | | 84 |
| 8 | D | HCM | Hillside Compound | 73% impervious | | 1 | 1 | 93 | 93 0 |
| | | | | | Sum | 1 | | | 93 |
| 9 | D | VB | Village Bougalows | 68% impervious | | 1 | 0 5 | 93 | 46 5 |
| 9 | D | HCM | Hillside Compound | 73% impervious | | 1 | 0 5 | 93 | 46 5 |
| | | | | | Sum | 2 | 1 | | 93 |
| 10 | C | EQ | Equestrian | Barren | | 1 | 0 25 | 91 | 22 75 |
| 10 | D | Low | Low Residential | 1 Acre | | 3 | 0 75 | 84 | 63 |
| | | | | | Sum | 4 | | | 86 |

Harmony Grove Village
14312B
5-Dec-05
per job note HOUSING STANDARDS 1/9/04from Ray Wong
housing imperviousness

| PRODUCT | MINIMUM LOT SIZE (sq ft) | IMPERVIOUS AREA PAD FOOT PRINT (sq ft) | LOT STREET FRONTAGE (ft) | PARKWAY WIDTH (ft) | SIDEWALK WIDTH (ft) | STREET WIDTH (ft) | % IMPERVIOUS (%) | INTERPOLATED FROM TABLE 4-2 | | | |
|---|---|---|---|---|---|---|---|---|---|---|---|
| | | | | | | | | CN Soil A | CN Soil B | CN Soil C | CN Soil D |
| Grove Farmhouse | 21780 | 7000 | 390 | 4 | 4 | 16 | 48 | 67 | 79 | 86 | 89 |
| Grove Compound | 8800 | 5200 | 88 | 4 | 4 | 16 | 64 | 76 | 85 | 90 | 92 |
| Hillside Farmhouse A | 14520 | 6500 | | | | | 45 | 65 | 78 | 85 | 88 |
| Hillside Farmhouse B | 14520 | 7000 | 251 | | | 30 | 66 | 78 | 85 | 90 | 92 |
| Hillside Compound | 6500 | 4500 | 47 | | | 20 | 73 | 82 | 88 | 92 | 93 |
| Hillside Cottages | 2550 | 1600 | 30 | | | 10 | 67 | 78 | 86 | 90 | 92 |
| Village Homes | 6500 | 4400 | 50 | 5 | | 20 | 70 | 80 | 87 | 91 | 93 |
| Village Cottages | 2550 | 1600 | 30 | 5 | | 20 | 67 | 78 | 86 | 90 | 92 |
| Village Court | 2200 | 1200 | 32 | 4 | 4 | 16 | 62 | 75 | 84 | 89 | 91 |
| Village Bougalows | 4000 | 2600 | 40 | 5 | | 20 | 68 | 79 | 86 | 91 | 93 |
| Live Work | 2550 | 1700 | 30 | 5 | | 20 | 70 | 80 | 87 | 91 | 93 |

## Table 4-2
## RUNOFF CURVE NUMBERS[1] FOR PZN CONDITION = 2.0

| Cover Description | Cover Treatment or Practice[2] | Hydrologic Condition[3] | Average Percent Impervious Area[4] | Curve Numbers for Hydrologic Soil Groups A | B | C | D |
|---|---|---|---|---|---|---|---|
| Developing urban areas and newly graded areas (pervious areas only, no vegetation) | | | | 77 | 86 | 91 | 94 |
| Impervious areas Paved parking lots, roofs, and driveways (excluding right-of-way) | | | | 98 | 98 | 98 | 98 |
| Residential districts by average lot size [4] | | | | | | | |
| 1/8 acre or less (town houses) | | | 65% | 77 | 85 | 90 | 92 |
| 1/4 acre | | | 38% | 61 | 75 | 83 | 87 |
| 1/3 acre | | | 30% | 57 | 72 | 81 | 86 |
| 1/2 acre | | | 25% | 54 | 70 | 80 | 85 |
| 1 acre | | | 20% | 51 | 68 | 79 | 84 |
| 2 acres | | | 12% | 46 | 65 | 77 | 82 |
| Streets and roads | Paved, curbs and storm drains (excluding right-of-way) | | | 98 | 98 | 98 | 98 |
| | Paved, open ditches (including right-of-way) | | | 83 | 89 | 92 | 93 |
| | Gravel (including right-of-way) | | | 76 | 85 | 89 | 91 |
| | Hard surface (including right-of-way) | | | 74 | 84 | 90 | 92 |
| | Dirt (including right-of-way) | | | 72 | 82 | 87 | 89 |
| Urban districts[4] | Commercial and business | | 85% | 89 | 92 | 94 | 95 |
| | Industrial | | 72% | 81 | 88 | 91 | 93 |
| Western desert urban areas | | | | | | | |
| Natural desert landscaping (pervious areas only)[5] | | | | 63 | 77 | 85 | 88 |
| Artificial desert landscaping (impervious weed barrier, desert shrub with 1- to 2-inch sand or gravel mulch and basin borders) | | | | 96 | 96 | 96 | 96 |

## Table 4-2 (Continued)
## RUNOFF CURVE NUMBERS[1] FOR PZN CONDITION = 2.0

| Cover Description | Cover Treatment or Practice[2] | Hydrologic Condition[3] | Average Percent Impervious Area[4] | Curve Numbers for Hydrologic Soil Groups A | B | C | D |
|---|---|---|---|---|---|---|---|
| Small grain | Straight row | Poor | | 65 | 76 | 84 | 88 |
| | | Good | | 63 | 75 | 83 | 87 |
| | Contoured | Poor | | 63 | 74 | 82 | 85 |
| | | Good | | 61 | 73 | 81 | 84 |
| Vineyards[6] | Disked | | | 76 | 85 | 90 | 92 |
| | Annual grass or legume cover | Poor | | 65 | 78 | 85 | 89 |
| | | Fair | | 50 | 69 | 79 | 84 |
| | | Good | | 38 | 61 | 74 | 80 |
| Annual grass (Dryland pasture) | | Poor | | 67 | 78 | 86 | 89 |
| | | Fair | | 50 | 69 | 79 | 84 |
| | | Good | | 38 | 61 | 74 | 80 |
| Barren | | | | 78 | 86 | 91 | 93 |
| Meadow | | Poor | | 63 | 77 | 85 | 88 |
| | | Fair | | 51 | 70 | 80 | 84 |
| | | Good | | 30 | 58 | 72 | 78 |
| Open space (lawns, parks, golf courses, cemeteries, etc )[7] | Grass cover <50% | Poor | | 68 | 79 | 86 | 89 |
| | Grass cover 50% to 75% | Fair | | 49 | 69 | 79 | 84 |
| | Grass cover >75% | Good | | 39 | 61 | 74 | 80 |
| Pasture or range land | | Poor | | 68 | 79 | 86 | 89 |
| | | Fair | | 49 | 69 | 79 | 84 |
| | | Good | | 39 | 61 | 74 | 80 |
| Perennial grass | | Poor | | 67 | 79 | 86 | 89 |
| | | Fair | | 50 | 69 | 79 | 84 |
| | | Good | | 38 | 61 | 74 | 80 |

**Table 4-10**

**RUNOFF CURVE NUMBERS FOR PZN CONDITIONS 1.0, 2.0, AND 3.0**

| CN For | | | CN For | | |
|---|---|---|---|---|---|
| PZN Condition = 1 0 | PZN Condition = 2 0 | PZN Condition = 3 0 | PZN Condition = 1 0 | PZN Condition = 2 0 | PZN Condition = 3 0 |
| 100 | 100 | 100 | 40 | 60 | 78 |
| 97 | 99 | 100 | 39 | 59 | 77 |
| 94 | 98 | 99 | 38 | 58 | 76 |
| 91 | 97 | 99 | 37 | 57 | 75 |
| 89 | 96 | 99 | 37 | 56 | 75 |
| 87 | 95 | 98 | 34 | 55 | 73 |
| 85 | 94 | 98 | 34 | 54 | 73 |
| 83 | 93 | 98 | 33 | 53 | 72 |
| 81 | 92 | 97 | 32 | 52 | 71 |
| 80 | 91 | 97 | 31 | 51 | 70 |
| 78 | 90 | 96 | 31 | 50 | 70 |
| 76 | 89 | 96 | 30 | 49 | 69 |
| 75 | 88 | 95 | 29 | 48 | 68 |
| 73 | 87 | 95 | 28 | 47 | 67 |
| 72 | 86 | 94 | 27 | 46 | 66 |
| 70 | 85 | 94 | 26 | 45 | 65 |
| 68 | 84 | 93 | 25 | 44 | 64 |
| 67 | 83 | 93 | 25 | 43 | 63 |
| 66 | 82 | 92 | 24 | 42 | 62 |
| 64 | 81 | 92 | 23 | 41 | 61 |
| 63 | 80 | 91 | 22 | 40 | 60 |
| 62 | 79 | 91 | 21 | 39 | 59 |
| 60 | 78 | 90 | 21 | 38 | 58 |
| 59 | 77 | 89 | 20 | 37 | 57 |
| 58 | 76 | 89 | 19 | 36 | 56 |
| 57 | 75 | 88 | 18 | 35 | 55 |
| 55 | 74 | 88 | 18 | 34 | 54 |
| 54 | 73 75 | 87 | 17 | 33 | 53 |
| 53 | 72 | 86 | 16 | 32 | 52 |
| 52 | 71 | 86 | 16 | 31 | 51 |
| 51 | 70 | 85 | 15 | 30 | 50 |
| 50 | 69 | 84 | | | |
| 48 | 68 | 84 | 12 | 25 | 43 |
| 47 | 67 | 83 | 9 | 20 | 37 |
| 46 | 66 | 82 | 6 | 15 | 30 |
| 45 | 65 | 82 | 4 | 10 | 22 |
| 44 | 64 | 81 | 2 | 5 | 13 |
| 43 | 63 | 80 | 0 | 0 | 0 |
| 42 | 62 | 79 | | | |
| 41 | 61 | 78 | | | |

Harmoy Grove Village
J-14312B
Post Project Condition
FN.HGV_POST _LA

SCS LAG COMPUTATION
COPYRIGHT 1992 RICK ENGINEERING COMPANY

BASIN 1

L = 1.48 MI
LC = .81 MI
S = 60.9 FT/MI
N = .05
D = 5 MIN

SCS LAG = 466 HRS
NOTE ON N SELECTION FOR POST-PROJECT CONDITION:
THE BASIN FACTOR WAS DETERMINED TO BE 0.05 DUE TO THE LOW RESIDENTIAL LANDUSE AND VEGETATIVE COVER (PLEASE REFER TO LANDUSE AND VEGETATIVE COVER MAPS). FURTHERMORE, THERE ARE FEW EXISTING DRAINAGE IMPROVEMENTS FOR THE POST-CONDITION.

**********

SCS LAG COMPUTATION
COPYRIGHT 1992 RICK ENGINEERING COMPANY

BASIN 2

L = 76 MI
LC = 25 MI
S = 290.4 FT/MI
N = 018
D = 5 MIN

SCS LAG = 026 HRS
NOTE ON N SELECTION FOR POST-PROJECT CONDITION·
N DETERMINED TO BE 0 018 BECAUSE PROPOSED LAND USE DENOTES HIGH DENSITY RESIDENTIAL THERE IS SIGNIFICANT DRAINAGE IMPROVEMENTS IN THE AREA

**********

SCS LAG COMPUTATION
COPYRIGHT 1992 RICK ENGINEERING COMPANY

BASIN 3

L = .66 MI
LC = .27 MI
S = 776.9 FT/MI
N = .05
D = 5 MIN

SCS LAG = 110 HRS
NOTE ON N SELECTION FOR POST-PROJECT CONDITION:
THE BASIN FACTOR WAS DETERMINED TO BE 0 05 DUE TO THE LOW RESIDENTIAL LANDUSE AND VEGETATIVE COVER (PLEASE REFER TO LANDUSE AND VEGETATIVE COVER MAPS). FURTHERMORE, THERE ARE FEW EXISTING DRAINAGE IMPROVEMENTS FOR THE POST-CONDITION.
This basin factor number will be the same for the pre and post condition.

**********

SCS LAG COMPUTATION
COPYRIGHT 1992 RICK ENGINEERING COMPANY

BASIN 4

L = 76 MI
LC = .4 MI
S = 488 4 FT/MI
N = .018
D = 5 MIN

SCS LAG = .031 HRS
NOTE ON N SELECTION FOR POST-PROJECT CONDITION·
N DETERMINED TO BE 0.018 BECAUSE PROPOSED LAND USE DENOTES HIGH DENSITY RESIDENTIAL. THERE IS SIGNIFICANT DRAINAGE IMPROVEMENTS IN THE AREA
**********

SCS LAG COMPUTATION
COPYRIGHT 1992 RICK ENGINEERING COMPANY

BASIN 5

L = .95 MI
LC = .47 MI
S = 992.6 FT/MI
N = .05
D = 5 MIN

SCS LAG = 164 HRS
NOTE ON N SELECTION FOR POST-PROJECT CONDITION.

THE BASIN FACTOR WAS DETERMINED TO BE 0 05 DUE TO THE LOW RESIDENTIAL LANDUSE AND VEGETATIVE COVER (PLEASE REFER TO LANDUSE AND VEGETATIVE COVER MAPS). FURTHERMORE, THERE ARE FEW EXISTING DRAINAGE IMPROVEMENTS FOR THE POST-CONDITION

This basin factor number will be the same for the pre and post condition

**********

SCS LAG COMPUTATION
COPYRIGHT 1992 RICK ENGINEERING COMPANY

BASIN 6

L = 47 MI
LC = .32 MI
S = 211 2 FT/MI
N = .018
D = 5 MIN

SCS LAG = 024 HRS

NOTE ON N SELECTION FOR POST-PROJECT CONDITION.
N DETERMINED TO BE 0 018 BECAUSE PROPOSED LAND USE DENOTES HIGH DENSITY RESIDENTIAL THERE IS SIGNIFICANT DRAINAGE IMPROVEMENTS IN THE AREA

**********

SCS LAG COMPUTATION
COPYRIGHT 1992 RICK ENGINEERING COMPANY

BASIN 7

L = 1.29 MI
LC = .61 MI
S = 829.3 FT/MI
N = 005
D = 5 MIN

SCS LAG = .222 HRS
NOTE ON N SELECTION FOR POST-PROJECT CONDITION
THE BASIN FACTOR WAS DETERMINED TO BE 0 05 DUE TO THE LOW RESIDENTIAL LANDUSE AND VEGETATIVE COVER (PLEASE REFER TO LANDUSE AND VEGETATIVE COVER MAPS). FURTHERMORE, THERE ARE FEW EXISTING DRAINAGE IMPROVEMENTS FOR THE POST-CONDITION.

This basin factor number will be the same for the pre and post condition

**********

SCS LAG COMPUTATION
COPYRIGHT 1992 RICK ENGINEERING COMPANY

BASIN 8

L = .28 MI
LC = 19 MI
S = 176 FT/MI
N = .018
D = 5 MIN

SCS LAG = 004 HRS
NOTE ON N SELECTION FOR POST-PROJECT CONDITION:
N DETERMINED TO BE 0.018 BECAUSE PROPOSED LAND USE DENOTES HIGH DENSITY RESIDENTIAL. THERE IS SIGNIFICANT DRAINAGE IMPROVEMENTS IN THE AREA.
**********

SCS LAG COMPUTATION
COPYRIGHT 1992 RICK ENGINEERING COMPANY

BASIN 9

L = 23 MI
LC = 13 MI
S = 44 FT/MI
N = .018
D = 5 MIN

SCS LAG = 006 HRS

NOTE ON N SELECTION FOR POST-PROJECT CONDITION.
N DETERMINED TO BE 0.018 BECAUSE PROPOSED LAND USE DENOTES
HIGH DENSITY RESIDENTIAL THERE IS SIGNIFICANT DRAINAGE
IMPROVEMENTS IN THE AREA.
**********

SCS LAG COMPUTATION
COPYRIGHT 1992 RICK ENGINEERING COMPANY

BASIN 10

L = 8 MI
LC = .38 MI
S = 644 9 FT/MI
N = 045
D = 5 MIN

SCS LAG = 132 HRS

NOTE ON N SELECTION FOR POST-PROJECT CONDITION.
N DETERMINED TO BE 0 045 BECAUSE PROPOSED LAND USE DENOTES
AN EQUESTRIAN AREA THERE IS PASTURES AND LITTLE DRAINAGE
IMPROVEMENTS IN THE AREA
**********

HEC1 FN: H6_100P3



**WORKSHEET 4-3** Harmony Grove Village **Peak Discharge Computation**
(name of project)

*****For use with NRCS Hydrologic Method Computations*****

Items in boxes are required input parameters for the SDUH Peak Discharge Program

Computed by Rick Engineering Company Date 12/6/05

Project Identification (Drainage Area Name) Post Project Basin 1

Geographic location of center of drainage area Long ____ " Lat ____ "

Drainage Area 1.29 – square miles

Storm Frequency (Section 2 3) 100 – year

6-Hour Storm Duration Precipitation (Appendix B) 3.3 – inches

24-Hour Storm Duration Precipitation (Appendix B) 5.7 – inches

Precipitation Zone Number (PZN) (Section 4 1 2 4 and Appendix C) PZN = 1 0 1.6 2 0 ____ 3 0 ____ 4 0

PZN Ajustment Factor for LESS THAN A ~~5-year to~~ 35-year storm frequency (interpolate) (Section 4 1 2 4 and Table 4-6) 1 5 ____ 2 5 ____ 2 0 ____ 1 5

PZN Ajustment Factor for 35-year to 150-year storm frequency (interpolate) (Section 4 1 2 4 and Table 4-6) 2 0 2.6 3 0 ____ 3 0 ____ 2 0

PZN Adjusted Runoff Curve Number (interpolate between nearest whole number PZN conditions) (Sections 4 1 2 4 and 4 2 4, Tables 4-6 and 4-10) $CN_{10 \text{ or } 20}$ 74 $CN_x$ 82 $CN_{20 \text{ or } 30}$ 88

Watershed Length (L) (Section 4 3 1) 1.48 – miles

Length to Centroid ($L_c$) (Section 4 3 1) 0 81 – miles

710 - 620 / 1.48

Slope (s) (Section 4 3 1) 60.9 – feet/mile

Basin $\bar{n}$ Factor (Section 4 3 5) 0 05

m = .35 for 2003 SD

Corps lag ($T_L$) = 24 $\bar{n}$ $((L \times L_c)/s^{0.5})^m$ (Section 4 3 1 1)
OR
Corps lag ($T_L$) = 0 8 $T_c$ (Section 4 3 1 2)

Lag Time 0 589 – hours

Time to Peak = 0 862 x Corps lag (Section 4 1 5 5)

Time to Peak 0 508 – hours

NRCS $(T_L)$ = $T_p - \frac{D}{2}$ (San Diego 2003 D - 5 min) NRCS $(T_L)$ = 0 466 - hours

**WORKSHEET 4-3** Harmony Grove Village **Peak Discharge Computation**
(name of project)

*****For use with NRCS Hydrologic Method Computations*****

Items in boxes are required input parameters for the SDUH Peak Discharge Program

Computed by Rick Engineering Company Date _____

Project Identification (Drainage Area Name) Post Project Basin 2

Geographic location of center of drainage area Long _____ " Lat _____ "

Drainage Area 0 28 – square miles

Storm Frequency (Section 2 3) 100 – year

6-Hour Storm Duration Precipitation (Appendix B) 3 3 – inches

24-Hour Storm Duration Precipitation (Appendix B) 5 7 – inches

Precipitation Zone Number (PZN) (Section 4 1 2 4 and Appendix C) PZN = 1 0 1 6 2 0 ____ 3 0 ____ 4 0

LESS THAN A ~~5 year to~~ PZN Ajustment Factor for 35-year storm frequency (interpolate) (Section 4 1 2 4 and Table 4-6) 1 5 ____ 2 5 ____ 2 0 ____ 1 5

PZN Ajustment Factor for 35-year to 150-year storm frequency (interpolate) (Section 4 1 2 4 and Table 4-6) 2 0 2.6 3 0 ____ 3 0 ____ 2 0

PZN Adjusted Runoff Curve Number (interpolate between nearest whole number PZN conditions) (Sections 4 1 2 4 and 4 2 4, Tables 4-6 and 4-10) $CN_{10 \text{ or } 20}$ 91 $CN_X$ 95 $CN_{20 \text{ or } 30}$ 97

Watershed Length (L) (Section 4 3 1) 0 76 – miles

Length to Centroid ($L_c$) (Section 4 3 1) 0.25 – miles

$\frac{790 - 570}{0.76}$

Slope (s) (Section 4 3 1) 290 4 – feet/mile Basin $\bar{n}$ Factor (Section 4 3 5) 0.018

Corps lag ($T_L$) = 24 $\bar{n}$ $((L \times L_c)/s^{0.5})^m$ (Section 4 3 1 1)
OR
Corps lag ($T_L$) = 0 8 $T_c$ (Section 4 3 1 2) Lag Time 0.078 – hours

Time to Peak = 0 862 x Corps lag (Section 4 1 5 5) Time to Peak 0 067 – hours

NRCS$_{(T_L)}$ 0.026 hour

**WORKSHEET 4-3** Harmony Grove Village **Peak Discharge Computation**
(name of project)

*****For use with NRCS Hydrologic Method Computations*****

Items in boxes are required input parameters for the SDUH Peak Discharge Program.

Computed by Rick Engineering Company Date 12/6/05

Project Identification (Drainage Area Name) Post Project Basin 3

Geographic location of center of drainage area Long _____ " Lat _____ "

Drainage Area 0.19 – square miles

Storm Frequency (Section 2 3) 100 – year

6-Hour Storm Duration Precipitation (Appendix B) 3 3 – inches

24-Hour Storm Duration Precipitation (Appendix B) 5 7 – inches

Precipitation Zone Number (PZN) (Section 4 1 2 4 and Appendix C) PZN = 1 0 1 6 2 0 ____ 3 0 ____ 4 0

LESS THAN A ~~5 year to~~ PZN Ajustment Factor for 35-year storm frequency (interpolate) (Section 4 1 2 4 and Table 4-6) 1 5 ____ 2 5 ____ 2 0 ____ 1 5

PZN Ajustment Factor for 35-year to 150-year storm frequency (interpolate) (Section 4 1 2 4 and Table 4-6) 2 0 2 6 3 0 ____ 3 0 ____ 2 0

PZN Adjusted Runoff Curve Number (interpolate between nearest whole number PZN conditions) (Sections 4 1 2 4 and 4 2 4, Tables 4-6 and 4-10) $CN_{10 \text{ or } 20}$ 73 $CN_X$ 81 $CN_{20 \text{ or } 30}$ 87

Watershed Length (L) (Section 4 3 1) 0 66 – miles

Length to Centroid ($L_c$) (Section 4 3 1) 0.27 – miles

$\frac{1325-810}{0\ 66}$

Slope (s) (Section 4 3 1) 776 9 – feet/mile

Basin $\bar{n}$ Factor (Section 4 3 5) 0 05

Corps lag ($T_L$) = 24 $\bar{n}$ $((L \times L_c)/s^{0\ 5})^m$ (Section 4 3 1 1)
OR
Corps lag ($T_L$) = 0 8 $T_c$ (Section 4 3 1 2)

Lag Time 0 176 – hours

Time to Peak = 0 862 x Corps lag (Section 4 1 5 5)

Time to Peak 0 152 – hours

NRCS ($T_L$) 0 110 hours

**WORKSHEET 4-3** Harmony Grove Village (name of project) **Peak Discharge Computation**

*****For use with NRCS Hydrologic Method Computations*****

Items in boxes are required input parameters for the SDUH Peak Discharge Program.

Computed by Rick Engineering Company Date 12/06/05

Project Identification (Drainage Area Name) Post Project Basin 4

Geographic location of center of drainage area Long ____ " Lat ____ "

Drainage Area 0 18 – square miles

Storm Frequency (Section 2 3) 100 – year

6-Hour Storm Duration Precipitation (Appendix B) 3.3 – inches

24-Hour Storm Duration Precipitation (Appendix B) 5.7 – inches

Precipitation Zone Number (PZN) (Section 4 1 2 4 and Appendix C) PZN = 1 0 1.6 2 0 ____ 3 0 ____ 4 0

LESS THAN A ~~5-year to~~ PZN Ajustment Factor for 35-year storm frequency (interpolate) (Section 4 1 2 4 and Table 4-6) 1 5 ____ 2 5 ____ 2 0 ____ 1 5

PZN Ajustment Factor for 35-year to 150-year storm frequency (interpolate) (Section 4 1 2 4 and Table 4-6) 2 0 2 6 3 0 ____ 3 0 ____ 2 0

PZN Adjusted Runoff Curve Number (interpolate between nearest whole number PZN conditions) (Sections 4 1 2 4 and 4 2 4, Tables 4-6 and 4-10) $CN_{10 \text{ or } 20}$ 79 $CN_X$ 86 $CN_{20 \text{ or } 30}$ 91

Watershed Length (L) (Section 4 3 1) 0 76 – miles

Length to Centroid ($L_c$) (Section 4 3 1) 0.40 – miles

$\frac{1040 - 670}{0\ 76}$

Slope (s) (Section 4 3 1) 488 4 – feet/mile

Basin $\bar{n}$ Factor (Section 4 3 5) 0.018

Corps lag ($T_L$) = 24 $\bar{n}$ $((L \times L_c)/s^{0.5})^m$ (Section 4 3 1 1)
OR
Corps lag ($T_L$) = 0 8 $T_c$ (Section 4 3 1 2)

Lag Time 0.085 – hours

Time to Peak = 0 862 x Corps lag (Section 4 1 5 5)

Time to Peak 0 073 – hours

NRCS 0.031 hours

**WORKSHEET 4-3** Harmony Grove Village **Peak Discharge Computation**
(name of project)

*****For use with NRCS Hydrologic Method Computations*****

Items in boxes are required input parameters for the SDUH Peak Discharge Program

Computed by Rick Engineering Company Date 12/6/05

Project Identification (Drainage Area Name) Post Project Basin 5

Geographic location of center of drainage area Long ____ " Lat ____ "

Drainage Area 0.19 – square miles

Storm Frequency (Section 2 3) 100 – year

6-Hour Storm Duration Precipitation (Appendix B) 3 3 – inches

24-Hour Storm Duration Precipitation (Appendix B) 5 7 – inches

Precipitation Zone Number (PZN) (Section 4 1 2 4 and Appendix C) PZN = 1 0 1 6 2 0 ____ 3 0 ____ 4 0

LESS THAN A ~~5-year to~~ PZN Ajustment Factor for 35-year storm frequency (interpolate) (Section 4 1 2 4 and Table 4-6) 1 5 ____ 2 5 ____ 2 0 ____ 1 5

PZN Ajustment Factor for 35-year to 150-year storm frequency (interpolate) (Section 4 1 2 4 and Table 4-6) 2 0 2.6 3 0 ____ 3 0 ____ 2 0

PZN Adjusted Runoff Curve Number (interpolate between nearest whole number PZN conditions) (Sections 4 1 2 4 and 4 2 4, Tables 4-6 and 4-10) $CN_{10 \text{ or } 20}$ 87 $CN_X$ 92 $CN_{20 \text{ or } 30}$ 95

Watershed Length (L) (Section 4 3 1) 0.95 – miles

Length to Centroid ($L_c$) (Section 4 3 1) 0 47 – miles

$\frac{1610 - 670}{0\ 95}$

Slope (s) (Section 4 3 1) 992 6 – feet/mile Basin $\bar{n}$ Factor (Section 4 3 5) 0.05

Corps lag ($T_L$) = 24 $\bar{n}$ $((L \times L_c)/s^{0\ 5})^m$ (Section 4 3 1 1)
OR
Corps lag ($T_L$) = 0 8 $T_c$ (Section 4 3 1 2) Lag Time 0 238 – hours

Time to Peak = 0 862 x Corps lag (Section 4 1 5 5) Time to Peak 0.205 – hours

NRCS ($T_L$) 0 164 – hours

**WORKSHEET 4-3** Harmony Grove Village (name of project) **Peak Discharge Computation**

*****For use with NRCS Hydrologic Method Computations*****

Items in boxes are required input parameters for the SDUH Peak Discharge Program

Computed by Rick Engineering Company Date 12/6/05

Project Identification (Drainage Area Name) Post - Project Basin 6

Geographic location of center of drainage area Long ____ " Lat ____ "

Drainage Area 0.06 – square miles

Storm Frequency (Section 2 3) 100 – year

6-Hour Storm Duration Precipitation (Appendix B) 3 3 – inches

24-Hour Storm Duration Precipitation (Appendix B) 5 7 – inches

Precipitation Zone Number (PZN) (Section 4 1 2 4 and Appendix C) PZN = 1 0 1 6 2 0 ____ 3 0 ____ 4 0

LESS THAN A ~~5-year to~~ PZN Ajustment Factor for 35-year storm frequency (interpolate) (Section 4 1 2 4 and Table 4-6) 1 5 ____ 2 5 ____ 2 0 ____ 1 5

PZN Ajustment Factor for 35-year to 150-year storm frequency (interpolate) (Section 4 1 2 4 and Table 4-6) 2 0 2.6 3 0 ____ 3 0 ____ 2 0

PZN Adjusted Runoff Curve Number (interpolate between nearest whole number PZN conditions) (Sections 4 1 2 4 and 4 2 4, Tables 4-6 and 4-10) $CN_{10 \text{ or } 20}$ 85 $CN_x$ 90 $CN_{20 \text{ or } 30}$ 94

Watershed Length (L) (Section 4 3 1) 0.47 – miles

Length to Centroid ($L_c$) (Section 4 3.1) 0 32 – miles

$\frac{670 - 570}{0.47}$

Slope (s) (Section 4 3 1) 211 2 – feet/mile Basin $\bar{n}$ Factor (Section 4 3 5) 0.018

Corps lag ($T_L$) = 24 $\bar{n}$ $((L \times L_c)/s^{0.5})^m$ (Section 4 3 1 1)
OR
Corps lag ($T_L$) = 0 8 $T_c$ (Section 4 3 1 2) Lag Time 0 076 – hours

Time to Peak = 0 862 x Corps lag (Section 4 1 5 5) Time to Peak 0.066 – hours

NRCS 0 024 – hours

**WORKSHEET 4-3** Harmony Grove Village (name of project) **Peak Discharge Computation**

*****For use with NRCS Hydrologic Method Computations*****

Items in boxes are required input parameters for the SDUH Peak Discharge Program

Computed by Rick Engineering Company Date _____

Project Identification (Drainage Area Name) Post - Project Basin 7

Geographic location of center of drainage area Long _____ " Lat _____ "

Drainage Area 0.56 – square miles

Storm Frequency (Section 2 3) 100 – year

6-Hour Storm Duration Precipitation (Appendix B) 3.3 – inches

24-Hour Storm Duration Precipitation (Appendix B) 5.7 – inches

Precipitation Zone Number (PZN) (Section 4 1 2 4 and Appendix C) PZN = 1 0 1.6 2 0 ____ 3 0 ____ 4 0

LESS THAN A ~~5-year to~~ 35-year storm frequency (interpolate) (Section 4 1 2 4 and Table 4-6) 1 5 ____ 2 5 ____ 2 0 ____ 1 5

PZN Ajustment Factor for 35-year to 150-year storm frequency (interpolate) (Section 4 1 2 4 and Table 4-6) 2 0 2.6 3 0 ____ 3 0 ____ 2 0

PZN Adjusted Runoff Curve Number (interpolate between nearest whole number PZN conditions) (Sections 4 1 2 4 and 4 2 4, Tables 4-6 and 4-10) $CN_{10 \text{ or } 20}$ 84 $CN_X$ 89 $CN_{20 \text{ or } 30}$ 93

Watershed Length (L) (Section 4 3 1) 1.29 – miles

Length to Centroid ($L_c$) (Section 4 3 1) 0.61 – miles

$\frac{1688-620}{1\ 29}$

Slope (s) (Section 4 3 1) 829 3 – feet/mile

Basin $\bar{n}$ Factor (Section 4 3 5) 0 05

Corps lag ($T_L$) = 24 $\bar{n}$ $((L \times L_c)/s^{0.5})^m$ (Section 4 3 1 1)
OR
Corps lag ($T_L$) = 0 8 $T_c$ (Section 4 3 1 2)

Lag Time 0 306 – hours

Time to Peak = 0 862 x Corps lag (Section 4 1 5 5)

Time to Peak 0 263 – hours

$NRCS_{(T_L)}$ = 0.222 – hours

**WORKSHEET 4-3** Harmony Grove Village **Peak Discharge Computation**
(name of project)

*****For use with NRCS Hydrologic Method Computations*****

Items in boxes are required input parameters for the SDUH Peak Discharge Program

Computed by Rick Engineering Company Date _____

Project Identification (Drainage Area Name) Post - Project Basin 8

Geographic location of center of drainage area. Long _____ " Lat _____ "

Drainage Area 0.05 – square miles

Storm Frequency (Section 2 3) 100 – year

6-Hour Storm Duration Precipitation (Appendix B) 3 3 – inches

24-Hour Storm Duration Precipitation (Appendix B) 5.7 – inches

Precipitation Zone Number (PZN) (Section 4 1 2 4 and Appendix C) PZN = 1 0 1 6 2 0 ____ 3 0 ____ 4 0

PZN Ajustment Factor for ~~5-year to~~ 35-year storm frequency (interpolate) (Section 4 1 2 4 and Table 4-6) 1 5 ____ 2 5 ____ 2.0 ____ 1 5

LESS THAN A

PZN Ajustment Factor for 35-year to 150-year storm frequency (interpolate) (Section 4 1 2 4 and Table 4-6) 2 0 2 6 3 0 ____ 3 0 ____ 2 0

PZN Adjusted Runoff Curve Number (interpolate between nearest whole number PZN conditions) (Sections 4 1 2 4 and 4 2 4, Tables 4-6 and 4-10) $CN_{1\,0\,or\,2\,0}$ 93 $CN_X$ 96 $CN_{2\,0\,or\,3\,0}$ 98

Watershed Length (L) (Section 4 3 1) 0 28 – miles

Length to Centroid ($L_c$) (Section 4 3 1) 0 19 – miles

$\frac{620-570}{0.28}$

Slope (s) (Section 4 3 1) 176 0 – feet/mile

Basin $\bar{n}$ Factor (Section 4 3 5) 0 018

Corps lag ($T_L$) = 24 $\bar{n}$ $((L \times L_c)/s^{0\,5})^m$ (Section 4 3 1 1)
OR
Corps lag ($T_L$) = 0 8 $T_c$ (Section 4 3 1 2)

Lag Time 0 053 – hours

Time to Peak = 0 862 x Corps lag (Section 4 1 5 5)

Time to Peak 0.046 hours

NRCS $_{(T_L)}$ 0 004 – hours

**WORKSHEET 4-3** Harmony Grove Village (name of project) **Peak Discharge Computation**

*****For use with NRCS Hydrologic Method Computations*****

Items in boxes are required input parameters for the SDUH Peak Discharge Program

Computed by Rick Engineering Company Date: 12/6/05

Project Identification (Drainage Area Name) Post - Project Basin 9

Geographic location of center of drainage area Long _____ " Lat _____ "

Drainage Area 0 04 – square miles

Storm Frequency (Section 2 3) 100 – year

6-Hour Storm Duration Precipitation (Appendix B) 3 3 – inches

24-Hour Storm Duration Precipitation (Appendix B) 5 7 – inches

Precipitation Zone Number (PZN) (Section 4 1 2 4 and Appendix C) PZN = 1 0 1 6 2 0 ____ 3 0 ____ 4 0

LESS THAN A PZN Ajustment Factor for ~~5-year to~~ 35-year storm frequency (interpolate) (Section 4 1 2 4 and Table 4-6) 1 5 ____ 2 5 ____ 2 0 ____ 1 5

PZN Ajustment Factor for 35-year to 150-year storm frequency (interpolate) (Section 4 1 2 4 and Table 4-6) 2 0 2.6 3 0 ____ 3 0 ____ 2 0

PZN Adjusted Runoff Curve Number (interpolate between nearest whole number PZN conditions) (Sections 4 1 2 4 and 4 2 4, Tables 4-6 and 4-10) $CN_{1\,0\,or\,2\,0}$ 93 $CN_X$ 96 $CN_{2\,0\,or\,3\,0}$ 98

Watershed Length (L) (Section 4 3 1) 0 23 – miles

Length to Centroid ($L_c$) (Section 4 3 1) 0.13 – miles

$\frac{570-560}{0\ 23}$ Slope (s) (Section 4 3 1) 44 0 – feet/mile Basin $\bar{n}$ Factor (Section 4 3 5) 0 0 1 8

Corps lag ($T_L$) = 24 $\bar{n}$ $((L \times L_c)/s^{0\,5})^m$ (Section 4 3 1 1)
OR
Corps lag ($T_L$) = 0 8 $T_c$ (Section 4 3 1 2) Lag Time 0.055 – hours

Time to Peak = 0 862 x Corps lag (Section 4 1 5 5) Time to Peak 0 048 – hours

NRCS (TL) = 0 0061 - hour

**WORKSHEET 4-3** Harmony Grove Village (name of project) **Peak Discharge Computation**

*****For use with NRCS Hydrologic Method Computations*****

Items in boxes are required input parameters for the SDUH Peak Discharge Program

Computed by Rick Engineering Company Date: 12/14/05

Project Identification (Drainage Area Name) Post - Project Basin 10

Geographic location of center of drainage area: Long. ____ " Lat. ____ "

Drainage Area 0.13 – square miles

Storm Frequency (Section 2 3) 100 – year

6-Hour Storm Duration Precipitation (Appendix B) 3 3 – inches

24-Hour Storm Duration Precipitation (Appendix B) 5 7 – inches

Precipitation Zone Number (PZN) (Section 4 1 2 4 and Appendix C) PZN = 1 0 1 6 2 0 ____ 3 0 ____ 4 0

LESS THAN A ~~5-year to~~ 35-year storm frequency (interpolate) (Section 4 1 2 4 and Table 4-6) 1 5 ____ 2 5 ____ 2.0 ____ 1.5

PZN Ajustment Factor for 35-year to 150-year storm frequency (interpolate) (Section 4 1 2 4 and Table 4-6) 2 0 2.6 3 0 ____ 3 0 ____ 2.0

PZN Adjusted Runoff Curve Number (interpolate between nearest whole number PZN conditions) (Sections 4 1 2 4 and 4 2.4, Tables 4-6 and 4-10) $CN_{1\,0\,or\,2\,0}$ 91 $CN_X$ 95 $CN_{2\,0\,or\,3\,0}$ 97

Watershed Length (L) (Section 4 3 1) 0 8 – miles

Length to Centroid ($L_c$) (Section 4 3.1) 0.38 – miles

$\frac{1033 - 560}{0\ 80}$

Slope (s) (Section 4 3 1) 644 9 – feet/mile

Basin $\bar{n}$ Factor (Section 4 3 5) 0.045

Corps lag ($T_L$) = 24 $\bar{n}$ $((L \times L_c)/s^{0\,5})^m$ (Section 4 3 1 1)
OR
Corps lag ($T_L$) = 0 8 $T_c$ (Section 4 3 1 2)

Lag Time 0 201 – hours

Time to Peak = 0 862 x Corps lag (Section 4 1 5 5)

Time to Peak 0.173 – hours

0 132 hour

**WORKSHEET 4-3** Harmony Grove Village (name of project) **Peak Discharge Computation**

*****For use with NRCS Hydrologic Method Computations*****

Items in boxes are required input parameters for the SDUH Peak Discharge Program

Computed by Rick Engineering Company Date 12/12/05

Project Identification (Drainage Area Name) Post Project Basin 1

Geographic location of center of drainage area Long _____ " Lat _____ "

Drainage Area 1 29 – square miles

Storm Frequency (Section 2 3) 2 – year

6-Hour Storm Duration Precipitation (Appendix B) 1 5 – inches

24-Hour Storm Duration Precipitation (Appendix B) 2 4 – inches

Precipitation Zone Number (PZN) (Section 4 1 2 4 and Appendix C) PZN = 1 0 1.6 2 0 ____ 3 0 ____ 4 0

LESS THAN A PZN Ajustment Factor for ~~5-year to~~ 35-year storm frequency (interpolate) (Section 4 1 2 4 and Table 4-6) 1 5 2 1 2 5 ____ 2 0 ____ 1 5

PZN Ajustment Factor for 35-year to 150-year storm frequency (interpolate) (Section 4 1 2 4 and Table 4-6) 2 0 ____ 3 0 ____ 3 0 ____ 2 0

PZN Adjusted Runoff Curve Number (interpolate between nearest whole number PZN conditions) (Sections 4 1 2 4 and 4 2 4, Tables 4-6 and 4-10) $CN_{1\,0\,or\,2\,0}$ 74 $CN_X$ 75 $CN_{2\,0\,or\,3\,0}$ 88

Watershed Length (L) (Section 4 3 1) 1 48 – miles

Length to Centroid ($L_c$) (Section 4 3 1) 0.81 – miles

Slope (s) (Section 4 3 1) 60.9 – feet/mile Basin $\bar{n}$ Factor (Section 4 3.5) 0.05

Corps lag ($T_L$) = 24 $\bar{n}$ $((L \times L_c)/s^{0\,5})^m$ (Section 4 3 1 1)
OR
Corps lag ($T_L$) = 0 8 $T_c$ (Section 4 3 1 2) Lag Time. 0.589 – hours

Time to Peak = 0 862 x Corps lag (Section 4 1 5 5) Time to Peak 0.508 – hours

0.466 – hours

**WORKSHEET 4-3** Harmony Grove Village **Peak Discharge Computation**
(name of project)

*****For use with NRCS Hydrologic Method Computations*****

Items in boxes are required input parameters for the SDUH Peak Discharge Program

Computed by Rick Engineering Company Date: 12/12/05

Project Identification (Drainage Area Name) Post Project Basin 2

Geographic location of center of drainage area Long ____ " Lat: ____ "

Drainage Area 0.28 – square miles

Storm Frequency (Section 2 3) 2 – year

6-Hour Storm Duration Precipitation (Appendix B) 1 5 – inches

24-Hour Storm Duration Precipitation (Appendix B) 2 4 – inches

Precipitation Zone Number (PZN) (Section 4 1.2 4 and Appendix C) PZN = 1 0 1 1 20 ____ 30 ____ 40

PZN Ajustment Factor for ~~5-year to~~ 35-year storm frequency (interpolate) (Section 4 1 2 4 and Table 4-6) 15 2 1 25 ____ 20 ____ 15

LESS THAN A

PZN Ajustment Factor for 35-year to 150-year storm frequency (interpolate) (Section 4 1 2 4 and Table 4-6) 20 ____ 30 ____ 30 ____ 20

PZN Adjusted Runoff Curve Number (interpolate between nearest whole number PZN conditions) (Sections 4 1 2 4 and 4 2 4, Tables 4-6 and 4-10) $CN_{10 \text{ or } 20}$ 91 $CN_X$ 92 $CN_{20 \text{ or } 30}$ 97

Watershed Length (L) (Section 4 3 1) 0 76 – miles

Length to Centroid ($L_c$) (Section 4 3 1) 0 25 – miles

Slope (s) (Section 4 3 1) 290.4 – feet/mile

Basin $\bar{n}$ Factor (Section 4 3 5) 0.018

Corps lag ($T_L$) = 24 $\bar{n}$ $((L \times L_c)/s^{0.5})^m$ (Section 4 3 1.1)
OR
Corps lag ($T_L$) = 0.8 $T_c$ (Section 4 3 1 2)

Lag Time 0 078 – hours

Time to Peak = 0 862 x Corps lag (Section 4 1 5 5)

Time to Peak 0 067 – hours

NRCS $T_L$ 0.026 hour

**WORKSHEET 4-3** Harmony Grove Village (name of project) **Peak Discharge Computation**

*****For use with NRCS Hydrologic Method Computations*****

Items in boxes are required input parameters for the SDUH Peak Discharge Program

Computed by: Rick Engineering Company Date 12/12/05

Project Identification (Drainage Area Name) Post Project Basin 3

Geographic location of center of drainage area Long ____ " Lat: ____ "

Drainage Area 0 19 – square miles

Storm Frequency (Section 2 3) 2 – year

6-Hour Storm Duration Precipitation (Appendix B) 1.5 – inches

24-Hour Storm Duration Precipitation (Appendix B) 2.4 – inches

Precipitation Zone Number (PZN) (Section 4 1 2 4 and Appendix C) PZN = 1 0 1.6 2 0 ____ 3 0 ____ 4 0

LESS THAN A ~~5-year to~~ PZN Ajustment Factor for 35-year storm frequency (interpolate) (Section 4 1 2 4 and Table 4-6) 1 5 2.1 2 5 ____ 2 0 ____ 1 5

PZN Ajustment Factor for 35-year to 150-year storm frequency (interpolate) (Section 4 1 2 4 and Table 4-6) 2 0 ____ 3 0 ____ 3 0 ____ 2 0

PZN Adjusted Runoff Curve Number (interpolate between nearest whole number PZN conditions) (Sections 4 1 2 4 and 4.2 4, Tables 4-6 and 4-10) $CN_{10 \text{ or } 0}$ 73 $CN_X$ 74 $CN_{20 \text{ or } 30}$ 87

Watershed Length (L) (Section 4 3 1) 0.66 – miles

Length to Centroid ($L_c$) (Section 4 3 1) 0.27 – miles

Slope (s) (Section 4 3 1) 776.9 – feet/mile

Basin $\bar{n}$ Factor (Section 4 3 5) 0.05

Corps lag ($T_L$) = 24 $\bar{n}$ $((L \times L_c)/s^{0.5})^m$ (Section 4 3 1 1)
OR
Corps lag ($T_L$) = 0 8 $T_c$ (Section 4 3 1.2)

Lag Time. 0.176 – hours

Time to Peak = 0 862 x Corps lag (Section 4 1 5 5)

Time to Peak 0.152 – hours

NRCS $T_L$ 0.110 - hour

**WORKSHEET 4-3** Harmony Grove Village (name of project) **Peak Discharge Computation**

*****For use with NRCS Hydrologic Method Computations*****

Items in boxes are required input parameters for the SDUH Peak Discharge Program

Computed by Rick Engineering Company Date 12/12/05

Project Identification (Drainage Area Name) Post Project Basin 4

Geographic location of center of drainage area Long ____ " Lat ____ "

Drainage Area· 0.18 – square miles

Storm Frequency (Section 2 3) 2 – year

6-Hour Storm Duration Precipitation (Appendix B) 1.5 – inches

24-Hour Storm Duration Precipitation (Appendix B) 2.4 – inches

Precipitation Zone Number (PZN) (Section 4 1.2 4 and Appendix C) PZN = 1 0 1.6 2 0 ____ 3 0 ____ 4 0

LESS THAN A ~~5-year to~~ PZN Ajustment Factor for 35-year storm frequency (interpolate) (Section 4 1 2 4 and Table 4-6) 1 5 2.1 2 5 ____ 2 0 ____ 1 5

PZN Ajustment Factor for 35-year to 150-year storm frequency (interpolate) (Section 4 1 2 4 and Table 4-6) 2 0 ____ 3 0 ____ 3 0 ____ 2 0

PZN Adjusted Runoff Curve Number (interpolate between nearest whole number PZN conditions) (Sections 4 1 2 4 and 4 2 4, Tables 4-6 and 4-10) $CN_{1\,0\text{ or }2\,0}$ 79 $CN_X$ 80 $CN_{2\,0\text{ or }3\,0}$ 91

Watershed Length (L) (Section 4 3 1) 0.76 – miles

Length to Centroid ($L_c$) (Section 4 3 1) 0.40 – miles

Slope (s) (Section 4 3 1) 488.4 – feet/mile

Basin $\bar{n}$ Factor (Section 4 3 5) 0 018

Corps lag ($T_L$) = 24 $\bar{n}$ $((L \times L_c)/s^{0\,5})^m$ (Section 4 3 1 1)
OR
Corps lag ($T_L$) = 0 8 $T_c$ (Section 4 3 1.2)

Lag Time· 0.085 – hours

Time to Peak = 0 862 x Corps lag (Section 4 1 5 5)

Time to Peak 0.073 – hours

NRCS(m) 0.031 – hour

**WORKSHEET 4-3** Harmony Grove Village (name of project) **Peak Discharge Computation**

*****For use with NRCS Hydrologic Method Computations*****

Items in boxes are required input parameters for the SDUH Peak Discharge Program.

Computed by Rick Engineering Company Date 12/12/05

Project Identification (Drainage Area Name) Post Project Basin 5

Geographic location of center of drainage area Long _____ " Lat· _____ "

Drainage Area 0 19 – square miles

Storm Frequency (Section 2 3) 2 – year

6-Hour Storm Duration Precipitation (Appendix B) 1.5 – inches

24-Hour Storm Duration Precipitation (Appendix B) 2.4 – inches

Precipitation Zone Number (PZN) (Section 4 1.2 4 and Appendix C) PZN = 1 0 1.6 2 0 ____ 3 0 ____ 4 0

LESS THAN A ~~5-year to~~ PZN Ajustment Factor for 35-year storm frequency (interpolate) (Section 4 1 2 4 and Table 4-6) 1 5 2.1 2 5 ____ 2 0 ____ 1 5

PZN Ajustment Factor for 35-year to 150-year storm frequency (interpolate) (Section 4 1 2 4 and Table 4-6) 2 0 ____ 3 0 ____ 3 0 ____ 2 0

PZN Adjusted Runoff Curve Number (interpolate between nearest whole number PZN conditions) (Sections 4 1.2 4 and 4.2 4, Tables 4-6 and 4-10) $CN_{1\,0\text{ or }2\,0}$ 87 $CN_X$ 88 $CN_{2\,0\text{ or }3\,0}$ 95

Watershed Length (L) (Section 4 3 1) 0.95 – miles

Length to Centroid ($L_c$) (Section 4 3 1) 0.47 – miles

Slope (s) (Section 4 3 1) 992 6 – feet/mile

Basin $\bar{n}$ Factor (Section 4 3 5) 0.05

Corps lag ($T_L$) = 24 $\bar{n}$ $((L \times L_c)/s^{0\,5})^m$ (Section 4 3 1 1)
OR
Corps lag ($T_L$) = 0 8 $T_c$ (Section 4 3 1 2)

Lag Time. 0.238 – hours

Time to Peak = 0 862 x Corps lag (Section 4 1 5.5)

Time to Peak 0.205 – hours

NRCS $_{(T_L)}$ 0.164 – hour

**WORKSHEET 4-3** Harmony Grove Village (name of project) **Peak Discharge Computation**

*****For use with NRCS Hydrologic Method Computations*****

Items in boxes are required input parameters for the SDUH Peak Discharge Program

Computed by Rick Engineering Company Date. 12/12/05

Project Identification (Drainage Area Name) Post Project Basin 6

Geographic location of center of drainage area Long _____ " Lat _____ "

Drainage Area: 0.06 – square miles

Storm Frequency (Section 2 3) 2 – year

6-Hour Storm Duration Precipitation (Appendix B) 1.5 – inches

24-Hour Storm Duration Precipitation (Appendix B) 2.4 – inches

Precipitation Zone Number (PZN) (Section 4 1.2 4 and Appendix C) PZN = 1 0 1.6 2.0 ____ 3 0 ____ 4 0

LESS THAN A ~~5-year to~~ PZN Ajustment Factor for 35-year storm frequency (interpolate) (Section 4 1 2 4 and Table 4-6) 1 5 2.1 2 5 ____ 2 0 ____ 1 5

PZN Ajustment Factor for 35-year to 150-year storm frequency (interpolate) (Section 4 1 2 4 and Table 4-6) 2 0 ____ 3 0 ____ 3 0 ____ 2 0

PZN Adjusted Runoff Curve Number (interpolate between nearest whole number PZN conditions) (Sections 4 1 2 4 and 4 2 4, Tables 4-6 and 4-10) $CN_{1\,0\,or\,2\,0}$ 85 $CN_X$ 86 $CN_{2\,0\,or\,3\,0}$ 94

Watershed Length (L) (Section 4 3 1) 0.47 – miles

Length to Centroid ($L_c$) (Section 4 3.1) 0.32 – miles

Slope (s) (Section 4 3 1) 211.2 – feet/mile

Basin $\bar{n}$ Factor (Section 4 3 5) 0.018

Corps lag ($T_L$) = 24 $\bar{n}$ $((L \times L_c)/s^{0\,5})^m$ (Section 4 3 1 1)
OR
Corps lag ($T_L$) = 0 8 $T_c$ (Section 4 3 1 2)

Lag Time. 0.076 – hours

Time to Peak = 0 862 x Corps lag (Section 4 1.5 5)

Time to Peak 0 066 – hours

NRCS 0.024 hour

**WORKSHEET 4-3** Harmony Grove Village (name of project) **Peak Discharge Computation**

*****For use with NRCS Hydrologic Method Computations*****

Items in boxes are required input parameters for the SDUH Peak Discharge Program.

Computed by Rick Engineering Company Date: 12/12/05

Project Identification (Drainage Area Name) Post Project Basin 7

Geographic location of center of drainage area. Long _____ " Lat _____ "

Drainage Area 0.56 – square miles

Storm Frequency (Section 2 3) 2 – year

6-Hour Storm Duration Precipitation (Appendix B) 1.5 – inches

24-Hour Storm Duration Precipitation (Appendix B) 2.4 – inches

Precipitation Zone Number (PZN) (Section 4 1 2 4 and Appendix C) PZN = 1 0 1.6 2.0 ____ 3 0 ____ 4 0

LESS THAN A PZN Ajustment Factor for ~~5-year to~~ 35-year storm frequency (interpolate) (Section 4 1 2 4 and Table 4-6) 1 5 2 1 2 5 ____ 2 0 ____ 1 5

PZN Ajustment Factor for 35-year to 150-year storm frequency (interpolate) (Section 4 1 2 4 and Table 4-6) 2 0 ____ 3 0 ____ 3 0 ____ 2 0

PZN Adjusted Runoff Curve Number (interpolate between nearest whole number PZN conditions) (Sections 4 1.2 4 and 4 2 4, Tables 4-6 and 4-10) $CN_{1\,0\,or\,2\,0}$ 84 $CN_X$ 85 $CN_{2\,0\,or\,3\,0}$ 93

Watershed Length (L) (Section 4 3 1) 1.29 – miles

Length to Centroid ($L_c$) (Section 4 3.1) 0.61 – miles

Slope (s) (Section 4 3 1) 829.3 – feet/mile

Basin $\bar{n}$ Factor (Section 4 3 5) 0.05

Corps lag ($T_L$) = 24 $\bar{n}$ $((L \times L_c)/s^{0\,5})^m$ (Section 4 3 1 1)
OR
Corps lag ($T_L$) = 0 8 $T_c$ (Section 4 3 1 2)

Lag Time 0.306 – hours

Time to Peak = 0 862 x Corps lag (Section 4 1 5 5)

Time to Peak 0.263 – hours

$NRCS_{T_L}$ 0.222 – hours

**WORKSHEET 4-3** Harmony Grove Village (name of project) **Peak Discharge Computation**

*****For use with NRCS Hydrologic Method Computations*****

Items in boxes are required input parameters for the SDUH Peak Discharge Program.

Computed by Rick Engineering Company Date 12/12/05

Project Identification (Drainage Area Name) Post - Project Basin 8

Geographic location of center of drainage area: Long ____ " Lat: ____ "

Drainage Area 0 05 – square miles

Storm Frequency (Section 2 3) 2 – year

6-Hour Storm Duration Precipitation (Appendix B) 1 5 – inches

24-Hour Storm Duration Precipitation (Appendix B) 2 4 – inches

| | | | | | | | |
|---|---|---|---|---|---|---|---|
| Precipitation Zone Number (PZN) (Section 4 1.2 4 and Appendix C) | PZN = 1 0 | 1.6 | 2.0 | ____ | 3 0 | ____ | 4 0 |
| PZN Ajustment Factor for ~~5-year to~~ 35-year storm frequency (interpolate) (Section 4 1 2 4 and Table 4-6) | 1 5 | 2 1 | 2 5 | ____ | 2 0 | ____ | 1 5 |
| PZN Ajustment Factor for 35-year to 150-year storm frequency (interpolate) (Section 4 1 2 4 and Table 4-6) | 2 0 | ____ | 3 0 | ____ | 3 0 | ____ | 2 0 |

LESS THAN A

PZN Adjusted Runoff Curve Number (interpolate between nearest whole number PZN conditions) (Sections 4 1 2 4 and 4 2 4, Tables 4-6 and 4-10) $CN_{1\,0\,or\,1.0}$ 93 $CN_X$ 94 $CN_{2\,0\,or\,1.0}$ 98

Watershed Length (L) (Section 4 3 1) 0.28 – miles

Length to Centroid ($L_c$) (Section 4 3 1) 0.19 – miles

Slope (s) (Section 4 3 1) 176 0 – feet/mile

Basin $\bar{n}$ Factor (Section 4 3 5) 0 018

Corps lag ($T_L$) = 24 $\bar{n}$ $((L \times L_c)/s^{0\,5})^m$ (Section 4 3 1 1)
OR
Corps lag ($T_L$) = 0 8 $T_c$ (Section 4 3 1 2)

Lag Time. 0.053 – hours

Time to Peak = 0 862 x Corps lag (Section 4 1 5 5)

Time to Peak 0.457 – hours

0.004 hour

**WORKSHEET 4-3** Harmony Grove Village (name of project) **Peak Discharge Computation**

*****For use with NRCS Hydrologic Method Computations*****

Items in boxes are required input parameters for the SDUH Peak Discharge Program

Computed by Rick Engineering Company Date 12/12/05

Project Identification (Drainage Area Name) Post Project Basin 9

Geographic location of center of drainage area Long ____ " Lat ____ "

Drainage Area 0 04 – square miles

Storm Frequency (Section 2 3) 2 – year

6-Hour Storm Duration Precipitation (Appendix B) 1.5 – inches

24-Hour Storm Duration Precipitation (Appendix B) 2 4 – inches

| | | | | | | | |
|---|---|---|---|---|---|---|---|
| Precipitation Zone Number (PZN) (Section 4 1 2 4 and Appendix C) | PZN = 1 0 | 1.6 | 2 0 | ____ | 3 0 | ____ | 4 0 |
| PZN Ajustment Factor for ~~5-year to~~ 35-year storm frequency (interpolate) (Section 4 1 2 4 and Table 4-6) | 1 5 | 2.1 | 2 5 | ____ | 2 0 | ____ | 1 5 |
| PZN Ajustment Factor for 35-year to 150-year storm frequency (interpolate) (Section 4 1 2 4 and Table 4-6) | 2 0 | ____ | 3 0 | ____ | 3 0 | ____ | 2 0 |
| PZN Adjusted Runoff Curve Number (interpolate between nearest whole number PZN conditions) (Sections 4 1 2 4 and 4 2 4, Tables 4-6 and 4-10) | $CN_{1\,0\,or\,2\,0}$ | 93 | $CN_x$ | 94 | $CN_{2\,0\,or\,1\,0}$ | 98 | |

LESS THAN A

Watershed Length (L) (Section 4 3 1) 0.23 – miles

Length to Centroid ($L_c$) (Section 4 3 1) 0.13 – miles

Slope (s) (Section 4 3 1) 44 – feet/mile

Basin $\bar{n}$ Factor (Section 4 3 5) 0 018

Corps lag ($T_L$) = 24 $\bar{n}$ $((L \times L_c)/s^{0\,5})^m$ (Section 4 3 1 1)
OR
Corps lag ($T_L$) = 0 8 $T_c$ (Section 4 3 1.2)

Lag Time 0 055 – hours

Time to Peak = 0 862 x Corps lag (Section 4 1 5 5)

Time to Peak 0.048 – hours

NRCS (TL) 0.006 hour

**WORKSHEET 4-3** Harmony Grove Village (name of project) **Peak Discharge Computation**

*****For use with NRCS Hydrologic Method Computations*****

Items in boxes are required input parameters for the SDUH Peak Discharge Program

Computed by: R ck Engineering Company. Date: 12/14/05

Project Identification (Drainage Area Name) Post Project Basin 10

Geographic location of center of drainage area Long. ____ " Lat. ____ "

Drainage Area: 0.13 – square miles

Storm Frequency (Section 2 3) 2 – year

6-Hour Storm Duration Precipitation (Appendix B) 1 5 – inches

24-Hour Storm Duration Precipitation (Appendix B) 2 9 – inches

Precipitation Zone Number (PZN) (Section 4 1 2 4 and Appendix C) PZN = 1 0 1.6 2 0 ____ 3 0 ____ 4 0

LESS THAN A ~~5-year to~~ PZN Ajustment Factor for 35-year storm frequency (interpolate) (Section 4.1 2 4 and Table 4-6) 1 5 2 1 2 5 ____ 2 0 ____ 1 5

PZN Ajustment Factor for 35-year to 150-year storm frequency (interpolate) (Section 4 1 2.4 and Table 4-6) 2 0 ____ 3 0 ____ 3 0 ____ 2.0

PZN Adjusted Runoff Curve Number (interpolate between nearest whole number PZN conditions) (Sections 4 1 2 4 and 4 2 4, Tables 4-6 and 4-10) $CN_{10 \text{ or } 20}$ 91 $CN_X$ 92 $CN_{20 \text{ or } 40}$ 97

Watershed Length (L) (Section 4 3 1) 80 – miles

Length to Centroid ($L_c$) (Section 4 3 1) .38 – miles

Slope (s) (Section 4 3 1) 644 9 – feet/mile Basin $\bar{n}$ Factor (Section 4 3 5) 0.045

Corps lag ($T_L$) = 24 $\bar{n}$ $((L \times L_c)/s^{0.5})^m$ (Section 4 3 1 1)
OR
Corps lag ($T_L$) = 0 8 $T_c$ (Section 4 3 1 2) Lag Time 0.201 – hours

Time to Peak = 0 862 x Corps lag (Section 4 1 5 5) Time to Peak 0.173 – hours

$NRCS_{LAG}$ = 0.132 hours

**WORKSHEET 4-3** Harmony Grove Village (name of project) **Peak Discharge Computation**

*****For use with NRCS Hydrologic Method Computations*****

Items in boxes are required input parameters for the SDUH Peak Discharge Program

Computed by Rick Engineering Company Date _____

Project Identification (Drainage Area Name) Post Project Basin 1

Geographic location of center of drainage area Long _____ " Lat _____ "

Drainage Area 1.29 – square miles

Storm Frequency (Section 2 3) 10 – year

6-Hour Storm Duration Precipitation (Appendix B) 2.1 – inches

24-Hour Storm Duration Precipitation (Appendix B) 3.6 – inches

Precipitation Zone Number (PZN) (Section 4 1.2 4 and Appendix C) PZN = 1 0 1.6 2.0 ____ 3 0 ____ 4 0

LESS THAN A PZN Ajustment Factor for ~~5-year to~~ 35-year storm frequency (interpolate) (Section 4 1 2 4 and Table 4-6) 1 5 2 1 2 5 ____ 2.0 ____ 1 5

PZN Ajustment Factor for 35-year to 150-year storm frequency (interpolate) (Section 4 1.2.4 and Table 4-6) 2 0 ____ 3 0 ____ 3 0 ____ 2 0

PZN Adjusted Runoff Curve Number (interpolate between nearest whole number PZN conditions) (Sections 4 1 2 4 and 4.2 4, Tables 4-6 and 4-10) $CN_{1\ 0\ or\ 2\ 0}$ 74 $CN_X$ [ ] $CN_{2\ 0\ or\ 3\ 0}$ 88

Watershed Length (L) (Section 4.3 1) 1.48 – miles

Length to Centroid ($L_c$) (Section 4 3.1) 0 81 – miles

Slope (s) (Section 4 3 1) 60 9 – feet/mile

Basin $\bar{n}$ Factor (Section 4 3 5) 0.05

Corps lag ($T_L$) = 24 $\bar{n}$ $((L \times L_c)/s^{0\ 5})^m$ (Section 4 3 1.1)
OR
Corps lag ($T_L$) = 0 8 $T_c$ (Section 4 3 1.2)

Lag Time 0.589 – hours

Time to Peak = 0.862 x Corps lag (Section 4 1.5 5)

Time to Peak 0 508 – hours

0.466 – hour

**WORKSHEET 4-3** Harmony Grove Village (name of project) **Peak Discharge Computation**

*****For use with NRCS Hydrologic Method Computations*****

Items in boxes are required input parameters for the SDUH Peak Discharge Program.

Computed by Rick Engineering Company Date: 12/12/05

Project Identification (Drainage Area Name): Post Project Basin 2

Geographic location of center of drainage area: Long _____ " Lat: _____ "

Drainage Area 0.28 – square miles

Storm Frequency (Section 2 3) 10 – year

6-Hour Storm Duration Precipitation (Appendix B) 2.1 – inches

24-Hour Storm Duration Precipitation (Appendix B) 3.6 – inches

Precipitation Zone Number (PZN) (Section 4 1 2 4 and Appendix C) PZN = 1 0 1.6 2 0 ____ 3 0 ____ 4 0

LESS THAN A ~~5 year to~~ PZN Ajustment Factor for 35-year storm frequency (interpolate) (Section 4 1.2 4 and Table 4-6) 1 5 2 1 2 5 ____ 2 0 ____ 1 5

PZN Ajustment Factor for 35-year to 150-year storm frequency (interpolate) (Section 4 1 2 4 and Table 4-6) 2 0 ____ 3 0 ____ 3 0 ____ 2 0

PZN Adjusted Runoff Curve Number (interpolate between nearest whole number PZN conditions) (Sections 4 1 2 4 and 4 2.4, Tables 4-6 and 4-10) $CN_{1\,0\,or\,2\,0}$ 91 $CN_X$ 92 $CN_{2\,0\,or\,1\,0}$ 97

Watershed Length (L) (Section 4.3.1) 0.76 – miles

Length to Centroid ($L_c$) (Section 4 3 1) 0.25 – miles

Slope (s) (Section 4 3.1) 290 4 – feet/mile

Basin $\bar{n}$ Factor (Section 4 3 5) 0 018

Corps lag ($T_L$) = 24 $\bar{n}$ $((L \times L_c)/s^{0\,5})^m$ (Section 4 3 1 1)
OR
Corps lag ($T_L$) = 0 8 $T_c$ (Section 4 3 1 2)

Lag Time 0 078 – hours

Time to Peak = 0 862 x Corps lag (Section 4 1 5 5)

Time to Peak 0 067 – hours

0 026 hours

**WORKSHEET 4-3** Harmony Grove Village (name of project) **Peak Discharge Computation**

*****For use with NRCS Hydrologic Method Computations*****

Items in boxes are required input parameters for the SDUH Peak Discharge Program.

Computed by Rick Engineering Company Date 12/12/05

Project Identification (Drainage Area Name)· Post Project · Basin 3

Geographic location of center of drainage area· Long· ____ " Lat· ____ "

Drainage Area 0 19 – square miles

Storm Frequency (Section 2 3) 10 – year

6-Hour Storm Duration Precipitation (Appendix B) 2.1 – inches

24-Hour Storm Duration Precipitation (Appendix B) 3.6 – inches

| | | | | | | | |
|---|---|---|---|---|---|---|---|
| Precipitation Zone Number (PZN) (Section 4 1 2 4 and Appendix C) | PZN = 1 0 | 1 6 | 2.0 | ____ | 3 0 | ____ | 4 0 |
| LESS THAN A ~~5-year to~~ PZN Ajustment Factor for 35-year storm frequency (interpolate) (Section 4 1 2 4 and Table 4-6) | 1 5 | 2.6 | 2 5 | ____ | 2 0 | ____ | 1 5 |
| PZN Ajustment Factor for 35-year to 150-year storm frequency (interpolate) (Section 4 1.2 4 and Table 4-6) | 2 0 | ____ | 3 0 | ____ | 3 0 | ____ | 2 0 |

PZN Adjusted Runoff Curve Number (interpolate between nearest whole number PZN conditions) (Sections 4 1.2 4 and 4 2 4, Tables 4-6 and 4-10) $CN_{1\,0\text{ or }1\,0}$ 73 $CN_X$ 74 $CN_{2\,0\text{ or }3\,0}$ 87

Watershed Length (L) (Section 4 3 1) 0.66 – miles

Length to Centroid ($L_c$) (Section 4 3 1) 0.27 – miles

Slope (s) (Section 4 3 1) 776.9 – feet/mile

Basin $\bar{n}$ Factor (Section 4 3 5) 0.05

Corps lag ($T_L$) = 24 $\bar{n}$ $((L \times L_c)/s^{0\,5})^m$ (Section 4 3 1 1)
OR
Corps lag ($T_L$) = 0 8 $T_c$ (Section 4 3 1.2)

Lag Time. 0.176 – hours

Time to Peak = 0 862 x Corps lag (Section 4 1 5 5)

Time to Peak 0.152 – hours

$NRCS_{Lag}$ - 0.110 hours

**WORKSHEET 4-3** Harmony Grove Village (name of project) **Peak Discharge Computation**

*****For use with NRCS Hydrologic Method Computations*****

Items in boxes are required input parameters for the SDUH Peak Discharge Program.

Computed by Rick Engineering Company Date: 12/12/05

Project Identification (Drainage Area Name) Post Project Basin 4

Geographic location of center of drainage area: Long ____ " Lat: ____ "

Drainage Area [ ] – square miles

Storm Frequency (Section 2.3) [10] – year

6-Hour Storm Duration Precipitation (Appendix B) [2.1] – inches

24-Hour Storm Duration Precipitation (Appendix B) [3.6] – inches

Precipitation Zone Number (PZN) (Section 4 1 2 4 and Appendix C) PZN = 10 16 20 ____ 30 ____ 40

LESS THAN A ~~5-year to~~ PZN Ajustment Factor for 35-year storm frequency (interpolate) (Section 4 1 2 4 and Table 4-6) 15 21 25 ____ 20 ____ 15

PZN Ajustment Factor for 35-year to 150-year storm frequency (interpolate) (Section 4.1.2 4 and Table 4-6) 20 ____ 30 ____ 3.0 ____ 20

PZN Adjusted Runoff Curve Number (interpolate between nearest whole number PZN conditions) (Sections 4 1.2 4 and 4.2 4, Tables 4-6 and 4-10) $CN_{10 \text{ or } 20}$ 79 $CN_X$ [80] $CN_{20 \text{ or } 30}$ 91

Watershed Length (L) (Section 4.3 1) 0.76 – miles

Length to Centroid ($L_c$) (Section 4 3 1) 0.40 – miles

Slope (s) (Section 4 3 1) 488.4 – feet/mile

Basin $\bar{n}$ Factor (Section 4 3 5) 0.018

Corps lag ($T_L$) = 24 $\bar{n}$ $((L \times L_c)/s^{0.5})^m$ (Section 4 3 1 1)
OR
Corps lag ($T_L$) = 0 8 $T_c$ (Section 4 3 1 2)

Lag Time [0.085] – hours

Time to Peak = 0 862 x Corps lag (Section 4 1 5 5)

Time to Peak 0.073 – hours

$NRCS_{LAG}$ = 0.031 hours

**WORKSHEET 4-3** Harmony Grove Village (name of project) **Peak Discharge Computation**

*****For use with NRCS Hydrologic Method Computations*****

Items in boxes are required input parameters for the SDUH Peak Discharge Program.

Computed by Rick Engineering Company Date 12/12/05

Project Identification (Drainage Area Name) Post Project Basin 5

Geographic location of center of drainage area: Long _____ " Lat _____ "

Drainage Area [ ] – square miles

Storm Frequency (Section 2.3) [10] – year

6-Hour Storm Duration Precipitation (Appendix B) [2.1] – inches

24-Hour Storm Duration Precipitation (Appendix B) [3.6] – inches

Precipitation Zone Number (PZN) (Section 4.1.2.4 and Appendix C) PZN = 1.0 1.6 ____ 2.0 ____ 3.0 ____ 4.0

LESS THAN A ~~5-year to~~ PZN Ajustment Factor for 35-year storm frequency (interpolate) (Section 4.1.2.4 and Table 4-6) 1.5 2.1 ____ 2.5 ____ 2.0 ____ 1.5

PZN Ajustment Factor for 35-year to 150-year storm frequency (interpolate) (Section 4.1.2.4 and Table 4-6) 2.0 ____ 3.0 ____ 3.0 ____ 2.0

PZN Adjusted Runoff Curve Number (interpolate between nearest whole number PZN conditions) (Sections 4.1.2.4 and 4.2.4, Tables 4-6 and 4-10) $CN_{1.0 \text{ or } 2.0}$ 87 ____ $CN_X$ [88] $CN_{2.0 \text{ or } 3.0}$ 95 ____

Watershed Length (L) (Section 4.3.1) 0.95 – miles

Length to Centroid ($L_c$) (Section 4.3.1) 0.47 – miles

Slope (s) (Section 4.3.1) 992.6 – feet/mile

Basin $\bar{n}$ Factor (Section 4.3.5) 0.05

Corps lag ($T_L$) = 24 $\bar{n}$ $((L \times L_c)/s^{0.5})^m$ (Section 4.3.1.1)
OR
Corps lag ($T_L$) = 0.8 $T_c$ (Section 4.3.1.2)

Lag Time [0.238] – hours

Time to Peak = 0.862 x Corps lag (Section 4.1.5.5)

Time to Peak 0.205 – hours

$NRCS_{LAG}$ = 0.164 hours

**WORKSHEET 4-3** _____ (name of project) **Peak Discharge Computation**

*****For use with NRCS Hydrologic Method Computations*****

Items in boxes are required input parameters for the SDUH Peak Discharge Program.

Computed by: Rick Engineering Company Date: _____

Project Identification (Drainage Area Name) Post Project · Basin 6

Geographic location of center of drainage area Long _____ " Lat. _____ "

Drainage Area: [ ] – square miles

Storm Frequency (Section 2 3) [10] – year

6-Hour Storm Duration Precipitation (Appendix B) [2 1] – inches

24-Hour Storm Duration Precipitation (Appendix B) [3 6] – inches

Precipitation Zone Number (PZN) (Section 4 1 2 4 and Appendix C) PZN = 1.0 1.6 ____ 2 0 ____ 3 0 ____ 4 0

LESS THAN A ~~5-year to~~ PZN Ajustment Factor for 35-year storm frequency (interpolate) (Section 4 1 2 4 and Table 4-6) 1 5 2.1 ____ 2 5 ____ 2 0 ____ 1 5

PZN Ajustment Factor for 35-year to 150-year storm frequency (interpolate) (Section 4 1 2 4 and Table 4-6) 2 0 ____ 3 0 ____ 3 0 ____ 2 0

PZN Adjusted Runoff Curve Number (interpolate between nearest whole number PZN conditions) (Sections 4 1.2 4 and 4 2.4, Tables 4-6 and 4-10) $CN_{1\ 0\ or\ 2\ 0}$ 85 ____ $CN_X$ [86] $CN_{2\ 0\ or\ 3\ 0}$ 94

Watershed Length (L) (Section 4 3 1) 0.47 – miles

Length to Centroid ($L_c$) (Section 4 3 1) 0.32 – miles

Slope (s) (Section 4 3.1) 211.2 – feet/mile

Basin $\bar{n}$ Factor (Section 4 3 5) 0.018

Corps lag ($T_L$) = 24 $\bar{n}$ $((L \times L_c)/s^{0\ 5})^m$ (Section 4 3 1 1)
OR
Corps lag ($T_L$) = 0 8 $T_c$ (Section 4 3 1 2)

Lag Time: [0.076] – hours

Time to Peak = 0 862 x Corps lag (Section 4 1 5 5)

Time to Peak 0.066 – hours

$NRCS_{LAG}$ = 0.024 hours

**WORKSHEET 4-3** _____ (name of project) **Peak Discharge Computation**

*****For use with NRCS Hydrologic Method Computations*****

Items in boxes are required input parameters for the SDUH Peak Discharge Program

Computed by _____ Date: _____

Project Identification (Drainage Area Name): Post Project Basin 7

Geographic location of center of drainage area. Long _____ " Lat. _____ "

Drainage Area. 0.56 – square miles

Storm Frequency (Section 2 3) 10 – year

6-Hour Storm Duration Precipitation (Appendix B) 2.1 – inches

24-Hour Storm Duration Precipitation (Appendix B) 3.6 – inches

Precipitation Zone Number (PZN) (Section 4 1.2 4 and Appendix C) PZN = 1 0 1.6 2.0 ____ 3 0 ____ 4 0

LESS THAN A ~~5-year to~~ PZN Ajustment Factor for 35-year storm frequency (interpolate) (Section 4 1 2 4 and Table 4-6) 1 5 2.1 2 5 ____ 2 0 ____ 1 5

PZN Ajustment Factor for 35-year to 150-year storm frequency (interpolate) (Section 4 1 2 4 and Table 4-6) 2 0 ____ 3 0 ____ 3 0 ____ 2 0

PZN Adjusted Runoff Curve Number (interpolate between nearest whole number PZN conditions) (Sections 4 1 2 4 and 4 2.4, Tables 4-6 and 4-10) $CN_{1\,0\,or\,0}$ 84 $CN_x$ 85 $CN_{2\,0\,or\,0}$ 93

Watershed Length (L) (Section 4 3 1) 1.29 – miles

Length to Centroid ($L_c$) (Section 4 3 1) 0.61 – miles

Slope (s) (Section 4 3 1) 829.3 – feet/mile

Basin $\bar{n}$ Factor (Section 4 3 5) 0.05

Corps lag ($T_L$) = 24 $\bar{n}$ $((L \times L_c)/s^{0\,5})^m$ (Section 4 3 1 1)
OR
Corps lag ($T_L$) = 0 8 $T_c$ (Section 4 3 1.2)

Lag Time 0.306 – hours

Time to Peak = 0 862 x Corps lag (Section 4 1 5 5)

Time to Peak 0.263 – hours

$NRCS_{LAG}$ = 0.222 hours

**WORKSHEET 4-3** _____ (name of project) **Peak Discharge Computation**

*****For use with NRCS Hydrologic Method Computations*****

Items in boxes are required input parameters for the SDUH Peak Discharge Program.

Computed by _____ Date._____

Project Identification (Drainage Area Name): Post Project · Basin 8

Geographic location of center of drainage area Long _____ " Lat _____ "

Drainage Area 0 05 – square miles

Storm Frequency (Section 2 3) 1 0 – year

6-Hour Storm Duration Precipitation (Appendix B) 2.1 – inches

24-Hour Storm Duration Precipitation (Appendix B) 3.6 – inches

Precipitation Zone Number (PZN) (Section 4.1.2 4 and Appendix C) PZN = 1 0 1.6 2.0 ____ 3.0 ____ 4 0

LESS THAN A PZN Ajustment Factor for ~~5-year to~~ 35-year storm frequency (interpolate) (Section 4 1 2 4 and Table 4-6) 1 5 2.1 2 5 ____ 2.0 ____ 1 5

PZN Ajustment Factor for 35-year to 150-year storm frequency (interpolate) (Section 4 1.2 4 and Table 4-6) 2 0 ____ 3 0 ____ 3 0 ____ 2 0

PZN Adjusted Runoff Curve Number (interpolate between nearest whole number PZN conditions). (Sections 4 1.2 4 and 4 2 4, Tables 4-6 and 4-10) $CN_{1\ 0\ or\ 2\ 0}$ 93 $CN_X$ 94 $CN_{2\ 0\ or\ 3\ 0}$ 98

Watershed Length (L) (Section 4 3 1) 0.28 – miles

Length to Centroid ($L_c$) (Section 4 3 1) 0.19 – miles

Slope (s) (Section 4 3 1) 76.0 – feet/mile

Basin $\bar{n}$ Factor (Section 4 3 5) 0.018

Corps lag ($T_L$) = 24 $\bar{n}$ $((L \times L_c)/s^{0\ 5})^m$ (Section 4 3 1.1)
OR
Corps lag ($T_L$) = 0 8 $T_c$ (Section 4 3 1.2)

Lag Time. 0.053 – hours

Time to Peak = 0 862 x Corps lag (Section 4 1 5 5)

Time to Peak · 0.046 – hours

$NRCS_{LAG}$ = 0.004 hour

**WORKSHEET 4-3** Harmony Grove Village (name of project) **Peak Discharge Computation**

*****For use with NRCS Hydrologic Method Computations*****

Items in boxes are required input parameters for the SDUH Peak Discharge Program

Computed by: Rick Engineering Company Date: _____

Project Identification (Drainage Area Name): Post Project Basin 9

Geographic location of center of drainage area. Long _____ " Lat _____ "

Drainage Area: 0.04 – square miles

Storm Frequency (Section 2 3): 10 – year

6-Hour Storm Duration Precipitation (Appendix B): 2.1 – inches

24-Hour Storm Duration Precipitation (Appendix B): 3.6 – inches

Precipitation Zone Number (PZN). (Section 4 1 2 4 and Appendix C) PZN = 1.0 1.6 ____ 2 0 ____ 3 0 ____ 4 0

LESS THAN A ~~5-year to~~ PZN Ajustment Factor for 35-year storm frequency (interpolate) (Section 4 1 2 4 and Table 4-6) 1 5 2.1 ____ 2 5 ____ 2 0 ____ 1 5

PZN Ajustment Factor for 35-year to 150-year storm frequency (interpolate) (Section 4 1 2 4 and Table 4-6) 2 0 ____ 3 0 ____ 3 0 ____ 2 0

PZN Adjusted Runoff Curve Number (interpolate between nearest whole number PZN conditions) (Sections 4 1 2.4 and 4.2 4, Tables 4-6 and 4-10) $CN_{1\,0\,or\,2\,0}$ 93 $CN_X$ 94 $CN_{2\,0\,or\,3\,0}$ 98

Watershed Length (L) (Section 4 3 1) 0.23 – miles

Length to Centroid ($L_c$) (Section 4 3 1) 0.13 – miles

Slope (s) (Section 4 3 1) 44.0 – feet/mile

Basin $\bar{n}$ Factor (Section 4 3 5) 0.018

Corps lag ($T_L$) = 24 $\bar{n}$ $((L \times L_c)/s^{0\,5})^m$ (Section 4 3 1 1)
OR
Corps lag ($T_L$) = 0.8 $T_c$ (Section 4 3 1 2)

Lag Time: 0.055 – hours

Time to Peak = 0 862 x Corps lag (Section 4 1 5 5)

Time to Peak 0.048 – hours

$NRCS_{LAG}$ = 0.006 hour

**WORKSHEET 4-3** Harmony Grove Village (name of project) **Peak Discharge Computation**

*****For use with NRCS Hydrologic Method Computations*****

Items in boxes are required input parameters for the SDUH Peak Discharge Program.

Computed by Rick Engineering Company Date: _____

Project Identification (Drainage Area Name) Post - Project Basin 10

Geographic location of center of drainage area: Long _____ " Lat _____ "

Drainage Area: 0.13 – square miles

Storm Frequency (Section 2 3) 10 – year

6-Hour Storm Duration Precipitation (Appendix B) 2 1 – inches

24-Hour Storm Duration Precipitation (Appendix B) 3 6 – inches

Precipitation Zone Number (PZN) (Section 4 1 2 4 and Appendix C) PZN = 1 0 1 6 2 0 ____ 3 0 ____ 4 0

LESS THAN A ~~5-year to~~ PZN Ajustment Factor for 35-year storm frequency (interpolate) (Section 4 1.2 4 and Table 4-6) 1 5 2 1 2 5 ____ 2.0 ____ 1 5

PZN Ajustment Factor for 35-year to 150-year storm frequency (interpolate) (Section 4 1.2 4 and Table 4-6) 2 0 ____ 3 0 ____ 3 0 ____ 2.0

PZN Adjusted Runoff Curve Number (interpolate between nearest whole number PZN conditions) (Sections 4 1 2 4 and 4 2 4, Tables 4-6 and 4-10) $CN_{10 \text{ or } 20}$ 91 $CN_X$ 92 $CN_{20 \text{ or } 30}$ 97

Watershed Length (L) (Section 4 3 1): .80 – miles

Length to Centroid ($L_c$) (Section 4 3 1) 3 8 – miles

Slope (s) (Section 4 3 1) 6 4 9 9 – feet/mile

Basin $\bar{n}$ Factor (Section 4 3 5) 0.045

Corps lag ($T_L$) = 24 $\bar{n}$ $((L \times L_c)/s^{0.5})^m$ (Section 4 3 1.1)
OR
Corps lag ($T_L$) = 0 8 $T_c$ (Section 4 3 1 2)

Lag Time 0.201 – hours

Time to Peak = 0 862 x Corps lag (Section 4 1 5 5)

Time to Peak 0.173 – hours

$NRCS_{LAG}$ = 0.132 hour

# APPENDIX C

## Isopluvial Maps

# County of San Diego Hydrology Manual

*Rainfall Isopluvials*

**2 Year Rainfall Event - 6 Hours**

Isopluvial (inches)

$P_6 = 1.5$ inches

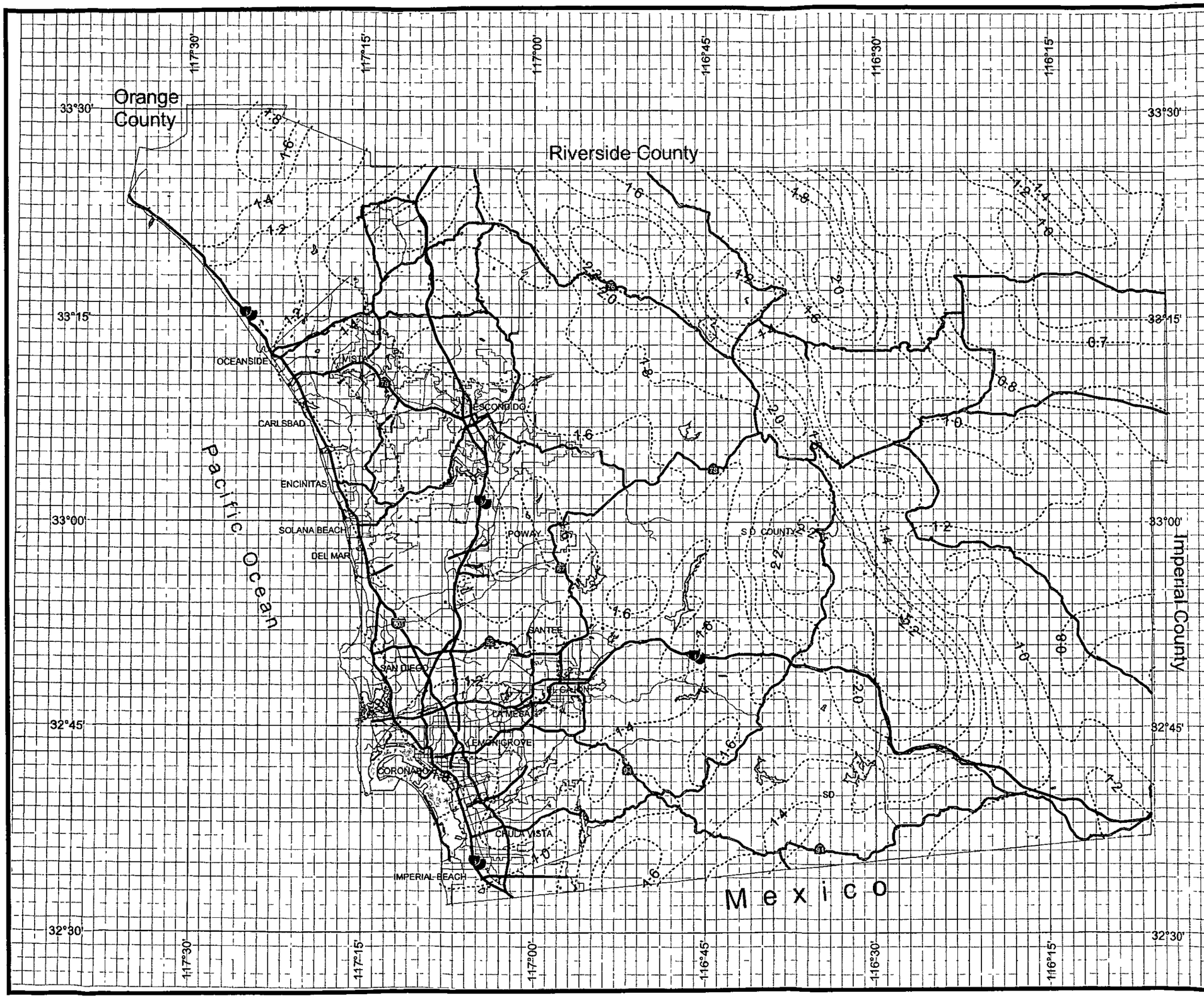


DPW GIS
Department of Public Works
Geographic Information Services

SanGIS
We Have San Diego Covered!

THIS MAP IS PROVIDED WITHOUT WARRANTY OF ANY KIND EITHER EXPRESS OR IMPLIED INCLUDING BUT NOT LIMITED TO THE IMPLIED WARRANTIES OF MERCHANTABILITY AND FITNESS FOR A PARTICULAR PURPOSE. Copyright SanGIS All Rights Reserved.

This products may contain information from the SANDAG Regional Information System which cannot be reproduced without the written permission of SANDAG

This product may contain information which has been reproduced with permission granted by Thomas Brothers Maps

N W E S

3 0 3 Miles

# County of San Diego Hydrology Manual

*Rainfall Isopluvials*

**2 Year Rainfall Event - 24 Hours**

Isopluvial (inches)

$P_{24}$ = 2.4 inches

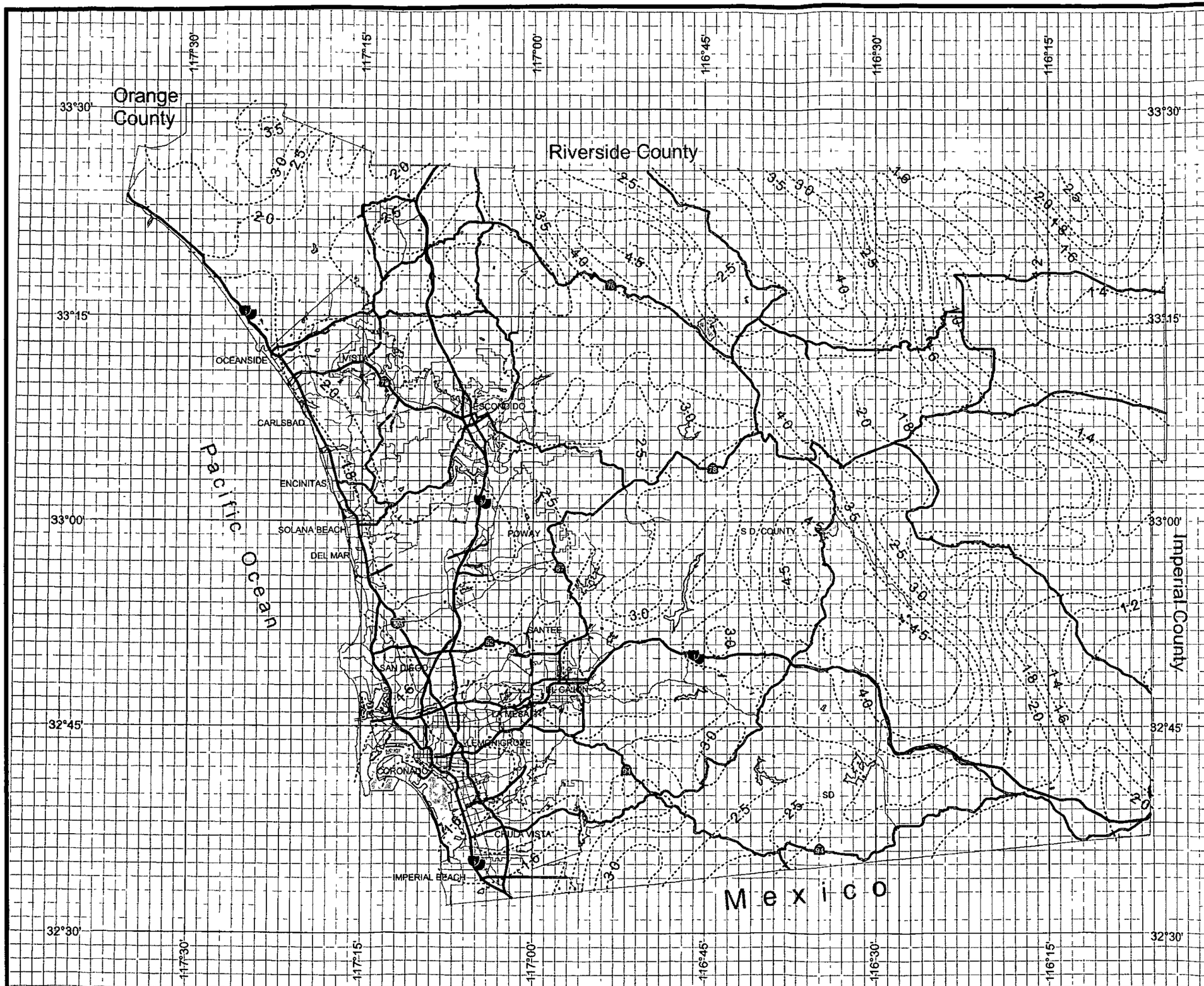


DPW GIS
Department of Public Works Geographic Information Services

SanGIS
We Have San Diego Covered!

N
W E
S

THIS MAP IS PROVIDED WITHOUT WARRANTY OF ANY KIND EITHER EXPRESS OR IMPLIED INCLUDING BUT NOT LIMITED TO THE IMPLIED WARRANTIES OF MERCHANTABILITY AND FITNESS FOR A PARTICULAR PURPOSE
Copyright SanGIS All Rights Reserved

This products may contain information from the SANDAG Regional Information System which cannot be reproduced without the written permission of SANDAG

This product may contain information which has been reproduced with permission granted by Thomas Brothers Maps.

3 0 3 Miles

# County of San Diego Hydrology Manual

*Rainfall Isopluvials*

**10 Year Rainfall Event - 6 Hours**

Isopluvial (inches)

$P_6$ = 2.1 inches

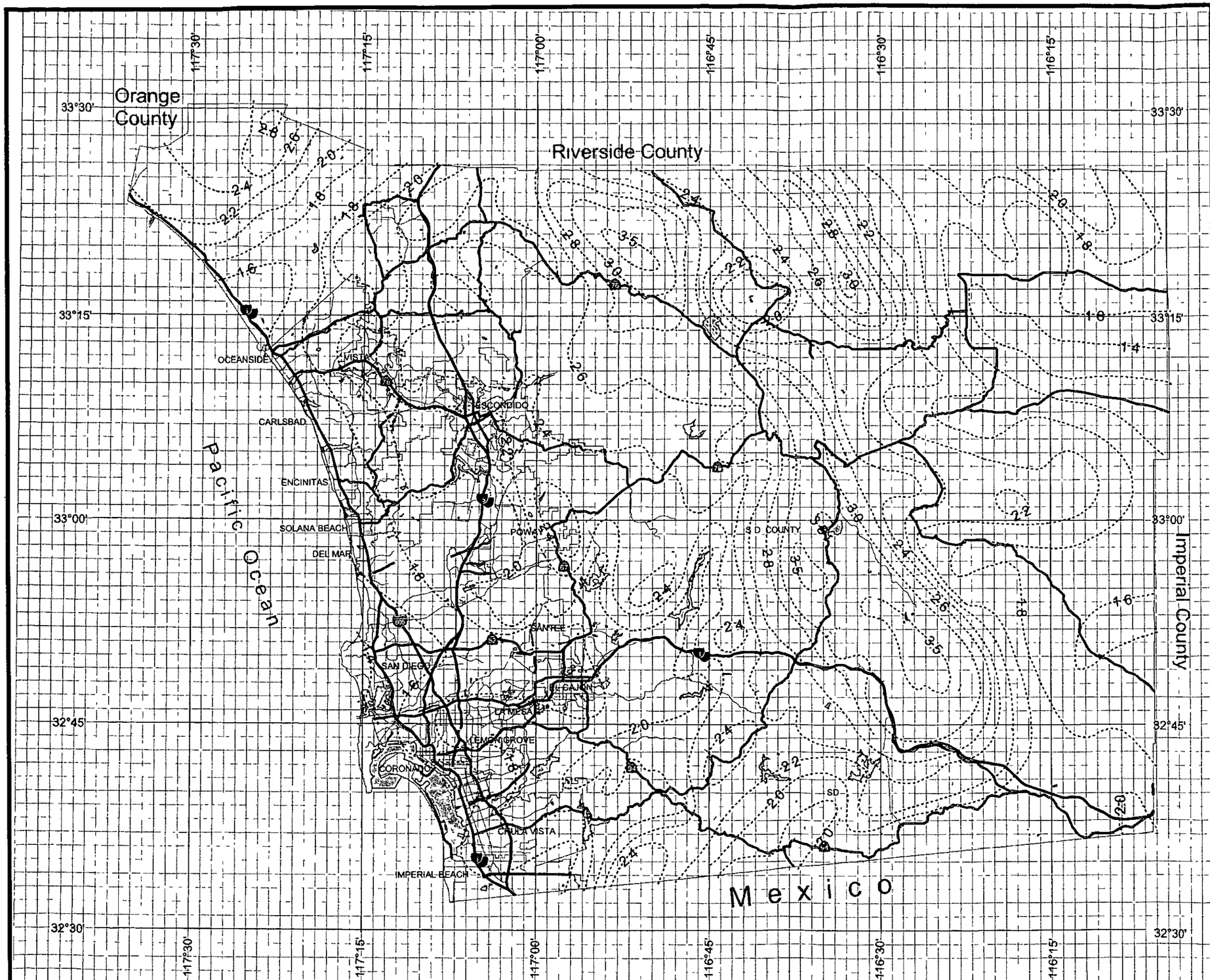


DPW GIS
Department of Public Works
Geographic Information Services

SanGIS
We Have San Diego Covered!

N
W E
S

THIS MAP IS PROVIDED WITHOUT WARRANTY OF ANY KIND EITHER EXPRESS OR IMPLIED INCLUDING BUT NOT LIMITED TO THE IMPLIED WARRANTIES OF MERCHANTABILITY AND FITNESS FOR A PARTICULAR PURPOSE
Copyright SanGIS All Rights Reserved.

This products may contain information from the SANDAG Regional Information System which cannot be reproduced without the written permission of SANDAG

This product may contain information which has been reproduced with permission granted by Thomas Brothers Maps

3 0 3 Miles

# County of San Diego Hydrology Manual

*Rainfall Isopluvials*

**10 Year Rainfall Event - 24 Hours**

Isopluvial (inches)

$P_{24}$ = 3.6 inches

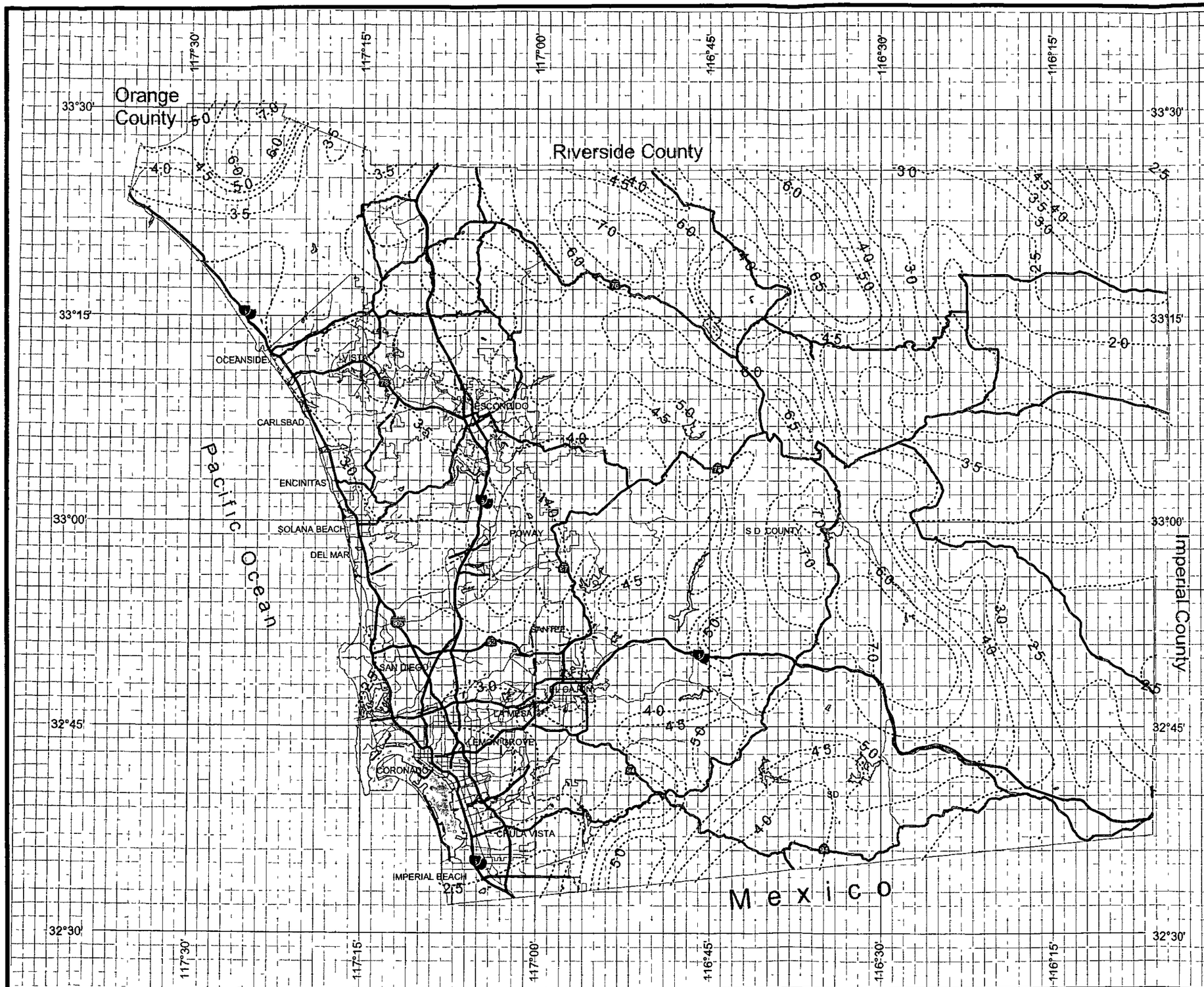


DPW GIS
Department of Public Works
Geographic Information Services Division

SanGIS
We Have San Diego Covered!

N
W E
S

THIS MAP IS PROVIDED WITHOUT WARRANTY OF ANY KIND EITHER EXPRESS OR IMPLIED INCLUDING BUT NOT LIMITED TO THE IMPLIED WARRANTIES OF MERCHANTABILITY AND FITNESS FOR A PARTICULAR PURPOSE
Copyright SanGIS All Rights Reserved

This products may contain information from the SANDAG Regional Information System which cannot be reproduced without the written permission of SANDAG

This product may contain information which has been reproduced with permission granted by Thomas Brothers Maps

3 0 3 Miles

# County of San Diego Hydrology Manual

*Rainfall Isopluvials*

**100 Year Rainfall Event - 6 Hours**

Isopluvial (inches)

$P_6 = 3.3$ inches

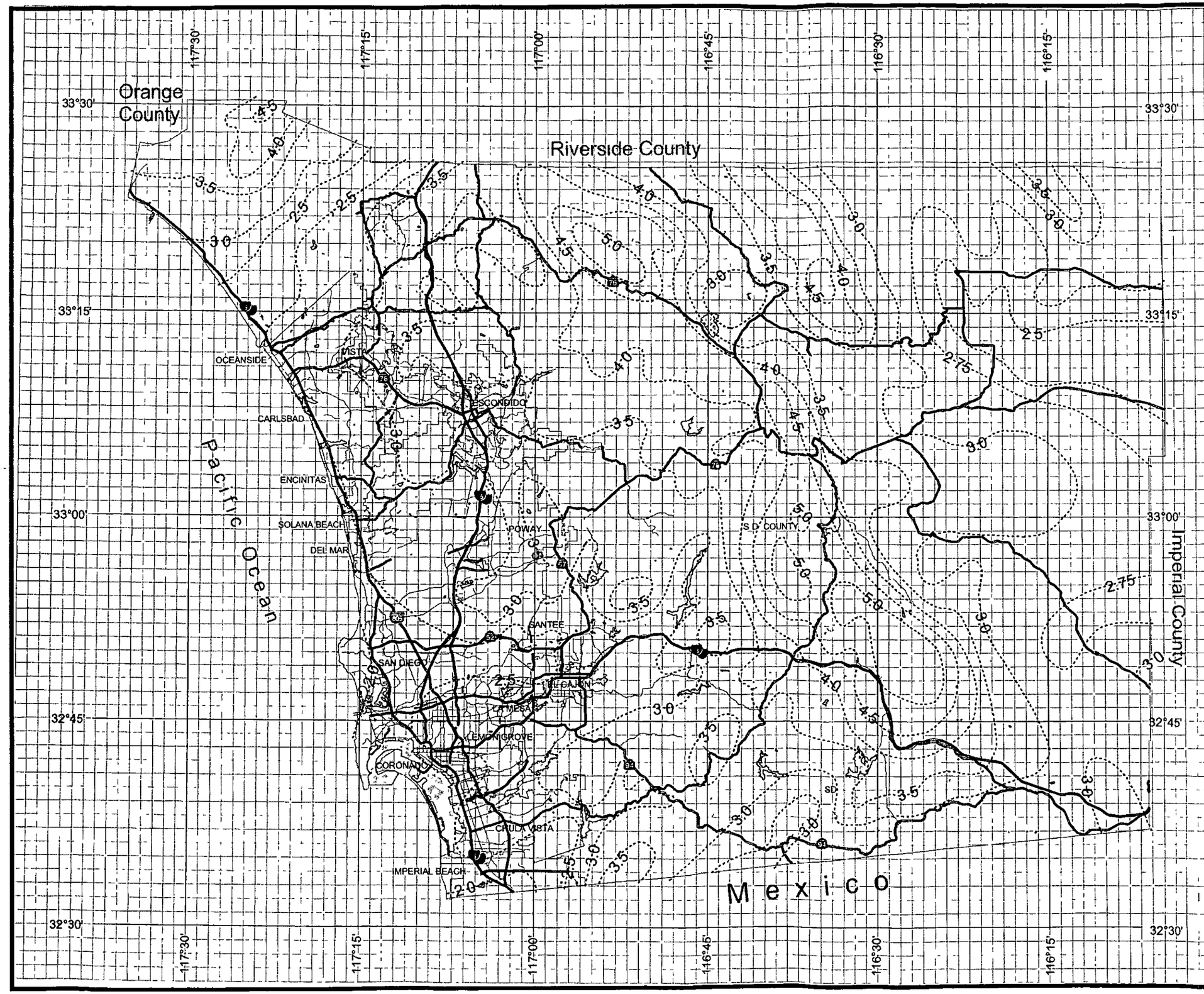


DPW GIS
Department of Public Works Geographic Information Services

SanGIS
We Have San Diego Covered!

N
W E
S

THIS MAP IS PROVIDED WITHOUT WARRANTY OF ANY KIND EITHER EXPRESS OR IMPLIED INCLUDING BUT NOT LIMITED TO THE IMPLIED WARRANTIES OF MERCHANTABILITY AND FITNESS FOR A PARTICULAR PURPOSE.
Copyright SanGIS All Rights Reserved.

This products may contain information from the SANDAG Regional Information System which cannot be reproduced without the written permission of SANDAG

This product may contain information which has been reproduced with permission granted by Thomas Brothers Maps.

3 0 3 Miles

# County of San Diego Hydrology Manual

*Rainfall Isopluvials*

**100 Year Rainfall Event - 24 Hours**

Isopluvial (inches)

$P_{24} = 5.7$ inches

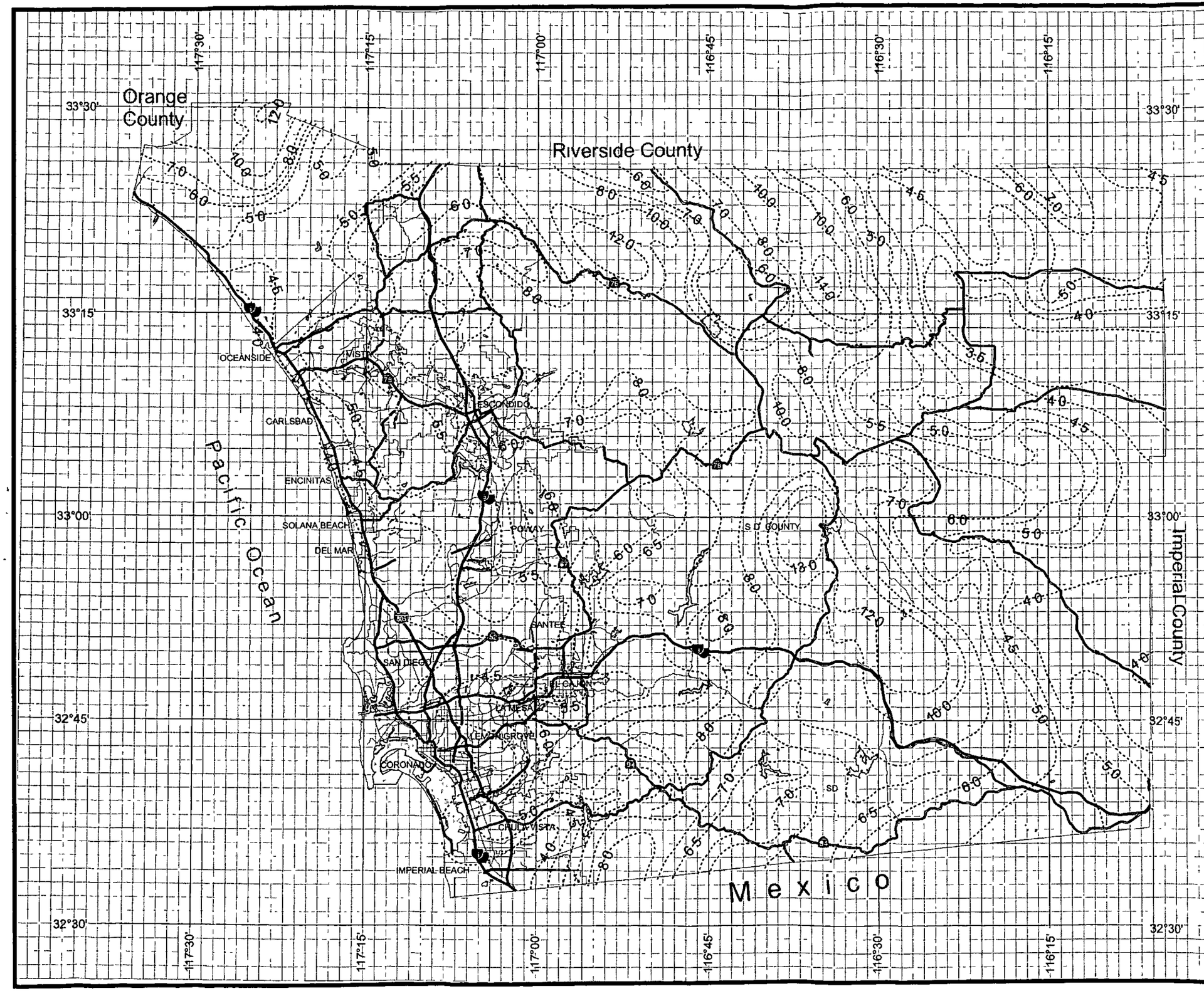


DPW GIS
Department of Public Works
Geographic Information Services

SanGIS
We Have San Diego Covered!

N
W E
S

THIS MAP IS PROVIDED WITHOUT WARRANTY OF ANY KIND EITHER EXPRESS OR IMPLIED INCLUDING BUT NOT LIMITED TO THE IMPLIED WARRANTIES OF MERCHANTABILITY AND FITNESS FOR A PARTICULAR PURPOSE
Copyright SanGIS All Rights Reserved

This products may contain information from the SANDAG Regional Information System which cannot be reproduced without the written permission of SANDAG

This product may contain information which has been reproduced with permission granted by Thomas Brothers Maps

3 0 3 Miles

# APPENDIX D

## 2-Year HEC-1 Analyses for the Pre- and Post-Project Conditions

# 2-Year Storm Event, Pre-Project Condition

```
****************************************
*                                      *
*   FLOOD HYDROGRAPH PACKAGE  (HEC-1)  *
*              JUN   1998              *
*           VERSION 4 1                *
*                                      *
*  RUN DATE   16JAN06  TIME  08 43 29  *
*                                      *
****************************************
```

```
****************************************
*                                      *
*    U S  ARMY CORPS OF ENGINEERS      *
*    HYDROLOGIC ENGINEERING CENTER     *
*          609 SECOND STREET           *
*       DAVIS, CALIFORNIA 95616        *
*           (916) 756-1104             *
*                                      *
****************************************
```

```
X     X  XXXXXXX   XXXXX           X
X     X  X        X     X         XX
X     X  X        X                X
XXXXXXX  XXXX     X        XXXXX   X
X     X  X        X                X
X     X  X        X     X          X
X     X  XXXXXXX   XXXXX          XXX
```

THIS PROGRAM REPLACES ALL PREVIOUS VERSIONS OF HEC-1 KNOWN AS HEC1 (JAN 73), HEC1GS, HEC1DB, AND HEC1KW

THE DEFINITIONS OF VARIABLES -RTIMP- AND -RTIOR- HAVE CHANGED FROM THOSE USED WITH THE 1973-STYLE INPUT STRUCTURE
THE DEFINITION OF -AMSKK- ON RM-CARD WAS CHANGED WITH REVISIONS DATED 28 SEP 81  THIS IS THE FORTRAN77 VERSION
NEW OPTIONS  DAMBREAK OUTFLOW SUBMERGENCE , SINGLE EVENT DAMAGE CALCULATION, DSS WRITE STAGE FREQUENCY,
DSS READ TIME SERIES AT DESIRED CALCULATION INTERVAL  LOSS RATE GREEN AND AMPT INFILTRATION
KINEMATIC WAVE  NEW FINITE DIFFERENCE ALGORITHM

```
          LINE          ID       1       2       3       4       5       6       7       8       9      10

                        *DIAGRAM
             1          ID   HARMONY GROVE HEC-1 FOR 2-YEAR Q                 14312B  01/16/06
             2          ID   PRE-PROJECT CONDITION
             3          ID   EXISTING LANDUSES FOR ENTIRE WATERSHEDS
             4          ID   PRE-PROJECT CONDITION
             5          ID   THIS MODEL USES EXISTING LAND USES FOR WITHIN PROJECT BOUNDARY HOWEVER USES
             6          ID   ULTIMATE LAND USE FOR THE WATERSHEDS OUTSIDE THE PROJECT BOUNDARY
             7          ID   THE BASIN FACTOR FOR THE THE WATERSHED WAS DETERMINED TO BE 0 05
             8          ID   REMOVED KM CARD BASIN AREA 2 8 SQUARE MILES (NO CHANGE IN Q)
             9          ID   FN  HG_2 HC1
*** FREE ***
            10          IT       5 01JAN90    1200     300
            11          IO       5       1

            12          KK   BAS_1
            13          KM   NESTED STORM PER COUNTY OF SAN DIEGO HYDROLOGY MANUAL
            14          KM   COPYRIGHT 2003 RICK ENGINEERING COMPANY
            15          KM   THE FOLLOWING IT CARD MUST BE USED IN YOUR DATA SET
            16          KM   IT 5 01JAN90 1200 300
            17          KM   6HR RAINFALL IS  1 5  INCHES
            18          KM   24HR RAINFALL IS  2 4  INCHES
            19          KM   DAR30 =   96752
            20          KM   DAR60 =   9832
            21          KM   DAR180 =   9888
            22          KM   DAR360 =   9916
            23          KM   DAR1440 =   9944
            24          IN       5 01JAN90    1200     300
            25          PI   00282   00284   00284   00286   00286   00288   00288    0029    0029   00292
            26          PI   00293   00294   00295   00296   00297   00298   00299   00301   00301    0030
            27          PI   00304   00305   00306   00308   00309    0031   00311   00313   00314   00315
            28          PI   00316   00318   00319    0032   00321   00323   00324   00326   00327   00329
            29          PI    0033   00332   00333   00335   00336   00338   00339   00341   00342   00344
            30          PI   00345   00347   00348   00351   00352   00354   00355   00357   00359    0036
            31          PI   00362   00365   00366   00368    0037   00372   00374   00376   00378    0038
            32          PI   00382   00385   00386   00389    0039   00393   00395   00398   00399   00402
            33          PI   00404   00407   00409   00412   00414   00417   00419   00423   00425    0042
            34          PI    0043   00434   00436    0044   00442   00446   00448   00452   00454   00459
            35          PI   00461   00465   00468   00472   00475   00479   00482   00487    0049   00495
            36          PI   00498   00503   00506   00512   00514    0052   00524    0053   00533   00539
            37          PI   00543    0055   00553    0056   00564   00572   00575   00583   00587   00596
            38          PI     006   00609   00613   00623   00628   00637   00643   00653   00658    0067
            39          PI   00675   00687   00693    0075   00756    0077   00777   00792     008   00816
            40          PI   00824   00841    0085   00869   00879   00899    0091   00933   00944   00969
            41          PI   00982    0101   01025   01056   01072   01107   01126   01184   01204    0125
            42          PI   01274   01327   01355   01418   01452   01528    0157   01664   01717   01838
            43          PI   01908    0207   02166   02581   02712    0305   03275   03773   04297   06309
            44          PI    0889   31865    0506   03558   02866   02274   01985   01775   01615   01489
            45          PI   01386     013   01226   01145   01089    0104   00996   00957   00921   00889
            46          PI   00859   00832   00808   00785   00763     007   00681   00664   00648   00632
            47          PI   00618   00604   00592   00579   00568   00557   00546   00536   00527    0051
            48          PI   00509     005   00492   00484   00477    0047   00463   00456    0045   00444
            49          PI   00438   00432   00426   00421   00416   00411   00406   00401   00396    0039
            50          PI   00387   00383   00379   00375   00371   00367   00363    0036   00356   00353
            51          PI   00349   00346   00343    0034   00337   00334   00331   00328   00325   00322
            52          PI    0032   00317   00314   00312   00309   00307   00305   00302     003   00298
```

```
LINE          ID       1       2       3       4       5       6       7       8       9      10

  53          PI   00295   00293   00291   00289   00287   00285   00283       0       0       0
  54          PI       0       0       0       0       0       0       0       0       0       0
  55          PI       0       0
  56          BA     1 29
  57          LS       0      74
  58          UD     466

  59          KK RTE_1-2
  60          KM   ROUTING BASIN 1 TO BASIN 2
  61          RD    3000    0166      05       0    TRAP      15     4 5

  62          KK   BAS_2
  63          KM   NEXT DOWNSTREAM WATERSHED
  64          BA      28
  65          LS       0      86
  66          UD     146

  67          KK B_1+B_2
  68          HC       2

  69          KK   BAS_3
  70          KM   START NEW UPSTREAM WATERSHED
  71          BA      19
  72          LS       0      74
  73          UD      11

  74          KK RTE_3-4
  75          KM   ROUTING BASIN 3 TO BASIN 4
  76          RD    3500      04      05       0    TRAP      10     2 5

  77          KK   BAS_4
  78          KM   NEXT DOWNSTREAM WATERSHED
  79          BA      18
  80          LS       0      77
  81          UD     161

  82          KK   B3+B4
  83          KM   COMBINING BASIN 3 AND BASIN 4
  84          HC       2

  85          KK   BAS_5
  86          KM   START NEW UPSTREAM WATERSHED
  87          BA      19
  88          LS       0      85
  89          UD     164

  90          KKB3+B4+B5
  91          KM   COMBINING THE ALREADY ROUTED 3 INTO 4 TO BASIN 5
  92          HC       2
```

```
LINE          ID       1       2       3       4       5       6       7       8       9      10

 93           KK RTE_5-6
 94           KM   ROUTING BASIN 5 TO BASIN 6
 95           RD    2500      04      05       0    TRAP      10     2 5

 96           KK   BAS_6
 97           KM   NEXT DOWNSTREAM WATERSHED
 98           BA      06
 99           LS       0      80
100           UD     140

101           KK B_5+B_6
102           HC       2

103           KK   BAS_7
104           KM   START NEW UPSTREAM WATERSHED
105           BA      56
106           LS       0      84
107           UD     222

108           KK RTE_7-8
109           KM   ROUTING BASIN 7 TO BASIN 8
110           RD    1500     033      05       0    TRAP      10     2 5

111           KK   BAS_8
112           KM   NEXT DOWNSTREAM WATERSHED
113           BA      05
114           LS       0      85
115           UD     085

116           KK B_7+B_8
117           HC       2

118           KKB8+B6+B2
119           KM   COMBINE 8,6,2
120           HC       3

121           KK   BAS_9
122           KM   MOST DOWNSTREAM WATERSHED
123           BA      04
124           LS       0      91
125           UD     091

126           KK B_8+B_9
127           KM   CONFLUENCE ALL STREAMS AT BOTTOM
128           HC       2

129           KK  BAS_10
130           KM   NEXT DOWNSTREAM WATERSHED
131           BA      13
132           LS       0      84
133           UD     151
```

```
LINE          ID      1       2       3       4       5       6       7       8       9      10

 134          KK  B9+B10
 135          KM   COMBINING BASIN 9 AND BASIN 10
 136          HC       2
 137          ZZ
```

SCHEMATIC DIAGRAM OF STREAM NETWORK

```
INPUT
 LINE      (V) ROUTING          (--->) DIVERSION OR PUMP FLOW

  NO       ( ) CONNECTOR        (<---) RETURN OF DIVERTED OR PUMPED FLOW

   12       BAS_1
                V
                V
   59     RTE_1-2


   62                  BAS_2


   67     B_1+B_2


   69                  BAS_3
                           V
                           V
   74                RTE_3-4


   77                             BAS_4


   82                  B3+B4


   85                             BAS_5


   90               B3+B4+B5
                           V
                           V
   93                RTE_5-6


   96                             BAS_6


  101                B_5+B_6


  103                            BAS_7
                                     V
                                     V
  108                           RTE_7-8


  111                                          BAS_8


  116                           B_7+B_8


  118    B8+B6+B2
```

121 BAS_9

126 B_8+B_9

129 BAS_10

134 B9+B10

(***) RUNOFF ALSO COMPUTED AT THIS LOCATION

```
****************************************                                    ****************************************
*                                      *                                    *
*   FLOOD HYDROGRAPH PACKAGE  (HEC-1)  *                                    *    U S  ARMY CORPS OF ENGINEERS
*              JUN   1998              *                                    *    HYDROLOGIC ENGINEERING CENTER
*           VERSION 4 1                *                                    *          609 SECOND STREET
*                                      *                                    *       DAVIS, CALIFORNIA 95616
*  RUN DATE   16JAN06  TIME  08 43 29  *                                    *           (916) 756-1104
*                                      *                                    *
****************************************                                    ****************************************
```

```
                    HARMONY GROVE HEC-1 FOR 2-YEAR Q                14312B  01/16/06
                    PRE-PROJECT CONDITION
                    EXISTING LANDUSES FOR ENTIRE WATERSHEDS
                    PRE-PROJECT CONDITION
                    THIS MODEL USES EXISTING LAND USES FOR WITHIN PROJECT BOUNDARY HOWEVER USES
                    ULTIMATE LAND USE FOR THE WATERSHEDS OUTSIDE THE PROJECT BOUNDARY
                    THE BASIN FACTOR FOR THE THE WATERSHED WAS DETERMINED TO BE 0 05
                    REMOVED KM CARD BASIN AREA 2 8 SQUARE MILES (NO CHANGE IN Q)
                    FN  HG_2 HC1

 11 IO        OUTPUT CONTROL VARIABLES
                  IPRNT          5  PRINT CONTROL
                  IPLOT          1  PLOT CONTROL
                  QSCAL          0  HYDROGRAPH PLOT SCALE

    IT        HYDROGRAPH TIME DATA
                   NMIN          5  MINUTES IN COMPUTATION INTERVAL
                  IDATE     1JAN90  STARTING DATE
                  ITIME       1200  STARTING TIME
                     NQ        300  NUMBER OF HYDROGRAPH ORDINATES
                 NDDATE     2JAN90  ENDING DATE
                 NDTIME       1255  ENDING TIME
                 ICENT         19  CENTURY MARK

              COMPUTATION INTERVAL      08 HOURS
                   TOTAL TIME BASE   24 92 HOURS

        ENGLISH UNITS
             DRAINAGE AREA          SQUARE MILES
             PRECIPITATION DEPTH    INCHES
             LENGTH, ELEVATION      FEET
             FLOW                   CUBIC FEET PER SECOND
             STORAGE VOLUME         ACRE-FEET
             SURFACE AREA           ACRES
             TEMPERATURE            DEGREES FAHRENHEIT
```

RUNOFF SUMMARY

FLOW IN CUBIC FEET PER SECOND

TIME IN HOURS, AREA IN SQUARE MILES

| OPERATION | STATION | PEAK FLOW | TIME OF PEAK | AVERAGE FLOW FOR MAXIMUM PERIOD 6-HOUR | 24-HOUR | 72-HOUR | BASIN AREA | MAXIMUM STAGE | TIME OF MAX STAGE |
|---|---|---|---|---|---|---|---|---|---|
| HYDROGRAPH AT | BAS_1 | 260 | 16 42 | 64 | 19 | 18 | 1 29 | | |
| ROUTED TO | RTE_1-2 | 259 | 16 58 | 64 | 19 | 18 | 1 29 | | |
| HYDROGRAPH AT | BAS_2 | 215 | 16 08 | 27 | 9 | 8 | 28 | | |
| 2 COMBINED AT | B_1+B_2 | 302 | 16 50 | 89 | 27 | 26 | 1 57 | | |
| HYDROGRAPH AT | BAS_3 | 86 | 16 08 | 9 | 3 | 3 | 19 | | |
| ROUTED TO | RTE_3-4 | 87 | 16 25 | 9 | 3 | 3 | 19 | | |
| HYDROGRAPH AT | BAS_4 | 80 | 16 08 | 11 | 3 | 3 | 18 | | |
| 2 COMBINED AT | B3+B4 | 142 | 16 25 | 20 | 6 | 6 | 37 | | |
| HYDROGRAPH AT | BAS_5 | 128 | 16 08 | 18 | 6 | 5 | 19 | | |
| 2 COMBINED AT | B3+B4+B5 | 262 | 16 17 | 38 | 12 | 11 | 56 | | |
| ROUTED TO | RTE_5-6 | 250 | 16 25 | 38 | 12 | 11 | 56 | | |
| HYDROGRAPH AT | BAS_6 | 35 | 16 08 | 4 | 1 | 1 | 06 | | |
| 2 COMBINED AT | B_5+B_6 | 269 | 16 25 | 42 | 13 | 12 | 62 | | |
| HYDROGRAPH AT | BAS_7 | 314 | 16 17 | 49 | 15 | 15 | 56 | | |
| ROUTED TO | RTE_7-8 | 303 | 16 25 | 50 | 15 | 15 | 56 | | |
| HYDROGRAPH AT | BAS_8 | 42 | 16 08 | 5 | 1 | 1 | 05 | | |
| 2 COMBINED AT | B_7+B_8 | 316 | 16 25 | 54 | 17 | 16 | 61 | | |
| 3 COMBINED AT | B8+B6+B2 | 838 | 16 17 | 185 | 57 | 55 | 2 80 | | |
| HYDROGRAPH AT | BAS_9 | 43 | 16 08 | 5 | 2 | 2 | 04 | | |
| 2 COMBINED AT | B_8+B_9 | 861 | 16 17 | 189 | 59 | 57 | 2 84 | | |
| HYDROGRAPH AT | BAS_10 | 89 | 16 08 | 11 | 4 | 3 | 13 | | |
| 2 COMBINED AT | B9+B10 | 942 | 16 17 | 201 | 62 | 60 | 2 97 | | |

SUMMARY OF KINEMATIC WAVE - MUSKINGUM-CUNGE ROUTING
(FLOW IS DIRECT RUNOFF WITHOUT BASE FLOW)

| ISTAQ | ELEMENT | DT (MIN) | PEAK (CFS) | TIME TO PEAK (MIN) | VOLUME (IN) | INTERPOLATED TO COMPUTATION INTERVAL DT (MIN) | PEAK (CFS) | TIME TO PEAK (MIN) | VOLUME (IN) |
|---|---|---|---|---|---|---|---|---|---|
| RTE_1-2 | MANE | 5 00 | 259 25 | 995 00 | 54 | 5 00 | 259 25 | 995 00 | 54 |

CONTINUITY SUMMARY (AC-FT) - INFLOW= 3738E+02 EXCESS= 0000E+00 OUTFLOW= 3731E+02 BASIN STORAGE= 1818E+00 PERCENT ERROR= - 3

| | | | | | | | | | |
|---|---|---|---|---|---|---|---|---|---|
| RTE_3-4 | MANE | 5 00 | 87 46 | 975 00 | 54 | 5 00 | 87 46 | 975 00 | 54 |

CONTINUITY SUMMARY (AC-FT) - INFLOW= 5512E+01 EXCESS= 0000E+00 OUTFLOW= 5517E+01 BASIN STORAGE= 5933E-02 PERCENT ERROR= - 2

| | | | | | | | | | |
|---|---|---|---|---|---|---|---|---|---|
| RTE_5-6 | MANE | 4 75 | 259 79 | 973 23 | 77 | 5 00 | 250 11 | 975 00 | 77 |

CONTINUITY SUMMARY (AC-FT) - INFLOW= 2293E+02 EXCESS= 0000E+00 OUTFLOW= 2293E+02 BASIN STORAGE= 1432E-01 PERCENT ERROR= - 1

| | | | | | | | | | |
|---|---|---|---|---|---|---|---|---|---|
| RTE_7-8 | MANE | 2 89 | 308 42 | 973 02 | 1 03 | 5 00 | 302 89 | 975 00 | 1 03 |

CONTINUITY SUMMARY (AC-FT) - INFLOW= 3067E+02 EXCESS= 0000E+00 OUTFLOW= 3067E+02 BASIN STORAGE= 5592E-02 PERCENT ERROR= 0

*** NORMAL END OF HEC-1 ***

# 2-Year Storm Event, Post-Project Condition

```
****************************************
*                                      *
*   FLOOD HYDROGRAPH PACKAGE  (HEC-1)  *
*              JUN   1998              *
*           VERSION 4 1                *
*                                      *
*  RUN DATE   16JAN06  TIME  08 40 49  *
*                                      *
****************************************
```

```
****************************************
*                                      *
*    U S  ARMY CORPS OF ENGINEERS      *
*    HYDROLOGIC ENGINEERING CENTER     *
*          609 SECOND STREET           *
*       DAVIS, CALIFORNIA 95616        *
*           (916) 756-1104             *
*                                      *
****************************************
```

```
X     X  XXXXXXX   XXXXX           X
X     X  X        X     X         XX
X     X  X        X                X
XXXXXXX  XXXX     X        XXXXX   X
X     X  X        X                X
X     X  X        X     X          X
X     X  XXXXXXX   XXXXX          XXX
```

THIS PROGRAM REPLACES ALL PREVIOUS VERSIONS OF HEC-1 KNOWN AS HEC1 (JAN 73), HEC1GS, HEC1DB, AND HEC1KW

THE DEFINITIONS OF VARIABLES -RTIMP- AND -RTIOR- HAVE CHANGED FROM THOSE USED WITH THE 1973-STYLE INPUT STRUCTURE
THE DEFINITION OF -AMSKK- ON RM-CARD WAS CHANGED WITH REVISIONS DATED 28 SEP 81  THIS IS THE FORTRAN77 VERSION
NEW OPTIONS  DAMBREAK OUTFLOW SUBMERGENCE , SINGLE EVENT DAMAGE CALCULATION, DSS WRITE STAGE FREQUENCY,
DSS READ TIME SERIES AT DESIRED CALCULATION INTERVAL  LOSS RATE GREEN AND AMPT INFILTRATION
KINEMATIC WAVE  NEW FINITE DIFFERENCE ALGORITHM

```
          LINE          ID       1       2       3       4       5       6       7       8       9      10

                        *DIAGRAM
             1          ID   HARMONY GROVE HEC-1 FOR 2-YEAR Q                  14312B  01/16/06
             2          ID   POST-PROJECT CONDITION INCLUDING NEW DEVELOPMENT IN EAST VILLAGE
             3          ID   THIS MODEL USES PROPOSED LAND USES FOR WITHING PROJECT BOUNDARY HOWEVER
             4          ID   USES ULTIMATE LAND USE FOR THE WATERSHEDS OUTSIDE THE PROJECT BOUNDARY
             5          ID   OUTSIDE THE PROJECT BOUNDRAY, THE BASIN FACTOR IS THE SAME FOR PRE AND POST
             6          ID   BASIN FACTOR INSIDE THE BOUNDARY IS 0 018
             7          ID   NEW RD CARD FOR BASIN 6
             8          ID   REMOVED KM CARD BASIN AREA 2 8 SQUARE MILES (NO CHANGE IN Q))
             9          ID   FN  HG_2P HC1
*** FREE ***
            10          IT       5 01JAN90    1200     300
            11          IO       5       1

            12          KK   BAS_1
            13          KM   NESTED STORM PER COUNTY OF SAN DIEGO HYDROLOGY MANUAL
            14          KM   COPYRIGHT 2003 RICK ENGINEERING COMPANY
            15          KM   THE FOLLOWING IT CARD MUST BE USED IN YOUR DATA SET
            16          KM   IT 5 01JAN90 1200 300
            17          KM   6HR RAINFALL IS  1 5  INCHES
            18          KM   24HR RAINFALL IS  2 4  INCHES
            19          KM   DAR30 =   96752
            20          KM   DAR60 =   9832
            21          KM   DAR180 =   9888
            22          KM   DAR360 =   9916
            23          KM   DAR1440 =   9944
            24          IN       5 01JAN90    1200     300
            25          PI   00282   00284   00284   00286   00286   00288   00288    0029    0029   00292
            26          PI   00293   00294   00295   00296   00297   00298   00299   00301   00301    0030
            27          PI   00304   00305   00306   00308   00309    0031   00311   00313   00314   00315
            28          PI   00316   00318   00319    0032   00321   00323   00324   00326   00327   00329
            29          PI    0033   00332   00333   00335   00336   00338   00339   00341   00342   00344
            30          PI   00345   00347   00348   00351   00352   00354   00355   00357   00359    0036
            31          PI   00362   00365   00366   00368    0037   00372   00374   00376   00378    0038
            32          PI   00382   00385   00386   00389    0039   00393   00395   00398   00399   00402
            33          PI   00404   00407   00409   00412   00414   00417   00419   00423   00425    0042
            34          PI    0043   00434   00436    0044   00442   00446   00448   00452   00454   00459
            35          PI   00461   00465   00468   00472   00475   00479   00482   00487    0049   00495
            36          PI   00498   00503   00506   00512   00514    0052   00524    0053   00533   00539
            37          PI   00543    0055   00553    0056   00564   00572   00575   00583   00587   00596
            38          PI     006   00609   00613   00623   00628   00637   00643   00653   00658    0067
            39          PI   00675   00687   00693    0075   00756    0077   00777   00792     008   00816
            40          PI   00824   00841    0085   00869   00879   00899    0091   00933   00944   00969
            41          PI   00982    0101   01025   01056   01072   01107   01126   01184   01204    0125
            42          PI   01274   01327   01355   01418   01452   01528    0157   01664   01717   01838
            43          PI   01908    0207   02166   02581   02712    0305   03275   03773   04297   06309
            44          PI    0889   31865    0506   03558   02866   02274   01985   01775   01615   01489
            45          PI   01386     013   01226   01145   01089    0104   00996   00957   00921   00889
            46          PI   00859   00832   00808   00785   00763     007   00681   00664   00648   00632
            47          PI   00618   00604   00592   00579   00568   00557   00546   00536   00527    0051
            48          PI   00509     005   00492   00484   00477    0047   00463   00456    0045   00444
            49          PI   00438   00432   00426   00421   00416   00411   00406   00401   00396    0039
            50          PI   00387   00383   00379   00375   00371   00367   00363    0036   00356   00353
            51          PI   00349   00346   00343    0034   00337   00334   00331   00328   00325   00322
            52          PI    0032   00317   00314   00312   00309   00307   00305   00302     003   00298
```

```
LINE          ID       1       2       3       4       5       6       7       8       9      10

  53          PI   00295   00293   00291   00289   00287   00285   00283       0       0       0
  54          PI       0       0       0       0       0       0       0       0       0       0
  55          PI       0       0
  56          BA    1 29
  57          LS       0      75
  58          UD     466

  59          KK  DETAIN
  60          RS       1    STOR      -1
  61          SV       0     8 0
  62          SQ       0     185
  63          SE     100     101

  64          KK RTE_1-2
  65          KM   ROUTING BASIN 1 TO BASIN 2
  66          KM   MANNINGS N VALUE FROM COUNTY OF SAN DIEGO 1993
  67          KM   1 PERCENT SLOPE
  68          RD    2500      01     075       0    TRAP      70       2

  69          KK   BAS_2
  70          KM   NEXT DOWNSTREAM WATERSHED
  71          BA      28
  72          LS       0      92
  73          UD     026

  74          KK B_1+B_2
  75          HC       2

  76          KK   BAS_3
  77          KM   START NEW UPSTREAM WATERSHED
  78          BA      19
  79          LS       0      74
  80          UD      11

  81          KK RTE_3-4
  82          KM   ROUTING BASIN 3 TO BASIN 4
  83          KM   MOSTLY NATRUAL CHANEL
  84          KM   SLOPE (810-670)/3500
  85          KM   FOR MANNING  05 SAME AS PRE UNLESS WERE HAVEING HABITAT MITIGATION  075
  86          RD    3500      04      05       0    TRAP      10     2 5

  87          KK   BAS_4
  88          KM   NEXT DOWNSTREAM WATERSHED
  89          BA      18
  90          LS       0      80
  91          UD     031

  92          KK   B3+B4
  93          KM   COMBINING BASIN 3 AND 4
  94          HC       2
```

```
LINE          ID      1       2       3       4       5       6       7       8       9      10

 95           KK   BAS_5
 96           KM   START NEW UPSTREAM WATERSHED
 97           BA      19
 98           LS       0      88
 99           UD     164

100           KKB3+B4+B5
101           KM   COMBINING THE ALREADY ROUTED 3INTO 4 TO BASIN 5
102           HC       2

103           KK RTE_5-6
104           KM   ROUTING BASIN 5 TO BASIN 6
105           KM   AROUND 2500
106           KM   MANNING N AVERAGE  075
107           KM   BOTTOM WIDTH 50 FT
108           KM   AVERAGE Z IS 2
109           RD    2500      01     075       0    TRAP      50       2

110           KK   BAS_6
111           KM   NEXT DOWNSTREAM WATERSHED
112           BA      06
113           LS       0      86
114           UD     024

115           KK B_5+B_6
116           HC       2

117           KK   BAS_7
118           KM   START NEW UPSTREAM WATERSHED
119           BA      56
120           LS       0      85
121           UD     222

122           KK  DETAIN
123           RS       1    STOR      -1
124           SV       0    11 0
125           SQ       0     110
126           SE     100     101

127           KK RTE_7-8
128           KM   ROUTING BASIN 7 TO BASIN 8
129           KM   1500 FOR LENGTH
130           KM   SLOPE
131           KM   108 IN DIAMETER PIPE
132           KM   NO Z VALUE SIDE SLOPE
133           RD    1500     033     012       0    CIRC       9

134           KK   BAS_8
135           KM   NEXT DOWNSTREAM WATERSHED
136           BA      05
137           LS       0      94
138           UD     004
```

```
LINE          ID       1       2       3       4       5       6       7       8       9      10

 139          KK B_7+B_8
 140          HC       2

 141          KKB8+B6+B2
 142          KM   COMBINE 8,6,2
 143          HC       3

 144          KK   BAS_9
 145          KM   MOST DOWNSTREAM WATERSHED
 146          BA      04
 147          LS       0      94
 148          UD     006

 149          KK B_8+B_9
 150          KM   CONFLUENCE ALL STREAMS AT BOTTOM
 151          HC       2

 152          KK  BAS_10
 153          KM   NEXT DOWNSTREAM WATERSHED
 154          BA      13
 155          LS       0      92
 156          UD     132

 157          KK  B9+B10
 158          KM   COMBINING BASIN 9 AND BASIN 10
 159          HC       2
 160          ZZ
```

SCHEMATIC DIAGRAM OF STREAM NETWORK

```
INPUT
 LINE      (V) ROUTING          (--->) DIVERSION OR PUMP FLOW

  NO       ( ) CONNECTOR        (<---) RETURN OF DIVERTED OR PUMPED FLOW

   12       BAS_1
                V
                V
   59      DETAIN
                V
                V
   64     RTE_1-2


   69                  BAS_2


   74     B_1+B_2


   76                  BAS_3
                           V
                           V
   81                RTE_3-4


   87                                BAS_4


   92                  B3+B4


   95                                BAS_5


  100               B3+B4+B5
                           V
                           V
  103                RTE_5-6


  110                                BAS_6


  115                B_5+B_6


  117                                BAS_7
                                         V
                                         V
  122                               DETAIN
                                         V
                                         V
  127                              RTE_7-8


  134                                          BAS_8
```

139 B_7+B_8

141 B8+B6+B2

144 BAS_9

149 B_8+B_9

152 BAS_10

157 B9+B10

(***) RUNOFF ALSO COMPUTED AT THIS LOCATION

```
****************************************                                    ****************************************
*                                      *                                    *
*   FLOOD HYDROGRAPH PACKAGE  (HEC-1)  *                                    *    U S  ARMY CORPS OF ENGINEERS
*              JUN   1998              *                                    *    HYDROLOGIC ENGINEERING CENTER
*           VERSION 4 1                *                                    *          609 SECOND STREET
*                                      *                                    *       DAVIS, CALIFORNIA 95616
*  RUN DATE   16JAN06  TIME  08 40 49  *                                    *           (916) 756-1104
*                                      *                                    *
****************************************                                    ****************************************
```

```
                         HARMONY GROVE HEC-1 FOR 2-YEAR Q                 14312B  01/16/06
                         POST-PROJECT CONDITION INCLUDING NEW DEVELOPMENT IN EAST VILLAGE
                         THIS MODEL USES PROPOSED LAND USES FOR WITHING PROJECT BOUNDARY HOWEVER
                         USES ULTIMATE LAND USE FOR THE WATERSHEDS OUTSIDE THE PROJECT BOUNDARY
                         OUTSIDE THE PROJECT BOUNDRAY, THE BASIN FACTOR IS THE SAME FOR PRE AND POST
                         BASIN FACTOR INSIDE THE BOUNDARY IS 0 018
                         NEW RD CARD FOR BASIN 6
                         REMOVED KM CARD BASIN AREA 2 8 SQUARE MILES (NO CHANGE IN Q))
                         FN  HG_2P HC1

  11 IO          OUTPUT CONTROL VARIABLES
                       IPRNT           5  PRINT CONTROL
                       IPLOT           1  PLOT CONTROL
                       QSCAL           0  HYDROGRAPH PLOT SCALE

     IT          HYDROGRAPH TIME DATA
                        NMIN           5  MINUTES IN COMPUTATION INTERVAL
                       IDATE      1JAN90  STARTING DATE
                       ITIME        1200  STARTING TIME
                          NQ         300  NUMBER OF HYDROGRAPH ORDINATES
                      NDDATE      2JAN90  ENDING DATE
                      NDTIME        1255  ENDING TIME
                       ICENT          19  CENTURY MARK

                  COMPUTATION INTERVAL      08 HOURS
                       TOTAL TIME BASE   24 92 HOURS

          ENGLISH UNITS
               DRAINAGE AREA          SQUARE MILES
               PRECIPITATION DEPTH    INCHES
               LENGTH, ELEVATION      FEET
               FLOW                   CUBIC FEET PER SECOND
               STORAGE VOLUME         ACRE-FEET
               SURFACE AREA           ACRES
               TEMPERATURE            DEGREES FAHRENHEIT

WARNING --- ROUTED OUTFLOW (    185 ) IS GREATER THAN MAXIMUM OUTFLOW (    185 ) IN STORAGE-OUTFLOW TABLE

WARNING --- ROUTED OUTFLOW (    110 ) IS GREATER THAN MAXIMUM OUTFLOW (    110 ) IN STORAGE-OUTFLOW TABLE
```

RUNOFF SUMMARY

FLOW IN CUBIC FEET PER SECOND

TIME IN HOURS, AREA IN SQUARE MILES

| OPERATION | STATION | PEAK FLOW | TIME OF PEAK | AVERAGE FLOW FOR MAXIMUM PERIOD 6-HOUR | 24-HOUR | 72-HOUR | BASIN AREA | MAXIMUM STAGE | TIME OF MAX STAGE |
|---|---|---|---|---|---|---|---|---|---|
| HYDROGRAPH AT | BAS_1 | 279 | 16 42 | 68 | 20 | 19 | 1 29 | | |
| ROUTED TO | DETAIN | 185 | 16 75 | 68 | 20 | 19 | 1 29 | 101 00 | 16 75 |
| ROUTED TO | RTE_1-2 | 185 | 17 00 | 68 | 20 | 19 | 1 29 | | |
| HYDROGRAPH AT | BAS_2 | 475 | 16 00 | 36 | 12 | 11 | 28 | | |
| 2 COMBINED AT | B_1+B_2 | 495 | 16 00 | 98 | 32 | 31 | 1 57 | | |
| HYDROGRAPH AT | BAS_3 | 86 | 16 08 | 9 | 3 | 3 | 19 | | |
| ROUTED TO | RTE_3-4 | 87 | 16 25 | 9 | 3 | 3 | 19 | | |
| HYDROGRAPH AT | BAS_4 | 181 | 16 00 | 13 | 4 | 4 | 18 | | |
| 2 COMBINED AT | B3+B4 | 195 | 16 00 | 22 | 7 | 6 | 37 | | |
| HYDROGRAPH AT | BAS_5 | 146 | 16 08 | 20 | 7 | 6 | 19 | | |
| 2 COMBINED AT | B3+B4+B5 | 284 | 16 00 | 42 | 13 | 13 | 56 | | |
| ROUTED TO | RTE_5-6 | 290 | 16 25 | 42 | 13 | 13 | 56 | | |
| HYDROGRAPH AT | BAS_6 | 81 | 16 00 | 6 | 2 | 2 | 06 | | |
| 2 COMBINED AT | B_5+B_6 | 301 | 16 25 | 48 | 15 | 15 | 62 | | |
| HYDROGRAPH AT | BAS_7 | 329 | 16 17 | 52 | 16 | 16 | 56 | | |
| ROUTED TO | DETAIN | 110 | 16 58 | 50 | 16 | 15 | 56 | 101 00 | 16 58 |
| ROUTED TO | RTE_7-8 | 110 | 16 58 | 50 | 16 | 15 | 56 | | |
| HYDROGRAPH AT | BAS_8 | 90 | 16 00 | 7 | 2 | 2 | 05 | | |
| 2 COMBINED AT | B_7+B_8 | 133 | 16 00 | 57 | 18 | 18 | 61 | | |
| 3 COMBINED AT | B8+B6+B2 | 769 | 16 00 | 202 | 65 | 63 | 2 80 | | |
| HYDROGRAPH AT | BAS_9 | 72 | 16 00 | 6 | 2 | 2 | 04 | | |
| 2 COMBINED AT | B_8+B_9 | 841 | 16 00 | 207 | 67 | 65 | 2 84 | | |
| HYDROGRAPH AT | BAS_10 | 134 | 16 08 | 17 | 6 | 5 | 13 | | |
| 2 COMBINED AT | B9+B10 | 931 | 16 00 | 223 | 73 | 70 | 2 97 | | |

SUMMARY OF KINEMATIC WAVE - MUSKINGUM-CUNGE ROUTING
(FLOW IS DIRECT RUNOFF WITHOUT BASE FLOW)

| ISTAQ | ELEMENT | DT (MIN) | PEAK (CFS) | TIME TO PEAK (MIN) | VOLUME (IN) | INTERPOLATED TO COMPUTATION INTERVAL DT (MIN) | PEAK (CFS) | TIME TO PEAK (MIN) | VOLUME (IN) |
|---|---|---|---|---|---|---|---|---|---|
| RTE_1-2 | MANE | 5 00 | 185 42 | 1020 00 | 57 | 5 00 | 185 42 | 1020 00 | 57 |

CONTINUITY SUMMARY (AC-FT) - INFLOW= 3977E+02 EXCESS= 0000E+00 OUTFLOW= 3922E+02 BASIN STORAGE= 9244E+00 PERCENT ERROR= - 9

| | | | | | | | | | |
|---|---|---|---|---|---|---|---|---|---|
| RTE_3-4 | MANE | 5 00 | 87 46 | 975 00 | 54 | 5 00 | 87 46 | 975 00 | 54 |

CONTINUITY SUMMARY (AC-FT) - INFLOW= 5512E+01 EXCESS= 0000E+00 OUTFLOW= 5517E+01 BASIN STORAGE= 5933E-02 PERCENT ERROR= - 2

| | | | | | | | | | |
|---|---|---|---|---|---|---|---|---|---|
| RTE_5-6 | MANE | 5 00 | 290 06 | 975 00 | 88 | 5 00 | 290 06 | 975 00 | 88 |

CONTINUITY SUMMARY (AC-FT) - INFLOW= 2628E+02 EXCESS= 0000E+00 OUTFLOW= 2626E+02 BASIN STORAGE= 1213E+00 PERCENT ERROR= - 4

| | | | | | | | | | |
|---|---|---|---|---|---|---|---|---|---|
| RTE_7-8 | MANE | 91 | 110 19 | 995 12 | 1 06 | 5 00 | 110 18 | 995 00 | 1 06 |

CONTINUITY SUMMARY (AC-FT) - INFLOW= 3182E+02 EXCESS= 0000E+00 OUTFLOW= 3181E+02 BASIN STORAGE= 1541E-01 PERCENT ERROR= 0

*** NORMAL END OF HEC-1 ***

# APPENDIX E

## 10-Year HEC-1 Analyses for the Pre- and Post-Project Conditions

# 10-Year Storm Event, Pre-Project Condition

```
****************************************
*                                      *
*   FLOOD HYDROGRAPH PACKAGE  (HEC-1)  *
*              JUN   1998              *
*           VERSION 4 1                *
*                                      *
*  RUN DATE   16JAN06  TIME  08 38 55  *
*                                      *
****************************************
```

```
*************************************
*
*    U S  ARMY CORPS OF ENGINEERS
*    HYDROLOGIC ENGINEERING CENTER
*          609 SECOND STREET
*       DAVIS, CALIFORNIA 95616
*           (916) 756-1104
*
*************************************
```

```
X     X  XXXXXXX   XXXXX          X
X     X  X        X     X        XX
X     X  X        X               X
XXXXXXX  XXXX     X        XXXXX  X
X     X  X        X               X
X     X  X        X     X         X
X     X  XXXXXXX   XXXXX         XXX
```

THIS PROGRAM REPLACES ALL PREVIOUS VERSIONS OF HEC-1 KNOWN AS HEC1 (JAN 73), HEC1GS, HEC1DB, AND HEC1KW

THE DEFINITIONS OF VARIABLES -RTIMP- AND -RTIOR- HAVE CHANGED FROM THOSE USED WITH THE 1973-STYLE INPUT STRUCTURE
THE DEFINITION OF -AMSKK- ON RM-CARD WAS CHANGED WITH REVISIONS DATED 28 SEP 81  THIS IS THE FORTRAN77 VERSION
NEW OPTIONS  DAMBREAK OUTFLOW SUBMERGENCE , SINGLE EVENT DAMAGE CALCULATION, DSS WRITE STAGE FREQUENCY,
DSS READ TIME SERIES AT DESIRED CALCULATION INTERVAL  LOSS RATE GREEN AND AMPT INFILTRATION
KINEMATIC WAVE  NEW FINITE DIFFERENCE ALGORITHM

```
          LINE          ID       1       2       3       4       5       6       7       8       9      10

                        *DIAGRAM
             1          ID   HARMONY GROVE HEC-1 FOR 10-YEAR Q                 14312B  01/16/06
             2          ID   PRE-PROJECT CONDITION
             3          ID   THIS MODEL USES EXISTING LAND USES FOR WITHIN PROJECT BOUNDARY HOWEVER USES
             4          ID   ULTIMATE LAND USE FOR THE WATERSHEDS OUTSIDE THE PROJECT BOUNDARY
             5          ID   THE BASIN FACTOR FOR THE THE WATERSHED WAS DETERMINED TO BE 0 05
             6          ID   FN  HG_10 HC1
             7          ID   REMOVED KM CARD BASIN AREA 2 8 SQUARE MILES (NO CHANGE IN Q)
*** FREE ***
             8          IT       5 01JAN90    1200     300
             9          IO       5       1

            10          KK   BAS_1
            11          KM   NESTED STORM PER COUNTY OF SAN DIEGO HYDROLOGY MANUAL
            12          KM   COPYRIGHT 2003 RICK ENGINEERING COMPANY
            13          KM   THE FOLLOWING IT CARD MUST BE USED IN YOUR DATA SET
            14          KM   IT 5 01JAN90 1200 300
            15          KM   6HR RAINFALL IS  2 1  INCHES
            16          KM   24HR RAINFALL IS  3 6  INCHES
            17          KM   DAR30 =   96752
            18          KM   DAR60 =   9832
            19          KM   DAR180 =   9888
            20          KM   DAR360 =   9916
            21          KM   DAR1440 =   9944
            22          IN       5 01JAN90    1200     300
            23          PI   00485   00488   00489   00491   00492   00494   00495   00497   00498    0050
            24          PI   00502   00504   00505   00507   00509   00511   00512   00515   00516    0051
            25          PI   00519   00522   00523   00526   00527    0053   00531   00533   00535   00538
            26          PI   00539   00542   00543   00546   00547    0055   00552   00554   00556   00559
            27          PI    0056   00563   00565   00568    0057   00573   00574   00578   00579   00583
            28          PI   00584   00588   00589   00593   00595   00598     006   00604   00606   00609
            29          PI   00611   00615   00617   00621   00623   00627   00629   00633   00635    0063
            30          PI   00642   00646   00648   00653   00655   00659   00662   00667   00669    0067
            31          PI   00676   00681   00684   00689   00692   00697     007   00705   00708   00714
            32          PI   00716   00722   00725   00731   00734   00741   00744    0075   00753    0076
            33          PI   00763    0077   00774   00781   00785   00792   00796   00804   00808   00816
            34          PI    0082   00828   00832   00841   00845   00855   00859   00869   00873   00883
            35          PI   00888   00899   00904   00915    0092   00932   00938    0095   00956   00968
            36          PI   00975   00988   00995   01009   01016   01031   01038   01054   01062    0107
            37          PI   01087   01105   01114    0105   01059   01078   01088   01109    0112   01142
            38          PI   01154   01178    0119   01217    0123   01259   01274   01306   01322   01357
            39          PI   01375   01414   01435   01478   01501    0155   01576   01657   01686   01749
            40          PI   01783   01857   01897   01985   02033   02139   02198    0233   02404   02574
            41          PI   02671   02898   03032   03614   03797    0427   04585   05282   06016   08833
            42          PI   12446    4461   07085   04981   04012   03184   02778   02485   02262   02084
            43          PI    0194   01819   01717   01603   01525   01456   01394   01339    0129   01244
            44          PI   01203   01165   01131   01098   01069   01124   01096    0107   01046   01023
            45          PI   01002   00981   00962   00944   00926   00909   00894   00878   00864    0085
            46          PI   00837   00824   00812     008   00788   00777   00767   00757   00747   00737
            47          PI   00728   00719   00711   00702   00694   00686   00679   00671   00664    0065
            48          PI    0065   00644   00637   00631   00625   00619   00613   00607   00602   00596
            49          PI   00591   00586   00581   00576   00571   00567   00562   00557   00553    0054
            50          PI   00544    0054   00536   00532   00528   00524   00521   00517   00513    0051
            51          PI   00506   00503   00499   00496   00493    0049   00487       0       0       0
            52          PI       0       0       0       0       0       0       0       0       0       0
```

```
LINE          ID       1       2       3       4       5       6       7       8       9      10

  53          PI       0       0
  54          BA     1 29
  55          LS       0      74
  56          UD     466

  57          KK RTE_1-2
  58          KM   ROUTING BASIN 1 TO BASIN 2
  59          RD    3000    0166      05       0    TRAP      15     4 5

  60          KK   BAS_2
  61          KM   NEXT DOWNSTREAM WATERSHED
  62          BA      28
  63          LS       0      86
  64          UD     146

  65          KK B_1+B_2
  66          HC       2

  67          KK   BAS_3
  68          KM   START NEW UPSTREAM WATERSHED
  69          BA      19
  70          LS       0      74
  71          UD      11

  72          KK RTE_3-4
  73          KM   ROUTING BASIN 3 TO BASIN 4
  74          RD    3500      04      05       0    TRAP      10     2 5

  75          KK   BAS_4
  76          KM   NEXT DOWNSTREAM WATERSHED
  77          BA      18
  78          LS       0      77
  79          UD     161

  80          KK   B3+B4
  81          KM   COMBINING BASIN 3 AND BASIN 4        )
  82          HC       2

  83          KK   BAS_5
  84          KM   START NEW UPSTREAM WATERSHED
  85          BA      19
  86          LS       0      85
  87          UD     164

  88          KKB3+B4+B5
  89          KM   COMBINING THE ALREADY ROUTED 3 INTO 4 TO BASIN 5
  90          HC       2

  91          KK RTE_5-6
  92          KM   ROUTING BASIN 5 TO BASIN 6
  93          RD    2500      04      05       0    TRAP      10     2 5
```

```
LINE          ID       1       2       3       4       5       6       7       8       9      10

  94          KK   BAS_6
  95          KM   NEXT DOWNSTREAM WATERSHED
  96          BA      06
  97          LS       0      80
  98          UD     140

  99          KK B_5+B_6
 100          HC       2

 101          KK   BAS_7
 102          KM   START NEW UPSTREAM WATERSHED
 103          BA      56
 104          LS       0      84
 105          UD     222

 106          KK RTE_7-8
 107          KM   ROUTING BASIN 7 TO BASIN 8
 108          RD    1500     033      05       0    TRAP      10     2 5

 109          KK   BAS_8
 110          KM   NEXT DOWNSTREAM WATERSHED
 111          BA      05
 112          LS       0      85
 113          UD     085

 114          KK B_7+B_8
 115          HC       2

 116          KKB8+B6+B2
 117          KM   COMBINE 8,6,2
 118          HC       3

 119          KK   BAS_9
 120          KM   MOST DOWNSTREAM WATERSHED
 121          BA      04
 122          LS       0      91
 123          UD     091

 124          KK B_8+B_9
 125          KM   CONFLUENCE ALL STREAMS AT BOTTOM
 126          HC       2

 127          KK  BAS_10
 128          KM   NEXT DOWNSTREAM WATERSHED
 129          BA      13
 130          LS       0      84
 131          UD     151

 132          KK  B9+B10
 133          KM   COMBINING BASIN 9 AND BASIN 10
 134          HC       2
 135          ZZ
```

SCHEMATIC DIAGRAM OF STREAM NETWORK

```
INPUT
 LINE      (V) ROUTING          (--->) DIVERSION OR PUMP FLOW

  NO       ( ) CONNECTOR        (<---) RETURN OF DIVERTED OR PUMPED FLOW

   10       BAS_1
                V
                V
   57     RTE_1-2


   60                   BAS_2


   65     B_1+B_2


   67                   BAS_3
                            V
                            V
   72                 RTE_3-4


   75                               BAS_4


   80                   B3+B4


   83                               BAS_5


   88                B3+B4+B5
                            V
                            V
   91                 RTE_5-6


   94                               BAS_6


   99                 B_5+B_6


  101                               BAS_7
                                        V
                                        V
  106                             RTE_7-8


  109                                           BAS_8


  114                             B_7+B_8


  116    B8+B6+B2
```

119 BAS_9

124 B_8+B_9

127 BAS_10

132 B9+B10

(***) RUNOFF ALSO COMPUTED AT THIS LOCATION

```
****************************************                                                  ****************************************
*                                      *                                                  *
*   FLOOD HYDROGRAPH PACKAGE  (HEC-1)  *                                                  *    U S  ARMY CORPS OF ENGINEERS
*              JUN   1998              *                                                  *    HYDROLOGIC ENGINEERING CENTER
*           VERSION 4 1                *                                                  *          609 SECOND STREET
*                                      *                                                  *       DAVIS, CALIFORNIA 95616
*  RUN DATE   16JAN06  TIME  08 38 55  *                                                  *           (916) 756-1104
*                                      *                                                  *
****************************************                                                  ****************************************
```

```
                    HARMONY GROVE HEC-1 FOR 10-YEAR Q                 14312B  01/16/06
                    PRE-PROJECT CONDITION
                    THIS MODEL USES EXISTING LAND USES FOR WITHIN PROJECT BOUNDARY HOWEVER USES
                    ULTIMATE LAND USE FOR THE WATERSHEDS OUTSIDE THE PROJECT BOUNDARY
                    THE BASIN FACTOR FOR THE THE WATERSHED WAS DETERMINED TO BE 0 05
                    FN  HG_10 HC1
                    REMOVED KM CARD BASIN AREA 2 8 SQUARE MILES (NO CHANGE IN Q)

  9 IO        OUTPUT CONTROL VARIABLES
                  IPRNT          5  PRINT CONTROL
                  IPLOT          1  PLOT CONTROL
                  QSCAL          0  HYDROGRAPH PLOT SCALE

   IT         HYDROGRAPH TIME DATA
                   NMIN          5  MINUTES IN COMPUTATION INTERVAL
                  IDATE     1JAN90  STARTING DATE
                  ITIME       1200  STARTING TIME
                     NQ        300  NUMBER OF HYDROGRAPH ORDINATES
                 NDDATE     2JAN90  ENDING DATE
                 NDTIME       1255  ENDING TIME
                 ICENT          19  CENTURY MARK

              COMPUTATION INTERVAL      08 HOURS
                   TOTAL TIME BASE   24 92 HOURS

        ENGLISH UNITS
             DRAINAGE AREA          SQUARE MILES
             PRECIPITATION DEPTH    INCHES
             LENGTH, ELEVATION      FEET
             FLOW                   CUBIC FEET PER SECOND
             STORAGE VOLUME         ACRE-FEET
             SURFACE AREA           ACRES
             TEMPERATURE            DEGREES FAHRENHEIT
```

RUNOFF SUMMARY
FLOW IN CUBIC FEET PER SECOND
TIME IN HOURS, AREA IN SQUARE MILES

| OPERATION | STATION | PEAK FLOW | TIME OF PEAK | AVERAGE FLOW FOR MAXIMUM PERIOD 6-HOUR | 24-HOUR | 72-HOUR | BASIN AREA | MAXIMUM STAGE | TIME OF MAX STAGE |
|---|---|---|---|---|---|---|---|---|---|
| HYDROGRAPH AT | BAS_1 | 567 | 16 42 | 140 | 45 | 43 | 1 29 | | |
| ROUTED TO | RTE_1-2 | 568 | 16 50 | 140 | 45 | 43 | 1 29 | | |
| HYDROGRAPH AT | BAS_2 | 359 | 16 08 | 47 | 16 | 16 | 28 | | |
| 2 COMBINED AT | B_1+B_2 | 641 | 16 50 | 186 | 61 | 59 | 1 57 | | |
| HYDROGRAPH AT | BAS_3 | 184 | 16 08 | 21 | 7 | 6 | 19 | | |
| ROUTED TO | RTE_3-4 | 169 | 16 17 | 21 | 7 | 6 | 19 | | |
| HYDROGRAPH AT | BAS_4 | 160 | 16 08 | 22 | 7 | 7 | 18 | | |
| 2 COMBINED AT | B3+B4 | 321 | 16 17 | 43 | 14 | 13 | 37 | | |
| HYDROGRAPH AT | BAS_5 | 218 | 16 08 | 31 | 11 | 10 | 19 | | |
| 2 COMBINED AT | B3+B4+B5 | 530 | 16 17 | 74 | 24 | 24 | 56 | | |
| ROUTED TO | RTE_5-6 | 485 | 16 17 | 74 | 24 | 24 | 56 | | |
| HYDROGRAPH AT | BAS_6 | 65 | 16 08 | 8 | 3 | 3 | 06 | | |
| 2 COMBINED AT | B_5+B_6 | 541 | 16 17 | 82 | 27 | 26 | 62 | | |
| HYDROGRAPH AT | BAS_7 | 544 | 16 17 | 89 | 30 | 29 | 56 | | |
| ROUTED TO | RTE_7-8 | 518 | 16 25 | 89 | 30 | 29 | 56 | | |
| HYDROGRAPH AT | BAS_8 | 71 | 16 08 | 8 | 3 | 3 | 05 | | |
| 2 COMBINED AT | B_7+B_8 | 546 | 16 17 | 97 | 33 | 32 | 61 | | |
| 3 COMBINED AT | B8+B6+B2 | 1638 | 16 17 | 364 | 121 | 117 | 2 80 | | |
| HYDROGRAPH AT | BAS_9 | 66 | 16 08 | 8 | 3 | 3 | 04 | | |
| 2 COMBINED AT | B_8+B_9 | 1674 | 16 17 | 372 | 124 | 119 | 2 84 | | |
| HYDROGRAPH AT | BAS_10 | 154 | 16 08 | 21 | 7 | 7 | 13 | | |
| 2 COMBINED AT | B9+B10 | 1812 | 16 17 | 392 | 131 | 126 | 2 97 | | |

SUMMARY OF KINEMATIC WAVE - MUSKINGUM-CUNGE ROUTING
(FLOW IS DIRECT RUNOFF WITHOUT BASE FLOW)

| ISTAQ | ELEMENT | DT (MIN) | PEAK (CFS) | TIME TO PEAK (MIN) | VOLUME (IN) | INTERPOLATED TO COMPUTATION INTERVAL DT (MIN) | PEAK (CFS) | TIME TO PEAK (MIN) | VOLUME (IN) |
|---|---|---|---|---|---|---|---|---|---|
| RTE_1-2 | MANE | 5 00 | 568 14 | 990 00 | 1 29 | 5 00 | 568 14 | 990 00 | 1 29 |

CONTINUITY SUMMARY (AC-FT) - INFLOW= 8877E+02 EXCESS= 0000E+00 OUTFLOW= 8863E+02 BASIN STORAGE= 3110E+00 PERCENT ERROR= - 2

| | | | | | | | | | |
|---|---|---|---|---|---|---|---|---|---|
| RTE_3-4 | MANE | 5 00 | 168 85 | 970 00 | 1 29 | 5 00 | 168 85 | 970 00 | 1 29 |

CONTINUITY SUMMARY (AC-FT) - INFLOW= 1309E+02 EXCESS= 0000E+00 OUTFLOW= 1309E+02 BASIN STORAGE= 6378E-02 PERCENT ERROR= - 1

| | | | | | | | | | |
|---|---|---|---|---|---|---|---|---|---|
| RTE_5-6 | MANE | 3 84 | 524 25 | 972 68 | 1 62 | 5 00 | 485 34 | 970 00 | 1 62 |

CONTINUITY SUMMARY (AC-FT) - INFLOW= 4847E+02 EXCESS= 0000E+00 OUTFLOW= 4847E+02 BASIN STORAGE= 1226E-01 PERCENT ERROR= 0

| | | | | | | | | | |
|---|---|---|---|---|---|---|---|---|---|
| RTE_7-8 | MANE | 2 45 | 530 77 | 971 93 | 2 00 | 5 00 | 517 64 | 975 00 | 2 00 |

CONTINUITY SUMMARY (AC-FT) - INFLOW= 5974E+02 EXCESS= 0000E+00 OUTFLOW= 5974E+02 BASIN STORAGE= 7813E-02 PERCENT ERROR= 0

*** NORMAL END OF HEC-1 ***

E

# 10-Year Storm Event, Post-Project Condition

```
****************************************
*                                      *
*   FLOOD HYDROGRAPH PACKAGE  (HEC-1)  *
*              JUN   1998              *
*           VERSION 4 1                *
*                                      *
*  RUN DATE   16JAN06  TIME  08 45 26  *
*                                      *
****************************************
```

```
*************************************
*                                   *
*    U S  ARMY CORPS OF ENGINEERS   *
*    HYDROLOGIC ENGINEERING CENTER  *
*          609 SECOND STREET        *
*       DAVIS, CALIFORNIA 95616     *
*           (916) 756-1104          *
*                                   *
*************************************
```

```
X     X  XXXXXXX   XXXXX           X
X     X  X        X     X         XX
X     X  X        X                X
XXXXXXX  XXXX     X        XXXXX   X
X     X  X        X                X
X     X  X        X     X          X
X     X  XXXXXXX   XXXXX          XXX
```

THIS PROGRAM REPLACES ALL PREVIOUS VERSIONS OF HEC-1 KNOWN AS HEC1 (JAN 73), HEC1GS, HEC1DB, AND HEC1KW

THE DEFINITIONS OF VARIABLES -RTIMP- AND -RTIOR- HAVE CHANGED FROM THOSE USED WITH THE 1973-STYLE INPUT STRUCTURE
THE DEFINITION OF -AMSKK- ON RM-CARD WAS CHANGED WITH REVISIONS DATED 28 SEP 81  THIS IS THE FORTRAN77 VERSION
NEW OPTIONS  DAMBREAK OUTFLOW SUBMERGENCE , SINGLE EVENT DAMAGE CALCULATION, DSS WRITE STAGE FREQUENCY,
DSS READ TIME SERIES AT DESIRED CALCULATION INTERVAL  LOSS RATE GREEN AND AMPT INFILTRATION
KINEMATIC WAVE  NEW FINITE DIFFERENCE ALGORITHM

```
          LINE          ID      1       2       3       4       5       6       7       8       9      10

                        *DIAGRAM
            1           ID   HARMONY GROVE HEC-1 FOR 10-YEAR Q                  14312B  01/16/06
            2           ID   POST-PROJECT CONDITION INCLUDING NEW DEVELOPMENT IN EAST VILLAGE
            3           ID   THIS MODEL USES PROPOSED LAND USES FOR WITHING PROJECT BOUNDARY HOWEVER
            4           ID   USES ULTIMATE LAND USE FOR THE WATERSHEDS OUTSIDE THE PROJECT BOUNDARY
            5           ID   OUTSIDE THE PROJECT BOUNDRAY, THE BASIN FACTOR IS THE SAME FOR PRE AND POST
            6           ID   BASIN FACTOR INSIDE THE BOUNDARY IS 0 018
            7           ID   NEW RD CARD FOR BASIN 6
            8           ID   REMOVED KM CARD BASIN AREA 2 8 SQUARE MILES (NO CHANGE IN Q)
            9           ID   FN  HG_10P HC1
*** FREE ***
           10           IT       5 01JAN90    1200     300
           11           IO       5       1

           12           KK   BAS_1
           13           KM   NESTED STORM PER COUNTY OF SAN DIEGO HYDROLOGY MANUAL
           14           KM   COPYRIGHT 2003 RICK ENGINEERING COMPANY
           15           KM   THE FOLLOWING IT CARD MUST BE USED IN YOUR DATA SET
           16           KM   IT 5 01JAN90 1200 300
           17           KM   6HR RAINFALL IS  2 1  INCHES
           18           KM   24HR RAINFALL IS  3 6  INCHES
           19           KM   DAR30 =   96752
           20           KM   DAR60 =   9832
           21           KM   DAR180 =   9888
           22           KM   DAR360 =   9916
           23           KM   DAR1440 =   9944
           24           IN       5 01JAN90    1200     300
           25           PI   00485   00488   00489   00491   00492   00494   00495   00497   00498    0050
           26           PI   00502   00504   00505   00507   00509   00511   00512   00515   00516    0051
           27           PI   00519   00522   00523   00526   00527    0053   00531   00533   00535   00538
           28           PI   00539   00542   00543   00546   00547    0055   00552   00554   00556   00559
           29           PI    0056   00563   00565   00568    0057   00573   00574   00578   00579   00583
           30           PI   00584   00588   00589   00593   00595   00598     006   00604   00606   00609
           31           PI   00611   00615   00617   00621   00623   00627   00629   00633   00635    0063
           32           PI   00642   00646   00648   00653   00655   00659   00662   00667   00669    0067
           33           PI   00676   00681   00684   00689   00692   00697     007   00705   00708   00714
           34           PI   00716   00722   00725   00731   00734   00741   00744    0075   00753    0076
           35           PI   00763    0077   00774   00781   00785   00792   00796   00804   00808   00816
           36           PI    0082   00828   00832   00841   00845   00855   00859   00869   00873   00883
           37           PI   00888   00899   00904   00915    0092   00932   00938    0095   00956   00968
           38           PI   00975   00988   00995   01009   01016   01031   01038   01054   01062    0107
           39           PI   01087   01105   01114    0105   01059   01078   01088   01109    0112   01142
           40           PI   01154   01178    0119   01217    0123   01259   01274   01306   01322   01357
           41           PI   01375   01414   01435   01478   01501    0155   01576   01657   01686   01749
           42           PI   01783   01857   01897   01985   02033   02139   02198    0233   02404   02574
           43           PI   02671   02898   03032   03614   03797    0427   04585   05282   06016   08833
           44           PI   12446    4461   07085   04981   04012   03184   02778   02485   02262   02084
           45           PI    0194   01819   01717   01603   01525   01456   01394   01339    0129   01244
           46           PI   01203   01165   01131   01098   01069   01124   01096    0107   01046   01023
           47           PI   01002   00981   00962   00944   00926   00909   00894   00878   00864    0085
           48           PI   00837   00824   00812     008   00788   00777   00767   00757   00747   00737
           49           PI   00728   00719   00711   00702   00694   00686   00679   00671   00664    0065
           50           PI    0065   00644   00637   00631   00625   00619   00613   00607   00602   00596
           51           PI   00591   00586   00581   00576   00571   00567   00562   00557   00553    0054
           52           PI   00544    0054   00536   00532   00528   00524   00521   00517   00513    0051
```

```
LINE          ID       1       2       3       4       5       6       7       8       9      10

  53          PI   00506   00503   00499   00496   00493    0049   00487       0       0       0
  54          PI       0       0       0       0       0       0       0       0       0       0
  55          PI       0       0
  56          BA    1 29
  57          LS       0      75
  58          UD     466

  59          KK  DETAIN
  60          RS       1    STOR      -1
  61          SV       0     8 0    8 06
  62          SQ       0     185     585
  63          SE     100     101     102

  64          KK RTE_1-2
  65          KM   ROUTING BASIN 1 TO BASIN 2
  66          KM   MANNINGS N VALUE FROM COUNTY OF SAN DIEGO 1993
  67          KM   1 PERCENT SLOPE
  68          RD    2500      01     075       0    TRAP      70       2

  69          KK   BAS_2
  70          KM   NEXT DOWNSTREAM WATERSHED
  71          BA      28
  72          LS       0      92
  73          UD     026

  74          KK B_1+B_2
  75          HC       2

  76          KK   BAS_3
  77          KM   START NEW UPSTREAM WATERSHED
  78          BA      19
  79          LS       0      74
  80          UD      11

  81          KK RTE_3-4
  82          KM   ROUTING BASIN 3 TO BASIN 4
  83          KM   MOSTLY NATRUAL CHANEL
  84          KM   SLOPE (810-670)/3500
  85          KM   FOR MANNING  05 SAME AS PRE UNLESS WERE HAVEING HABITAT MITIGATION  075
  86          RD    3500      04      05       0    TRAP      10     2 5

  87          KK   BAS_4
  88          KM   NEXT DOWNSTREAM WATERSHED
  89          BA      18
  90          LS       0      80
  91          UD     031

  92          KK   B3+B4
  93          KM   COMBINING BASIN 3 AND 4
  94          HC       2
```

```
LINE          ID      1       2       3       4       5       6       7       8       9      10

   95         KK   BAS_5
   96         KM   START NEW UPSTREAM WATERSHED
   97         BA      19
   98         LS       0      88
   99         UD     164

  100         KKB3+B4+B5
  101         KM   COMBINING THE ALREADY ROUTED 3INTO 4 TO BASIN 5
  102         HC       2

  103         KK RTE_5-6
  104         KM   ROUTING BASIN 5 TO BASIN 6
  105         KM   AROUND 2500
  106         KM   MANNING N AVERAGE  075
  107         KM   BOTTOM WIDTH 50 FT
  108         KM   AVERAGE Z IS 2
  109         RD    2500      01     075       0    TRAP      50       2

  110         KK   BAS_6
  111         KM   NEXT DOWNSTREAM WATERSHED
  112         BA      06
  113         LS       0      86
  114         UD     024

  115         KK B_5+B_6
  116         HC       2

  117         KK   BAS_7
  118         KM   START NEW UPSTREAM WATERSHED
  119         BA      56
  120         LS       0      85
  121         UD     222

  122         KK  DETAIN
  123         RS       1    STOR      -1
  124         SV       0    11 0   11 75
  125         SQ       0     110     560
  126         SE     100     101     102

  127         KK RTE_7-8
  128         KM   ROUTING BASIN 7 TO BASIN 8
  129         KM   1500 FOR LENGTH
  130         KM   SLOPE
  131         KM   108 IN DIAMETER PIPE
  132         KM   NO Z VALUE SIDE SLOPE
  133         RD    1500     033     012       0    CIRC       9

  134         KK   BAS_8
  135         KM   NEXT DOWNSTREAM WATERSHED
  136         BA      05
  137         LS       0      94
  138         UD     004
```

```
LINE          ID       1       2       3       4       5       6       7       8       9      10

 139          KK B_7+B_8
 140          HC       2

 141          KKB8+B6+B2
 142          KM   COMBINE 8,6,2
 143          HC       3

 144          KK   BAS_9
 145          KM   MOST DOWNSTREAM WATERSHED
 146          BA      04
 147          LS       0      94
 148          UD     006

 149          KK B_8+B_9
 150          KM   CONFLUENCE ALL STREAMS AT BOTTOM
 151          HC       2

 152          KK  BAS_10
 153          KM   NEXT DOWNSTREAM WATERSHED
 154          BA      13
 155          LS       0      92
 156          UD     132

 157          KK  B9+B10
 158          KM   COMBINING BASIN 9 AND BASIN 10
 159          HC       2
 160          ZZ
```

```
                SCHEMATIC DIAGRAM OF STREAM NETWORK
INPUT
 LINE      (V) ROUTING          (--->) DIVERSION OR PUMP FLOW

 NO        ( ) CONNECTOR        (<---) RETURN OF DIVERTED OR PUMPED FLOW

  12        BAS_1
                V
                V
  59       DETAIN
                V
                V
  64      RTE_1-2


  69                   BAS_2


  74      B_1+B_2


  76                   BAS_3
                           V
                           V
  81                 RTE_3-4


  87                               BAS_4


  92                   B3+B4


  95                               BAS_5


 100                 B3+B4+B5
                           V
                           V
 103                 RTE_5-6


 110                               BAS_6


 115                 B_5+B_6


 117                               BAS_7
                                       V
                                       V
 122                              DETAIN
                                       V
                                       V
 127                            RTE_7-8


 134                                         BAS_8
```

139 B_7+B_8

141 B8+B6+B2

144 BAS_9

149 B_8+B_9

152 BAS_10

157 B9+B10

(***) RUNOFF ALSO COMPUTED AT THIS LOCATION

```
****************************************                                    ****************************************
*                                      *                                    *
*   FLOOD HYDROGRAPH PACKAGE  (HEC-1)  *                                    *    U S  ARMY CORPS OF ENGINEERS
*              JUN   1998              *                                    *    HYDROLOGIC ENGINEERING CENTER
*           VERSION 4 1                *                                    *          609 SECOND STREET
*                                      *                                    *       DAVIS, CALIFORNIA 95616
*  RUN DATE   16JAN06  TIME  08 45 26  *                                    *           (916) 756-1104
*                                      *                                    *
****************************************                                    ****************************************
```

```
                    HARMONY GROVE HEC-1 FOR 10-YEAR Q                14312B  01/16/06
                    POST-PROJECT CONDITION INCLUDING NEW DEVELOPMENT IN EAST VILLAGE
                    THIS MODEL USES PROPOSED LAND USES FOR WITHING PROJECT BOUNDARY HOWEVER
                    USES ULTIMATE LAND USE FOR THE WATERSHEDS OUTSIDE THE PROJECT BOUNDARY
                    OUTSIDE THE PROJECT BOUNDRAY, THE BASIN FACTOR IS THE SAME FOR PRE AND POST
                    BASIN FACTOR INSIDE THE BOUNDARY IS 0 018
                    NEW RD CARD FOR BASIN 6
                    REMOVED KM CARD BASIN AREA 2 8 SQUARE MILES (NO CHANGE IN Q)
                    FN  HG_10P HC1

 11 IO        OUTPUT CONTROL VARIABLES
                  IPRNT          5  PRINT CONTROL
                  IPLOT          1  PLOT CONTROL
                  QSCAL          0  HYDROGRAPH PLOT SCALE

    IT        HYDROGRAPH TIME DATA
                   NMIN          5  MINUTES IN COMPUTATION INTERVAL
                  IDATE     1JAN90  STARTING DATE
                  ITIME       1200  STARTING TIME
                     NQ        300  NUMBER OF HYDROGRAPH ORDINATES
                 NDDATE     2JAN90  ENDING DATE
                 NDTIME       1255  ENDING TIME
                 ICENT          19  CENTURY MARK

              COMPUTATION INTERVAL      08 HOURS
                   TOTAL TIME BASE   24 92 HOURS

        ENGLISH UNITS
             DRAINAGE AREA          SQUARE MILES
             PRECIPITATION DEPTH    INCHES
             LENGTH, ELEVATION      FEET
             FLOW                   CUBIC FEET PER SECOND
             STORAGE VOLUME         ACRE-FEET
             SURFACE AREA           ACRES
             TEMPERATURE            DEGREES FAHRENHEIT

WARNING --- ROUTED OUTFLOW (    586 ) IS GREATER THAN MAXIMUM OUTFLOW (    585 ) IN STORAGE-OUTFLOW TABLE
```

RUNOFF SUMMARY
FLOW IN CUBIC FEET PER SECOND
TIME IN HOURS, AREA IN SQUARE MILES

| OPERATION | STATION | PEAK FLOW | TIME OF PEAK | AVERAGE FLOW FOR MAXIMUM PERIOD 6-HOUR | 24-HOUR | 72-HOUR | BASIN AREA | MAXIMUM STAGE | TIME OF MAX STAGE |
|---|---|---|---|---|---|---|---|---|---|
| HYDROGRAPH AT | BAS_1 | 592 | 16 42 | 146 | 47 | 45 | 1 29 | | |
| ROUTED TO | DETAIN | 586 | 16 42 | 146 | 47 | 45 | 1 29 | 102 00 | 16 42 |
| ROUTED TO | RTE_1-2 | 648 | 16 50 | 146 | 46 | 44 | 1 29 | | |
| HYDROGRAPH AT | BAS_2 | 718 | 16 00 | 56 | 20 | 20 | 28 | | |
| 2 COMBINED AT | B_1+B_2 | 802 | 16 00 | 196 | 67 | 64 | 1 57 | | |
| HYDROGRAPH AT | BAS_3 | 184 | 16 08 | 21 | 7 | 6 | 19 | | |
| ROUTED TO | RTE_3-4 | 169 | 16 17 | 21 | 7 | 6 | 19 | | |
| HYDROGRAPH AT | BAS_4 | 335 | 16 00 | 25 | 8 | 8 | 18 | | |
| 2 COMBINED AT | B3+B4 | 380 | 16 00 | 45 | 15 | 14 | 37 | | |
| HYDROGRAPH AT | BAS_5 | 237 | 16 08 | 34 | 12 | 11 | 19 | | |
| 2 COMBINED AT | B3+B4+B5 | 526 | 16 00 | 79 | 27 | 26 | 56 | | |
| ROUTED TO | RTE_5-6 | 528 | 16 25 | 79 | 27 | 26 | 56 | | |
| HYDROGRAPH AT | BAS_6 | 134 | 16 00 | 10 | 3 | 3 | 06 | | |
| 2 COMBINED AT | B_5+B_6 | 546 | 16 25 | 89 | 30 | 29 | 62 | | |
| HYDROGRAPH AT | BAS_7 | 560 | 16 17 | 92 | 31 | 30 | 56 | | |
| ROUTED TO | DETAIN | 560 | 16 17 | 89 | 31 | 30 | 56 | 102 00 | 16 17 |
| ROUTED TO | RTE_7-8 | 529 | 16 25 | 89 | 31 | 30 | 56 | | |
| HYDROGRAPH AT | BAS_8 | 133 | 16 00 | 10 | 4 | 4 | 05 | | |
| 2 COMBINED AT | B_7+B_8 | 546 | 16 25 | 99 | 35 | 33 | 61 | | |
| 3 COMBINED AT | B8+B6+B2 | 1307 | 16 25 | 384 | 131 | 127 | 2 80 | | |
| HYDROGRAPH AT | BAS_9 | 106 | 16 00 | 8 | 3 | 3 | 04 | | |
| 2 COMBINED AT | B_8+B_9 | 1405 | 16 00 | 392 | 135 | 130 | 2 84 | | |
| HYDROGRAPH AT | BAS_10 | 203 | 16 08 | 26 | 9 | 9 | 13 | | |
| 2 COMBINED AT | B9+B10 | 1543 | 16 00 | 417 | 144 | 139 | 2 97 | | |

SUMMARY OF KINEMATIC WAVE - MUSKINGUM-CUNGE ROUTING
(FLOW IS DIRECT RUNOFF WITHOUT BASE FLOW)

| ISTAQ | ELEMENT | DT (MIN) | PEAK (CFS) | TIME TO PEAK (MIN) | VOLUME (IN) | INTERPOLATED TO COMPUTATION INTERVAL DT (MIN) | PEAK (CFS) | TIME TO PEAK (MIN) | VOLUME (IN) |
|---|---|---|---|---|---|---|---|---|---|
| RTE_1-2 | MANE | 5 00 | 648 10 | 990 00 | 1 33 | 5 00 | 648 10 | 990 00 | 1 33 |

CONTINUITY SUMMARY (AC-FT) - INFLOW= 9238E+02 EXCESS= 0000E+00 OUTFLOW= 9164E+02 BASIN STORAGE= 1425E+01 PERCENT ERROR= - 7

| | | | | | | | | | |
|---|---|---|---|---|---|---|---|---|---|
| RTE_3-4 | MANE | 5 00 | 168 85 | 970 00 | 1 29 | 5 00 | 168 85 | 970 00 | 1 29 |

CONTINUITY SUMMARY (AC-FT) - INFLOW= 1309E+02 EXCESS= 0000E+00 OUTFLOW= 1309E+02 BASIN STORAGE= 6378E-02 PERCENT ERROR= - 1

| | | | | | | | | | |
|---|---|---|---|---|---|---|---|---|---|
| RTE_5-6 | MANE | 5 00 | 527 91 | 975 00 | 1 78 | 5 00 | 527 91 | 975 00 | 1 78 |

CONTINUITY SUMMARY (AC-FT) - INFLOW= 5305E+02 EXCESS= 0000E+00 OUTFLOW= 5303E+02 BASIN STORAGE= 1155E+00 PERCENT ERROR= - 2

| | | | | | | | | | |
|---|---|---|---|---|---|---|---|---|---|
| RTE_7-8 | MANE | 65 | 562 63 | 971 20 | 2 04 | 5 00 | 529 08 | 975 00 | 2 04 |

CONTINUITY SUMMARY (AC-FT) - INFLOW= 6098E+02 EXCESS= 0000E+00 OUTFLOW= 6096E+02 BASIN STORAGE= 2549E-01 PERCENT ERROR= 0

*** NORMAL END OF HEC-1 ***

# APPENDIX F

## 100-Year HEC-1 Analyses for the Pre- and Post-Project Conditions

# 100-Year Storm Event, Pre-Project Condition

```
****************************************
*                                      *
*   FLOOD HYDROGRAPH PACKAGE  (HEC-1)  *
*              JUN   1998              *
*           VERSION 4 1                *
*                                      *
*  RUN DATE   16JAN06  TIME  08 49 21  *
*                                      *
****************************************
```

```
*************************************
*                                   *
*   U S  ARMY CORPS OF ENGINEERS    *
*   HYDROLOGIC ENGINEERING CENTER   *
*         609 SECOND STREET         *
*      DAVIS, CALIFORNIA 95616      *
*          (916) 756-1104           *
*                                   *
*************************************
```

```
X     X  XXXXXXX   XXXXX          X
X     X  X        X     X        XX
X     X  X        X               X
XXXXXXX  XXXX     X        XXXXX  X
X     X  X        X               X
X     X  X        X     X         X
X     X  XXXXXXX   XXXXX         XXX
```

THIS PROGRAM REPLACES ALL PREVIOUS VERSIONS OF HEC-1 KNOWN AS HEC1 (JAN 73), HEC1GS, HEC1DB, AND HEC1KW

THE DEFINITIONS OF VARIABLES -RTIMP- AND -RTIOR- HAVE CHANGED FROM THOSE USED WITH THE 1973-STYLE INPUT STRUCTURE
THE DEFINITION OF -AMSKK- ON RM-CARD WAS CHANGED WITH REVISIONS DATED 28 SEP 81  THIS IS THE FORTRAN77 VERSION
NEW OPTIONS  DAMBREAK OUTFLOW SUBMERGENCE , SINGLE EVENT DAMAGE CALCULATION, DSS WRITE STAGE FREQUENCY,
DSS READ TIME SERIES AT DESIRED CALCULATION INTERVAL  LOSS RATE GREEN AND AMPT INFILTRATION
KINEMATIC WAVE  NEW FINITE DIFFERENCE ALGORITHM

```
          LINE          ID       1       2       3       4       5       6       7       8       9      10

                        *DIAGRAM
             1          ID   HARMONY GROVE HEC-1 FOR 100-YEAR Q                  14312B  01/16/06
             2          ID   PRE-PROJECT CONDITION
             3          ID   THIS MODEL USES EXISTING LAND USES FOR WITHIN PROJECT BOUNDARY HOWEVER USES
             4          ID   ULTIMATE LAND USE FOR THE WATERSHEDS OUTSIDE THE PROJECT BOUNDARY
             5          ID   THE BASIN FACTOR FOR THE THE WATERSHED WAS DETERMINED TO BE 0 05
             6          ID   NEW BASIN 10 ADDED
             7          ID   REMOVED KM CARD BASIN AREA 2 8 SQUARE MILES (NO CHANGE IN Q)
             8          ID   FN  HGV100E4 HC1
*** FREE ***
             9          IT       5 01JAN90    1200     300
            10          IO       5       1

            11          KK   BAS_1
            12          KM   NESTED STORM PER COUNTY OF SAN DIEGO HYDROLOGY MANUAL
            13          KM   COPYRIGHT 2003 RICK ENGINEERING COMPANY
            14          KM   THE FOLLOWING IT CARD MUST BE USED IN YOUR DATA SET
            15          KM   IT 5 01JAN90 1200 300
            16          KM   6HR RAINFALL IS  3 3  INCHES
            17          KM   24HR RAINFALL IS  5 7  INCHES
            18          KM   DAR30 =   96752
            19          KM   DAR60 =   9832
            20          KM   DAR180 =   9888
            21          KM   DAR360 =   9916
            22          KM   DAR1440 =   9944
            23          IN       5 01JAN90    1200     300
            24          PI   00779   00783   00784   00788   00789   00793   00795   00798     008   00803
            25          PI   00805   00809   00811   00814   00816    0082   00822   00826   00828   00831
            26          PI   00833   00837   00839   00843   00845   00849   00852   00856   00858    0086
            27          PI   00864   00869   00871   00875   00878   00882   00884   00889   00891    0089
            28          PI   00899   00903   00906   00911   00913   00918   00921   00926   00929    0093
            29          PI   00937   00942   00945    0095   00953   00959   00962   00967    0097   00976
            30          PI   00979   00985   00988   00995   00998   01004   01007   01014   01017    0102
            31          PI   01027   01034   01038   01045   01049   01056    0106   01067   01071   01079
            32          PI   01082    0109   01094   01103   01107   01115    0112   01128   01133   01142
            33          PI   01146   01155    0116    0117   01174   01184   01189     012   01205   01215
            34          PI   01221   01232   01237   01249   01254   01266   01272   01284   01291    0130
            35          PI    0131   01323    0133   01344   01351   01365   01372   01387   01395   01411
            36          PI   01419   01435   01443   01461   01469   01487   01497   01515   01525    0154
            37          PI   01555   01576   01587   01609    0162   01644   01656   01681   01693    0172
            38          PI   01733   01761   01776    0165   01664   01694    0171   01743   01759   01794
            39          PI   01813   01851    0187   01912   01933   01978   02002   02052   02078   02132
            40          PI   02161   02222   02254   02322   02359   02435   02476   02604    0265   02749
            41          PI   02803   02919   02982   03119   03195   03362   03454   03662   03778    0404
            42          PI   04197   04554   04765   05679   05966   06709   07205     083   09453   13881
            43          PI   19557   70102   11133   07827   06304   05003   04366   03905   03554    0327
            44          PI   03048   02859   02698   02519   02396   02288   02191   02105   02026    0195
            45          PI   01891   01831   01777   01726   01679    0179   01747   01706   01668   01632
            46          PI   01598   01566   01535   01506   01478   01452   01427   01403    0138   01358
            47          PI   01337   01316   01297   01278    0126   01243   01226    0121   01194   01179
            48          PI   01165   01151   01137   01124   01111   01099   01086   01075   01063    0105
            49          PI   01041   01031   01021   01011   01001   00991   00982   00973      00
            50          BA    1 29
            51          LS       0      81
            52          UD     466
```

```
LINE          ID       1       2       3       4       5       6       7       8       9      10

  53          KK RTE_1-2
  54          KM   ROUTING BASIN 1 TO BASIN 2
  55          RD    3000    0166      05       0    TRAP      15     4 5

  56          KK   BAS_2
  57          KM   NEXT DOWNSTREAM WATERSHED
  58          BA      28
  59          LS       0      90
  60          UD     146

  61          KK B_1+B_2
  62          HC       2

  63          KK   BAS_3
  64          KM   START NEW UPSTREAM WATERSHED
  65          BA      19
  66          LS       0      81
  67          UD      11

  68          KK RTE_3-4
  69          KM   ROUTING BASIN 3 TO BASIN 4
  70          RD    3500      04      05       0    TRAP      10     2 5

  71          KK   BAS_4
  72          KM   NEXT DOWNSTREAM WATERSHED
  73          BA      18
  74          LS       0      84
  75          UD     161

  76          KK   B3+B4
  77          KM   COMBINING BASIN 3 AND BASIN 4
  78          HC       2

  79          KK   BAS_5
  80          KM   START NEW UPSTREAM WATERSHED
  81          BA      19
  82          LS       0      89
  83          UD     164

  84          KKB3+B4+B5
  85          KM   COMBINING THE ALREADY ROUTED 3 INTO 4 TO BASIN 5
  86          HC       2

  87          KK RTE_5-6
  88          KM   ROUTING BASIN 5 TO BASIN 6
  89          RD    2500      04      05       0    TRAP      10     2 5

  90          KK   BAS_6
  91          KM   NEXT DOWNSTREAM WATERSHED
  92          BA      06
  93          LS       0      86
  94          UD     140
```

```
LINE      ID      1       2       3       4       5       6       7       8       9      10

  95      KK B_5+B_6
  96      HC       2

  97      KK   BAS_7
  98      KM   START NEW UPSTREAM WATERSHED
  99      BA      56
 100      LS       0      89
 101      UD     222

 102      KK RTE_7-8
 103      KM   ROUTING BASIN 7 TO BASIN 8
 104      RD    1500     033      05       0    TRAP      10     2 5

 105      KK   BAS_8
 106      KM   NEXT DOWNSTREAM WATERSHED
 107      BA      05
 108      LS       0      89
 109      UD     085

 110      KK B_7+B_8
 111      HC       2

 112      KKB8+B6+B2
 113      KM   COMBINE 8,6,2
 114      HC       3

 115      KK   BAS_9
 116      KM   MOST DOWNSTREAM WATERSHED
 117      BA      04
 118      LS       0      94
 119      UD     091

 120      KK B_8+B_9
 121      KM   CONFLUENCE ALL STREAMS AT BOTTOM
 122      HC       2

 123      KK  BAS_10
 124      KM   NEXT DOWNSTREAM WATERSHED
 125      BA      13
 126      LS       0      89
 127      UD     151

 128      KK  B9+B10
 129      KM   COMBINING BASIN 9 AND BASIN 10
 130      HC       2
 131      ZZ
```

```
                SCHEMATIC DIAGRAM OF STREAM NETWORK
INPUT
 LINE      (V) ROUTING          (--->) DIVERSION OR PUMP FLOW

  NO       ( ) CONNECTOR        (<---) RETURN OF DIVERTED OR PUMPED FLOW

   11       BAS_1
                V
                V
   53     RTE_1-2


   56                  BAS_2


   61     B_1+B_2


   63                  BAS_3
                           V
                           V
   68                RTE_3-4


   71                             BAS_4


   76                  B3+B4


   79                             BAS_5


   84               B3+B4+B5
                           V
                           V
   87                RTE_5-6


   90                             BAS_6


   95                B_5+B_6


   97                             BAS_7
                                      V
                                      V
  102                            RTE_7-8


  105                                         BAS_8


  110                            B_7+B_8


  112    B8+B6+B2
```

115 BAS_9

120 B_8+B_9

123 BAS_10

128 B9+B10

(***) RUNOFF ALSO COMPUTED AT THIS LOCATION

```
****************************************                    ****************************************
*                                      *                    *
*   FLOOD HYDROGRAPH PACKAGE  (HEC-1)  *                    *   U S  ARMY CORPS OF ENGINEERS
*              JUN   1998              *                    *   HYDROLOGIC ENGINEERING CENTER
*           VERSION 4 1                *                    *         609 SECOND STREET
*                                      *                    *      DAVIS, CALIFORNIA 95616
*  RUN DATE   16JAN06  TIME  08 49 21  *                    *          (916) 756-1104
*                                      *                    *
****************************************                    ****************************************
```

```
                    HARMONY GROVE HEC-1 FOR 100-YEAR Q                14312B  01/16/06
                    PRE-PROJECT CONDITION
                    THIS MODEL USES EXISTING LAND USES FOR WITHIN PROJECT BOUNDARY HOWEVER USES
                    ULTIMATE LAND USE FOR THE WATERSHEDS OUTSIDE THE PROJECT BOUNDARY
                    THE BASIN FACTOR FOR THE THE WATERSHED WAS DETERMINED TO BE 0 05
                    NEW BASIN 10 ADDED
                    REMOVED KM CARD BASIN AREA 2 8 SQUARE MILES (NO CHANGE IN Q)
                    FN  HGV100E4 HC1

 10 IO        OUTPUT CONTROL VARIABLES
                    IPRNT          5  PRINT CONTROL
                    IPLOT          1  PLOT CONTROL
                    QSCAL          0  HYDROGRAPH PLOT SCALE

    IT        HYDROGRAPH TIME DATA
                     NMIN          5  MINUTES IN COMPUTATION INTERVAL
                    IDATE     1JAN90  STARTING DATE
                    ITIME       1200  STARTING TIME
                       NQ        300  NUMBER OF HYDROGRAPH ORDINATES
                   NDDATE     2JAN90  ENDING DATE
                   NDTIME       1255  ENDING TIME
                    ICENT         19  CENTURY MARK

                COMPUTATION INTERVAL      08 HOURS
                     TOTAL TIME BASE   24 92 HOURS

          ENGLISH UNITS
               DRAINAGE AREA          SQUARE MILES
               PRECIPITATION DEPTH    INCHES
               LENGTH, ELEVATION      FEET
               FLOW                   CUBIC FEET PER SECOND
               STORAGE VOLUME         ACRE-FEET
               SURFACE AREA           ACRES
               TEMPERATURE            DEGREES FAHRENHEIT
```

RUNOFF SUMMARY

FLOW IN CUBIC FEET PER SECOND

TIME IN HOURS, AREA IN SQUARE MILES

| OPERATION | STATION | PEAK FLOW | TIME OF PEAK | AVERAGE FLOW FOR MAXIMUM PERIOD 6-HOUR | 24-HOUR | 72-HOUR | BASIN AREA | MAXIMUM STAGE | TIME OF MAX STAGE |
|---|---|---|---|---|---|---|---|---|---|
| HYDROGRAPH AT | BAS_1 | 1409 | 16 42 | 354 | 116 | 112 | 1 29 | | |
| ROUTED TO | RTE_1-2 | 1407 | 16 50 | 354 | 116 | 112 | 1 29 | | |
| HYDROGRAPH AT | BAS_2 | 669 | 16 08 | 91 | 32 | 31 | 28 | | |
| 2 COMBINED AT | B_1+B_2 | 1559 | 16 42 | 443 | 148 | 143 | 1 57 | | |
| HYDROGRAPH AT | BAS_3 | 449 | 16 08 | 52 | 17 | 16 | 19 | | |
| ROUTED TO | RTE_3-4 | 456 | 16 17 | 52 | 17 | 16 | 19 | | |
| HYDROGRAPH AT | BAS_4 | 368 | 16 08 | 53 | 18 | 17 | 18 | | |
| 2 COMBINED AT | B3+B4 | 803 | 16 17 | 105 | 35 | 33 | 37 | | |
| HYDROGRAPH AT | BAS_5 | 413 | 16 08 | 61 | 21 | 20 | 19 | | |
| 2 COMBINED AT | B3+B4+B5 | 1196 | 16 17 | 165 | 56 | 54 | 56 | | |
| ROUTED TO | RTE_5-6 | 1151 | 16 17 | 165 | 56 | 54 | 56 | | |
| HYDROGRAPH AT | BAS_6 | 139 | 16 08 | 18 | 6 | 6 | 06 | | |
| 2 COMBINED AT | B_5+B_6 | 1268 | 16 17 | 183 | 62 | 60 | 62 | | |
| HYDROGRAPH AT | BAS_7 | 1062 | 16 17 | 178 | 63 | 60 | 56 | | |
| ROUTED TO | RTE_7-8 | 1008 | 16 17 | 178 | 63 | 60 | 56 | | |
| HYDROGRAPH AT | BAS_8 | 133 | 16 08 | 16 | 6 | 5 | 05 | | |
| 2 COMBINED AT | B_7+B_8 | 1076 | 16 17 | 194 | 68 | 66 | 61 | | |
| 3 COMBINED AT | B8+B6+B2 | 3663 | 16 17 | 820 | 279 | 269 | 2 80 | | |
| HYDROGRAPH AT | BAS_9 | 113 | 16 08 | 14 | 5 | 5 | 04 | | |
| 2 COMBINED AT | B_8+B_9 | 3724 | 16 17 | 833 | 284 | 274 | 2 84 | | |
| HYDROGRAPH AT | BAS_10 | 300 | 16 08 | 41 | 15 | 14 | 13 | | |
| 2 COMBINED AT | B9+B10 | 3991 | 16 17 | 875 | 299 | 288 | 2 97 | | |

SUMMARY OF KINEMATIC WAVE - MUSKINGUM-CUNGE ROUTING
(FLOW IS DIRECT RUNOFF WITHOUT BASE FLOW)

| ISTAQ | ELEMENT | DT (MIN) | PEAK (CFS) | TIME TO PEAK (MIN) | VOLUME (IN) | INTERPOLATED TO COMPUTATION INTERVAL DT (MIN) | PEAK (CFS) | TIME TO PEAK (MIN) | VOLUME (IN) |
|---|---|---|---|---|---|---|---|---|---|
| RTE_1-2 | MANE | 5 00 | 1406 74 | 990 00 | 3 35 | 5 00 | 1406 74 | 990 00 | 3 35 |

CONTINUITY SUMMARY (AC-FT) - INFLOW= 2304E+03 EXCESS= 0000E+00 OUTFLOW= 2305E+03 BASIN STORAGE= 3656E-02 PERCENT ERROR= 0

| | | | | | | | | | |
|---|---|---|---|---|---|---|---|---|---|
| RTE_3-4 | MANE | 5 00 | 456 42 | 970 00 | 3 35 | 5 00 | 456 42 | 970 00 | 3 35 |

CONTINUITY SUMMARY (AC-FT) - INFLOW= 3394E+02 EXCESS= 0000E+00 OUTFLOW= 3395E+02 BASIN STORAGE= 3595E-02 PERCENT ERROR= 0

| | | | | | | | | | |
|---|---|---|---|---|---|---|---|---|---|
| RTE_5-6 | MANE | 3 01 | 1151 55 | 969 54 | 3 72 | 5 00 | 1151 23 | 970 00 | 3 72 |

CONTINUITY SUMMARY (AC-FT) - INFLOW= 1112E+03 EXCESS= 0000E+00 OUTFLOW= 1112E+03 BASIN STORAGE= 2182E-02 PERCENT ERROR= 0

| | | | | | | | | | |
|---|---|---|---|---|---|---|---|---|---|
| RTE_7-8 | MANE | 2 00 | 1037 99 | 973 32 | 4 16 | 5 00 | 1008 20 | 970 00 | 4 16 |

CONTINUITY SUMMARY (AC-FT) - INFLOW= 1244E+03 EXCESS= 0000E+00 OUTFLOW= 1244E+03 BASIN STORAGE= 1071E-02 PERCENT ERROR= 0

*** NORMAL END OF HEC-1 ***

# 100-Year Storm Event, Post-Project Condition

```
****************************************
*                                      *
*   FLOOD HYDROGRAPH PACKAGE  (HEC-1)  *
*              JUN   1998              *
*           VERSION 4 1                *
*                                      *
*  RUN DATE   16JAN06  TIME  08 47 30  *
*                                      *
****************************************
```

```
****************************************
*
*    U S  ARMY CORPS OF ENGINEERS
*    HYDROLOGIC ENGINEERING CENTER
*          609 SECOND STREET
*       DAVIS, CALIFORNIA 95616
*           (916) 756-1104
*
****************************************
```

```
X     X  XXXXXXX   XXXXX           X
X     X  X        X     X         XX
X     X  X        X                X
XXXXXXX  XXXX     X        XXXXX   X
X     X  X        X                X
X     X  X        X     X          X
X     X  XXXXXXX   XXXXX          XXX
```

THIS PROGRAM REPLACES ALL PREVIOUS VERSIONS OF HEC-1 KNOWN AS HEC1 (JAN 73), HEC1GS, HEC1DB, AND HEC1KW

THE DEFINITIONS OF VARIABLES -RTIMP- AND -RTIOR- HAVE CHANGED FROM THOSE USED WITH THE 1973-STYLE INPUT STRUCTURE
THE DEFINITION OF -AMSKK- ON RM-CARD WAS CHANGED WITH REVISIONS DATED 28 SEP 81  THIS IS THE FORTRAN77 VERSION
NEW OPTIONS  DAMBREAK OUTFLOW SUBMERGENCE , SINGLE EVENT DAMAGE CALCULATION, DSS WRITE STAGE FREQUENCY,
DSS READ TIME SERIES AT DESIRED CALCULATION INTERVAL  LOSS RATE GREEN AND AMPT INFILTRATION
KINEMATIC WAVE  NEW FINITE DIFFERENCE ALGORITHM

```
          LINE          ID       1       2       3       4       5       6       7       8       9      10

                        *DIAGRAM
             1          ID   HARMONY GROVE HEC-1 FOR 100-YEAR Q                  14312B  01/16/06
             2          ID   POST-PROJECT CONDITION INCLUDING NEW DEVELOPMENT IN EAST VILLAGE
             3          ID   THIS MODEL USES PROPOSED LAND USES FOR WITHING PROJECT BOUNDARY HOWEVER
             4          ID   USES ULTIMATE LAND USE FOR THE WATERSHEDS OUTSIDE THE PROJECT BOUNDARY
             5          ID   OUTSIDE THE PROJECT BOUNDRAY, THE BASIN FACTOR IS THE SAME FOR PRE AND POST
             6          ID   BASIN FACTOR INSIDE THE BOUNDARY IS 0 018
             7          ID   NEW BASIN 10 ADDED
             8          ID   NEW RD CARD FOR BASIN 6
             9          ID   REMOVED KM CARD BASIN AREA 2 8 SQUARE MILES (NO CHANGE IN Q)
            10          ID   FN  HG_100P4 HC1
*** FREE ***
            11          IT       5 01JAN90    1200     300
            12          IO       5       1

            13          KK   BAS_1
            14          KM   NESTED STORM PER COUNTY OF SAN DIEGO HYDROLOGY MANUAL
            15          KM   COPYRIGHT 2003 RICK ENGINEERING COMPANY
            16          KM   THE FOLLOWING IT CARD MUST BE USED IN YOUR DATA SET
            17          KM   IT 5 01JAN90 1200 300
            18          KM   6HR RAINFALL IS  3 3  INCHES
            19          KM   24HR RAINFALL IS  5 7  INCHES
            20          KM   DAR30 =   96752
            21          KM   DAR60 =   9832
            22          KM   DAR180 =   9888
            23          KM   DAR360 =   9916
            24          KM   DAR1440 =   9944
            25          IN       5 01JAN90    1200     300
            26          PI   00779   00783   00784   00788   00789   00793   00795   00798     008   00803
            27          PI   00805   00809   00811   00814   00816    0082   00822   00826   00828   00831
            28          PI   00833   00837   00839   00843   00845   00849   00852   00856   00858    0086
            29          PI   00864   00869   00871   00875   00878   00882   00884   00889   00891    0089
            30          PI   00899   00903   00906   00911   00913   00918   00921   00926   00929    0093
            31          PI   00937   00942   00945    0095   00953   00959   00962   00967    0097   00976
            32          PI   00979   00985   00988   00995   00998   01004   01007   01014   01017    0102
            33          PI   01027   01034   01038   01045   01049   01056    0106   01067   01071   01079
            34          PI   01082    0109   01094   01103   01107   01115    0112   01128   01133   01142
            35          PI   01146   01155    0116    0117   01174   01184   01189     012   01205   01215
            36          PI   01221   01232   01237   01249   01254   01266   01272   01284   01291    0130
            37          PI    0131   01323    0133   01344   01351   01365   01372   01387   01395   01411
            38          PI   01419   01435   01443   01461   01469   01487   01497   01515   01525    0154
            39          PI   01555   01576   01587   01609    0162   01644   01656   01681   01693    0172
            40          PI   01733   01761   01776    0165   01664   01694    0171   01743   01759   01794
            41          PI   01813   01851    0187   01912   01933   01978   02002   02052   02078   02132
            42          PI   02161   02222   02254   02322   02359   02435   02476   02604    0265   02749
            43          PI   02803   02919   02982   03119   03195   03362   03454   03662   03778    0404
            44          PI   04197   04554   04765   05679   05966   06709   07205     083   09453   13881
            45          PI   19557   70102   11133   07827   06304   05003   04366   03905   03554    0327
            46          PI   03048   02859   02698   02519   02396   02288   02191   02105   02026    0195
            47          PI   01891   01831   01777   01726   01679    0179   01747   01706   01668   01632
            48          PI   01598   01566   01535   01506   01478   01452   01427   01403    0138   01358
            49          PI   01337   01316   01297   01278    0126   01243   01226    0121   01194   01179
            50          PI   01165   01151   01137   01124   01111   01099   01086   01075   01063    0105
            51          PI   01041   01031   01021   01011   01001   00991   00982   00973      00
            52          BA    1 29
```

```
LINE          ID       1       2       3       4       5       6       7       8       9      10

  53          LS       0      82
  54          UD     466

  55          KK RTE_1-2
  56          KM   ROUTING BASIN 1 TO BASIN 2
  57          KM   MANNINGS N VALUE FROM COUNTY OF SAN DIEGO 1993
  58          KM   1 PERCENT SLOPE
  59          RD    2500      01     075       0    TRAP      70       2

  60          KK  DETAIN
  61          RS       1    STOR      -1
  62          SV       0     8 0    8 06    8 07
  63          SQ       0     185     585    1420
  64          SE     100     101     102     103

  65          KK   BAS_2
  66          KM   NEXT DOWNSTREAM WATERSHED
  67          BA      28
  68          LS       0      95
  69          UD     026

  70          KK B_1+B_2
  71          HC       2

  72          KK   BAS_3
  73          KM   START NEW UPSTREAM WATERSHED
  74          BA      19
  75          LS       0      81
  76          UD      11

  77          KK RTE_3-4
  78          KM   ROUTING BASIN 3 TO BASIN 4
  79          KM   MOSTLY NATRUAL CHANEL
  80          KM   SLOPE (810-670)/3500
  81          KM   FOR MANNING  05 SAME AS PRE UNLESS WERE HAVEING HABITAT MITIGATION  075
  82          RD    3500      04      05       0    TRAP      10     2 5

  83          KK   BAS_4
  84          KM   NEXT DOWNSTREAM WATERSHED
  85          BA      18
  86          LS       0      86
  87          UD     031

  88          KK   B3+B4
  89          KM   COMBINING BASIN 3 AND 4
  90          HC       2

  91          KK   BAS_5
  92          KM   START NEW UPSTREAM WATERSHED
  93          BA      19
  94          LS       0      92
  95          UD     164
```

```
LINE          ID       1       2       3       4       5       6       7       8       9      10

 96           KKB3+B4+B5
 97           KM   COMBINING THE ALREADY ROUTED 3INTO 4 TO BASIN 5
 98           HC       2

 99           KK RTE_5-6
100           KM   ROUTING BASIN 5 TO BASIN 6
101           KM   AROUND 2500
102           KM   MANNING N AVERAGE  075
103           KM   BOTTOM WIDTH 50 FT
104           KM   AVERAGE Z IS 2
105           RD    2500      01     075       0    TRAP      50       2

106           KK   BAS_6
107           KM   NEXT DOWNSTREAM WATERSHED
108           BA      06
109           LS       0      90
110           UD     024

111           KK B_5+B_6
112           HC       2

113           KK   BAS_7
114           KM   START NEW UPSTREAM WATERSHED
115           BA      56
116           LS       0      89
117           UD     222

118           KK RTE_7-8
119           KM   ROUTING BASIN 7 TO BASIN 8
120           KM   1500 FOR LENGTH
121           KM   SLOPE
122           KM   108 IN DIAMETER PIPE
123           KM   NO Z VALUE SIDE SLOPE
124           RD    1500     033     012       0    CIRC       9

125           KK  DETAIN
126           RS       1    STOR      -1
127           SV       0    11 0   11 75   11 76
128           SQ       0     110     560    1023
129           SE     100     101     102     103

130           KK   BAS_8
131           KM   NEXT DOWNSTREAM WATERSHED
132           BA      05
133           LS       0      96
134           UD     004

135           KK B_7+B_8
136           HC       2
```

SCHEMATIC DIAGRAM OF STREAM NETWORK

```
INPUT
 LINE      (V) ROUTING          (--->) DIVERSION OR PUMP FLOW

  NO       ( ) CONNECTOR        (<---) RETURN OF DIVERTED OR PUMPED FLOW

   13       BAS_1
                V
                V
   55     RTE_1-2
                V
                V
   60      DETAIN


   65                  BAS_2


   70     B_1+B_2


   72                  BAS_3
                           V
                           V
   77                RTE_3-4


   83                              BAS_4


   88                  B3+B4


   91                              BAS_5


   96               B3+B4+B5
                           V
                           V
   99                RTE_5-6


  106                              BAS_6


  111                B_5+B_6


  113                              BAS_7
                                       V
                                       V
  118                            RTE_7-8
                                       V
                                       V
  125                             DETAIN


  130                                        BAS_8
```

135 B_7+B_8

137 B8+B6+B2

140 BAS_9

145 B_8+B_9

148 BAS_10

153 B9+B10

(***) RUNOFF ALSO COMPUTED AT THIS LOCATION

```
****************************************
*                                      *
*   FLOOD HYDROGRAPH PACKAGE  (HEC-1)  *
*              JUN   1998              *
*           VERSION 4 1                *
*                                      *
*  RUN DATE   16JAN06  TIME  08 47 30  *
*                                      *
****************************************
```

```
****************************************
*                                      *
*    U S  ARMY CORPS OF ENGINEERS      *
*    HYDROLOGIC ENGINEERING CENTER     *
*          609 SECOND STREET           *
*       DAVIS, CALIFORNIA 95616        *
*           (916) 756-1104             *
*                                      *
****************************************
```

```
                    HARMONY GROVE HEC-1 FOR 100-YEAR Q                14312B  01/16/06
                    POST-PROJECT CONDITION INCLUDING NEW DEVELOPMENT IN EAST VILLAGE
                    THIS MODEL USES PROPOSED LAND USES FOR WITHING PROJECT BOUNDARY HOWEVER
                    USES ULTIMATE LAND USE FOR THE WATERSHEDS OUTSIDE THE PROJECT BOUNDARY
                    OUTSIDE THE PROJECT BOUNDRAY, THE BASIN FACTOR IS THE SAME FOR PRE AND POST
                    BASIN FACTOR INSIDE THE BOUNDARY IS 0 018
                    NEW BASIN 10 ADDED
                    NEW RD CARD FOR BASIN 6
                    REMOVED KM CARD BASIN AREA 2 8 SQUARE MILES (NO CHANGE IN Q)
                    FN  HG_100P4 HC1

 12 IO          OUTPUT CONTROL VARIABLES
                      IPRNT           5  PRINT CONTROL
                      IPLOT           1  PLOT CONTROL
                      QSCAL           0  HYDROGRAPH PLOT SCALE

    IT          HYDROGRAPH TIME DATA
                       NMIN           5  MINUTES IN COMPUTATION INTERVAL
                      IDATE      1JAN90  STARTING DATE
                      ITIME        1200  STARTING TIME
                         NQ         300  NUMBER OF HYDROGRAPH ORDINATES
                     NDDATE      2JAN90  ENDING DATE
                     NDTIME        1255  ENDING TIME
                      ICENT          19  CENTURY MARK

                 COMPUTATION INTERVAL      08 HOURS
                      TOTAL TIME BASE   24 92 HOURS

         ENGLISH UNITS
              DRAINAGE AREA          SQUARE MILES
              PRECIPITATION DEPTH    INCHES
              LENGTH, ELEVATION      FEET
              FLOW                   CUBIC FEET PER SECOND
              STORAGE VOLUME         ACRE-FEET
              SURFACE AREA           ACRES
              TEMPERATURE            DEGREES FAHRENHEIT
```

RUNOFF SUMMARY

FLOW IN CUBIC FEET PER SECOND

TIME IN HOURS, AREA IN SQUARE MILES

| OPERATION | STATION | PEAK FLOW | TIME OF PEAK | AVERAGE FLOW FOR MAXIMUM PERIOD 6-HOUR | 24-HOUR | 72-HOUR | BASIN AREA | MAXIMUM STAGE | TIME OF MAX STAGE |
|---|---|---|---|---|---|---|---|---|---|
| HYDROGRAPH AT | BAS_1 | 1436 | 16 42 | 361 | 120 | 115 | 1 29 | | |
| ROUTED TO | RTE_1-2 | 1437 | 16 50 | 361 | 120 | 115 | 1 29 | | |
| ROUTED TO | DETAIN | 1418 | 16 50 | 360 | 120 | 115 | 1 29 | 103 00 | 16 50 |
| HYDROGRAPH AT | BAS_2 | 1211 | 16 00 | 96 | 36 | 35 | 28 | | |
| 2 COMBINED AT | B_1+B_2 | 1622 | 16 00 | 452 | 156 | 150 | 1 57 | | |
| HYDROGRAPH AT | BAS_3 | 449 | 16 08 | 52 | 17 | 16 | 19 | | |
| ROUTED TO | RTE_3-4 | 456 | 16 17 | 52 | 17 | 16 | 19 | | |
| HYDROGRAPH AT | BAS_4 | 707 | 16 00 | 55 | 19 | 18 | 18 | | |
| 2 COMBINED AT | B3+B4 | 854 | 16 00 | 107 | 36 | 34 | 37 | | |
| HYDROGRAPH AT | BAS_5 | 428 | 16 08 | 63 | 23 | 22 | 19 | | |
| 2 COMBINED AT | B3+B4+B5 | 1122 | 16 00 | 170 | 59 | 57 | 56 | | |
| ROUTED TO | RTE_5-6 | 1155 | 16 17 | 170 | 59 | 57 | 56 | | |
| HYDROGRAPH AT | BAS_6 | 248 | 16 00 | 19 | 7 | 7 | 06 | | |
| 2 COMBINED AT | B_5+B_6 | 1204 | 16 17 | 189 | 66 | 63 | 62 | | |
| HYDROGRAPH AT | BAS_7 | 1062 | 16 17 | 178 | 63 | 60 | 56 | | |
| ROUTED TO | RTE_7-8 | 1045 | 16 17 | 179 | 63 | 60 | 56 | | |
| ROUTED TO | DETAIN | 1023 | 16 17 | 175 | 63 | 60 | 56 | 103 00 | 16 17 |
| HYDROGRAPH AT | BAS_8 | 218 | 16 00 | 17 | 7 | 6 | 05 | | |
| 2 COMBINED AT | B_7+B_8 | 1065 | 16 17 | 192 | 69 | 67 | 61 | | |
| 3 COMBINED AT | B8+B6+B2 | 3162 | 16 17 | 832 | 291 | 280 | 2 80 | | |
| HYDROGRAPH AT | BAS_9 | 174 | 16 00 | 14 | 5 | 5 | 04 | | |
| 2 COMBINED AT | B_8+B_9 | 3196 | 16 17 | 845 | 296 | 285 | 2 84 | | |
| HYDROGRAPH AT | BAS_10 | 343 | 16 08 | 45 | 17 | 16 | 13 | | |
| 2 COMBINED AT | B9+B10 | 3468 | 16 17 | 889 | 313 | 301 | 2 97 | | |

SUMMARY OF KINEMATIC WAVE - MUSKINGUM-CUNGE ROUTING
(FLOW IS DIRECT RUNOFF WITHOUT BASE FLOW)

| ISTAQ | ELEMENT | DT (MIN) | PEAK (CFS) | TIME TO PEAK (MIN) | VOLUME (IN) | INTERPOLATED TO COMPUTATION INTERVAL DT (MIN) | PEAK (CFS) | TIME TO PEAK (MIN) | VOLUME (IN) |
|---|---|---|---|---|---|---|---|---|---|
| RTE_1-2 | MANE | 5 00 | 1436 91 | 990 00 | 3 45 | 5 00 | 1436 91 | 990 00 | 3 45 |

CONTINUITY SUMMARY (AC-FT) - INFLOW= 2372E+03 EXCESS= 0000E+00 OUTFLOW= 2372E+03 BASIN STORAGE= 1151E-01 PERCENT ERROR= 0

| | | | | | | | | | |
|---|---|---|---|---|---|---|---|---|---|
| RTE_3-4 | MANE | 5 00 | 456 42 | 970 00 | 3 35 | 5 00 | 456 42 | 970 00 | 3 35 |

CONTINUITY SUMMARY (AC-FT) - INFLOW= 3394E+02 EXCESS= 0000E+00 OUTFLOW= 3395E+02 BASIN STORAGE= 3595E-02 PERCENT ERROR= 0

| | | | | | | | | | |
|---|---|---|---|---|---|---|---|---|---|
| RTE_5-6 | MANE | 5 00 | 1155 04 | 970 00 | 3 90 | 5 00 | 1155 04 | 970 00 | 3 90 |

CONTINUITY SUMMARY (AC-FT) - INFLOW= 1164E+03 EXCESS= 0000E+00 OUTFLOW= 1164E+03 BASIN STORAGE= 1130E-01 PERCENT ERROR= 0

| | | | | | | | | | |
|---|---|---|---|---|---|---|---|---|---|
| RTE_7-8 | MANE | 58 | 1056 07 | 970 82 | 4 16 | 5 00 | 1045 05 | 970 00 | 4 17 |

CONTINUITY SUMMARY (AC-FT) - INFLOW= 1244E+03 EXCESS= 0000E+00 OUTFLOW= 1244E+03 BASIN STORAGE= 8767E-04 PERCENT ERROR= 0

*** NORMAL END OF HEC-1 ***

# APPENDIX G

## Support Material for the Hydraulic Analyses (HEC-2) Analyses

Table 4. Summary of Discharges (Cont'd)

| Flooding Source and Location | Drainage Area (Square Miles) | Peak Discharges (cfs) 10-Year | 50-Year | 100-Year | 500-Year |
|---|---|---|---|---|---|
| Coyote Creek | | | | | |
| At Apex of Alluvial Fan | 132.0 | 5,200 | 16,000 | 24,000 | 35,200 |
| Culp-Tubb Canyon | | | | | |
| At Apex of Alluvial Fan | 13.0 | 2,400 | 6,000 | 8,500 | 12,500 |
| Deer Springs Creek | | | | | |
| At Mouth | 1.8 | --[1] | --[1] | 1,550 | --[1] |
| Descanso Creek | | | | | |
| At Mouth | 5.6 | 1,300 | 3,800 | 6,000 | 10,400 |
| Dry Canyon | | | | | |
| At Apex of Alluvial Fan | 1.9 | 450 | 1,150 | 1,700 | 2,650 |
| Encanto Branch | | | | | |
| Above Confluence with South Las Chollas Creek | 6.0 | 1,200 | 2,700 | 3,500 | 6,600 |
| Above Confluence with Radio Drive Tributary | 4.8 | 1,100 | 2,600 | 3,400 | 6,500 |
| At 64th Street | 4.2 | 950 | 2,300 | 3,000 | 6,100 |
| Above Confluence with Jamacha Branch | 2.4 | 640 | 1,400 | 1,700 | 3,200 |
| Escondido Creek | | | | | |
| At Interstate Highway 5 | 77.7 | 3,400 | 15,500 | 22,000 | 41,000 |
| Upstream of Lake Val Sereno | 68.0 | 3,200 | 14,500 | 21,000 | 38,400 |
| Upstream of Elfin Forest Lake | 55.7 | 2,800 | 13,000 | 19,000 | 35,000 |
| At Harmony Grove Road | 48.3 | 2,600 | 12,000 | 18,000 | 32,000 |
| Approximately 11,200 feet Upstream of Wohlford Dam | 2.2 | --[1] | --[1] | 2,700 | --[1] |
| Eucalyptus Hills East Branch | | | | | |
| At Riverside Drive | 1.5 | --[1] | --[1] | 860 | --[1] |

[1]Data Not Available

HARMONY GROVE VILLAGE
J-14312B
05/01/05

* STARTING WATER SURFACE ELEV FOR ESCONDIDO CK. HYDRAULIC ANALYSIS
(EXHIBIT 1 of 2)

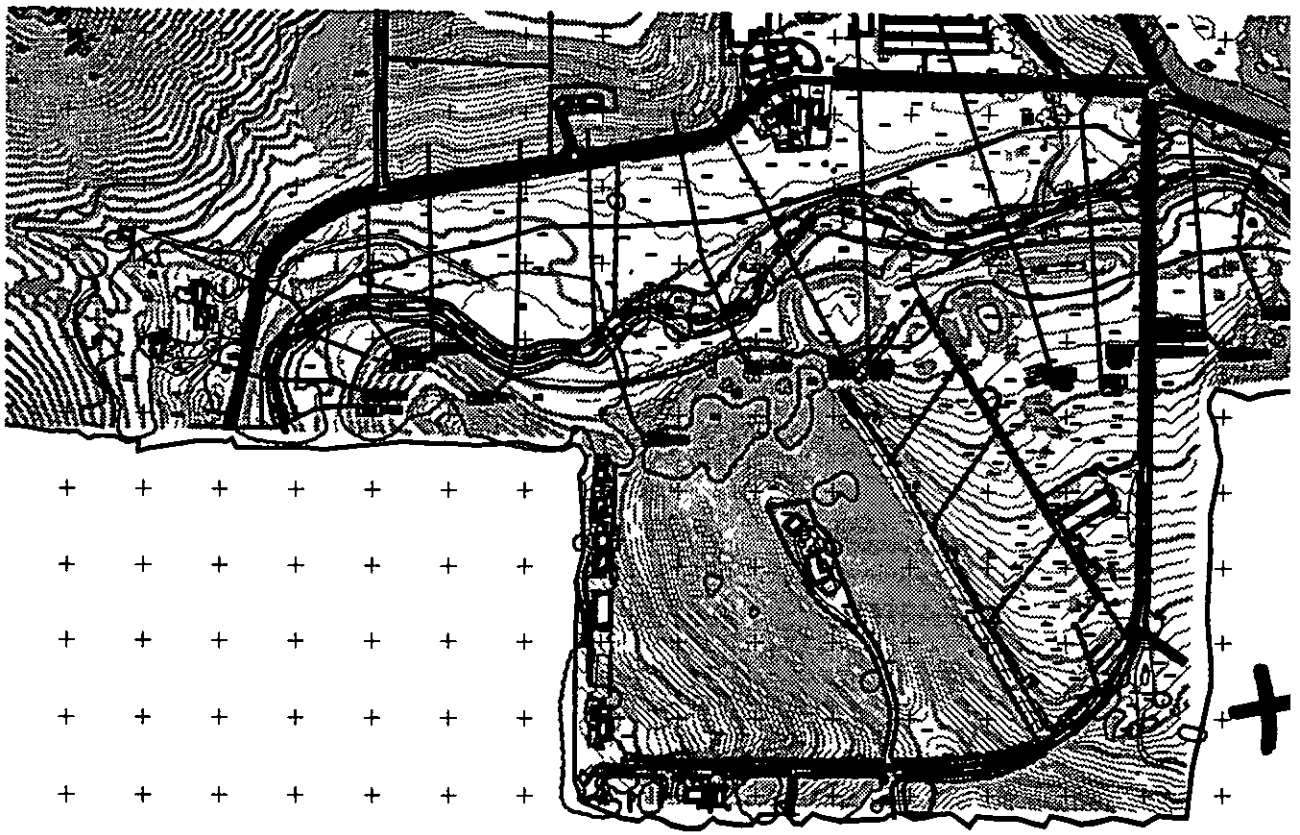

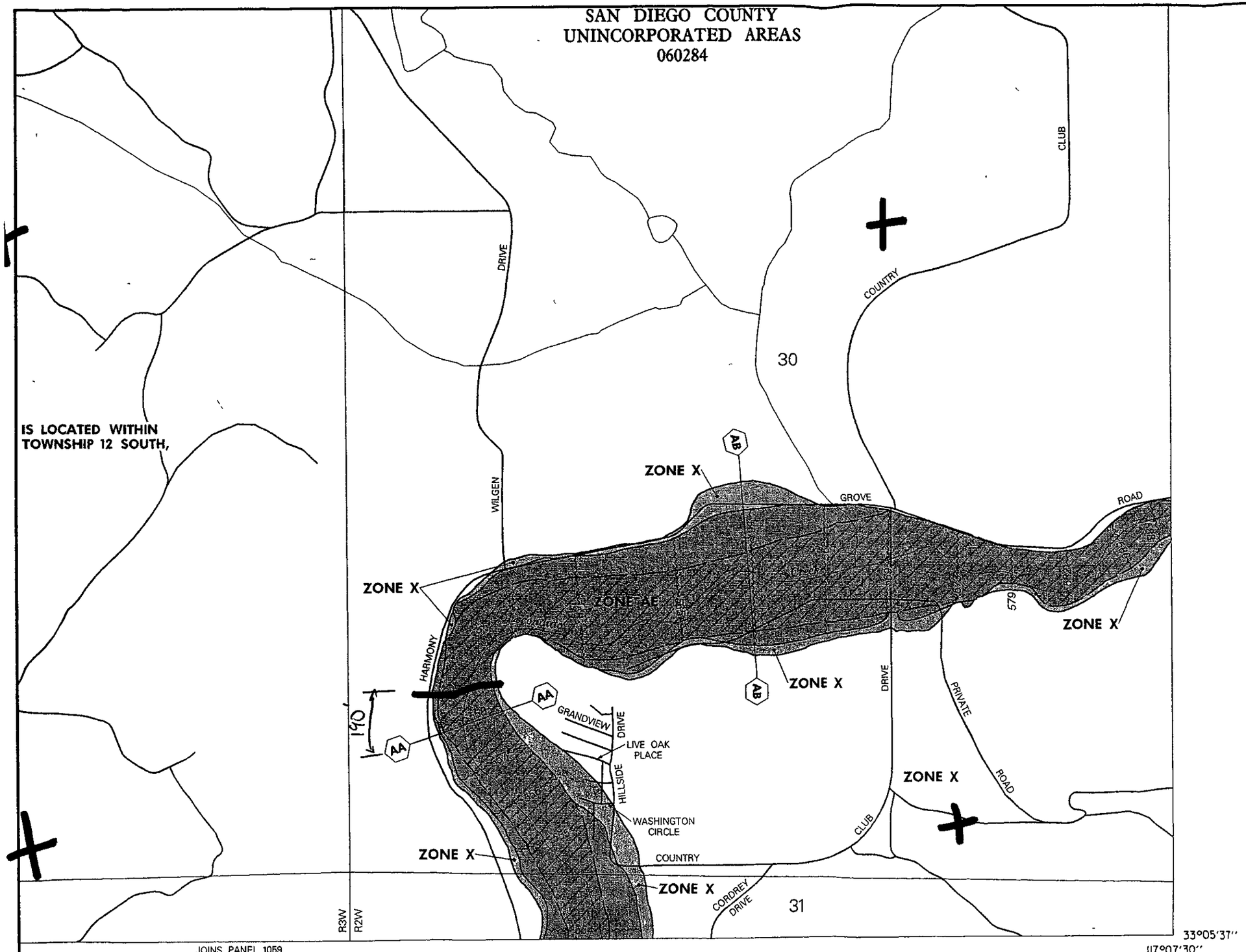


APPROXIMATE SCALE IN FEET

500 0 500

NATIONAL FLOOD INSURANCE PROGRAM

# FIRM
## FLOOD INSURANCE RATE MAP

SAN DIEGO COUNTY, CALIFORNIA AND INCORPORATED AREAS

**PANEL 1057 OF 2375**
(SEE MAP INDEX FOR PANELS NOT PRINTED)

| CONTAINS COMMUNITY | NUMBER | PANEL | SUFFIX |
|---|---|---|---|
| ESCONDIDO CITY OF | 060290 | 1057 | F |
| SAN DIEGO COUNTY UNINCORPORATED AREAS | 060284 | 1057 | F |
| SAN MARCOS CITY OF | 060296 | 1057 | F |

**MAP NUMBER**
**06073C1057 F**

**EFFECTIVE DATE:**
**JUNE 19, 1997**

Federal Emergency Management Agency

This is an official copy of a portion of the above referenced flood map It was extracted using F-MIT On-Line This map does not reflect changes or amendments which may have been made subsequent to the date on the title block For the latest product information about National Flood Insurance Program flood maps check the FEMA Flood Map Store at www msc fema gov

HARMONY GROVE VILLAGE, J-14312B, 05/01/05

* STARTING USE FOR ESCONDIDO UK HYDRAULIC ANAL (EXIBIT 2 OF 2)

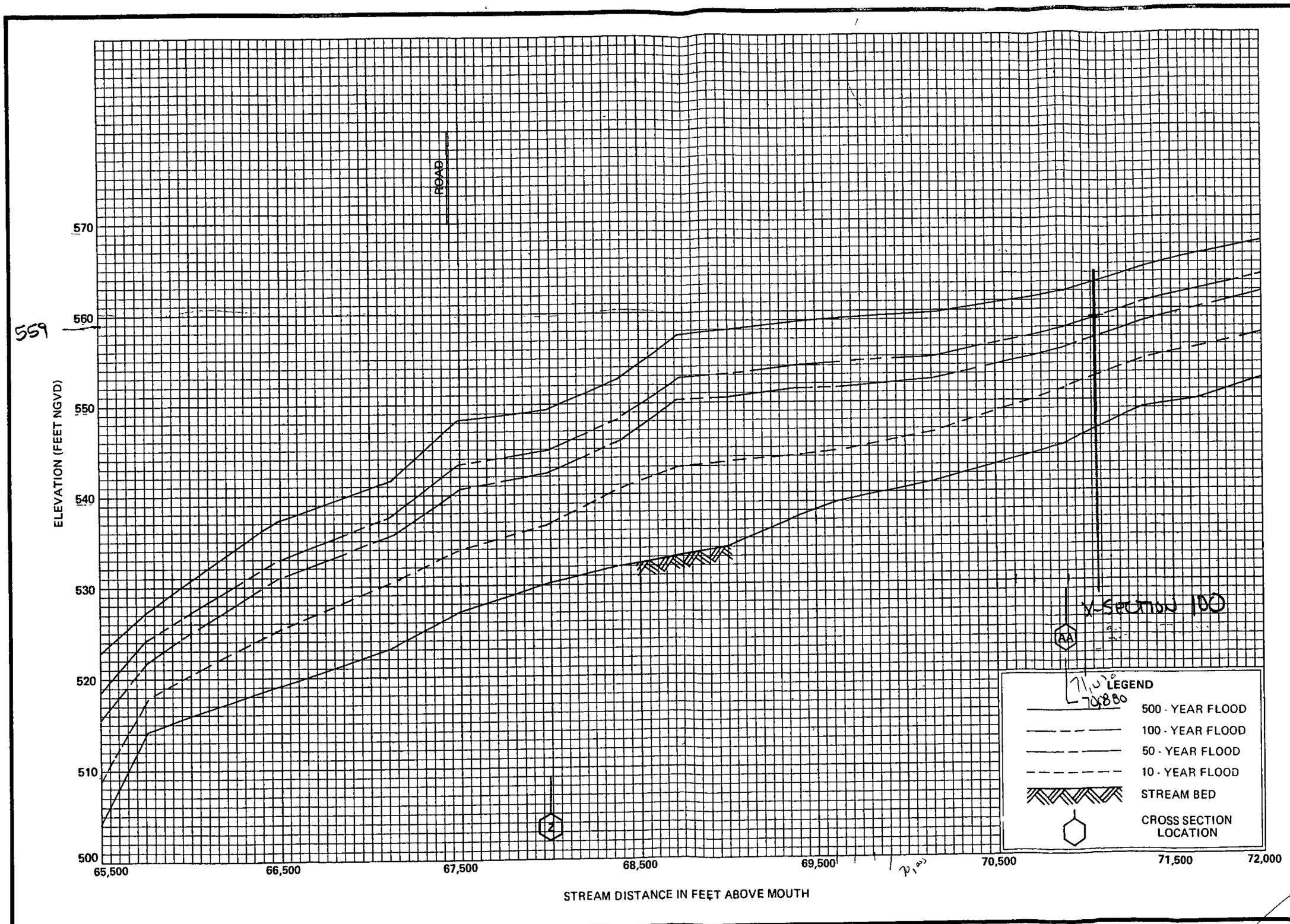


FLOOD PROFILES

ESCONDIDO CREEK

FEDERAL EMERGENCY MANAGEMENT AGENCY

SAN DIEGO COUNTY, CA
AND INCORPORATED AREAS

```
*****************************************
*  HEC-2 WATER SURFACE PROFILES          *
*                                        *
*  Version   4 6 2,  May 1991            *
*                                        *
*  RUN DATE    16DEC05    TIME   17 30 46 *
*****************************************
```

```
*************************************
*  U S  ARMY CORPS OF ENGINEERS
*  HYDROLOGIC ENGINEERING CENTER
*  609 SECOND STREET, SUITE D
*  DAVIS, CALIFORNIA 95616-4687
*          (916) 756-1104
*************************************
```

```
X     X  XXXXXXX   XXXXX              XXXXX
X     X  X        X     X            X     X
X     X  X        X                        X
XXXXXXX  XXXX     X          XXXXX    XXXXX
X     X  X        X                  X
X     X  X        X     X            X
X     X  XXXXXXX   XXXXX             XXXXXXX
```

THIS RUN EXECUTED 16DEC05 17 30 46

```
************************************
 HEC-2 WATER SURFACE PROFILES

 Version  4 6 2,  May 1991
************************************


T1      C-DOVES COUNTY OF SAN DIEGO ZONE 1
T2      GEORGE S  NOLTE AND ASSOCIATES
T3      ESCONDIDO CK UPPER REACH 100-YR

J1  ICHECK    INQ       NINV      IDIR      STRT      METRIC    HVINS     Q         WSEL      FQ

          3                                 0102                                543

J2  NPROF     IPLOT     PRFVS     XSECV     XSECH     FN        ALLDC     IBW       CHNIM     ITRACE

 1             0        -1                                                                15


J3  VARIABLE CODES FOR SUMMARY PRINTOUT

     38         1         43         42         21         22         27         28         53         54
 150

NC    045       04         04         1          3
QT   5         32400      18700      12700      2740       18700
ET                                                          7 1        4907       5108 4
        D/S LIMIT OF STUDY
        STARTING WATER SURFACE ELEVATIONS ARE NORMAL DEPTH FOR BASE CASE
                AND NORMAL DEPTH PLUS ONE FOOT FOR FLOODWAY,
                SINCE PROFILE CONCURRENCE AT D/S LIMIT OF STUDY REQUIRES
                SIGNIFICANT BACKWATER IN FIRST SEVERAL SECTIONS
        FLOODWAY CONSISTS OF EXISTING DELINEATION WITH MODIFICATIONS
                FLOODWAY IS EXPANDED WHERE REQUIRED DUE TO HIGH VELOCITY
                CONDITIONS OUTSIDE EXISTING FLOODWAY
                FLOODWAY IS MADE NARROWER ONLY WHERE EXISTING FLOODWAY EXCEEDS
                LIMITS OF 100-YR EFFECTIVE FLOW BOUNDARY   THE NARROWER
                DELINEATION APPEARS ONLY IN THE DECK FOR SAKE OF COMPUTATION,
                THE CHANGE WILL NOT APPEAR ON THE MAP
                SEE TABLE IN BACKUP MATERIAL FOR SECTIONS AFFECTED
X1   400 0    29 0       4955 6     5025 2
GR   569 5    4830 8     562 0      4858 8     544 3      4883 3     534 4      4915 9     530 5      4941 7
GR   530 0    4955 6     529 2      4968 6     529 2      4981 0     528 3      4989 0     526 8      4994 9
GR   526 7    5000 0     526 7      5006 8     529 5      5015 9     530 1      5025 2     531 0      5042 4
GR   533 4    5055 5     534 4      5069 8     534 6      5095 1     538 6      5109 4     539 0      5124 0
GR   539 1    5142 7     543 3      5166 2     551 5      5197 8     560 7      5225 9     577 4      5264 2
GR   583 8    5291 1     585 9      5310 4     585 9      5333 1     596 5      5354 5
```

```
ET                                                  7 1       4931      5120
X1   402 0    29 0      4954 5    5052 1    310 0     300 0     305 4
GR   592 0    4843 6    577 8     4862 3    569 1     4876 2    561 1     4898 1    548 6     4915 8
GR   537 3    4942 3    534 6     4954 5    534 6     4977 5    531 8     4987 5    529 9     4991 6
GR   529 8    5000 0    529 8     5009 1    531 0     5013 8    531 7     5030 3    533 6     5045 5
GR   535 1    5052 1    537 5     5061 4    537 7     5074 7    538 4     5086 5    537 6     5101 4
GR   540 0    5117 7    544 9     5136 7    549 5     5170 8    553 3     5200 2    564 9     5231 3
GR   573 2    5246 0    577 3     5277 2    584 6     5306 1    592 3     5326 7

ET                                                  7 1       4887      5090
X1   404 0    22 0      4897 2    5046 2    450 0     390 0     408 6
GR   557 1    4748 0    553 6     4791 4    548 9     4863 2    547 1     4883 4    544 3     4897 2
GR   540 1    4918 8    537 8     4939 9    536 1     4964 4    536 6     4981 8    533 3     4991 6
GR   533 0    5000 0    533 0     5009 1    535 0     5019 0    537 2     5033 8    540 4     5046 2
GR   541 4    5058 0    541 2     5085 4    548 8     5095 3    562 0     5110 3    572 7     5129 5
GR   588 2    5158 5    601 4     5183 1

ET                                                  7 1       4914 7    5181 5
        CHANNEL CENTERLINE AT 5138 9
X1   406 0    29 0      5079 5    5181 5    555       520       528
GR   592 4    4432 5    587 4     4470 3    580 3     4522 5    572 2     4579 1    567 8     4617 5
GR   564 9    4653 5    557 7     4705 3    553 9     4753 4    550 8     4809 0    548 4     4824 4
GR   545 6    4870 6    542 7     4886 8    541 5     4914 7    540 2     4970 4    538 9     4984 4
GR   537 3    5000 0    537 9     5009 5    539 1     5022 6    541 5     5079 5    537 2     5138 9
GR   539 4    5168 8    547 0     5181 5    550 7     5213 4    554 1     5252 3    567 6     5297 0
GR   566 4    5319 3    581 4     5336 9    596 6     5362 3    613 9     5398 1

ET                                                  7 1       4801 2    5080 7
X1   408 0    29 0      4939 8    5080 7    400       365       378
GR   568 3    4536 5    564 0     4557 1    559 5     4570 5    569 1     4578 4    567 4     4604 3
GR   556 1    4609 8    554 5     4624 4    551 9     4677 3    549 0     4739 0    546 5     4785 3
GR   546 1    4801 2    545 1     4820 7    539 9     4840 4    544 8     4939 8    542 3     4966 4
GR   539 1    4981 2    538 8     5000 0    538 8     5012 5    545 6     5060 4    549 8     5080 7
GR   552 9    5104 5    555 7     5151 3    557 2     5179 7    562 4     5223 9    571 9     5246 9
GR   571 1    5268 3    574 5     5276 0    583 1     5302 8    594 1     5324 7

NC            045
ET                      9 1                           7 1       4789 9    5062 1    4789 9    5300 0
X1   410 0    41 0      4969 8    5062 1    535 0     460 0     492
GR   581 8    4370 2    576 2     4399 6    571 9     4437 5    567 7     4469 0    566 7     4498 9
GR   573 2    4520 4    562 6     4534 8    556 9     4550 7    557 0     4564 3    564 1     4568 9
GR   563 7    4600 2    553 8     4609 8    552 8     4672 9    552 4     4722 8    552 7     4752 7
GR   562 1    4755 9    559 9     4769 7    552 1     4775 8    552 8     4789 9    552 4     4805 5
GR   549 6    4816 4    548 2     4827 3    546 9     4850 9    554 9     4892 3    551 4     4943 8
GR   548 4    4969 8    540 8     4987 3    538 4     4992 7    538 6     5000 0    538 6     5006 7
GR   539 8    5022 3    541 4     5043 0    550 0     5062 1    552 5     5096 3    555 6     5132 9
GR   565 2    5175 8    565 4     5198 8    569 4     5230 0    579 7     5254 0    586 4     5282 0
GR   592 7    5305 2
```

| | | | | | | | | | | |
|---|---|---|---|---|---|---|---|---|---|---|
| ET | | | | | | 7 1 | 4830 | 5150 | | |
| X1 | 412 0 | 28 0 | 4938 3 | 5144 8 | 540 0 | 627 | 587 | | | |
| GR | 592 3 | 4685 6 | 585 8 | 4705 2 | 577 0 | 4737 3 | 561 1 | 4785 4 | 553 3 | 4837 6 |
| GR | 553 9 | 4869 5 | 552 8 | 4900 7 | 552 3 | 4922 3 | 551 2 | 4938 3 | 549 0 | 4960 5 |
| GR | 544 5 | 4977 6 | 542 5 | 4994 8 | 541 5 | 5000 0 | 541 8 | 5008 0 | 542 8 | 5027 1 |
| GR | 544 5 | 5062 7 | 540 5 | 5081 7 | 551 8 | 5144 8 | 556 3 | 5185 8 | 566 1 | 5219 6 |
| GR | 572 4 | 5232 7 | 570 9 | 5259 8 | 575 3 | 5287 5 | 583 2 | 5345 4 | 590 8 | 5386 3 |
| GR | 586 8 | 5415 2 | 596 9 | 5447 6 | 603 1 | 5482 1 | | | | |
| ET | | | | | | 7 1 | 4897 1 | 5165 | | |
| X1 | 414 0 | 26 0 | 4967 0 | 5055 7 | 500 0 | 800 0 | 630 | | | |
| GR | 626 5 | 4719 3 | 618 8 | 4756 7 | 608 0 | 4783 8 | 595 3 | 4824 7 | 571 9 | 4863 6 |
| GR | 556 9 | 4899 1 | 549 8 | 4944 3 | 549 8 | 4967 0 | 545 7 | 4977 6 | 543 8 | 4989 2 |
| GR | 543 4 | 5000 0 | 543 3 | 5006 0 | 545 8 | 5010 8 | 549 0 | 5031 9 | 551 7 | 5055 7 |
| GR | 551 4 | 5076 6 | 552 4 | 5136 4 | 556 2 | 5161 9 | 558 5 | 5193 1 | 559 0 | 5219 7 |
| GR | 563 3 | 5248 0 | 565 0 | 5277 5 | 566 5 | 5282 4 | 567 7 | 5305 6 | 571 4 | 5314 4 |
| GR | 575 8 | 5326 5 | | | | | | | | |
| NC | 03 | 03 | 035 | | | | | | | |
| ET | | | | | | 7 1 | 4800 2 | 5245 | | |
| X1 | 416 0 | 43 0 | 4960 4 | 5027 1 | 720 | 700 | 720 | | | |
| GR | 674 3 | 4214 2 | 673 8 | 4255 2 | 672 5 | 4296 6 | 666 5 | 4380 4 | 661 1 | 4439 8 |
| GR | 651 3 | 4496 2 | 642 3 | 4537 1 | 629 4 | 4589 0 | 614 3 | 4627 7 | 601 7 | 4669 7 |
| GR | 584 7 | 4714 7 | 575 3 | 4745 7 | 567 4 | 4771 5 | 562 9 | 4799 5 | 558 8 | 4815 8 |
| GR | 555 8 | 4844 1 | 556 7 | 4866 2 | 557 6 | 4908 4 | 557 3 | 4941 8 | 556 9 | 4960 4 |
| GR | 552 8 | 4966 7 | 551 1 | 4980 4 | 550 2 | 4995 4 | 550 0 | 5000 0 | 550 0 | 5005 5 |
| GR | 552 5 | 5009 4 | 556 6 | 5016 7 | 560 6 | 5027 1 | 560 8 | 5051 5 | 561 2 | 5111 2 |
| GR | 561 3 | 5169 3 | 561 8 | 5212 2 | 562 6 | 5268 1 | 563 7 | 5304 7 | 565 6 | 5351 4 |
| GR | 568 2 | 5385 8 | 570 0 | 5407 5 | 569 9 | 5427 7 | 575 3 | 5463 3 | 581 0 | 5506 3 |
| GR | 585 6 | 5536 2 | 590 7 | 5564 2 | 590 4 | 5582 1 | | | | |
| ET | | | 9 1 | | | 7 1 | 4714 | 5055 | 4714 0 | 5272 1 |
| X1 | 418 0 | 37 0 | 4973 0 | 5028 7 | 535 | 520 | 532 | | | |
| GR | 577 0 | 4346 4 | 573 7 | 4414 8 | 569 8 | 4496 3 | 567 4 | 4566 6 | 566 2 | 4641 9 |
| GR | 565 0 | 4698 7 | 563 2 | 4741 1 | 561 6 | 4781 4 | 558 8 | 4845 3 | 558 2 | 4906 8 |
| GR | 558 4 | 4950 8 | 558 4 | 4973 0 | 553 4 | 4977 7 | 552 4 | 4985 9 | 551 6 | 4991 6 |
| GR | 551 5 | 5000 0 | 551 5 | 5007 4 | 553 6 | 5016 1 | 557 2 | 5021 9 | 559 1 | 5028 7 |
| GR | 560 8 | 5048 3 | 563 6 | 5080 2 | 564 2 | 5131 4 | 564 0 | 5175 4 | 565 7 | 5240 8 |
| GR | 565 9 | 5268 1 | 579 1 | 5272 1 | 579 1 | 5305 3 | 567 3 | 5314 3 | 568 0 | 5351 6 |
| GR | 568 0 | 5374 1 | 569 9 | 5421 2 | 573 1 | 5450 0 | 573 1 | 5470 2 | 577 7 | 5500 3 |
| GR | 580 9 | 5529 8 | 585 7 | 5561 7 | | | | | | |
| ET | | | 9 1 | | | 7 1 | 4899 5 | 5237 3 | 4300 0 | 5335 4 |
| X1 | 420 0 | 54 0 | 4971 9 | 5014 8 | 400 | 505 | 432 | | | |
| GR | 591 3 | 4238 8 | 589 3 | 4269 3 | 586 1 | 4329 0 | 583 7 | 4400 2 | 580 6 | 4464 2 |
| GR | 576 8 | 4525 8 | 589 4 | 4545 1 | 586 2 | 4571 8 | 573 9 | 4599 1 | 572 1 | 4652 5 |
| GR | 569 7 | 4734 9 | 568 5 | 4812 6 | 567 8 | 4863 8 | 565 8 | 4913 9 | 563 7 | 4948 8 |
| GR | 561 8 | 4971 9 | 555 3 | 4976 9 | 552 7 | 4979 5 | 553 3 | 4988 3 | 552 9 | 4992 6 |
| GR | 552 7 | 5000 0 | 552 7 | 5009 6 | 556 4 | 5011 9 | 559 6 | 5014 8 | 560 5 | 5032 1 |
| GR | 560 9 | 5070 1 | 561 7 | 5101 2 | 561 8 | 5188 4 | 561 8 | 5209 2 | 565 4 | 5237 3 |
| GR | 566 8 | 5286 9 | 567 7 | 5335 4 | 567 1 | 5355 4 | 568 3 | 5361 8 | 568 2 | 5380 3 |
| GR | 566 4 | 5385 2 | 569 5 | 5389 9 | 567 8 | 5400 6 | 568 5 | 5449 9 | 578 2 | 5453 5 |
| GR | 578 0 | 5487 1 | 568 8 | 5494 9 | 577 5 | 5497 5 | 576 7 | 5531 5 | 568 3 | 5536 6 |

```
GR   568 1    5569 2    571 6     5585 3    565 6     5603 4    566 6     5618 9    572 6     5638 5
GR   574 6    5670 7    576 8     5709 3    579 8     5744 8    582 3     5785 6

QT   5        32600     18200     12200     2640      18200
ET                      9 1                         7 1       4821 5    5231      4500      5231
X1   422 0    30 0      4973 3    5022 1    252       285       262
GR   579 7    4493 3    577 4     4537 7    573 6     4616 1    570 2     4715 4    568 5     4795 6
GR   567 4    4863 8    565 7     4915 7    563 8     4940 3    561 1     4964 9    560 3     4973 3
GR   554 2    4977 7    553 5     4990 9    552 7     4993 8    552 6     5000 0    552 5     5005 0
GR   555 9    5011 2    560 4     5017 0    561 0     5022 1    561 6     5047 1    563 4     5074 9
GR   562 9    5121 1    562 9     5181 2    564 3     5224 7    568 0     5267 6    568 9     5283 1
GR   570 9    5300 1    570 8     5317 7    574 8     5351 1    578 7     5390 1    582 9     5423 8

NC                                3         5
ET                      9 1                         7 1       4814 6    5208      4600      5208
X1   428 0    29 0      4976 5    5071 5    70        60        62 4
GR   578 3    4520 8    575 3     4583 3    572 3     4655 3    569 8     4738 9    569 0     4803 2
GR   567 4    4865 3    566 0     4900 4    562 6     4939 3    560 2     4958 0    559 3     4976 5
GR   554 5    4984 8    553 0     4995 0    552 8     5000 0    552 8     5003 4    554 7     5011 0
GR   553 3    5018 5    555 3     5036 1    558 1     5054 5    562 8     5071 5    563 7     5096 4
GR   563 8    5137 6    563 8     5188 7    567 1     5228 8    571 5     5259 2    574 6     5279 7
GR   574 9    5299 5    574 2     5305 6    578 1     5311 7    580 0     5332 2

QT   5        32600     17940     12200     2640      17940
ET                      9 1                         7 1       4828      5204      4750      5204
        COUNTRY CLUB ROAD - DIP SECTION - CULVERT AREA 38 1 SQ FT
                MODELED AS SECTION OVER T O R  (W/O CULVERTS)
                100-YR FLOWRATE REDUCED BY 260 CFS TO ACCOUNT FOR CULVERT FLOW
X1   429      14        4962 2    5058 2    35        38        47
GR   571 1    4711 6    569 6     4778 8    568 0     4848 6    565 5     4898 8    562 6     4936 6
GR   561 6    4962 2    560 9     5000 0    561 3     5025 3    561 8     5058 2    562 7     5096 4
GR   563 6    5126 5    565 1     5169 3    568 0     5205 6    571 2     5230 6

NC    045     045       04
QT   5        32600     18200     12200     2640      18200
ET                      9 1                         7 1       4819      5182      4819 0    5182 0
X1   430 0    34 0      4971 0    5028 5    20        20        20
GR   582 3    4413 9    581 0     4447 0    578 2     4503 8    576 4     4536 1    574 4     4581 5
GR   572 2    4647 1    570 5     4728 9    569 1     4775 3    567 9     4814 1    566 0     4859 8
GR   563 6    4899 4    561 6     4940 5    560 0     4971 0    559 9     4971 1    557 7     4977 3
GR   557 1    4984 2    557 3     5000 0    557 7     5018 5    559 1     5022 0    560 2     5028 4
GR   560 3    5028 5    561 3     5046 6    562 7     5084 8    564 1     5126 3    565 6     5172 6
GR   569 4    5210 0    573 9     5229 8    576 5     5244 7    579 3     5268 0    580 0     5280 6
GR   579 7    5302 0    587 4     5317 9    581 0     5335 2    583 9     5368 5

NC                                1         3
ET                      9 1                         7 1       4816 5    5144      4816 5    5144 0
X1   432 0    29 0      4964 6    5040 4    48        42        44
GR   572 7    4604 2    571 6     4656 4    570 1     4720 9    569 3     4752 0    572 0     4764 9
GR   567 4    4774 4    567 8     4816 5    565 6     4864 4    565 3     4909 4    571 2     4924 4
GR   568 5    4940 7    563 4     4953 1    562 1     4964 6    561 0     4978 5    558 4     4984 3
GR   558 3    5000 0    558 2     5016 8    561 0     5031 1    564 4     5040 4    564 3     5052 6
GR   568 1    5095 9    569 2     5130 4    570 1     5166 8    575 0     5185 4    578 6     5201 3
GR   579 1    5223 6    578 3     5246 8    587 6     5264 6    595 9     5283 6
```

| | | | | | | | | | | |
|---|---|---|---|---|---|---|---|---|---|---|
| ET | | | 9 1 | | | 7 1 | 4845 | 5106 2 | 4845 | 5200 |
| X1 | 434 0 | 32 0 | 4978 0 | 5036 5 | 125 | 155 | 161 | | | |
| GR | 573 5 | 4629 4 | 570 2 | 4661 6 | 569 4 | 4693 1 | 570 6 | 4700 7 | 570 7 | 4718 9 |
| GR | 569 3 | 4726 4 | 568 5 | 4745 7 | 569 0 | 4757 5 | 569 6 | 4764 3 | 569 7 | 4778 0 |
| GR | 568 8 | 4794 7 | 568 9 | 4867 6 | 568 3 | 4919 6 | 567 2 | 4953 5 | 565 3 | 4978 0 |
| GR | 560 3 | 4982 8 | 557 9 | 4991 9 | 557 8 | 5000 0 | 557 8 | 5008 4 | 561 3 | 5021 1 |
| GR | 567 6 | 5036 5 | 568 6 | 5051 8 | 569 0 | 5074 0 | 569 8 | 5094 6 | 574 3 | 5112 3 |
| GR | 578 2 | 5120 1 | 578 4 | 5140 3 | 578 0 | 5155 4 | 576 3 | 5160 9 | 581 7 | 5176 4 |
| GR | 592 9 | 5189 1 | 604 1 | 5205 4 | | | | | | |
| ET | | | | | | 7 1 | 4944 9 | 5074 2 | | |
| X1 | 436 0 | 35 0 | 4963 3 | 5031 7 | 385 | 380 | 384 1 | | | |
| GR | 621 1 | 4658 4 | 612 4 | 4667 5 | 600 4 | 4688 4 | 592 1 | 4713 4 | 592 0 | 4733 3 |
| GR | 599 3 | 4756 3 | 596 6 | 4786 6 | 591 1 | 4830 0 | 587 9 | 4866 5 | 586 5 | 4909 0 |
| GR | 588 8 | 4921 1 | 580 3 | 4934 8 | 574 1 | 4944 9 | 571 1 | 4963 3 | 566 5 | 4973 9 |
| GR | 564 9 | 4987 6 | 563 7 | 4992 2 | 563 5 | 5000 0 | 563 4 | 5004 0 | 565 1 | 5012 5 |
| GR | 567 3 | 5031 7 | 567 1 | 5061 2 | 578 6 | 5077 4 | 586 7 | 5091 6 | 587 1 | 5107 4 |
| GR | 584 3 | 5118 3 | 594 6 | 5132 1 | 592 5 | 5144 9 | 591 3 | 5176 5 | 594 2 | 5194 0 |
| GR | 594 6 | 5200 4 | 611 4 | 5212 7 | 617 4 | 5231 6 | 620 0 | 5246 1 | 621 5 | 5268 5 |
| ET | | | | | | 7 1 | 4900 | 5130 3 | | |
| X1 | 438 0 | 31 0 | 4937 9 | 5074 2 | 375 | 373 | 383 | | | |
| GR | 631 9 | 4761 9 | 625 8 | 4788 0 | 613 8 | 4824 9 | 599 1 | 4850 5 | 580 9 | 4882 1 |
| GR | 574 9 | 4912 7 | 571 7 | 4937 9 | 570 6 | 4960 3 | 568 6 | 4977 6 | 565 7 | 4987 3 |
| GR | 564 5 | 4992 5 | 564 4 | 5000 0 | 564 5 | 5001 9 | 567 1 | 5011 7 | 569 3 | 5053 5 |
| GR | 573 0 | 5074 2 | 572 9 | 5088 6 | 571 6 | 5106 3 | 576 3 | 5124 1 | 588 4 | 5138 7 |
| GR | 597 0 | 5151 6 | 601 4 | 5162 9 | 599 4 | 5171 4 | 598 7 | 5184 9 | 598 0 | 5197 5 |
| GR | 602 6 | 5201 7 | 611 9 | 5211 4 | 616 3 | 5228 4 | 622 0 | 5251 5 | 625 2 | 5262 8 |
| GR | 635 9 | 5292 3 | | | | | | | | |
| ET | | | | | | 7 1 | 4929 7 | 5041 4 | | |
| X1 | 440 0 | 25 0 | 4926 0 | 5045 9 | 650 | 630 | 661 0 | | | |
| GR | 617 7 | 4792 2 | 613 3 | 4812 4 | 607 2 | 4841 8 | 601 0 | 4866 5 | 590 1 | 4890 5 |
| GR | 587 9 | 4908 4 | 585 5 | 4926 0 | 579 8 | 4941 7 | 575 9 | 4958 4 | 572 0 | 4975 0 |
| GR | 570 7 | 4986 2 | 570 6 | 5000 0 | 570 6 | 5006 9 | 572 2 | 5020 5 | 578 7 | 5035 0 |
| GR | 588 0 | 5045 9 | 593 9 | 5057 8 | 597 5 | 5063 3 | 599 8 | 5071 2 | 599 0 | 5075 0 |
| GR | 599 3 | 5099 4 | 606 0 | 5110 3 | 617 0 | 5124 0 | 624 9 | 5141 0 | 635 3 | 5162 6 |
| ET | | | | | | 7 1 | 4919 7 | 5145 8 | | |
| X1 | 442 0 | 36 0 | 4965 5 | 5027 7 | 730 | 625 | 710 | | | |
| GR | 628 5 | 4868 5 | 620 9 | 4891 6 | 605 7 | 4913 8 | 596 5 | 4927 9 | 594 0 | 4942 5 |
| GR | 594 0 | 4957 3 | 595 6 | 4965 5 | 587 9 | 4979 2 | 584 3 | 4988 0 | 582 8 | 4994 4 |
| GR | 582 7 | 5000 0 | 582 7 | 5004 9 | 587 0 | 5010 4 | 591 3 | 5018 9 | 596 2 | 5027 7 |
| GR | 598 6 | 5042 5 | 600 3 | 5073 1 | 601 1 | 5107 6 | 601 5 | 5142 2 | 603 2 | 5159 7 |
| GR | 607 8 | 5173 7 | 609 0 | 5194 4 | 605 3 | 5212 1 | 606 2 | 5229 8 | 612 7 | 5244 6 |
| GR | 620 0 | 5255 0 | 620 0 | 5282 6 | 619 0 | 5294 8 | 621 5 | 5302 0 | 631 5 | 5315 2 |
| GR | 640 9 | 5344 6 | 650 0 | 5364 7 | 661 2 | 5388 7 | 662 6 | 5401 8 | 669 8 | 5417 1 |
| GR | 677 5 | 5436 5 | | | | | | | | |

```
ET                      9 1                          7 1       4916 9    5035      4915 0    5055 8
X1   444 0   28 0       4959 9    5033 1    630       515       592
GR   612 3   4791 3     612 2     4802 3    596 1     4824 9    607 6     4832 9    613 4     4852 7
GR   613 1   4915 0     596 1     4919 4    595 9     4941 9    595 5     4959 9    587 1     4969 7
GR   585 4   4980 2     584 3     4993 3    584 2     5000 0    584 2     5005 4    587 1     5014 0
GR   589 1   5023 4     593 5     5033 1    614 4     5036 3    616 3     5055 8    603 9     5060 1
GR   621 5   5084 4     620 4     5135 5    606 3     5141 6    608 9     5157 0    608 5     5179 7
GR   614 6   5190 2     618 3     5204 7    627 9     5223 1

ET                      9 1                          7 1       4865      5170      4865 0    5240 0
X1   446 0   26 0       4965 3    5035 2    150       185       171
GR   630 1   4703 8     623 7     4716 1    615 6     4742 8    601 1     4765 2    597 1     4769 2
GR   596 8   4807 6     596 8     4836 9    596 4     4877 6    596 4     4929 5    596 3     4950 9
GR   594 6   4965 3     586 0     4979 4    584 9     4992 2    584 8     5000 0    584 8     5008 7
GR   589 3   5018 6     601 1     5035 2    601 3     5047 7    602 2     5084 2    602 6     5122 2
GR   606 8   5135 3     607 3     5187 7    607 7     5202 3    620 6     5223 4    632 8     5237 9
GR   638 7   5248 0

NC                                3         5
ET                      9 1                          7 1       4850      5139 3    4850      5200
X1   448 0   29 0       4936 2    5048 8    68        110       84 6
GR   633 3   4655 1     626 7     4670 4    619 8     4701 5    610 3     4711 5    597 9     4730 6
GR   596 9   4753 3     596 8     4786 0    608 4     4792 1    608 4     4831 2    596 9     4837 3
GR   596 6   4877 6     595 2     4905 7    593 2     4936 2    589 6     4954 5    586 7     4975 9
GR   584 7   4986 6     584 5     5000 0    584 4     5013 6    593 4     5042 6    600 5     5048 8
GR   601 7   5059 5     607 2     5111 1    606 9     5137 3    614 5     5157 2    617 8     5171 0
GR   628 6   5193 7     641 6     5210 7    640 2     5228 2    639 7     5253 5

ET                      9 1                          7 1       4860      5153 2    4860 0    5200 0
        PRIVATE ROAD - DIP SECTION WITH STEEL GRATING BRIDGE
                MODELED AS SECTION OVER T O R  USING ORIGINAL T O R  POINTS
                EXCEPT AT GRATING WHERE GRATING IS IGNORED AND CHANNEL
                BOTTOM IS SHOWN IN 6-FOOT WIDE SECTION
X1   449     26         4930 8    5035 8    20        38        37
GR   621 2   4718 3     607 3     4739 9    597 7     4763 4    604 3     4799 9    597 1     4844 0
GR   597 3   4887 2     597 1     4909 2    595 5     4930 8    591 3     4950 2    589 7     4974 1
GR   588 1   4987 4     588 0     4996 4    588 0     4997 0    586 0     4997 1    586 0     5000 0
GR   586 0   5002 9     588 0     5003 0    587 9     5005 2    589 0     5019 5    591 1     5035 8
GR   594 6   5057 3     598 8     5070 5    607 6     5141 8    607 7     5159 5    617 0     5188 1
GR   623 8   5205 2

ET                      9 1                          7 1       4860      5175      4860 0    5250 0
X1   450 0   33 0       4930 8    5035 8    43        42        49
GR   644 7   4623 9     632 9     4649 8    627 4     4661 5    640 6     4663 4    629 3     4685 8
GR   621 2   4718 3     607 3     4739 9    597 5     4763 4    597 5     4799 9    597 1     4844 0
GR   597 3   4887 2     597 1     4909 2    595 5     4930 8    595 4     4930 9    589 8     4950 2
GR   589 7   4974 1     587 0     4987 4    586 1     4996 4    586 1     5000 0    586 8     5005 2
GR   589 0   5019 5     590 7     5035 7    590 8     5035 8    592 1     5057 3    598 0     5070 5
GR   602 0   5141 8     606 9     5159 5    608 1     5188 1    613 6     5205 2    619 1     5223 5
GR   629 9   5252 2     641 0     5268 0    641 1     5293 5
```

| | | | | | | | | | | |
|---|---|---|---|---|---|---|---|---|---|---|
| NC | | | | 1 | 3 | | | | | |
| ET | | | 9 1 | | | 7 1 | 4872 | 5195 | 4872 | 5300 |
| X1 | 452 0 | 33 0 | 4951 7 | 5064 4 | 72 | 115 | 86 | | | |
| GR | 645 6 | 4674 6 | 637 1 | 4695 0 | 634 0 | 4706 9 | 634 0 | 4722 0 | 623 3 | 4754 9 |
| GR | 611 5 | 4783 6 | 603 3 | 4814 6 | 598 5 | 4846 3 | 597 1 | 4874 3 | 597 2 | 4896 2 |
| GR | 597 7 | 4918 8 | 595 8 | 4928 8 | 593 7 | 4951 7 | 590 1 | 4973 4 | 588 6 | 4988 1 |
| GR | 586 7 | 4993 9 | 586 3 | 5000 0 | 586 3 | 5004 1 | 588 0 | 5014 2 | 591 6 | 5051 5 |
| GR | 594 3 | 5064 4 | 596 0 | 5083 6 | 598 7 | 5116 0 | 600 4 | 5141 1 | 602 4 | 5175 0 |
| GR | 602 7 | 5209 5 | 611 2 | 5228 5 | 612 1 | 5239 0 | 611 9 | 5254 6 | 623 8 | 5276 4 |
| GR | 633 8 | 5297 9 | 644 8 | 5312 0 | 655 3 | 5331 6 | | | | |
| ET | | | | | | 7 1 | 4924 2 | 5200 | | |
| X1 | 454 0 | 29 0 | 4971 2 | 5126 0 | 230 | 260 | 254 | | | |
| GR | 655 2 | 4620 9 | 650 1 | 4656 5 | 642 4 | 4725 8 | 635 2 | 4769 2 | 626 8 | 4832 1 |
| GR | 620 4 | 4876 1 | 613 4 | 4900 2 | 607 7 | 4925 5 | 603 1 | 4938 4 | 597 3 | 4953 0 |
| GR | 597 8 | 4965 0 | 596 6 | 4971 2 | 589 2 | 4981 7 | 586 7 | 4991 4 | 586 5 | 5000 0 |
| GR | 586 5 | 5005 3 | 589 2 | 5026 8 | 591 8 | 5058 7 | 589 8 | 5091 6 | 590 4 | 5109 9 |
| GR | 595 8 | 5126 0 | 598 7 | 5147 7 | 605 0 | 5200 3 | 614 3 | 5259 8 | 618 6 | 5284 5 |
| GR | 624 7 | 5302 9 | 624 8 | 5328 3 | 632 1 | 5335 9 | 643 1 | 5362 5 | | |
| ET | | | 9 1 | | | 7 1 | 4915 | 5195 9 | 4870 5 | 5300 |
| X1 | 456 0 | 34 0 | 4951 8 | 5073 8 | 450 | 300 | 420 | | | |
| GR | 640 1 | 4360 1 | 639 7 | 4394 6 | 639 8 | 4424 1 | 641 3 | 4465 2 | 647 7 | 4548 6 |
| GR | 645 7 | 4668 7 | 645 2 | 4724 6 | 639 6 | 4774 7 | 621 4 | 4822 3 | 612 4 | 4850 5 |
| GR | 606 0 | 4865 3 | 613 2 | 4870 5 | 611 8 | 4901 4 | 602 7 | 4905 5 | 601 5 | 4937 0 |
| GR | 597 8 | 4951 8 | 592 0 | 4967 7 | 589 6 | 4987 1 | 587 8 | 4994 4 | 587 4 | 5000 0 |
| GR | 587 3 | 5003 8 | 589 1 | 5011 3 | 592 7 | 5055 2 | 594 6 | 5073 8 | 596 9 | 5100 6 |
| GR | 601 5 | 5158 3 | 606 0 | 5185 2 | 612 8 | 5218 8 | 620 7 | 5244 7 | 626 7 | 5275 2 |
| GR | 630 4 | 5288 8 | 629 9 | 5318 5 | 637 3 | 5323 4 | 649 1 | 5353 7 | | |
| ET | | | 9 1 | | | 7 1 | 4835 | 5100 | 4833 | 5200 |
| X1 | 458 0 | 30 0 | 4924 9 | 5042 1 | 371 | 340 | 366 | | | |
| GR | 636 8 | 4569 7 | 630 8 | 4606 4 | 624 6 | 4645 3 | 621 3 | 4671 0 | 618 6 | 4692 2 |
| GR | 614 7 | 4735 7 | 610 2 | 4760 6 | 609 8 | 4773 8 | 603 6 | 4815 0 | 600 7 | 4871 4 |
| GR | 599 8 | 4893 6 | 596 8 | 4924 9 | 593 6 | 4947 9 | 590 7 | 4974 3 | 590 3 | 4983 3 |
| GR | 588 6 | 4992 8 | 588 4 | 5000 0 | 588 4 | 5005 6 | 590 7 | 5013 9 | 593 5 | 5033 1 |
| GR | 598 9 | 5042 1 | 598 8 | 5058 7 | 605 3 | 5091 8 | 611 9 | 5121 6 | 615 9 | 5153 3 |
| GR | 622 7 | 5170 9 | 623 9 | 5198 4 | 630 8 | 5209 1 | 638 4 | 5232 2 | 644 8 | 5251 4 |
| ET | | | | | | 7 1 | 4934 5 | 5085 5 | | |
| X1 | 460 0 | 25 0 | 4929 9 | 5094 7 | 430 | 410 | 403 | | | |
| GR | 625 8 | 4626 0 | 623 5 | 4659 9 | 623 6 | 4693 6 | 621 5 | 4698 4 | 616 2 | 4719 9 |
| GR | 613 6 | 4722 6 | 612 5 | 4757 3 | 613 1 | 4781 3 | 612 2 | 4820 8 | 612 1 | 4871 4 |
| GR | 611 0 | 4908 7 | 610 7 | 4929 9 | 600 4 | 4951 6 | 589 8 | 4978 8 | 589 7 | 5000 0 |
| GR | 590 2 | 5007 7 | 591 8 | 5033 3 | 594 6 | 5064 6 | 604 3 | 5078 9 | 614 3 | 5094 7 |
| GR | 614 0 | 5119 0 | 616 9 | 5134 3 | 620 7 | 5150 7 | 626 3 | 5167 4 | 630 9 | 5181 7 |
| ET | | | 9 1 | | | 7 1 | 4918 1 | 5123 6 | 4844 | 5200 |
| X1 | 462 0 | 27 0 | 4922 8 | 5123 6 | 200 | 370 | 277 | | | |
| GR | 623 6 | 4627 2 | 619 4 | 4644 4 | 616 9 | 4664 5 | 613 5 | 4674 8 | 612 1 | 4703 9 |
| GR | 612 6 | 4741 7 | 611 1 | 4787 8 | 611 6 | 4844 5 | 610 7 | 4889 1 | 610 8 | 4915 0 |
| GR | 607 4 | 4922 8 | 599 4 | 4934 1 | 594 2 | 4947 8 | 593 2 | 4977 5 | 592 3 | 4994 2 |
| GR | 592 2 | 5000 0 | 592 1 | 5005 0 | 593 1 | 5042 6 | 596 6 | 5070 2 | 600 8 | 5097 9 |

```
GR   606 0    5123 6    608 9     5143 9    613 7     5158 3    614 9     5177 6    618 3     5211 9
GR   620 9    5228 4    626 5     5261 0

NC    05       04        038       1         3
QT   5        32400     18100     12100     2630      18100
ET                                                     7 1       4930      5160
X1   464 0    27 0      4942 8    5149 9    395       615       473
GR   627 7    4531 0    623 8     4549 9    626 6     4598 5    632 5     4654 0    627 0     4731 8
GR   625 3    4768 3    619 5     4812 7    613 4     4897 6    606 9     4942 8    603 1     4963 4
GR   596 3    4987 5    594 7     4991 9    594 6     5000 0    594 6     5010 2    595 4     5027 1
GR   598 6    5059 5    601 2     5081 6    602 3     5107 8    597 4     5125 8    600 8     5138 3
GR   605 5    5149 9    607 9     5174 4    614 8     5220 6    620 3     5247 8    622 4     5292 2
GR   624 0    5337 0    626 3     5371 7

ET                                                     7 1       4919 3    5220      4300      5229 8
        BASE CASE FOR FLOODWAY FOLLOWS THE NO LEVEE CONDITION FROM SECTIONS
                466 TO U/S LIMIT OF STUDY
X1   466 0    32 0      4919 3    5229 8    340       370       365
GR   650 6    4274 7    645 6     4319 0    643 2     4372 0    641 3     4437 6    641 5     4488 1
GR   638 4    4557 4    634 0     4618 6    631 3     4658 0    627 1     4710 5    619 6     4767 7
GR   615 7    4813 7    614 1     4865 0    612 3     4900 1    610 8     4919 3    603 8     4936 3
GR   602 6    4972 0    599 3     4988 9    599 3     5000 0    599 2     5008 2    600 9     5022 9
GR   603 1    5062 8    599 3     5087 0    598 7     5101 3    607 0     5126 0    609 2     5166 6
GR   609 7    5206 6    613 8     5229 8    610 0     5248 5    609 8     5280 3    611 0     5331 2
GR   614 5    5382 0    619 3     5428 9

ET                                                     7 1       4910      5290      4895      5306 0
X1   468 0    25 0      4931 5    5306      475       365       425
GR   610 3    4895      610 3     4895 1    610 3     4895 2    610 3     4895 3    610 4     4931 5
GR   609 9    4969 6    609 3     4988 9    602 2     4992 0    599 8     4993 8    599 8     5000 0
GR   599 8    5006 1    601 8     5026 2    603 9     5104 4    600 6     5125 9    601 0     5138 6
GR   605 5    5153 6    606 1     5188 1    604 3     5234 9    609 3     5260 3    615 7     5299 9
GR   615 9    5306 0    610 8     5321 6    611 9     5360 8    614 2     5404 9    617 3     5456 2

ET                                                     7 1       4840      5190      4812 6    5189 4
X1   468 2    33 0      4812 6    5189 4    330       220       305
GR   616 5    4812 6    616 4     4826 3    614 1     4838 8    611 3     4865 1    610 1     4899 4
GR   609 1    4920 6    602 8     4932 9    601 2     4960 5    600 5     4979 4    599 9     4991 2
GR   599 9    5000 0    599 9     5003 7    601 8     5008 0    604 0     5015 9    604 8     5051 9
GR   604 8    5103 9    604 2     5155 1    608 0     5166 9    614 0     5179 6    616 4     5189 4
GR   616 2    5195 9    612 3     5205 0    610 6     5213 3    611 1     5233 3    612 9     5287 8
GR   615 8    5352 2    617 2     5390 6    619 9     5447 8    622 6     5496 3    624 2     5530 1
GR   627 4    5574 9    629 2     5617 9    629 7     5652 2

ET                                                     7 1       4950 9    5381 7    4918 1    5323 3
        CHANNEL ENTERS CITY OF ESCONDIDO
X1   470 0    17 0      4918 1    5323 3    190       140       210
GR   622 7    4918 1    617 6     4936 3    617 4     4950 9    612 8     4972 8    604 9     4983 8
GR   599 9    4991 2    599 9     5000 0    599 8     5012 4    602 9     5041 0    605 4     5076 3
GR   606 1    5114 0    611 2     5164 5    611 2     5231 8    605 1     5264 3    611 9     5294 0
GR   617 0    5312 1    617 2     5323 3
```

```
ET                                                  7 1       4930      5408      4735 1    5671 8
      THIS SECTION WAS ADDED TO MATCH THE CONTROL SECTION IN THE PREVIOUS
              FIS DONE BY DWR (SECTION 80605)
X1   470 2    38 0      4884 7    5296 7    210       150       185
GR   622 5    4734 8    622 5     4734 9    622 5     4735      622 5     4735 1    615 5     4762 0
GR   610 2    4783 8    610 4     4826 9    620 3     4860 4    622 8     4884 7    622 2     4896 4
GR   617 5    4909 6    617 8     4916 6    617 5     4932 1    610 9     4946 1    603 3     4969 9
GR   600 2    4986 9    600 0     5000 0    599 9     5013 7    602 4     5027 8    606 2     5046 7
GR   611 3    5083 0    614 7     5128 0    613 9     5181 2    614 9     5251 4    614 7     5282 9
GR   617 7    5296 7    617 7     5311 3    607 7     5332 9    604 5     5353 6    605 3     5382 9
GR   608 0    5408 0    614 6     5438 9    616 9     5479 3    619 3     5523 2    619 9     5535 3
GR   623 7    5582 2    626 9     5626 2    628 9     5671 8

ET                                                  7 1       4885 7    5401 7    4520 1    5647 5
X1   472 0    43 0      4885 7    5268 2    200       120       185
GR   616 9    4520      616 9     4520 1    615 5     4560 9    614 5     4617 1    633 7     4634 0
GR   633 9    4668 9    613 9     4684 0    636 9     4696 1    636 9     4752 3    614 8     4757 2
GR   613 2    4800 9    613 8     4850 1    610 1     4860 8    618 2     4871 7    618 3     4885 7
GR   611 6    4900 1    606 0     4920 1    606 8     4946 7    605 9     4956 7    601 8     4969 1
GR   600 6    4987 7    600 6     5000 0    600 6     5009 3    603 9     5020 3    608 7     5028 3
GR   610 5    5035 9    611 2     5054 7    611 7     5092 8    613 0     5139 8    614 2     5173 9
GR   617 2    5235 1    617 3     5268 2    614 5     5295 5    608 4     5332 0    605 2     5358 8
GR   604 8    5384 6    608 8     5401 7    613 6     5426 6    614 8     5450 6    616 3     5502 7
GR   619 5    5553 7    622 1     5600 7    623 9     5647 5

QT   5        32000     18000     12000     2600      18000
ET                                                  7 1       4800      5355 3    4801 3    5179 9
X1   474 0    68 0      4801 3    5179 9    448       448       443
GR   633 0    3773 5    632 2     3792 4    634 0     3823 9    632 7     3855 6    630 9     3905 9
GR   629 9    3951 2    628 4     4000 0    626 2     4042 4    624 5     4091 4    622 1     4120 0
GR   620 4    4171 1    619 5     4223 6    619 0     4262 6    618 7     4295 8    617 8     4334 7
GR   618 3    4364 3    618 1     4412 5    617 9     4445 2    616 6     4498 9    615 8     4560 8
GR   615 3    4639 8    615 0     4677 5    615 2     4695 9    613 9     4765 6    613 9     4775 4
GR   619 6    4791 9    619 6     4801 3    610 2     4822 0    607 4     4837 2    608 2     4874 3
GR   608 5    4921 9    607 7     4964 1    605 6     4973 1    601 5     4981 4    601 1     4991 4
GR   601 1    5000 0    601 1     5006 0    601 5     5022 6    605 5     5034 9    612 2     5042 6
GR   612 2    5074 8    616 8     5109 1    616 2     5144 1    617 7     5158 8    619 2     5169 8
GR   619 8    5179 9    614 1     5197 2    612 8     5219 7    608 8     5263 0    607 5     5306 4
GR   608 9    5329 2    613 4     5355 3    615 0     5396 4    616 2     5427 8    618 4     5481 1
GR   619 2    5510 7    620 2     5561 7    620 9     5602 5    622 9     5617 0    623 9     5661 7
GR   625 1    5708 4    626 6     5765 9    628 2     5814 9    628 4     5840 6    627 8     5860 3
GR   629 7    5869 1    630 9     5935 1    631 1     5964 4

ET                                                  7 1       4830      5206 8    4826 9    5102 7
      U/S LIMIT OF STUDY
X1   476 0    66 0      4826 9    5102 7    472       465       467
GR   640 8    3986 5    639 5     4011 5    636 8     4028 9    636 4     4070 8    636 6     4122 7
GR   635 8    4149 0    640 3     4168 5    640 7     4193 5    636 0     4215 8    637 1     4257 9
GR   641 8    4268 7    641 2     4325 6    635 2     4363 8    634 7     4385 3    635 0     4418 9
GR   634 7    4456 8    630 4     4477 4    629 7     4494 0    625 1     4505 5    623 1     4548 6
GR   620 9    4596 9    619 4     4624 4    616 5     4670 8    615 9     4731 0    616 3     4763 1
GR   615 5    4800 2    620 8     4812 0    621 1     4826 9    616 4     4856 1    615 8     4884 1
GR   609 6    4911 6    605 9     4925 4    605 4     4943 5    604 9     4975 2    601 8     4986 3
```

| | | | | | | | | | | |
|---|---|---|---|---|---|---|---|---|---|---|
| GR | 601 2 | 4991 1 | 601 2 | 5000 0 | 601 3 | 5006 6 | 601 8 | 5021 0 | 604 9 | 5032 2 |
| GR | 609 9 | 5047 4 | 610 6 | 5067 6 | 616 9 | 5092 0 | 621 3 | 5102 7 | 621 3 | 5113 3 |
| GR | 613 3 | 5128 5 | 610 7 | 5134 3 | 611 0 | 5168 8 | 614 5 | 5206 8 | 617 1 | 5241 2 |
| GR | 618 9 | 5272 4 | 619 9 | 5317 3 | 620 3 | 5367 8 | 621 7 | 5419 6 | 621 6 | 5460 2 |
| GR | 621 3 | 5514 2 | 620 8 | 5576 0 | 620 8 | 5609 7 | 622 2 | 5670 2 | 621 6 | 5720 9 |
| GR | 622 4 | 5744 5 | 621 2 | 5764 7 | 622 5 | 5778 7 | 622 5 | 5794 9 | 623 5 | 5837 5 |
| GR | 625 0 | 5868 5 | | | | | | | | |

| | | | | | | | | | |
|---|---|---|---|---|---|---|---|---|---|
| SECNO | DEPTH | CWSEL | CRIWS | WSELK | EG | HV | HL | OLOSS | L-BANK ELEV |
| Q | QLOB | QCH | QROB | ALOB | ACH | AROB | VOL | TWA | R-BANK ELEV |
| TIME | VLOB | VCH | VROB | XNL | XNCH | XNR | WTN | ELMIN | SSTA |
| SLOPE | XLOBL | XLCH | XLOBR | ITRIAL | IDC | ICONT | CORAR | TOPWID | ENDST |

*PROF 1

CCHV= 100 CEHV= 300
*SECNO 400 000
3720 CRITICAL DEPTH ASSUMED
D/S LIMIT OF STUDY
STARTING WATER SURFACE ELEVATIONS ARE NORMAL DEPTH FOR BASE CASE
AND NORMAL DEPTH PLUS ONE FOOT FOR FLOODWAY,
SINCE PROFILE CONCURRENCE AT D/S LIMIT OF STUDY REQUIRES
SIGNIFICANT BACKWATER IN FIRST SEVERAL SECTIONS
FLOODWAY CONSISTS OF EXISTING DELINEATION WITH MODIFICATIONS
FLOODWAY IS EXPANDED WHERE REQUIRED DUE TO HIGH VELOCITY
CONDITIONS OUTSIDE EXISTING FLOODWAY
FLOODWAY IS MADE NARROWER ONLY WHERE EXISTING FLOODWAY EXCEEDS
LIMITS OF 100-YR EFFECTIVE FLOW BOUNDARY THE NARROWER
DELINEATION APPEARS ONLY IN THE DECK FOR SAKE OF COMPUTATION,
THE CHANGE WILL NOT APPEAR ON THE MAP
SEE TABLE IN BACKUP MATERIAL FOR SECTIONS AFFECTED

| | | | | | | | | | |
|---|---|---|---|---|---|---|---|---|---|
| 400 000 | 11 63 | 538 33 | 538 33 | 543 00 | 541 57 | 3 23 | 00 | 00 | 530 00 |
| 18700 0 | 3152 0 | 11082 5 | 4465 5 | 289 7 | 677 8 | 399 6 | 0 | 0 | 530 10 |
| 00 | 10 88 | 16 35 | 11 17 | 045 | 040 | 040 | 000 | 526 70 | 4902 94 |
| 009438 | 0 | 0 | 0 | 0 | 16 | 0 | 00 | 205 51 | 5108 45 |

FLOW DISTRIBUTION FOR SECNO= 400 00 CWSEL= 538 33

| STA= | 4903 | 4916 | 4942 | 4956 | 5025 | 5042 | 5056 | 5070 | 5095 | 5108 |
|---|---|---|---|---|---|---|---|---|---|---|
| PER Q= | 7 | 8 4 | 7 8 | 59 3 | 10 1 | 5 1 | 3 3 | 4 6 | 7 | |
| AREA= | 25 5 | 151 8 | 112 4 | 677 8 | 133 9 | 80 4 | 63 4 | 97 0 | 24 9 | |
| VEL= | 4 9 | 10 4 | 12 9 | 16 4 | 14 2 | 12 0 | 9 7 | 8 8 | 5 3 | |
| DEPTH= | 2 0 | 5 9 | 8 1 | 9 7 | 7 8 | 6 1 | 4 4 | 3 8 | 1 9 | |

*SECNO 402 000
7185 MINIMUM SPECIFIC ENERGY
3720 CRITICAL DEPTH ASSUMED

| | | | | | | | | | |
|---|---|---|---|---|---|---|---|---|---|
| 402 000 | 12 31 | 542 11 | 542 11 | 00 | 545 56 | 3 45 | 2 81 | 07 | 534 60 |
| 18700 0 | 923 4 | 15164 0 | 2612 6 | 102 2 | 950 3 | 285 5 | 9 5 | 1 4 | 535 10 |
| 01 | 9 03 | 15 96 | 9 15 | 045 | 040 | 040 | 000 | 529 80 | 4931 03 |
| 009026 | 310 | 305 | 300 | 4 | 8 | 0 | 00 | 194 84 | 5125 87 |

| | | | | | | | | | |
|---|---|---|---|---|---|---|---|---|---|
| SECNO | DEPTH | CWSEL | CRIWS | WSELK | EG | HV | HL | OLOSS | L-BANK ELEV |
| Q | QLOB | QCH | QROB | ALOB | ACH | AROB | VOL | TWA | R-BANK ELEV |
| TIME | VLOB | VCH | VROB | XNL | XNCH | XNR | WTN | ELMIN | SSTA |
| SLOPE | XLOBL | XLCH | XLOBR | ITRIAL | IDC | ICONT | CORAR | TOPWID | ENDST |

FLOW DISTRIBUTION FOR SECNO= 402 00 CWSEL= 542 11

| STA= | 4931 | 4942 | 4955 | 5052 | 5061 | 5075 | 5087 | 5101 | 5118 | 5126 |
|---|---|---|---|---|---|---|---|---|---|---|
| PER Q= | 8 | 4 2 | 81 1 | 3 2 | 3 1 | 2 3 | 3 0 | 2 2 | | 2 |
| AREA= | 27 1 | 75 1 | 950 3 | 54 0 | 59 9 | 47 9 | 61 2 | 53 9 | | 8 6 |
| VEL= | 5 3 | 10 4 | 16 0 | 11 2 | 9 6 | 9 0 | 9 0 | 7 8 | | 3 6 |
| DEPTH= | 2 4 | 6 2 | 9 7 | 5 8 | 4 5 | 4 1 | 4 1 | 3 3 | | 1 1 |

*SECNO 404 000

3301 HV CHANGED MORE THAN HVINS

| | | | | | | | | | |
|---|---|---|---|---|---|---|---|---|---|
| 404 000 | 13 37 | 546 37 | 00 | 00 | 548 60 | 2 23 | 2 93 | 12 | 544 30 |
| 18700 0 | 27 2 | 16855 4 | 1817 4 | 10 6 | 1365 9 | 221 2 | 23 2 | 3 3 | 540 40 |
| 02 | 2 56 | 12 34 | 8 21 | 045 | 040 | 040 | 000 | 533 00 | 4886 96 |
| 005849 | 450 | 409 | 390 | 2 | 0 | 0 | 00 | 205 19 | 5092 15 |

FLOW DISTRIBUTION FOR SECNO= 404 00 CWSEL= 546 37

| STA= | 4887 | 4897 | 5046 | 5058 | 5085 | 5092 |
|---|---|---|---|---|---|---|
| PER Q= | 1 | 90 1 | 3 0 | 6 2 | | 4 |
| AREA= | 10 6 | 1365 9 | 64 6 | 139 1 | | 17 5 |
| VEL= | 2 6 | 12 3 | 8 8 | 8 4 | | 4 6 |
| DEPTH= | 1 0 | 9 2 | 5 5 | 5 1 | | 2 6 |

*SECNO 406 000

3301 HV CHANGED MORE THAN HVINS

3302 WARNING CONVEYANCE CHANGE OUTSIDE OF ACCEPTABLE RANGE, KRATIO = 1 91

CHANNEL CENTERLINE AT 5138 9

| | | | | | | | | | |
|---|---|---|---|---|---|---|---|---|---|
| 406 000 | 12 47 | 549 67 | 00 | 00 | 550 25 | 59 | 1 48 | 16 | 541 50 |
| 18700 0 | 11527 0 | 7118 1 | 54 9 | 2035 0 | 1034 5 | 30 6 | 52 3 | 6 9 | 547 00 |
| 04 | 5 66 | 6 88 | 1 80 | 045 | 040 | 040 | 000 | 537 20 | 4816 29 |
| 001610 | 555 | 528 | 520 | 2 | 0 | 0 | 00 | 388 17 | 5204 46 |

| | | | | | | | | | |
|---|---|---|---|---|---|---|---|---|---|
| SECNO | DEPTH | CWSEL | CRIWS | WSELK | EG | HV | HL | OLOSS | L-BANK ELEV |
| Q | QLOB | QCH | QROB | ALOB | ACH | AROB | VOL | TWA | R-BANK ELEV |
| TIME | VLOB | VCH | VROB | XNL | XNCH | XNR | WTN | ELMIN | SSTA |
| SLOPE | XLOBL | XLCH | XLOBR | ITRIAL | IDC | ICONT | CORAR | TOPWID | ENDST |

FLOW DISTRIBUTION FOR SECNO= 406 00 CWSEL= 549 67

| STA= | 4816 | 4824 | 4871 | 4887 | 4915 | 4970 | 4984 | 5000 | 5010 | 5023 | 5080 | 5182 | 5204 |
|---|---|---|---|---|---|---|---|---|---|---|---|---|---|
| PER Q= | 0 | 1 7 | 2 0 | 5 8 | 14 8 | 4 7 | 6 5 | 4 3 | 5 2 | 16 8 | 38 1 | 3 | |
| AREA= | 5 1 | 123 0 | 89 3 | 211 0 | 490 9 | 141 6 | 180 4 | 114 6 | 146 2 | 532 8 | 1034 5 | 30 6 | |
| VEL= | 1 0 | 2 5 | 4 1 | 5 1 | 5 7 | 6 2 | 6 8 | 7 0 | 6 6 | 5 9 | 6 9 | 1 8 | |
| DEPTH= | 6 | 2 7 | 5 5 | 7 6 | 8 8 | 10 1 | 11 6 | 12 1 | 11 2 | 9 4 | 10 1 | 1 3 | |

*SECNO 408 000

3302 WARNING CONVEYANCE CHANGE OUTSIDE OF ACCEPTABLE RANGE, KRATIO = 66

| | | | | | | | | | |
|---|---|---|---|---|---|---|---|---|---|
| 408 000 | 11 47 | 550 27 | 00 | 00 | 551 30 | 1 02 | 91 | 13 | 544 80 |
| 18700 0 | 8751 1 | 9948 2 | 8 | 1230 8 | 1116 8 | 9 | 76 7 | 10 4 | 549 80 |
| 05 | 7 11 | 8 91 | 87 | 045 | 040 | 040 | 000 | 538 80 | 4711 75 |
| 003685 | 400 | 378 | 365 | 2 | 0 | 0 | 00 | 372 64 | 5084 39 |

FLOW DISTRIBUTION FOR SECNO= 408 00 CWSEL= 550 27

| STA= | 4712 | 4739 | 4785 | 4801 | 4821 | 4840 | 4940 | 5081 | 5084 |
|---|---|---|---|---|---|---|---|---|---|
| PER Q= | 1 | 2 3 | 1 7 | 2 7 | 6 3 | 33 6 | 53 2 | 0 | |
| AREA= | 17 4 | 117 2 | 63 3 | 91 3 | 153 3 | 788 3 | 1116 8 | 9 | |
| VEL= | 1 5 | 3 7 | 5 0 | 5 6 | 7 7 | 8 0 | 8 9 | 9 | |
| DEPTH= | 6 | 2 5 | 4 0 | 4 7 | 7 8 | 7 9 | 7 9 | 2 | |

*SECNO 410 000

3265 DIVIDED FLOW

3301 HV CHANGED MORE THAN HVINS

3685 20 TRIALS ATTEMPTED WSEL,CWSEL
3693 PROBABLE MINIMUM SPECIFIC ENERGY
3720 CRITICAL DEPTH ASSUMED

3470 ENCROACHMENT STATIONS= 4789 9 5300 0 TYPE= 1 TARGET= 510 100

| | | | | | | | | | |
|---|---|---|---|---|---|---|---|---|---|
| 410 000 | 14 63 | 553 03 | 553 03 | 00 | 556 19 | 3 15 | 2 51 | 64 | 548 40 |
| 18700 0 | 2642 8 | 15806 2 | 251 0 | 401 7 | 1036 1 | 62 6 | 99 2 | 14 2 | 550 00 |
| 06 | 6 58 | 15 26 | 4 01 | 045 | 040 | 045 | 000 | 538 40 | 4789 90 |
| 007103 | 535 | 492 | 460 | 20 | 11 | 0 | 00 | 275 55 | 5102 59 |

| | | | | | | | | | |
|---|---|---|---|---|---|---|---|---|---|
| SECNO | DEPTH | CWSEL | CRIWS | WSELK | EG | HV | HL | OLOSS | L-BANK ELEV |
| Q | QLOB | QCH | QROB | ALOB | ACH | AROB | VOL | TWA | R-BANK ELEV |
| TIME | VLOB | VCH | VROB | XNL | XNCH | XNR | WTN | ELMIN | SSTA |
| SLOPE | XLOBL | XLCH | XLOBR | ITRIAL | IDC | ICONT | CORAR | TOPWID | ENDST |

FLOW DISTRIBUTION FOR SECNO= 410 00 CWSEL= 553 03

| STA= | 4790 | 4806 | 4816 | 4827 | 4851 | 4883 | 4944 | 4970 | 5062 | 5096 | 5103 |
|---|---|---|---|---|---|---|---|---|---|---|---|
| PER Q= | 1 | 5 | 1 7 | 6 0 | 3 0 | 3 | 2 6 | 84 5 | 1 3 | 0 | |
| AREA= | 6 8 | 22 2 | 45 0 | 129 4 | 97 3 | 19 6 | 81 5 | 1036 1 | 61 0 | 1 7 | |
| VEL= | 1 6 | 4 4 | 7 1 | 8 6 | 5 8 | 2 4 | 5 9 | 15 3 | 4 1 | 1 1 | |
| DEPTH= | 4 | 2 0 | 4 1 | 5 5 | 3 1 | 3 | 3 1 | 11 2 | 1 8 | 3 | |

*SECNO 412 000

3301 HV CHANGED MORE THAN HVINS

3302 WARNING CONVEYANCE CHANGE OUTSIDE OF ACCEPTABLE RANGE, KRATIO = 2 43

| | | | | | | | | | |
|---|---|---|---|---|---|---|---|---|---|
| 412 000 | 16 68 | 557 18 | 00 | 00 | 557 84 | 66 | 1 41 | 25 | 551 20 |
| 18700 0 | 1357 5 | 17027 6 | 314 9 | 471 6 | 2515 8 | 129 9 | 130 0 | 18 5 | 551 80 |
| 09 | 2 88 | 6 77 | 2 42 | 045 | 040 | 045 | 000 | 540 50 | 4811 60 |
| 001202 | 540 | 587 | 627 | 0 | 0 | 0 | 00 | 377 25 | 5188 85 |

FLOW DISTRIBUTION FOR SECNO= 412 00 CWSEL= 557 18

| STA= | 4812 | 4838 | 4870 | 4901 | 4922 | 4938 | 5145 | 5186 | 5189 |
|---|---|---|---|---|---|---|---|---|---|
| PER Q= | 5 | 1 6 | 1 8 | 1 7 | 1 6 | 91 1 | 1 7 | 0 | |
| AREA= | 50 5 | 114 4 | 119 7 | 100 1 | 87 0 | 2515 8 | 128 5 | 1 4 | |
| VEL= | 1 8 | 2 7 | 2 8 | 3 2 | 3 5 | 6 8 | 2 4 | 6 | |
| DEPTH= | 1 9 | 3 6 | 3 8 | 4 6 | 5 4 | 12 2 | 3 1 | 4 | |

*SECNO 414 000

3301 HV CHANGED MORE THAN HVINS

3302 WARNING CONVEYANCE CHANGE OUTSIDE OF ACCEPTABLE RANGE, KRATIO = 50

| | | | | | | | | | |
|---|---|---|---|---|---|---|---|---|---|
| 414 000 | 14 45 | 557 75 | 00 | 00 | 559 53 | 1 78 | 1 35 | 34 | 549 80 |
| 18700 0 | 2853 4 | 11765 6 | ·4081 0 | 380 6 | 954 4 | 584 4 | 166 5 | 23 3 | 551 70 |
| 11 | 7 50 | 12 33 | 6 98 | 045 | 040 | 045 | 000 | 543 30 | 4897 08 |
| 004770 | 500 | 630 | 800 | 3 | 0 | 0 | 00 | 285 93 | 5183 00 |

| | | | | | | | | | |
|---|---|---|---|---|---|---|---|---|---|
| SECNO | DEPTH | CWSEL | CRIWS | WSELK | EG | HV | HL | OLOSS | L-BANK ELEV |
| Q | QLOB | QCH | QROB | ALOB | ACH | AROB | VOL | TWA | R-BANK ELEV |
| TIME | VLOB | VCH | VROB | XNL | XNCH | XNR | WTN | ELMIN | SSTA |
| SLOPE | XLOBL | XLCH | XLOBR | ITRIAL | IDC | ICONT | CORAR | TOPWID | ENDST |

FLOW DISTRIBUTION FOR SECNO= 414 00 CWSEL= 557 75

| STA= | 4897 | 4944 | 4967 | 5056 | 5077 | 5136 | 5162 | 5183 |
|---|---|---|---|---|---|---|---|---|
| PER Q= | 6 5 | 8 8 | 62 9 | 5 3 | 13 9 | 2 4 | 2 | |
| AREA= | 200 0 | 180 6 | 954 4 | 129 7 | 350 2 | 88 1 | 16 4 | |
| VEL= | 6 1 | 9 1 | 12 3 | 7 7 | 7 4 | 5 2 | 1 9 | |
| DEPTH= | 4 2 | 8 0 | 10 8 | 6 2 | 5 9 | 3 5 | 8 | |

*SECNO 416 000

7185 MINIMUM SPECIFIC ENERGY

3720 CRITICAL DEPTH ASSUMED

| | | | | | | | | | |
|---|---|---|---|---|---|---|---|---|---|
| 416 000 | 12 73 | 562 73 | 562 73 | 00 | 564 72 | 1 99 | 3 39 | 06 | 556 90 |
| 18700 0 | 8901 4 | 8390 5 | 1408 1 | 843 8 | 653 9 | 318 8 | 197 2 | 29 5 | 560 60 |
| 12 | 10 55 | 12 83 | 4 42 | 030 | 035 | 030 | 000 | 550 00 | 4800 18 |
| 004694 | 720 | 720 | 700 | 5 | 12 | 0 | 00 | 472 17 | 5272 36 |

FLOW DISTRIBUTION FOR SECNO= 416 00 CWSEL= 562 73

| STA= | 4800 | 4844 | 4866 | 4908 | 4942 | 4960 | 5027 | 5111 | 5212 | 5272 |
|---|---|---|---|---|---|---|---|---|---|---|
| PER Q= | 9 4 | 9 0 | 13 4 | 9 7 | 6 0 | 44 9 | 4 1 | 3 0 | 4 | |
| AREA= | 184 3 | 143 2 | 235 4 | 176 3 | 104 7 | 653 9 | 152 6 | 136 4 | 29 8 | |
| VEL= | 9 6 | 11 8 | 10 7 | 10 3 | 10 7 | 12 8 | 5 1 | 4 2 | 2 2 | |
| DEPTH= | 4 2 | 6 5 | 5 6 | 5 3 | 5 6 | 9 8 | 1 8 | 1 4 | 5 | |

*SECNO 418 000

3301 HV CHANGED MORE THAN HVINS

3302 WARNING CONVEYANCE CHANGE OUTSIDE OF ACCEPTABLE RANGE, KRATIO = 1 48

3470 ENCROACHMENT STATIONS= 4714 0 5272 1 TYPE= 1 TARGET= 558 100

| | | | | | | | | | |
|---|---|---|---|---|---|---|---|---|---|
| 418 000 | 13 90 | 565 40 | 00 | 00 | 566 44 | 1 04 | 1 63 | 09 | 558 40 |
| 18700 0 | 10489 3 | 6489 1 | 1721 6 | 1389 6 | 661 9 | 380 8 | 223 1 | 35 5 | 559 10 |
| 14 | 7 55 | 9 80 | 4 52 | 030 | 035 | 030 | 000 | 551 50 | 4714 00 |
| 002148 | 535 | 532 | 520 | 2 | 0 | 0 | 00 | 515 29 | 5229 29 |

| | | | | | | | | | |
|---|---|---|---|---|---|---|---|---|---|
| SECNO | DEPTH | CWSEL | CRIWS | WSELK | EG | HV | HL | OLOSS | L-BANK ELEV |
| Q | QLOB | QCH | QROB | ALOB | ACH | AROB | VOL | TWA | R-BANK ELEV |
| TIME | VLOB | VCH | VROB | XNL | XNCH | XNR | WTN | ELMIN | SSTA |
| SLOPE | XLOBL | XLCH | XLOBR | ITRIAL | IDC | ICONT | CORAR | TOPWID | ENDST |

FLOW DISTRIBUTION FOR SECNO= 418 00 CWSEL= 565 40

| STA= | 4714 | 4741 | 4781 | 4845 | 4907 | 4951 | 4973 | 5029 | 5048 | 5080 | 5131 | 5175 | 5229 |
|---|---|---|---|---|---|---|---|---|---|---|---|---|---|
| PER Q= | 7 | 3 1 | 12 2 | 18 9 | 14 2 | 7 0 | 34 7 | 4 1 | 2 7 | 1 2 | 8 | 4 | |
| AREA= | 44 1 | 120 9 | 332 3 | 424 4 | 312 4 | 155 4 | 661 9 | 106 8 | 102 1 | 76 8 | 57 2 | 37 7 | |
| VEL= | 3 1 | 4 8 | 6 9 | 8 3 | 8 5 | 8 4 | 9 8 | 7 1 | 5 0 | 3 0 | 2 7 | 1 8 | |
| DEPTH= | 1 6 | 3 0 | 5 2 | 6 9 | 7 1 | 7 0 | 11 9 | 5 5 | 3 2 | 1 5 | 1 3 | 7 | |

*SECNO 420 000

3301 HV CHANGED MORE THAN HVINS

7185 MINIMUM SPECIFIC ENERGY
3720 CRITICAL DEPTH ASSUMED

3470 ENCROACHMENT STATIONS= 4300 0 5335 4 TYPE= 1 TARGET= 1035 400

| | | | | | | | | | |
|---|---|---|---|---|---|---|---|---|---|
| 420 000 | 13 67 | 566 37 | 566 37 | 00 | 568 39 | 2 02 | 1 36 | 29 | 561 80 |
| 18700 0 | 937 4 | 7355 4 | 10407 2 | 144 1 | 529 0 | 1074 3 | 244 5 | 40 1 | 559 60 |
| 15 | 6 51 | 13 90 | 9 69 | 030 | 035 | 030 | 000 | 552 70 | 4899 68 |
| 004703 | 400 | 432 | 505 | 4 | 6 | 0 | 00 | 371 91 | 5271 59 |

FLOW DISTRIBUTION FOR SECNO= 420 00 CWSEL= 566 37

| STA= | 4900 | 4914 | 4949 | 4972 | 5015 | 5032 | 5070 | 5101 | 5188 | 5209 | 5237 | 5272 |
|---|---|---|---|---|---|---|---|---|---|---|---|---|
| PER Q= | 0 | 1 4 | 3 6 | 39 3 | 6 8 | 12 4 | 8 4 | 20 3 | 4 8 | 2 8 | 2 | |
| AREA= | 4 0 | 56 5 | 83 6 | 529 0 | 109 3 | 215 4 | 157 6 | 402 7 | 95 0 | 77 8 | 16 6 | |
| VEL= | 1 5 | 4 7 | 8 0 | 13 9 | 11 6 | 10 8 | 10 0 | 9 4 | 9 4 | 6 7 | 2 1 | |
| DEPTH= | 3 | 1 6 | 3 6 | 12 3 | 6 3 | 5 7 | 5 1 | 4 6 | 4 6 | 2 8 | 5 | |

*SECNO 422 000

3301 HV CHANGED MORE THAN HVINS

3470 ENCROACHMENT STATIONS= 4500 0 5231 0 TYPE= 1 TARGET= 731 000

| | | | | | | | | | |
|---|---|---|---|---|---|---|---|---|---|
| 422 000 | 15 59 | 568 09 | 00 | 00 | 569 43 | 1 34 | 97 | 07 | 560 30 |
| 18200 0 | 2510 1 | 7234 4 | 8455 5 | 376 9 | 633 8 | 1081 7 | 256 5 | 42 6 | 561 00 |
| 16 | 6 66 | 11 41 | 7 82 | 030 | 035 | 030 | 000 | 552 50 | 4821 34 |
| 002743 | 252 | 262 | 285 | 3 | 0 | 0 | 00 | 409 66 | 5231 00 |

| | | | | | | | | | |
|---|---|---|---|---|---|---|---|---|---|
| SECNO | DEPTH | CWSEL | CRIWS | WSELK | EG | HV | HL | OLOSS | L-BANK ELEV |
| Q | QLOB | QCH | QROB | ALOB | ACH | AROB | VOL | TWA | R-BANK ELEV |
| TIME | VLOB | VCH | VROB | XNL | XNCH | XNR | WTN | ELMIN | SSTA |
| SLOPE | XLOBL | XLCH | XLOBR | ITRIAL | IDC | ICONT | CORAR | TOPWID | ENDST |

FLOW DISTRIBUTION FOR SECNO= 422 00 CWSEL= 568 09

| STA= | 4821 | 4864 | 4916 | 4940 | 4965 | 4973 | 5022 | 5047 | 5075 | 5121 | 5181 | 5225 | 5231 |
|---|---|---|---|---|---|---|---|---|---|---|---|---|---|
| PER Q= | 1 | 1 5 | 2 6 | 6 2 | 3 3 | 39 7 | 8 7 | 7 0 | 9 4 | 13 3 | 7 6 | 6 | |
| AREA= | 14 5 | 79 7 | 82 0 | 138 6 | 62 0 | 633 8 | 169 6 | 155 3 | 228 0 | 311 6 | 195 1 | 22 1 | |
| VEL= | 1 3 | 3 5 | 5 8 | 8 2 | 9 8 | 11 4 | 9 3 | 8 2 | 7 5 | 7 8 | 7 1 | 4 5 | |
| DEPTH= | 3 | 1 5 | 3 3 | 5 6 | 7 4 | 13 0 | 6 8 | 5 6 | 4 9 | 5 2 | 4 5 | 3 5 | |

CCHV= 300 CEHV= 500

*SECNO 428 000

3470 ENCROACHMENT STATIONS= 4600 0 5208 0 TYPE= 1 TARGET= 608 000

| | | | | | | | | | |
|---|---|---|---|---|---|---|---|---|---|
| 428 000 | 15 91 | 568 71 | 00 | 00 | 569 67 | 96 | 13 | 11 | 559 30 |
| 18200 0 | 3532 3 | 10942 9 | 3724 8 | 577 5 | 1222 6 | 670 4 | 259 8 | 43 2 | 562 80 |
| 16 | 6 12 | 8 95 | 5 56 | 030 | 035 | 030 | 000 | 552 80 | 4814 54 |
| 001530 | 70 | 62 | 60 | 3 | 0 | 0 | 00 | 393 46 | 5208 00 |

FLOW DISTRIBUTION FOR SECNO= 428 00 CWSEL= 568 71

| STA= | 4815 | 4865 | 4900 | 4939 | 4958 | 4977 | 5072 | 5096 | 5138 | 5189 | 5208 |
|---|---|---|---|---|---|---|---|---|---|---|---|
| PER Q= | 3 | 1 2 | 4 9 | 5 4 | 7 6 | 60 1 | 4 5 | 6 3 | 7 7 | 1 9 | |
| AREA= | 33 2 | 70 5 | 171 5 | 136 7 | 165 7 | 1222 6 | 135 9 | 204 3 | 250 8 | 79 4 | |
| VEL= | 1 5 | 3 1 | 5 2 | 7 3 | 8 4 | 9 0 | 6 0 | 5 6 | 5 6 | 4 5 | |
| DEPTH= | 7 | 2 0 | 4 4 | 7 3 | 9 0 | 12 9 | 5 5 | 5 0 | 4 9 | 4 1 | |

*SECNO 429 000

3301 HV CHANGED MORE THAN HVINS

3302 WARNING CONVEYANCE CHANGE OUTSIDE OF ACCEPTABLE RANGE, KRATIO = 55

3470 ENCROACHMENT STATIONS= 4750 0 5204 0 TYPE= 1 TARGET= 454 000

COUNTRY CLUB ROAD - DIP SECTION - CULVERT AREA 38 1 SQ FT

MODELED AS SECTION OVER T O R (W/O CULVERTS)

100-YR FLOWRATE REDUCED BY 260 CFS TO ACCOUNT FOR CULVERT FLOW

| | | | | | | | | | |
|---|---|---|---|---|---|---|---|---|---|
| 429 000 | 7 57 | 568 47 | 00 | 00 | 570 12 | 1 65 | 11 | 34 | 561 60 |
| 17940 0 | 3937 0 | 7581 1 | 6421 9 | 421 9 | 687 5 | 643 5 | 261 9 | 43 5 | 561 80 |
| 16 | 9 33 | 11 03 | 9 98 | 030 | 035 | 030 | 000 | 560 90 | 4827 91 |
| 004888 | 35 | 47 | 38 | 2 | 0 | 0 | 00 | 376 09 | 5204 00 |

| | | | | | | | | | |
|---|---|---|---|---|---|---|---|---|---|
| SECNO | DEPTH | CWSEL | CRIWS | WSELK | EG | HV | HL | OLOSS | L-BANK ELEV |
| Q | QLOB | QCH | QROB | ALOB | ACH | AROB | VOL | TWA | R-BANK ELEV |
| TIME | VLOB | VCH | VROB | XNL | XNCH | XNR | WTN | ELMIN | SSTA |
| SLOPE | XLOBL | XLCH | XLOBR | ITRIAL | IDC | ICONT | CORAR | TOPWID | ENDST |

FLOW DISTRIBUTION FOR SECNO= 429 00 CWSEL= 568 47

| STA= | 4828 | 4849 | 4899 | 4937 | 4962 | 5058 | 5096 | 5127 | 5169 | 5204 |
|---|---|---|---|---|---|---|---|---|---|---|
| PER Q= | 0 | 2 4 | 8 7 | 10 8 | 42 3 | 15 5 | 9 4 | 8 8 | 2 1 | |
| AREA= | 4 9 | 86 6 | 167 2 | 163 2 | 687 5 | 237 8 | 160 3 | 176 5 | 69 0 | |
| VEL= | 1 3 | 5 0 | 9 3 | 11 9 | 11 0 | 11 7 | 10 6 | 8 9 | 5 4 | |
| DEPTH= | 2 | 1 7 | 4 4 | 6 4 | 7 2 | 6 2 | 5 3 | 4 1 | 2 0 | |

*SECNO 430 000

3301 HV CHANGED MORE THAN HVINS

3470 ENCROACHMENT STATIONS= 4819 0 5182 0 TYPE= 1 TARGET= 363 000

| | | | | | | | | | |
|---|---|---|---|---|---|---|---|---|---|
| 430 000 | 12 14 | 569 24 | 00 | 00 | 570 36 | 1 12 | 08 | 16 | 560 00 |
| 18200 0 | 5165 3 | 7139 6 | 5895 0 | 803 1 | 654 7 | 904 0 | 262 8 | 43 7 | 560 30 |
| 17 | 6 43 | 10 90 | 6 52 | 045 | 040 | 045 | 000 | 557 10 | 4819 00 |
| 003430 | 20 | 20 | 20 | 4 | 0 | 0 | 00 | 363 00 | 5182 00 |

FLOW DISTRIBUTION FOR SECNO= 430 00 CWSEL= 569 24

| STA= | 4819 | 4860 | 4899 | 4941 | 4971 | 5029 | 5047 | 5085 | 5126 | 5173 | 5182 |
|---|---|---|---|---|---|---|---|---|---|---|---|
| PER Q= | 1 8 | 5 0 | 10 2 | 11 3 | 39 2 | 6 7 | 11 0 | 8 3 | 5 8 | 6 | |
| AREA= | 97 4 | 175 7 | 272 7 | 257 3 | 654 7 | 152 7 | 276 4 | 242 2 | 203 1 | 29 7 | |
| VEL= | 3 4 | 5 2 | 6 8 | 8 0 | 10 9 | 8 0 | 7 2 | 6 3 | 5 2 | 3 5 | |
| DEPTH= | 2 4 | 4 4 | 6 6 | 8 4 | 11 4 | 8 4 | 7 2 | 5 8 | 4 4 | 3 2 | |

CCHV= 100 CEHV= 300
*SECNO 432 000

3265 DIVIDED FLOW

3301 HV CHANGED MORE THAN HVINS

3685 20 TRIALS ATTEMPTED WSEL,CWSEL
3693 PROBABLE MINIMUM SPECIFIC ENERGY
3720 CRITICAL DEPTH ASSUMED

3470 ENCROACHMENT STATIONS= 4816 5 5144 0 TYPE= 1 TARGET= 327 500

| | | | | | | | | | |
|---|---|---|---|---|---|---|---|---|---|
| SECNO | DEPTH | CWSEL | CRIWS | WSELK | EG | HV | HL | OLOSS | L-BANK ELEV |
| Q | QLOB | QCH | QROB | ALOB | ACH | AROB | VOL | TWA | R-BANK ELEV |
| TIME | VLOB | VCH | VROB | XNL | XNCH | XNR | WTN | ELMIN | SSTA |
| SLOPE | XLOBL | XLCH | XLOBR | ITRIAL | IDC | ICONT | CORAR | TOPWID | ENDST |
| 432 000 | 11 94 | 570 14 | 570 14 | 00 | 572 77 | 2 63 | 22 | 45 | 562 10 |
| 18200 0 | 4206 0 | 11899 7 | 2094 2 | 551 1 | 785 0 | 303 5 | 264 9 | 44 0 | 564 40 |
| 17 | 7 63 | 15 16 | 6 90 | 045 | 040 | 045 | 000 | 558 20 | 4816 50 |
| 007567 | 48 | 44 | 42 | 20 | 5 | 0 | 00 | 318 43 | 5144 00 |

FLOW DISTRIBUTION FOR SECNO= 432 00 CWSEL= 570 14

| STA= | 4817 | 4864 | 4909 | 4922 | 4941 | 4953 | 4965 | 5040 | 5053 | 5096 | 5130 | 5144 |
|---|---|---|---|---|---|---|---|---|---|---|---|---|
| PER Q= | 5 7 | 9 3 | 8 | 1 | 2 0 | 5 1 | 65 4 | 3 6 | 6 7 | 1 1 | 1 | |
| AREA= | 164 9 | 211 2 | 29 8 | 8 2 | 52 0 | 85 0 | 785 0 | 70 7 | 170 7 | 51 5 | 10 5 | |
| VEL= | 6 3 | 8 1 | 4 9 | 2 5 | 7 1 | 10 9 | 15 2 | 9 3 | 7 2 | 3 8 | 2 4 | |
| DEPTH= | 3 4 | 4 7 | 2 4 | 4 | 4 2 | 7 4 | 10 4 | 5 8 | 3 9 | 1 5 | 8 | |

*SECNO 434 000

3685 20 TRIALS ATTEMPTED WSEL,CWSEL

3693 PROBABLE MINIMUM SPECIFIC ENERGY

3720 CRITICAL DEPTH ASSUMED

3470 ENCROACHMENT STATIONS= 4845 0 5200 0 TYPE= 1 TARGET= 355 000

| | | | | | | | | | |
|---|---|---|---|---|---|---|---|---|---|
| 434 000 | 14 96 | 572 76 | 572 76 | 00 | 575 61 | 2 86 | 1 12 | 07 | 565 30 |
| 18200 0 | 5076 5 | 11449 3 | 1674 2 | 632 8 | 714 1 | 245 4 | 270 3 | 45 0 | 567 60 |
| 17 | 8 02 | 16 03 | 6 82 | 045 | 040 | 045 | 000 | 557 80 | 4845 00 |
| 007260 | 125 | 161 | 155 | 20 | 11 | 0 | 00 | 261 23 | 5106 23 |

FLOW DISTRIBUTION FOR SECNO= 434 00 CWSEL= 572 76

| STA= | 4845 | 4868 | 4920 | 4954 | 4978 | 5037 | 5052 | 5074 | 5095 | 5106 |
|---|---|---|---|---|---|---|---|---|---|---|
| PER Q= | 3 0 | 8 6 | 7 7 | 8 6 | 62 9 | 3 1 | 3 4 | 2 4 | 3 | |
| AREA= | 87 5 | 216 2 | 169 7 | 159 4 | 714 1 | 71 2 | 87 8 | 69 2 | 17 2 | |
| VEL= | 6 2 | 7 3 | 8 2 | 9 8 | 16 0 | 7 8 | 7 0 | 6 3 | 3 6 | |
| DEPTH= | 3 9 | 4 2 | 5 0 | 6 5 | 12 2 | 4 7 | 4 0 | 3 4 | 1 5 | |

*SECNO 436 000

3301 HV CHANGED MORE THAN HVINS

3685 20 TRIALS ATTEMPTED WSEL,CWSEL

3693 PROBABLE MINIMUM SPECIFIC ENERGY

3720 CRITICAL DEPTH ASSUMED

| | | | | | | | | | |
|---|---|---|---|---|---|---|---|---|---|
| SECNO | DEPTH | CWSEL | CRIWS | WSELK | EG | HV | HL | OLOSS | L-BANK ELEV |
| Q | QLOB | QCH | QROB | ALOB | ACH | AROB | VOL | TWA | R-BANK ELEV |
| TIME | VLOB | VCH | VROB | XNL | XNCH | XNR | WTN | ELMIN | SSTA |
| SLOPE | XLOBL | XLCH | XLOBR | ITRIAL | IDC | ICONT | CORAR | TOPWID | ENDST |
| 436 000 | 12 96 | 576 36 | 576 36 | 00 | 580 73 | 4 38 | 3 29 | 46 | 571 10 |
| 18200 0 | 568 6 | 13176 4 | 4455 0 | 73 2 | 730 5 | 330 4 | 282 3 | 46 7 | 567 30 |
| 18 | 7 76 | 18 04 | 13 48 | 045 | 040 | 045 | 000 | 563 40 | 4941 23 |
| 010315 | 385 | 384 | 380 | 20 | 15 | 0 | 00 | 133 01 | 5074 24 |

FLOW DISTRIBUTION FOR SECNO= 436 00 CWSEL= 576 36

| STA= | 4941 | 4945 | 4963 | 5032 | 5061 | 5074 |
|---|---|---|---|---|---|---|
| PER Q= | 1 | 3 0 | 72 4 | 21 8 | 2 7 | |
| AREA= | 4 1 | 69 1 | 730 5 | 270 1 | 60 3 | |
| VEL= | 3 3 | 8 0 | 18 0 | 14 7 | 8 1 | |
| DEPTH= | 1 1 | 3 8 | 10 7 | 9 2 | 4 6 | |

*SECNO 438 000

3301 HV CHANGED MORE THAN HVINS

3302 WARNING CONVEYANCE CHANGE OUTSIDE OF ACCEPTABLE RANGE, KRATIO = 2 48

| | | | | | | | | | |
|---|---|---|---|---|---|---|---|---|---|
| 438 000 | 17 05 | 581 45 | 00 | 00 | 582 38 | 92 | 1 30 | 35 | 571 70 |
| 18200 0 | 1458 5 | 14373 3 | 2368 2 | 314 3 | 1739 8 | 434 8 | 298 1 | 48 4 | 573 00 |
| 19 | 4 64 | 8 26 | 5 45 | 045 | 040 | 045 | 000 | 564 40 | 4881 14 |
| 001681 | 375 | 383 | 373 | 2 | 0 | 0 | 00 | 249 17 | 5130 31 |

FLOW DISTRIBUTION FOR SECNO= 438 00 CWSEL= 581 45

| STA= | 4881 | 4913 | 4938 | 5074 | 5089 | 5106 | 5124 | 5130 |
|---|---|---|---|---|---|---|---|---|
| PER Q= | 1 9 | 6 2 | 79 0 | 3 8 | 5 3 | 3 7 | 2 | |
| AREA= | 108 9 | 205 4 | 1739 8 | 122 4 | 162 8 | 133 5 | 16 0 | |
| VEL= | 3 1 | 5 5 | 8 3 | 5 6 | 5 9 | 5 1 | 2 1 | |
| DEPTH= | 3 5 | 8 2 | 12 8 | 8 5 | 9 2 | 7 5 | 2 6 | |

*SECNO 440 000

3301 HV CHANGED MORE THAN HVINS

3685 20 TRIALS ATTEMPTED WSEL,CWSEL
3693 PROBABLE MINIMUM SPECIFIC ENERGY

| | | | | | | | | | |
|---|---|---|---|---|---|---|---|---|---|
| SECNO | DEPTH | CWSEL | CRIWS | WSELK | EG | HV | HL | OLOSS | L-BANK ELEV |
| Q | QLOB | QCH | QROB | ALOB | ACH | AROB | VOL | TWA | R-BANK ELEV |
| TIME | VLOB | VCH | VROB | XNL | XNCH | XNR | WTN | ELMIN | SSTA |
| SLOPE | XLOBL | XLCH | XLOBR | ITRIAL | IDC | ICONT | CORAR | TOPWID | ENDST |

3720 CRITICAL DEPTH ASSUMED

| | | | | | | | | | |
|---|---|---|---|---|---|---|---|---|---|
| 440 000 | 13 55 | 584 15 | 584 15 | 00 | 588 90 | 4 75 | 2 34 | 1 15 | 585 50 |
| 18200 0 | 0 | 18200 0 | 0 | 0 | 1041 0 | 0 | 324 7 | 51 1 | 588 00 |
| 20 | 00 | 17 48 | 00 | 000 | 040 | 000 | 000 | 570 60 | 4929 71 |
| 011998 | 650 | 661 | 630 | 20 | 15 | 0 | 00 | 111 68 | 5041 39 |

FLOW DISTRIBUTION FOR SECNO= 440 00 CWSEL= 584 15

| | |
|---|---|
| STA= | 4930 5046 |
| PER Q= | 100 0 |
| AREA= | 1041 0 |
| VEL= | 17 5 |
| DEPTH= | 9 3 |

*SECNO 442 000

3301 HV CHANGED MORE THAN HVINS

3685 20 TRIALS ATTEMPTED WSEL,CWSEL
3693 PROBABLE MINIMUM SPECIFIC ENERGY
3720 CRITICAL DEPTH ASSUMED

| | | | | | | | | | |
|---|---|---|---|---|---|---|---|---|---|
| 442 000 | 19 15 | 601 85 | 601 85 | 00 | 605 46 | 3 61 | 6 27 | 11 | 595 60 |
| 18200 0 | 2834 7 | 14373 3 | 992 0 | 292 3 | 867 6 | 198 7 | 344 1 | 53 7 | 596 20 |
| 21 | 9 70 | 16 57 | 4 99 | 045 | 040 | 045 | 000 | 582 70 | 4919 70 |
| 006783 | 730 | 710 | 625 | 20 | 14 | 0 | 00 | 226 10 | 5145 80 |

FLOW DISTRIBUTION FOR SECNO= 442 00 CWSEL= 601 85

| | | | | | | | | | | | |
|---|---|---|---|---|---|---|---|---|---|---|---|
| STA= | 4920 | 4928 | 4943 | 4957 | 4966 | 5028 | 5043 | 5073 | 5108 | 5142 | 5146 |
| PER Q= | 6 | 5 0 | 6 9 | 3 1 | 79 0 | 2 6 | 2 0 | 7 | 2 | 0 | |
| AREA= | 21 9 | 96 4 | 116 2 | 57 8 | 867 6 | 65 9 | 73 4 | 39 7 | 19 0 | 6 | |
| VEL= | 4 7 | 9 5 | 10 7 | 9 9 | 16 6 | 7 3 | 4 9 | 3 0 | 1 8 | 8 | |
| DEPTH= | 2 7 | 6 6 | 7 9 | 7 1 | 13 9 | 4 5 | 2 4 | 1 2 | 6 | 2 | |

*SECNO 444 000

3301 HV CHANGED MORE THAN HVINS

| | | | | | | | | | |
|---|---|---|---|---|---|---|---|---|---|
| SECNO | DEPTH | CWSEL | CRIWS | WSELK | EG | HV | HL | OLOSS | L-BANK ELEV |
| Q | QLOB | QCH | QROB | ALOB | ACH | AROB | VOL | TWA | R-BANK ELEV |
| TIME | VLOB | VCH | VROB | XNL | XNCH | XNR | WTN | ELMIN | SSTA |
| SLOPE | XLOBL | XLCH | XLOBR | ITRIAL | IDC | ICONT | CORAR | TOPWID | ENDST |

3302 WARNING CONVEYANCE CHANGE OUTSIDE OF ACCEPTABLE RANGE, KRATIO = 1 84

3470 ENCROACHMENT STATIONS= 4915 0 5055 8 TYPE= 1 TARGET= 140 800

| | | | | | | | | | |
|---|---|---|---|---|---|---|---|---|---|
| 444 000 | 21 69 | 605 89 | 00 | 00 | 607 65 | 1 76 | 2 00 | 19 | 595 50 |
| 18200 0 | 2811 3 | 15372 1 | 16 6 | 418 5 | 1370 0 | 11 8 | 365 7 | 56 0 | 593 50 |
| 23 | 6 72 | 11 22 | 1 42 | 045 | 040 | 045 | 000 | 584 20 | 4916 87 |
| 002002 | 630 | 592 | 515 | 2 | 0 | 0 | 00 | 118 13 | 5035 00 |

FLOW DISTRIBUTION FOR SECNO= 444 00 CWSEL= 605 89

| STA= | 4917 | 4919 | 4942 | 4960 | 5033 | 5035 |
|---|---|---|---|---|---|---|
| PER Q= | 1 | 8 3 | 7 0 | 84 5 | 1 | |
| AREA= | 12 4 | 222 6 | 183 5 | 1370 0 | 11 8 | |
| VEL= | 1 7 | 6 8 | 6 9 | 11 2 | 1 4 | |
| DEPTH= | 4 9 | 9 9 | 10 2 | 18 7 | 6 2 | |

*SECNO 446 000

3301 HV CHANGED MORE THAN HVINS

3470 ENCROACHMENT STATIONS= 4865 0 5240 0 TYPE= 1 TARGET= 375 000

| | | | | | | | | | |
|---|---|---|---|---|---|---|---|---|---|
| 446 000 | 22 41 | 607 21 | 00 | 00 | 608 00 | 79 | 25 | 10 | 594 60 |
| 18200 0 | 5878 8 | 10678 5 | 1642 7 | 1099 0 | 1285 8 | 500 0 | 374 6 | 56 9 | 601 10 |
| 24 | 5 35 | 8 30 | 3 29 | 045 | 040 | 045 | 000 | 584 80 | 4865 00 |
| 001173 | 150 | 171 | 185 | 2 | 0 | 0 | 00 | 314 06 | 5179 06 |

FLOW DISTRIBUTION FOR SECNO= 446 00 CWSEL= 607 21

| STA= | 4865 | 4878 | 4930 | 4951 | 4965 | 5035 | 5048 | 5084 | 5122 | 5135 | 5179 |
|---|---|---|---|---|---|---|---|---|---|---|---|
| PER Q= | 2 7 | 17 1 | 7 1 | 5 4 | 58 7 | 1 5 | 3 8 | 3 2 | 4 | 0 | |
| AREA= | 135 5 | 561 4 | 232 6 | 169 5 | 1285 8 | 75 2 | 199 6 | 183 1 | 33 0 | 9 1 | |
| VEL= | 3 7 | 5 5 | 5 5 | 5 8 | 8 3 | 3 7 | 3 5 | 3 2 | 2 0 | 4 | |
| DEPTH= | 10 8 | 10 8 | 10 9 | 11 8 | 18 4 | 6 0 | 5 5 | 4 8 | 2 5 | 2 | |

CCHV= 300 CEHV= 500

| | | | | | | | | | |
|---|---|---|---|---|---|---|---|---|---|
| SECNO | DEPTH | CWSEL | CRIWS | WSELK | EG | HV | HL | OLOSS | L-BANK ELEV |
| Q | QLOB | QCH | QROB | ALOB | ACH | AROB | VOL | TWA | R-BANK ELEV |
| TIME | VLOB | VCH | VROB | XNL | XNCH | XNR | WTN | ELMIN | SSTA |
| SLOPE | XLOBL | XLCH | XLOBR | ITRIAL | IDC | ICONT | CORAR | TOPWID | ENDST |

*SECNO 448 000

3302 WARNING CONVEYANCE CHANGE OUTSIDE OF ACCEPTABLE RANGE, KRATIO = 1 43

3470 ENCROACHMENT STATIONS= 4850 0 5200 0 TYPE= 1 TARGET= 350 000

| | | | | | | | | | |
|---|---|---|---|---|---|---|---|---|---|
| 448 000 | 23 24 | 607 64 | 00 | 00 | 608 15 | 51 | 06 | 08 | 593 20 |
| 18200 0 | 4121 8 | 13594 7 | 483 5 | 1042 0 | 2183 3 | 251 1 | 380 6 | 57 5 | 600 50 |
| 24 | 3 96 | 6 23 | 1 93 | 045 | 040 | 045 | 000 | 584 40 | 4850 00 |
| 000573 | 68 | 85 | 110 | 2 | 0 | 0 | 00 | 289 25 | 5139 25 |

FLOW DISTRIBUTION FOR SECNO= 448 00 CWSEL= 607 64

| STA= | 4850 | 4878 | 4906 | 4936 | 5049 | 5060 | 5111 | 5137 | 5139 |
|---|---|---|---|---|---|---|---|---|---|
| PER Q= | 5 2 | 7 4 | 10 1 | 74 7 | 1 1 | 1 5 | 0 | 0 | |
| AREA= | 302 0 | 330 0 | 410 0 | 2183 3 | 70 0 | 164 8 | 15 6 | 7 | |
| VEL= | 3 1 | 4 1 | 4 5 | 6 2 | 2 8 | 1 7 | 6 | 4 | |
| DEPTH= | 10 9 | 11 7 | 13 4 | 19 4 | 6 5 | 3 2 | 6 | 4 | |

*SECNO 449 000

3470 ENCROACHMENT STATIONS= 4860 0 5200 0 TYPE= 1 TARGET= 340 000

PRIVATE ROAD - DIP SECTION WITH STEEL GRATING BRIDGE
MODELED AS SECTION OVER T O R USING ORIGINAL T O R POINTS
EXCEPT AT GRATING WHERE GRATING IS IGNORED AND CHANNEL
BOTTOM IS SHOWN IN 6-FOOT WIDE SECTION

| | | | | | | | | | |
|---|---|---|---|---|---|---|---|---|---|
| 449 000 | 21 66 | 607 66 | 00 | 00 | 608 18 | 52 | 02 | 01 | 595 50 |
| 18200 0 | 3014 5 | 12148 2 | 3037 3 | 759 3 | 1859 9 | 781 9 | 383 2 | 57 7 | 591 10 |
| 24 | 3 97 | 6 53 | 3 88 | 045 | 040 | 045 | 000 | 586 00 | 4860 00 |
| 000709 | 20 | 37 | 38 | 1 | 0 | 0 | 00 | 293 21 | 5153 21 |

FLOW DISTRIBUTION FOR SECNO= 449 00 CWSEL= 607 66

| STA= | 4860 | 4887 | 4909 | 4931 | 5036 | 5057 | 5071 | 5142 | 5153 |
|---|---|---|---|---|---|---|---|---|---|
| PER Q= | 5 3 | 5 3 | 6 0 | 66 7 | 9 2 | 3 3 | 4 1 | 0 | |
| AREA= | 283 6 | 230 2 | 245 5 | 1859 9 | 318 5 | 144 7 | 318 3 | 4 | |
| VEL= | 3 4 | 4 2 | 4 4 | 6 5 | 5 3 | 4 2 | 2 4 | 1 | |
| DEPTH= | 10 4 | 10 5 | 11 4 | 17 7 | 14 8 | 11 0 | 4 5 | 0 | |

| | | | | | | | | | |
|---|---|---|---|---|---|---|---|---|---|
| SECNO | DEPTH | CWSEL | CRIWS | WSELK | EG | HV | HL | OLOSS | L-BANK ELEV |
| Q | QLOB | QCH | QROB | ALOB | ACH | AROB | VOL | TWA | R-BANK ELEV |
| TIME | VLOB | VCH | VROB | XNL | XNCH | XNR | WTN | ELMIN | SSTA |
| SLOPE | XLOBL | XLCH | XLOBR | ITRIAL | IDC | ICONT | CORAR | TOPWID | ENDST |

*SECNO 450 000

3470 ENCROACHMENT STATIONS= 4860 0 5250 0 TYPE= 1 TARGET= 390 000

| | | | | | | | | | |
|---|---|---|---|---|---|---|---|---|---|
| 450 000 | 21 73 | 607 83 | 00 | 00 | 608 24 | 41 | 03 | 03 | 595 50 |
| 18200 0 | 2646 9 | 11430 6 | 4122 6 | 771 2 | 1945 6 | 1149 7 | 387 0 | 58 0 | 590 80 |
| 24 | 3 43 | 5 88 | 3 59 | 045 | 040 | 045 | 000 | 586 10 | 4860 00 |
| 000520 | 43 | 49 | 42 | 2 | 0 | 0 | 00 | 321 73 | 5181 73 |

FLOW DISTRIBUTION FOR SECNO= 450 00 CWSEL= 607 83

| STA= | 4860 | 4887 | 4909 | 4931 | 5036 | 5057 | 5071 | 5142 | 5160 | 5182 |
|---|---|---|---|---|---|---|---|---|---|---|
| PER Q= | 4 6 | 4 7 | 5 3 | 62 8 | 9 4 | 3 6 | 9 1 | 5 | 0 | |
| AREA= | 288 2 | 233 9 | 249 1 | 1945 6 | 352 2 | 168 7 | 558 5 | 59 9 | 10 4 | |
| VEL= | 2 9 | 3 6 | 3 8 | 5 9 | 4 9 | 3 9 | 3 0 | 1 7 | 5 | |
| DEPTH= | 10 6 | 10 6 | 11 5 | 18 5 | 16 4 | 12 8 | 7 8 | 3 4 | 5 | |

CCHV= 100 CEHV= 300

*SECNO 452 000

3470 ENCROACHMENT STATIONS= 4872 0 5300 0 TYPE= 1 TARGET= 428 000

| | | | | | | | | | |
|---|---|---|---|---|---|---|---|---|---|
| 452 000 | 21 64 | 607 94 | 00 | 00 | 608 29 | 35 | 04 | 01 | 593 70 |
| 18200 0 | 3255 6 | 11191 8 | 3752 6 | 912 0 | 2038 3 | 1237 4 | 395 5 | 58 7 | 594 30 |
| 25 | 3 57 | 5 49 | 3 03 | 045 | 040 | 045 | 000 | 586 30 | 4872 00 |
| 000467 | 72 | 86 | 115 | 2 | 0 | 0 | 00 | 349 21 | 5221 21 |

FLOW DISTRIBUTION FOR SECNO= 452 00 CWSEL= 607 94

| STA= | 4872 | 4874 | 4896 | 4919 | 4929 | 4952 | 5064 | 5084 | 5116 | 5141 | 5175 | 5210 | 5221 |
|---|---|---|---|---|---|---|---|---|---|---|---|---|---|
| PER Q= | 1 | 4 5 | 4 5 | 2 2 | 6 6 | 61 5 | 5 3 | 6 5 | 3 4 | 3 0 | 2 2 | 2 | |
| AREA= | 24 8 | 236 3 | 237 0 | 111 9 | 302 0 | 2038 3 | 245 5 | 343 1 | 210 6 | 221 7 | 185 9 | 30 7 | |
| VEL= | 1 1 | 3 5 | 3 4 | 3 5 | 4 0 | 5 5 | 3 9 | 3 4 | 2 9 | 2 5 | 2 2 | 1 3 | |
| DEPTH= | 10 8 | 10 8 | 10 5 | 11 2 | 13 2 | 18 1 | 12 8 | 10 6 | 8 4 | 6 5 | 5 4 | 2 6 | |

*SECNO 454 000

| | | | | | | | | | |
|---|---|---|---|---|---|---|---|---|---|
| 454 000 | 21 50 | 608 00 | 00 | 00 | 608 44 | 43 | 12 | 02 | 596 60 |
| 18200 0 | 1039 1 | 15503 9 | 1657 0 | 340 2 | 2776 5 | 586 0 | 418 3 | 60 6 | 595 80 |
| 26 | 3 05 | 5 58 | 2 83 | 045 | 040 | 045 | 000 | 586 50 | 4924 15 |
| 000497 | 230 | 254 | 260 | 2 | 0 | 0 | 00 | 295 37 | 5219 52 |

| | | | | | | | | | |
|---|---|---|---|---|---|---|---|---|---|
| SECNO | DEPTH | CWSEL | CRIWS | WSELK | EG | HV | HL | OLOSS | L-BANK ELEV |
| Q | QLOB | QCH | QROB | ALOB | ACH | AROB | VOL | TWA | R-BANK ELEV |
| TIME | VLOB | VCH | VROB | XNL | XNCH | XNR | WTN | ELMIN | SSTA |
| SLOPE | XLOBL | XLCH | XLOBR | ITRIAL | IDC | ICONT | CORAR | TOPWID | ENDST |

FLOW DISTRIBUTION FOR SECNO= 454 00 CWSEL= 608 00

| STA= | 4924 | 4938 | 4953 | 4965 | 4971 | 5126 | 5148 | 5200 | 5220 |
|---|---|---|---|---|---|---|---|---|---|
| PER Q= | 2 | 1 7 | 2 4 | 1 3 | 85 2 | 4 6 | 4 4 | 2 | |
| AREA= | 33 8 | 113 9 | 125 5 | 67 0 | 2776 5 | 233 4 | 323 7 | 28 9 | |
| VEL= | 1 3 | 2 8 | 3 5 | 3 6 | 5 6 | 3 6 | 2 5 | 1 0 | |
| DEPTH= | 2 4 | 7 8 | 10 5 | 10 8 | 17 9 | 10 8 | 6 2 | 1 5 | |

*SECNO 456 000

3470 ENCROACHMENT STATIONS= 4870 5 5300 0 TYPE= 1 TARGET= 429 500

| | | | | | | | | | |
|---|---|---|---|---|---|---|---|---|---|
| 456 000 | 20 87 | 608 17 | 00 | 00 | 608 71 | 54 | 24 | 03 | 597 80 |
| 18200 0 | 1022 4 | 13348 5 | 3829 2 | 324 1 | 2062 5 | 981 0 | 450 4 | 63 2 | 594 60 |
| 28 | 3 15 | 6 47 | 3 90 | 045 | 040 | 045 | 000 | 587 30 | 4903 04 |
| 000714 | 450 | 420 | 300 | 2 | 0 | 0 | 00 | 292 89 | 5195 92 |

FLOW DISTRIBUTION FOR SECNO= 456 00 CWSEL= 608 17

| STA= | 4903 | 4906 | 4937 | 4952 | 5074 | 5101 | 5158 | 5185 | 5196 |
|---|---|---|---|---|---|---|---|---|---|
| PER Q= | 0 | 3 1 | 2 5 | 73 3 | 8 6 | 10 8 | 1 5 | 1 | |
| AREA= | 6 7 | 191 2 | 126 1 | 2062 5 | 332 9 | 517 6 | 118 9 | 11 6 | |
| VEL= | 1 0 | 2 9 | 3 6 | 6 5 | 4 7 | 3 8 | 2 4 | 9 | |
| DEPTH= | 2 7 | 6 1 | 8 5 | 16 9 | 12 4 | 9 0 | 4 4 | 1 1 | |

*SECNO 458 000

3470 ENCROACHMENT STATIONS= 4833 0 5200 0 TYPE= 1 TARGET= 367 000

| | | | | | | | | | |
|---|---|---|---|---|---|---|---|---|---|
| 458 000 | 19 98 | 608 38 | 00 | 00 | 609 04 | 66 | 29 | 04 | 596 80 |
| 18200 0 | 3055 6 | 13684 2 | 1460 2 | 753 2 | 1906 2 | 389 3 | 477 0 | 65 5 | 598 90 |
| 30 | 4 06 | 7 18 | 3 75 | 045 | 040 | 045 | 000 | 588 40 | 4833 00 |
| 000932 | 371 | 366 | 340 | 1 | 0 | 0 | 00 | 272 72 | 5105 72 |

FLOW DISTRIBUTION FOR SECNO= 458 00 CWSEL= 608 38

| STA= | 4833 | 4871 | 4894 | 4925 | 5042 | 5059 | 5092 | 5106 |
|---|---|---|---|---|---|---|---|---|
| PER Q= | 4 6 | 4 0 | 8 1 | 75 2 | 3 9 | 3 9 | 2 | |
| AREA= | 257 1 | 180 5 | 315 6 | 1906 2 | 158 2 | 209 6 | 21 4 | |
| VEL= | 3 3 | 4 1 | 4 7 | 7 2 | 4 5 | 3 4 | 1 3 | |
| DEPTH= | 6 7 | 8 1 | 10 1 | 16 3 | 9 5 | 6 3 | 1 5 | |

| | | | | | | | | | |
|---|---|---|---|---|---|---|---|---|---|
| SECNO | DEPTH | CWSEL | CRIWS | WSELK | EG | HV | HL | OLOSS | L-BANK ELEV |
| Q | QLOB | QCH | QROB | ALOB | ACH | AROB | VOL | TWA | R-BANK ELEV |
| TIME | VLOB | VCH | VROB | XNL | XNCH | XNR | WTN | ELMIN | SSTA |
| SLOPE | XLOBL | XLCH | XLOBR | ITRIAL | IDC | ICONT | CORAR | TOPWID | ENDST |

*SECNO 460 000

3301 HV CHANGED MORE THAN HVINS

3302 WARNING CONVEYANCE CHANGE OUTSIDE OF ACCEPTABLE RANGE, KRATIO = 70

| | | | | | | | | | |
|---|---|---|---|---|---|---|---|---|---|
| 460 000 | 18 80 | 608 50 | 00 | 00 | 609 73 | 1 23 | 52 | 17 | 610 70 |
| 18200 0 | 0 | 18200 0 | 0 | 0 | 2044 6 | 0 | 500 9 | 67 5 | 614 30 |
| 31 | 00 | 8 90 | 00 | 000 | 040 | 000 | 000 | 589 70 | 4934 53 |
| 001909 | 430 | 403 | 410 | 2 | 0 | 0 | 00 | 151 01 | 5085 54 |

FLOW DISTRIBUTION FOR SECNO= 460 00 CWSEL= 608 50

| | | |
|---|---|---|
| STA= | 4935 | 5095 |
| PER Q= | 100 0 | |
| AREA= | 2044 6 | |
| VEL= | 8 9 | |
| DEPTH= | 13 5 | |

*SECNO 462 000

3301 HV CHANGED MORE THAN HVINS

3470 ENCROACHMENT STATIONS= 4844 0 5200 0 TYPE= 1 TARGET= 356 000

| | | | | | | | | | |
|---|---|---|---|---|---|---|---|---|---|
| 462 000 | 17 36 | 609 46 | 00 | 00 | 610 18 | 71 | 39 | 05 | 607 40 |
| 18200 0 | 5 2 | 18123 7 | 71 1 | 4 9 | 2667 5 | 41 4 | 516 0 | 68 7 | 606 00 |
| 32 | 1 05 | 6 79 | 1 72 | 045 | 040 | 045 | 000 | 592 10 | 4918 06 |
| 001096 | 200 | 277 | 370 | 2 | 0 | 0 | 00 | 227 54 | 5145 60 |

FLOW DISTRIBUTION FOR SECNO= 462 00 CWSEL= 609 46

| | | | | | |
|---|---|---|---|---|---|
| STA= | 4918 | 4923 | 5124 | 5144 | 5146 |
| PER Q= | 0 | 99 6 | 4 | 0 | |
| AREA= | 4 9 | 2667 5 | 40 9 | 5 | |
| VEL= | 1 1 | 6 8 | 1 7 | 5 | |
| DEPTH= | 1 0 | 13 3 | 2 0 | 3 | |

```
   SECNO     DEPTH     CWSEL     CRIWS     WSELK     EG        HV        HL        OLOSS     L-BANK ELEV
   Q         QLOB      QCH       QROB      ALOB      ACH       AROB      VOL       TWA       R-BANK ELEV
   TIME      VLOB      VCH       VROB      XNL       XNCH      XNR       WTN       ELMIN     SSTA
   SLOPE     XLOBL     XLCH      XLOBR     ITRIAL    IDC       ICONT     CORAR     TOPWID    ENDST


CCHV=      100 CEHV=      300
*SECNO 464 000
  464 000     15 33    609 93        00        00    610 93      1 00        67        09    606 90
  18100 0      54 1   17745 1    300 8      32 0    2195 3      93 1     543 6      71 5    605 50
       34      1 69      8 08     3 23       050       038       040       000    594 60   4921 70
   001881      395       473      615         2         0         0        00    266 32   5188 02


FLOW DISTRIBUTION FOR SECNO=    464 00          CWSEL=    609 93

STA=    4922     4943     5150     5174     5188
  PER Q=        3     98 0      1 5        1
   AREA=     32 0   2195 3     79 2     13 9
    VEL=      1 7      8 1      3 5      1 6
  DEPTH=      1 5     10 6      3 2      1 0

*SECNO 466 000

3265 DIVIDED FLOW


3302 WARNING   CONVEYANCE CHANGE OUTSIDE OF ACCEPTABLE RANGE,  KRATIO =    66

        BASE CASE FOR FLOODWAY FOLLOWS THE NO LEVEE CONDITION FROM SECTIONS
                466 TO U/S LIMIT OF STUDY
  466 000     12 03    610 73        00        00    612 02      1 29      1 00        09    610 80
  18100 0         0   18013 8    86 2         0    1973 3      46 2     561 7      74 1    613 80
       35        00      9 13     1 86       000       038       040       000    598 70   4919 46
   004355      340       365      370         2         0         0        00    367 91   5319 83


FLOW DISTRIBUTION FOR SECNO=    466 00          CWSEL=    610 73

STA=    4919     5230     5280     5320
  PER Q=     99 5        3        1
   AREA=   1973 3     27 8     18 4
    VEL=      9 1      2 1      1 5
  DEPTH=      6 7        6        5

*SECNO 468 000
```

| | | | | | | | | | |
|---|---|---|---|---|---|---|---|---|---|
| SECNO | DEPTH | CWSEL | CRIWS | WSELK | EG | HV | HL | OLOSS | L-BANK ELEV |
| Q | QLOB | QCH | QROB | ALOB | ACH | AROB | VOL | TWA | R-BANK ELEV |
| TIME | VLOB | VCH | VROB | XNL | XNCH | XNR | WTN | ELMIN | SSTA |
| SLOPE | XLOBL | XLCH | XLOBR | ITRIAL | IDC | ICONT | CORAR | TOPWID | ENDST |

3265 DIVIDED FLOW

3280 CROSS SECTION 468 00 EXTENDED 2 32 FEET

3301 HV CHANGED MORE THAN HVINS

3302 WARNING CONVEYANCE CHANGE OUTSIDE OF ACCEPTABLE RANGE, KRATIO = 1 44

| | | | | | | | | | |
|---|---|---|---|---|---|---|---|---|---|
| 468 000 | 12 82 | 612 62 | 00 | 00 | 613 32 | 70 | 1 24 | 06 | 610 40 |
| 18100 0 | 193 4 | 17796 0 | 110 6 | 82 7 | 2630 8 | 59 6 | 585 1 | 78 0 | 615 90 |
| 37 | 2 34 | 6 76 | 1 85 | 050 | 038 | 040 | 000 | 599 80 | 4895 00 |
| 002086 | 475 | 425 | 365 | 2 | 0 | 0 | 00 | 444 32 | 5374 54 |

FLOW DISTRIBUTION FOR SECNO= 468 00 CWSEL= 612 62

| STA= | 4895 | 4932 | 5306 | 5322 | 5361 | 5375 |
|---|---|---|---|---|---|---|
| PER Q= | 1 1 | 98 3 | 0 | 5 | 0 | |
| AREA= | 82 7 | 2630 8 | 5 0 | 49 7 | 4 9 | |
| VEL= | 2 3 | 6 8 | 1 5 | 2 0 | 9 | |
| DEPTH= | 2 3 | 7 5 | 3 | 1 3 | 4 | |

*SECNO 468 200

3265 DIVIDED FLOW

| | | | | | | | | | |
|---|---|---|---|---|---|---|---|---|---|
| 468 200 | 13 32 | 613 22 | 00 | 00 | 613 95 | 73 | 63 | 01 | 616 50 |
| 18100 0 | 0 | 17795 5 | 304 5 | 0 | 2581 4 | 130 3 | 604 1 | 80 9 | 616 40 |
| 38 | 00 | 6 89 | 2 34 | 000 | 038 | 040 | 000 | 599 90 | 4847 11 |
| 002042 | 330 | 305 | 220 | 2 | 0 | 0 | 00 | 422 77 | 5294 80 |

FLOW DISTRIBUTION FOR SECNO= 468 20 CWSEL= 613 22

| STA= | 4847 | 5189 | 5213 | 5233 | 5288 | 5295 |
|---|---|---|---|---|---|---|
| PER Q= | 98 3 | 2 | 8 | 7 | 0 | |
| AREA= | 2581 4 | 15 6 | 47 3 | 66 2 | 1 1 | |
| VEL= | 6 9 | 2 3 | 3 0 | 1 9 | 5 | |
| DEPTH= | 7 8 | 7 | 2 4 | 1 2 | 2 | |

| | | | | | | | | | |
|---|---|---|---|---|---|---|---|---|---|
| SECNO | DEPTH | CWSEL | CRIWS | WSELK | EG | HV | HL | OLOSS | L-BANK ELEV |
| Q | QLOB | QCH | QROB | ALOB | ACH | AROB | VOL | TWA | R-BANK ELEV |
| TIME | VLOB | VCH | VROB | XNL | XNCH | XNR | WTN | ELMIN | SSTA |
| SLOPE | XLOBL | XLCH | XLOBR | ITRIAL | IDC | ICONT | CORAR | TOPWID | ENDST |

*SECNO 470 000

CHANNEL ENTERS CITY OF ESCONDIDO

| | | | | | | | | | |
|---|---|---|---|---|---|---|---|---|---|
| 470 000 | 13 73 | 613 53 | 00 | 00 | 614 65 | 1 12 | 58 | 12 | 622 70 |
| 18100 0 | 0 | 18100 0 | 0 | 0 | 2130 7 | 0 | 615 7 | 82 7 | 617 20 |
| 39 | 00 | 8 49 | 00 | 000 | 038 | 000 | 000 | 599 80 | 4969 31 |
| 004031 | 190 | 210 | 140 | 2 | 0 | 0 | 00 | 330 49 | 5299 80 |

FLOW DISTRIBUTION FOR SECNO= 470 00 CWSEL= 613 53

| | | |
|---|---|---|
| STA= | 4969 | 5323 |
| PER Q= | 100 0 | |
| AREA= | 2130 7 | |
| VEL= | 8 5 | |
| DEPTH= | 6 4 | |

*SECNO 470 200

3265 DIVIDED FLOW

THIS SECTION WAS ADDED TO MATCH THE CONTROL SECTION IN THE PREVIOUS
FIS DONE BY DWR (SECTION 80605)

| | | | | | | | | | |
|---|---|---|---|---|---|---|---|---|---|
| 470 200 | 14 58 | 614 48 | 00 | 00 | 615 34 | 86 | 66 | 03 | 622 80 |
| 18100 0 | 995 9 | 10443 7 | 6660 4 | 246 0 | 1471 3 | 798 6 | 625 3 | 84 3 | 617 70 |
| 39 | 4 05 | 7 10 | 8 34 | 050 | 038 | 040 | 000 | 599 90 | 4766 20 |
| 003422 | 210 | 185 | 150 | 3 | 0 | 0 | 00 | 460 40 | 5438 34 |

FLOW DISTRIBUTION FOR SECNO= 470 20 CWSEL= 614 48

| | | | | | | | | | | |
|---|---|---|---|---|---|---|---|---|---|---|
| STA= | 4766 | 4784 | 4827 | 4841 | 5297 | 5333 | 5354 | 5383 | 5408 | 5438 |
| PER Q= | 6 | 4 5 | 4 | 57 7 | 1 3 | 8 5 | 15 2 | 9 3 | 2 5 | |
| AREA= | 37 7 | 180 1 | 28 2 | 1471 3 | 49 6 | 173 5 | 280 7 | 196 5 | 98 3 | |
| VEL= | 2 8 | 4 5 | 2 7 | 7 1 | 4 6 | 8 9 | 9 8 | 8 5 | 4 7 | |
| DEPTH= | 2 1 | 4 2 | 2 0 | 5 5 | 1 4 | 8 4 | 9 6 | 7 8 | 3 2 | |

*SECNO 472 000

3265 DIVIDED FLOW

| | | | | | | | | | |
|---|---|---|---|---|---|---|---|---|---|
| 472 000 | 14 60 | 615 20 | 00 | 00 | 615 82 | 63 | 46 | 02 | 618 30 |
| 18100 0 | 410 8 | 11687 5 | 6001 7 | 202 7 | 1859 1 | 896 7 | 635 8 | 86 5 | 617 30 |
| 40 | 2 03 | 6 29 | 6 69 | 050 | 038 | 040 | 000 | 600 60 | 4578 03 |
| 002333 | 200 | 185 | 120 | 2 | 0 | 0 | 00 | 629 33 | 5464 33 |

| | | | | | | | | | |
|---|---|---|---|---|---|---|---|---|---|
| SECNO | DEPTH | CWSEL | CRIWS | WSELK | EG | HV | HL | OLOSS | L-BANK ELEV |
| Q | QLOB | QCH | QROB | ALOB | ACH | AROB | VOL | TWA | R-BANK ELEV |
| TIME | VLOB | VCH | VROB | XNL | XNCH | XNR | WTN | ELMIN | SSTA |
| SLOPE | XLOBL | XLCH | XLOBR | ITRIAL | IDC | ICONT | CORAR | TOPWID | ENDST |

FLOW DISTRIBUTION FOR SECNO= 472 00 CWSEL= 615 20

| STA= | 4578 | 4868 | 5268 | 5332 | 5359 | 5385 | 5402 | 5464 |
|---|---|---|---|---|---|---|---|---|
| PER Q= | 2 3 | 64 6 | 3 3 | 9 2 | 12 3 | 5 8 | 2 7 | |
| AREA= | 202 7 | 1859 1 | 139 1 | 225 0 | 263 0 | 143 6 | 126 1 | |
| VEL= | 2 0 | 6 3 | 4 2 | 7 4 | 8 4 | 7 3 | 3 9 | |
| DEPTH= | 7 | 6 2 | 2 2 | 8 4 | 10 2 | 8 4 | 2 0 | |

*SECNO 474 000

3265 DIVIDED FLOW

| | | | | | | | | | |
|---|---|---|---|---|---|---|---|---|---|
| 474 000 | 15 07 | 616 17 | 00 | 00 | 616 59 | 42 | 75 | 02 | 619 60 |
| 18000 0 | 316 7 | 13095 6 | 4587 7 | 255 9 | 2380 3 | 1060 7 | 669 7 | 93 7 | 619 80 |
| 42 | 1 24 | 5 50 | 4 33 | 050 | 038 | 040 | 000 | 601 10 | 4531 92 |
| 001260 | 448 | 443 | 448 | 2 | 0 | 0 | 00 | 781 84 | 5427 10 |

FLOW DISTRIBUTION FOR SECNO= 474 00 CWSEL= 616 17

| STA= | 4532 | 4782 | 5180 | 5263 | 5306 | 5329 | 5396 | 5427 |
|---|---|---|---|---|---|---|---|---|
| PER Q= | 1 8 | 72 8 | 6 1 | 10 2 | 5 3 | 3 7 | 1 | |
| AREA= | 255 9 | 2380 3 | 300 5 | 348 2 | 181 8 | 212 2 | 18 0 | |
| VEL= | 1 2 | 5 5 | 3 7 | 5 3 | 5 3 | 3 2 | 9 | |
| DEPTH= | 1 0 | 8 1 | 3 6 | 8 0 | 8 0 | 3 2 | 6 | |

*SECNO 476 000

3265 DIVIDED FLOW

3301 HV CHANGED MORE THAN HVINS

U/S LIMIT OF STUDY

| | | | | | | | | | |
|---|---|---|---|---|---|---|---|---|---|
| 476 000 | 15 43 | 616 63 | 00 | 00 | 617 55 | 93 | 81 | 15 | 621 10 |
| 18000 0 | 72 8 | 15830 7 | 2096 5 | 71 4 | 1972 4 | 414 1 | 702 7 | 100 5 | 621 30 |
| 44 | 1 02 | 8 03 | 5 06 | 050 | 038 | 040 | 000 | 601 20 | 4668 74 |
| 002539 | 472 | 467 | 465 | 2 | 0 | 0 | 00 | 483 04 | 5234 97 |

| | | | | | | | | | |
|---|---|---|---|---|---|---|---|---|---|
| SECNO | DEPTH | CWSEL | CRIWS | WSELK | EG | HV | HL | OLOSS | L-BANK ELEV |
| Q | QLOB | QCH | QROB | ALOB | ACH | AROB | VOL | TWA | R-BANK ELEV |
| TIME | VLOB | VCH | VROB | XNL | XNCH | XNR | WTN | ELMIN | SSTA |
| SLOPE | XLOBL | XLCH | XLOBR | ITRIAL | IDC | ICONT | CORAR | TOPWID | ENDST |

FLOW DISTRIBUTION FOR SECNO= 476 00 CWSEL= 616 63

| STA= | 4669 | 4731 | 4763 | 4800 | 4803 | 5103 | 5129 | 5134 | 5169 | 5207 | 5235 |
|---|---|---|---|---|---|---|---|---|---|---|---|
| PER Q= | 1 | 1 | 2 | 0 | 87 9 | 1 | 7 | 6 7 | 3 8 | 3 | |
| AREA= | 26 0 | 17 0 | 27 0 | 1 4 | 1972 4 | 10 5 | 26 8 | 199 4 | 147 4 | 30 0 | |
| VEL= | 8 | 1 0 | 1 2 | 1 0 | 8 0 | 2 4 | 4 9 | 6 0 | 4 6 | 1 9 | |
| DEPTH= | 4 | 5 | 7 | 6 | 8 3 | 4 | 4 6 | 5 8 | 3 9 | 1 1 | |

```
T1      C-DOVES COUNTY OF SAN DIEGO ZONE 1
T2      GEORGE S  NOLTE AND ASSOCIATES
T3      ESCONDIDO CK UPPER REACH - FLOODWAY

J1  ICHECK    INQ       NINV      IDIR      STRT      METRIC    HVINS     Q         WSEL      FQ

          6                                                                539 31

J2  NPROF     IPLOT     PRFVS     XSECV     XSECH     FN        ALLDC     IBW       CHNIM     ITRACE

 15             0        -1                                                          15
```

| | | | | | | | | | |
|---|---|---|---|---|---|---|---|---|---|
| SECNO | DEPTH | CWSEL | CRIWS | WSELK | EG | HV | HL | OLOSS | L-BANK ELEV |
| Q | QLOB | QCH | QROB | ALOB | ACH | AROB | VOL | TWA | R-BANK ELEV |
| TIME | VLOB | VCH | VROB | XNL | XNCH | XNR | WTN | ELMIN | SSTA |
| SLOPE | XLOBL | XLCH | XLOBR | ITRIAL | IDC | ICONT | CORAR | TOPWID | ENDST |

*PROF 2

CCHV= 100 CEHV= 300
*SECNO 400 000

3470 ENCROACHMENT STATIONS= 4907 0 5108 4 TYPE= 1 TARGET= 201 400
D/S LIMIT OF STUDY
STARTING WATER SURFACE ELEVATIONS ARE NORMAL DEPTH FOR BASE CASE
AND NORMAL DEPTH PLUS ONE FOOT FOR FLOODWAY,
SINCE PROFILE CONCURRENCE AT D/S LIMIT OF STUDY REQUIRES
SIGNIFICANT BACKWATER IN FIRST SEVERAL SECTIONS
FLOODWAY CONSISTS OF EXISTING DELINEATION WITH MODIFICATIONS
FLOODWAY IS EXPANDED WHERE REQUIRED DUE TO HIGH VELOCITY
CONDITIONS OUTSIDE EXISTING FLOODWAY
FLOODWAY IS MADE NARROWER ONLY WHERE EXISTING FLOODWAY EXCEEDS
LIMITS OF 100-YR EFFECTIVE FLOW BOUNDARY THE NARROWER
DELINEATION APPEARS ONLY IN THE DECK FOR SAKE OF COMPUTATION,
THE CHANGE WILL NOT APPEAR ON THE MAP
SEE TABLE IN BACKUP MATERIAL FOR SECTIONS AFFECTED

| | | | | | | | | | |
|---|---|---|---|---|---|---|---|---|---|
| 400 000 | 12 61 | 539 31 | 00 | 538 33 | 541 76 | 2 45 | 00 | 00 | 530 00 |
| 18700 0 | 3259 4 | 10616 1 | 4824 5 | 334 6 | 745 7 | 480 8 | 0 | 0 | 530 10 |
| 00 | 9 74 | 14 24 | 10 03 | 045 | 040 | 040 | 000 | 526 70 | 4907 00 |
| 006300 | 0 | 0 | 0 | 0 | 0 | 0 | 00 | 201 40 | 5108 40 |

FLOW DISTRIBUTION FOR SECNO= 400 00 CWSEL= 539 31

| STA= | 4907 | 4916 | 4942 | 4956 | 5025 | 5042 | 5056 | 5070 | 5095 | 5108 |
|---|---|---|---|---|---|---|---|---|---|---|
| PER Q= | 9 | 8 9 | 7 7 | 56 8 | 10 1 | 5 4 | 3 8 | 5 5 | 1 1 | |
| AREA= | 31 7 | 177 0 | 125 9 | 745 7 | 150 7 | 93 1 | 77 4 | 121 7 | 37 9 | |
| VEL= | 5 1 | 9 4 | 11 4 | 14 2 | 12 5 | 10 8 | 9 1 | 8 4 | 5 5 | |
| DEPTH= | 3 6 | 6 9 | 9 1 | 10 7 | 8 8 | 7 1 | 5 4 | 4 8 | 2 8 | |

*SECNO 402 000

3301 HV CHANGED MORE THAN HVINS

3685 20 TRIALS ATTEMPTED WSEL,CWSEL
3693 PROBABLE MINIMUM SPECIFIC ENERGY
3720 CRITICAL DEPTH ASSUMED

| | | | | | | | | | |
|---|---|---|---|---|---|---|---|---|---|
| SECNO | DEPTH | CWSEL | CRIWS | WSELK | EG | HV | HL | OLOSS | L-BANK ELEV |
| Q | QLOB | QCH | QROB | ALOB | ACH | AROB | VOL | TWA | R-BANK ELEV |
| TIME | VLOB | VCH | VROB | XNL | XNCH | XNR | WTN | ELMIN | SSTA |
| SLOPE | XLOBL | XLCH | XLOBR | ITRIAL | IDC | ICONT | CORAR | TOPWID | ENDST |

3470 ENCROACHMENT STATIONS= 4931 0 5120 0 TYPE= 1 TARGET= 189 000

| | | | | | | | | | |
|---|---|---|---|---|---|---|---|---|---|
| 402 000 | 12 34 | 542 14 | 542 14 | 542 11 | 545 57 | 3 43 | 2 27 | 29 | 534 60 |
| 18700 0 | 928 0 | 15156 0 | 2616 1 | 103 1 | 953 8 | 283 5 | 10 1 | 1 4 | 535 10 |
| 01 | 9 00 | 15 89 | 9 23 | 045 | 040 | 040 | 000 | 529 80 | 4931 00 |
| 008906 | 310 | 305 | 300 | 20 | 8 | 0 | 00 | 189 00 | 5120 00 |

FLOW DISTRIBUTION FOR SECNO= 402 00 CWSEL= 542 14

| STA= | 4931 | 4942 | 4955 | 5052 | 5061 | 5075 | 5087 | 5101 | 5118 | 5120 |
|---|---|---|---|---|---|---|---|---|---|---|
| PER Q= | 8 | 4 2 | 81 0 | 3 2 | 3 1 | 2 3 | 3 0 | 2 3 | | 1 |
| AREA= | 27 5 | 75 6 | 953 8 | 54 3 | 60 4 | 48 3 | 61 7 | 54 5 | | 4 2 |
| VEL= | 5 3 | 10 3 | 15 9 | 11 1 | 9 6 | 9 0 | 9 0 | 7 8 | | 3 7 |
| DEPTH= | 2 4 | 6 2 | 9 8 | 5 8 | 4 5 | 4 1 | 4 1 | 3 3 | | 1 8 |

*SECNO 404 000

3301 HV CHANGED MORE THAN HVINS

3470 ENCROACHMENT STATIONS= 4887 0 5090 0 TYPE= 1 TARGET= 203 000

| | | | | | | | | | |
|---|---|---|---|---|---|---|---|---|---|
| 404 000 | 13 36 | 546 36 | 00 | 546 37 | 548 60 | 2 24 | 2 92 | 12 | 544 30 |
| 18700 0 | 26 9 | 16864 4 | 1808 7 | 10 5 | 1364 3 | 219 0 | 23 9. | 3 2 | 540 40 |
| 02 | 2 55 | 12 36 | 8 26 | 045 | 040 | 040 | 000 | 533 00 | 4887 01 |
| 005878 | 450 | 409 | 390 | 2 | 0 | 0 | 00 | 202 99 | 5090 00 |

FLOW DISTRIBUTION FOR SECNO= 404 00 CWSEL= 546 36

| STA= | 4887 | 4897 | 5046 | 5058 | 5085 | 5090 |
|---|---|---|---|---|---|---|
| PER Q= | 1 | 90 2 | 3 0 | 6 2 | | 4 |
| AREA= | 10 5 | 1364 3 | 64 5 | 138 8 | 15 6 | |
| VEL= | 2 6 | 12 4 | 8 8 | 8 4 | 4 7 | |
| DEPTH= | 1 0 | 9 2 | 5 5 | 5 1 | 3 4 | |

*SECNO 406 000

3301 HV CHANGED MORE THAN HVINS

| | | | | | | | | | |
|---|---|---|---|---|---|---|---|---|---|
| SECNO | DEPTH | CWSEL | CRIWS | WSELK | EG | HV | HL | OLOSS | L-BANK ELEV |
| Q | QLOB | QCH | QROB | ALOB | ACH | AROB | VOL | TWA | R-BANK ELEV |
| TIME | VLOB | VCH | VROB | XNL | XNCH | XNR | WTN | ELMIN | SSTA |
| SLOPE | XLOBL | XLCH | XLOBR | ITRIAL | IDC | ICONT | CORAR | TOPWID | ENDST |

3302 WARNING CONVEYANCE CHANGE OUTSIDE OF ACCEPTABLE RANGE, KRATIO = 1 70

3470 ENCROACHMENT STATIONS= 4914 7 5181 5 TYPE= 1 TARGET= 266 800
CHANNEL CENTERLINE AT 5138 9

| | | | | | | | | | |
|---|---|---|---|---|---|---|---|---|---|
| 406 000 | 12 50 | 549 70 | 00 | 549 67 | 550 48 | 78 | 1 73 | 15 | 541 50 |
| 18700 0 | 10780 1 | 7919 9 | 0 | 1611 5 | 1037 5 | 0 | 50 1 | 6 1 | 100000 00 |
| 04 | 6 69 | 7 63 | 00 | 045 | 040 | 000 | 000 | 537 20 | 4914 70 |
| 002042 | 555 | 528 | 520 | 2 | 0 | 0 | 00 | 266 80 | 5181 50 |

FLOW DISTRIBUTION FOR SECNO= 406 00 CWSEL= 549 70

| STA= | 4915 | 4970 | 4984 | 5000 | 5010 | 5023 | 5080 | 5182 |
|---|---|---|---|---|---|---|---|---|
| PER Q= | 15 3 | 5 3 | 7 4 | 4 8 | 5 8 | 19 0 | 42 4 | |
| AREA= | 492 6 | 142 0 | 180 9 | 114 9 | 146 6 | 534 5 | 1037 5 | |
| VEL= | 5 8 | 7 0 | 7 6 | 7 9 | 7 4 | 6 6 | 7 6 | |
| DEPTH= | 8 8 | 10 1 | 11 6 | 12 1 | 11 2 | 9 4 | 10 2 | |

*SECNO 408 000

3470 ENCROACHMENT STATIONS= 4801 2 5080 7 TYPE= 1 TARGET= 279 500

| | | | | | | | | | |
|---|---|---|---|---|---|---|---|---|---|
| 408 000 | 11 70 | 550 50 | 00 | 550 27 | 551 63 | 1 13 | 1 05 | 10 | 544 80 |
| 18700 0 | 8304 5 | 10395 5 | 0 | 1064 0 | 1148 4 | 0 | 71 8 | 8 5 | 100000 00 |
| 05 | 7 81 | 9 05 | 00 | 045 | 040 | 000 | 000 | 538 80 | 4801 20 |
| 003690 | 400 | 378 | 365 | 2 | 0 | 0 | 00 | 279 50 | 5080 70 |

FLOW DISTRIBUTION FOR SECNO= 408 00 CWSEL= 550 50

| STA= | 4801 | 4821 | 4840 | 4940 | 5081 |
|---|---|---|---|---|---|
| PER Q= | 2 6 | 6 6 | 35 2 | 55 6 | |
| AREA= | 95 6 | 157 7 | 810 6 | 1148 4 | |
| VEL= | 5 1 | 7 8 | 8 1 | 9 1 | |
| DEPTH= | 4 9 | 8 0 | 8 2 | 8 2 | |

*SECNO 410 000

3265 DIVIDED FLOW

| | | | | | | | | | |
|---|---|---|---|---|---|---|---|---|---|
| SECNO | DEPTH | CWSEL | CRIWS | WSELK | EG | HV | HL | OLOSS | L-BANK ELEV |
| Q | QLOB | QCH | QROB | ALOB | ACH | AROB | VOL | TWA | R-BANK ELEV |
| TIME | VLOB | VCH | VROB | XNL | XNCH | XNR | WTN | ELMIN | SSTA |
| SLOPE | XLOBL | XLCH | XLOBR | ITRIAL | IDC | ICONT | CORAR | TOPWID | ENDST |

3301 HV CHANGED MORE THAN HVINS

3685 20 TRIALS ATTEMPTED WSEL,CWSEL
3693 PROBABLE MINIMUM SPECIFIC ENERGY
3720 CRITICAL DEPTH ASSUMED

3470 ENCROACHMENT STATIONS= 4789 9 5062 1 TYPE= 1 TARGET= 272 200

| | | | | | | | | | |
|---|---|---|---|---|---|---|---|---|---|
| 410 000 | 14 48 | 552 88 | 552 88 | 553 03 | 556 29 | 3 41 | 2 64 | 68 | 548 40 |
| 18700 0 | 2620 3 | 16079 7 | 0 | 380 2 | 1022 1 | 0 | 92 9 | 11 6 | 100000 00 |
| 06 | 6 89 | 15 73 | 00 | 045 | 040 | 000 | 000 | 538 40 | 4789 90 |
| 008001 | 535 | 492 | 460 | 20 | 11 | 0 | 00 | 232 03 | 5062 10 |

FLOW DISTRIBUTION FOR SECNO= 410 00 CWSEL= 552 88

| STA= | 4790 | 4806 | 4816 | 4827 | 4851 | 4882 | 4944 | 4970 | 5062 |
|---|---|---|---|---|---|---|---|---|---|
| PER Q= | 0 | 5 | 1 7 | 6 1 | 3 0 | 2 | 2 5 | 86 0 | |
| AREA= | 4 4 | 20 5 | 43 4 | 125 8 | 92 5 | 16 1 | 77 5 | 1022 1 | |
| VEL= | 1 3 | 4 4 | 7 4 | 9 0 | 6 1 | 2 4 | 6 1 | 15 7 | |
| DEPTH= | 3 | 1 9 | 4 0 | 5 3 | 3 0 | 3 | 3 0 | 11 1 | |

*SECNO 412 000

3301 HV CHANGED MORE THAN HVINS

3302 WARNING CONVEYANCE CHANGE OUTSIDE OF ACCEPTABLE RANGE, KRATIO = 2 60

3470 ENCROACHMENT STATIONS= 4830 0 5150 0 TYPE= 1 TARGET= 320 000

| | | | | | | | | | |
|---|---|---|---|---|---|---|---|---|---|
| 412 000 | 16 83 | 557 33 | 00 | 557 18 | 558 00 | 67 | 1 44 | 27 | 551 20 |
| 18700 0 | 1388 2 | 17252 0 | 59 8 | 462 3 | 2546 4 | 27 3 | 122 4 | 15 2 | 551 80 |
| 08 | 3 00 | 6 78 | 2 19 | 045 | 040 | 045 | 000 | 540 50 | 4830 00 |
| 001185 | 540 | 587 | 627 | 2 | 0 | 0 | 00 | 320 00 | 5150 00 |

FLOW DISTRIBUTION FOR SECNO= 412 00 CWSEL= 557 33

| STA= | 4830 | 4838 | 4870 | 4901 | 4922 | 4938 | 5145 | 5150 |
|---|---|---|---|---|---|---|---|---|
| PER Q= | 3 | 1 7 | 1 9 | 1 8 | 1 7 | 92 3 | 3 | |
| AREA= | 26 3 | 119 1 | 124 3 | 103 3 | 89 3 | 2546 4 | 27 3 | |
| VEL= | 2 1 | 2 7 | 2 9 | 3 2 | 3 6 | 6 8 | 2 2 | |
| DEPTH= | 3 5 | 3 7 | 4 0 | 4 8 | 5 6 | 12 3 | 5 2 | |

| | | | | | | | | | |
|---|---|---|---|---|---|---|---|---|---|
| SECNO | DEPTH | CWSEL | CRIWS | WSELK | EG | HV | HL | OLOSS | L-BANK ELEV |
| Q | QLOB | QCH | QROB | ALOB | ACH | AROB | VOL | TWA | R-BANK ELEV |
| TIME | VLOB | VCH | VROB | XNL | XNCH | XNR | WTN | ELMIN | SSTA |
| SLOPE | XLOBL | XLCH | XLOBR | ITRIAL | IDC | ICONT | CORAR | TOPWID | ENDST |

*SECNO 414 000

3301 HV CHANGED MORE THAN HVINS

3302 WARNING CONVEYANCE CHANGE OUTSIDE OF ACCEPTABLE RANGE, KRATIO = 52

3470 ENCROACHMENT STATIONS= 4897 1 5165 0 TYPE= 1 TARGET= 267 900

| | | | | | | | | | |
|---|---|---|---|---|---|---|---|---|---|
| 414 000 | 14 62 | 557 92 | 00 | 557 75 | 559 62 | 1 71 | 1 31 | 31 | 549 80 |
| 18700 0 | 2892 0 | 11678 6 | 4129 4 | 392 3 | 969 2 | 590 7 | 158 4 | 19 4 | 551 70 |
| 10 | 7 37 | 12 05 | 6 99 | 045 | 040 | 045 | 000 | 543 30 | 4897 10 |
| 004465 | 500 | 630 | 800 | 3 | 0 | 0 | 00 | 267 90 | 5165 00 |

FLOW DISTRIBUTION FOR SECNO= 414 00 CWSEL= 557 92

| STA= | 4897 | 4944 | 4967 | 5056 | 5077 | 5136 | 5162 | 5165 |
|---|---|---|---|---|---|---|---|---|
| PER Q= | 6 7 | 8 8 | 62 5 | 5 4 | 14 1 | 2 6 | 1 | |
| AREA= | 207 9 | 184 4 | 969 2 | 133 2 | 360 1 | 92 4 | 5 0 | |
| VEL= | 6 0 | 8 9 | 12 0 | 7 6 | 7 3 | 5 2 | 2 3 | |
| DEPTH= | 4 4 | 8 1 | 10 9 | 6 4 | 6 0 | 3 6 | 1 6 | |

*SECNO 416 000
7185 MINIMUM SPECIFIC ENERGY
3720 CRITICAL DEPTH ASSUMED

3470 ENCROACHMENT STATIONS= 4800 2 5245 0 TYPE= 1 TARGET= 444 800

| | | | | | | | | | |
|---|---|---|---|---|---|---|---|---|---|
| 416 000 | 12 58 | 562 58 | 562 58 | 562 73 | 564 73 | 2 14 | 3 43 | 13 | 556 90 |
| 18700 0 | 8902 6 | 8556 7 | 1240 7 | 820 7 | 644 3 | 280 3 | 188 8 | 25 2 | 560 60 |
| 12 | 10 85 | 13 28 | 4 43 | 030 | 035 | 030 | 000 | 550 00 | 4800 76 |
| 005129 | 720 | 720 | 700 | 4 | 9 | 0 | 00 | 444 24 | 5245 00 |

FLOW DISTRIBUTION FOR SECNO= 416 00 CWSEL= 562 58

| STA= | 4801 | 4816 | 4844 | 4866 | 4908 | 4942 | 4960 | 5027 | 5052 | 5111 | 5169 | 5212 | 5245 |
|---|---|---|---|---|---|---|---|---|---|---|---|---|---|
| PER Q= | 8 | 8 6 | 9 1 | 13 4 | 9 7 | 6 0 | 45 8 | 1 3 | 2 4 | 1 8 | 9 | 2 | |
| AREA= | 28 5 | 149 5 | 140 0 | 229 3 | 171 5 | 102 0 | 644 3 | 46 0 | 94 5 | 77 5 | 44 3 | 18 0 | |
| VEL= | 5 3 | 10 7 | 12 1 | 11 0 | 10 6 | 11 0 | 13 3 | 5 4 | 4 8 | 4 3 | 3 6 | 2 4 | |
| DEPTH= | 1 9 | 5 3 | 6 3 | 5 4 | 5 1 | 5 5 | 9 7 | 1 9 | 1 6 | 1 3 | 1 0 | 5 | |

| | | | | | | | | | |
|---|---|---|---|---|---|---|---|---|---|
| SECNO | DEPTH | CWSEL | CRIWS | WSELK | EG | HV | HL | OLOSS | L-BANK ELEV |
| Q | QLOB | QCH | QROB | ALOB | ACH | AROB | VOL | TWA | R-BANK ELEV |
| TIME | VLOB | VCH | VROB | XNL | XNCH | XNR | WTN | ELMIN | SSTA |
| SLOPE | XLOBL | XLCH | XLOBR | ITRIAL | IDC | ICONT | CORAR | TOPWID | ENDST |

*SECNO 418 000

3301 HV CHANGED MORE THAN HVINS

3302 WARNING CONVEYANCE CHANGE OUTSIDE OF ACCEPTABLE RANGE, KRATIO = 1 48

3470 ENCROACHMENT STATIONS= 4714 0 5055 0 TYPE= 1 TARGET= 341 000

| | | | | | | | | | |
|---|---|---|---|---|---|---|---|---|---|
| 418 000 | 13 90 | 565 40 | 00 | 565 40 | 566 60 | 1 20 | 1 78 | 09 | 558 40 |
| 18700 0 | 10982 3 | 6790 2 | 927 5 | 1390 6 | 662 1 | 135 8 | 212 8 | 29 9 | 559 10 |
| 14 | 7 90 | 10 26 | 6 83 | 030 | 035 | 030 | 000 | 551 50 | 4714 00 |
| 002349 | 535 | 532 | 520 | 2 | 0 | 0 | 00 | 341 00 | 5055 00 |

FLOW DISTRIBUTION FOR SECNO= 418 00 CWSEL= 565 40

| STA= | 4714 | 4741 | 4781 | 4845 | 4907 | 4951 | 4973 | 5029 | 5048 | 5055 |
|---|---|---|---|---|---|---|---|---|---|---|
| PER Q= | 8 | 3 2 | 12 8 | 19 8 | 14 8 | 7 3 | 36 3 | 4 2 | 7 | |
| AREA= | 44 2 | 121 1 | 332 6 | 424 6 | 312 6 | 155 5 | 662 1 | 106 9 | 28 9 | |
| VEL= | 3 2 | 5 0 | 7 2 | 8 7 | 8 9 | 8 8 | 10 3 | 7 4 | 4 6 | |
| DEPTH= | 1 6 | 3 0 | 5 2 | 6 9 | 7 1 | 7 0 | 11 9 | 5 5 | 4 3 | |

*SECNO 420 000

3301 HV CHANGED MORE THAN HVINS

3302 WARNING CONVEYANCE CHANGE OUTSIDE OF ACCEPTABLE RANGE, KRATIO = 67

3470 ENCROACHMENT STATIONS= 4899 5 5237 3 TYPE= 1 TARGET= 337 800

| | | | | | | | | | |
|---|---|---|---|---|---|---|---|---|---|
| 420 000 | 13 48 | 566 18 | 00 | 566 37 | 568 40 | 2 22 | 1 49 | 31 | 561 80 |
| 18700 0 | 876 8 | 7564 5 | 10258 7 | 131 4 | 521 3 | 1017 6 | 232 4 | 33 4 | 559 60 |
| 15 | 6 67 | 14 51 | 10 08 | 030 | 035 | 030 | 000 | 552 70 | 4904 20 |
| 005224 | 400 | 432 | 505 | 3 | 0 | 0 | 00 | 333 10 | 5237 30 |

FLOW DISTRIBUTION FOR SECNO= 420 00 CWSEL= 566 18

| STA= | 4904 | 4914 | 4949 | 4972 | 5015 | 5032 | 5070 | 5101 | 5188 | 5209 | 5237 |
|---|---|---|---|---|---|---|---|---|---|---|---|
| PER Q= | 0 | 1 2 | 3 5 | 40 5 | 6 8 | 12 4 | 8 4 | 20 0 | 4 7 | 2 6 | |
| AREA= | 1 9 | 50 2 | 79 4 | 521 3 | 106 2 | 208 5 | 152 0 | 386 9 | 91 3 | 72 7 | |
| VEL= | 1 2 | 4 6 | 8 1 | 14 5 | 12 0 | 11 1 | 10 3 | 9 7 | 9 6 | 6 6 | |
| DEPTH= | 2 | 1 4 | 3 4 | 12 2 | 6 1 | 5 5 | 4 9 | 4 4 | 4 4 | 2 6 | |

| | | | | | | | | | |
|---|---|---|---|---|---|---|---|---|---|
| SECNO | DEPTH | CWSEL | CRIWS | WSELK | EG | HV | HL | OLOSS | L-BANK ELEV |
| Q | QLOB | QCH | QROB | ALOB | ACH | AROB | VOL | TWA | R-BANK ELEV |
| TIME | VLOB | VCH | VROB | XNL | XNCH | XNR | WTN | ELMIN | SSTA |
| SLOPE | XLOBL | XLCH | XLOBR | ITRIAL | IDC | ICONT | CORAR | TOPWID | ENDST |

*SECNO 422 000

3301 HV CHANGED MORE THAN HVINS

3470 ENCROACHMENT STATIONS= 4821 5 5231 0 TYPE= 1 TARGET= 409 500

| | | | | | | | | | |
|---|---|---|---|---|---|---|---|---|---|
| 422 000 | 15 69 | 568 19 | 00 | 568 09 | 569 48 | 1 28 | 98 | 09 | 560 30 |
| 18200 0 | 2559 0 | 7134 0 | 8507 0 | 393 3 | 639 0 | 1104 3 | 244 3 | 35 7 | 561 00 |
| 15 | 6 51 | 11 16 | 7 70 | 030 | 035 | 030 | 000 | 552 50 | 4821 50 |
| 002595 | 252 | 262 | 285 | 4 | 0 | 0 | 00 | 409 50 | 5231 00 |

FLOW DISTRIBUTION FOR SECNO= 422 00 CWSEL= 568 19

| STA= | 4822 | 4864 | 4916 | 4940 | 4965 | 4973 | 5022 | 5047 | 5075 | 5121 | 5181 | 5225 | 5231 |
|---|---|---|---|---|---|---|---|---|---|---|---|---|---|
| PER Q= | 2 | 1 6 | 2 7 | 6 3 | 3 3 | 39 2 | 8 7 | 7 0 | 9 5 | 13 4 | 7 7 | 6 | |
| AREA= | 19 1 | 85 3 | 84 7 | 141 3 | 62 9 | 639 0 | 172 3 | 158 3 | 233 0 | 318 1 | 199 8 | 22 8 | |
| VEL= | 1 5 | 3 5 | 5 7 | 8 1 | 9 6 | 11 2 | 9 1 | 8 0 | 7 4 | 7 7 | 7 0 | 4 5 | |
| DEPTH= | 5 | 1 6 | 3 4 | 5 7 | 7 5 | 13 1 | 6 9 | 5 7 | 5 0 | 5 3 | 4 6 | 3 6 | |

CCHV= 300 CEHV= 500

*SECNO 428 000

3470 ENCROACHMENT STATIONS= 4814 6 5208 0 TYPE= 1 TARGET= 393 400

| | | | | | | | | | |
|---|---|---|---|---|---|---|---|---|---|
| 428 000 | 15 96 | 568 76 | 00 | 568 71 | 569 70 | 94 | 12 | 10 | 559 30 |
| 18200 0 | 3554 6 | 10893 9 | 3751 5 | 586 8 | 1228 0 | 678 2 | 247 7 | 36 3 | 562 80 |
| 16 | 6 06 | 8 87 | 5 53 | 030 | 035 | 030 | 000 | 552 80 | 4814 60 |
| 001494 | 70 | 62 | 60 | 2 | 0 | 0 | 00 | 393 40 | 5208 00 |

FLOW DISTRIBUTION FOR SECNO= 428 00 CWSEL= 568 76

| STA= | 4815 | 4865 | 4900 | 4939 | 4958 | 4977 | 5072 | 5096 | 5138 | 5189 | 5208 |
|---|---|---|---|---|---|---|---|---|---|---|---|
| PER Q= | 3 | 1 2 | 4 9 | 5 5 | 7 6 | 59 9 | 4 5 | 6 4 | 7 8 | 2 0 | |
| AREA= | 36 1 | 72 5 | 173 7 | 137 7 | 166 8 | 1228 0 | 137 3 | 206 6 | 253 7 | 80 5 | |
| VEL= | 1 5 | 3 1 | 5 2 | 7 2 | 8 3 | 8 9 | 6 0 | 5 6 | 5 6 | 4 4 | |
| DEPTH= | 7 | 2 1 | 4 5 | 7 4 | 9 0 | 12 9 | 5 5 | 5 0 | 5 0 | 4 2 | |

*SECNO 429 000

| | | | | | | | | | |
|---|---|---|---|---|---|---|---|---|---|
| SECNO | DEPTH | CWSEL | CRIWS | WSELK | EG | HV | HL | OLOSS | L-BANK ELEV |
| Q | QLOB | QCH | QROB | ALOB | ACH | AROB | VOL | TWA | R-BANK ELEV |
| TIME | VLOB | VCH | VROB | XNL | XNCH | XNR | WTN | ELMIN | SSTA |
| SLOPE | XLOBL | XLCH | XLOBR | ITRIAL | IDC | ICONT | CORAR | TOPWID | ENDST |

3301 HV CHANGED MORE THAN HVINS

3302 WARNING CONVEYANCE CHANGE OUTSIDE OF ACCEPTABLE RANGE, KRATIO = 55

3470 ENCROACHMENT STATIONS= 4828 0 5204 0 TYPE= 1 TARGET= 376 000
COUNTRY CLUB ROAD - DIP SECTION - CULVERT AREA 38 1 SQ FT
MODELED AS SECTION OVER T O R (W/O CULVERTS)
100-YR FLOWRATE REDUCED BY 260 CFS TO ACCOUNT FOR CULVERT FLOW

| | | | | | | | | | |
|---|---|---|---|---|---|---|---|---|---|
| 429 000 | 7 63 | 568 53 | 00 | 568 47 | 570 14 | 1 61 | 10 | 33 | 561 60 |
| 17940 0 | 3957 2 | 7547 2 | 6435 5 | 429 8 | 693 1 | 652 2 | 249 7 | 36 6 | 561 80 |
| 16 | 9 21 | 10 89 | 9 87 | 030 | 035 | 030 | 000 | 560 90 | 4828 00 |
| 004713 | 35 | 47 | 38 | 2 | 0 | 0 | 00 | 376 00 | 5204 00 |

FLOW DISTRIBUTION FOR SECNO= 429 00 CWSEL= 568 53

| STA= | 4828 | 4849 | 4899 | 4937 | 4962 | 5058 | 5096 | 5127 | 5169 | 5204 |
|---|---|---|---|---|---|---|---|---|---|---|
| PER Q= | 1 | 2 5 | 8 7 | 10 8 | 42 1 | 15 5 | 9 4 | 8 8 | 2 1 | |
| AREA= | 6 1 | 89 5 | 169 5 | 164 7 | 693 1 | 240 0 | 162 0 | 179 1 | 71 0 | |
| VEL= | 1 5 | 5 0 | 9 2 | 11 8 | 10 9 | 11 6 | 10 4 | 8 8 | 5 4 | |
| DEPTH= | 3 | 1 8 | 4 5 | 6 4 | 7 2 | 6 3 | 5 4 | 4 2 | 2 0 | |

*SECNO 430 000

3470 ENCROACHMENT STATIONS= 4819 0 5182 0 TYPE= 1 TARGET= 363 000

| | | | | | | | | | |
|---|---|---|---|---|---|---|---|---|---|
| 430 000 | 12 14 | 569 24 | 00 | 569 24 | 570 36 | 1 12 | 08 | 15 | 560 00 |
| 18200 0 | 5167 7 | 7135 0 | 5897 3 | 804 3 | 655 2 | 905 3 | 250 6 | 36 8 | 560 30 |
| 16 | 6 42 | 10 89 | 6 51 | 045 | 040 | 045 | 000 | 557 10 | 4819 00 |
| 003417 | 20 | 20 | 20 | 4 | 0 | 0 | 00 | 363 00 | 5182 00 |

FLOW DISTRIBUTION FOR SECNO= 430 00 CWSEL= 569 24

| STA= | 4819 | 4860 | 4899 | 4941 | 4971 | 5029 | 5047 | 5085 | 5126 | 5173 | 5182 |
|---|---|---|---|---|---|---|---|---|---|---|---|
| PER Q= | 1 8 | 5 0 | 10 2 | 11 3 | 39 2 | 6 7 | 11 0 | 8 3 | 5 8 | 6 | |
| AREA= | 97 8 | 176 0 | 273 1 | 257 5 | 655 2 | 152 8 | 276 7 | 242 5 | 203 4 | 29 8 | |
| VEL= | 3 4 | 5 2 | 6 8 | 8 0 | 10 9 | 8 0 | 7 2 | 6 3 | 5 2 | 3 5 | |
| DEPTH= | 2 4 | 4 4 | 6 6 | 8 4 | 11 4 | 8 4 | 7 2 | 5 8 | 4 4 | 3 2 | |

| | | | | | | | | | |
|---|---|---|---|---|---|---|---|---|---|
| SECNO | DEPTH | CWSEL | CRIWS | WSELK | EG | HV | HL | OLOSS | L-BANK ELEV |
| Q | QLOB | QCH | QROB | ALOB | ACH | AROB | VOL | TWA | R-BANK ELEV |
| TIME | VLOB | VCH | VROB | XNL | XNCH | XNR | WTN | ELMIN | SSTA |
| SLOPE | XLOBL | XLCH | XLOBR | ITRIAL | IDC | ICONT | CORAR | TOPWID | ENDST |

CCHV= 100 CEHV= 300

*SECNO 432 000

3265 DIVIDED FLOW

3301 HV CHANGED MORE THAN HVINS

3685 20 TRIALS ATTEMPTED WSEL,CWSEL

3693 PROBABLE MINIMUM SPECIFIC ENERGY

3720 CRITICAL DEPTH ASSUMED

3470 ENCROACHMENT STATIONS= 4816 5 5144 0 TYPE= 1 TARGET= 327 500

| | | | | | | | | | |
|---|---|---|---|---|---|---|---|---|---|
| 432 000 | 11 94 | 570 14 | 570 14 | 570 14 | 572 77 | 2 63 | 22 | 45 | 562 10 |
| 18200 0 | 4203 5 | 11904 5 | 2092 1 | 550 5 | 784 6 | 303 0 | 252 7 | 37 2 | 564 40 |
| 16 | 7 64 | 15 17 | 6 90 | 045 | 040 | 045 | 000 | 558 20 | 4816 50 |
| 007585 | 48 | 44 | 42 | 20 | 5 | 0 | 00 | 318 39 | 5144 00 |

FLOW DISTRIBUTION FOR SECNO= 432 00 CWSEL= 570 14

| STA= | 4817 | 4864 | 4909 | 4922 | 4941 | 4953 | 4965 | 5040 | 5053 | 5096 | 5130 | 5144 |
|---|---|---|---|---|---|---|---|---|---|---|---|---|
| PER Q= | 5 7 | 9 3 | 8 | 1 | 2 0 | 5 1 | 65 4 | 3 6 | 6 7 | 1 1 | 1 | |
| AREA= | 164 7 | 211 0 | 29 8 | 8 1 | 51 9 | 85 0 | 784 6 | 70 6 | 170 5 | 51 4 | 10 5 | |
| VEL= | 6 3 | 8 1 | 4 9 | 2 5 | 7 1 | 10 9 | 15 2 | 9 3 | 7 2 | 3 7 | 2 3 | |
| DEPTH= | 3 4 | 4 7 | 2 4 | 4 | 4 2 | 7 4 | 10 4 | 5 8 | 3 9 | 1 5 | 8 | |

*SECNO 434 000

3685 20 TRIALS ATTEMPTED WSEL,CWSEL

3693 PROBABLE MINIMUM SPECIFIC ENERGY

3720 CRITICAL DEPTH ASSUMED

3470 ENCROACHMENT STATIONS= 4845 0 5106 2 TYPE= 1 TARGET= 261 200

| | | | | | | | | | |
|---|---|---|---|---|---|---|---|---|---|
| 434 000 | 14 96 | 572 76 | 572 76 | 572 76 | 575 61 | 2 85 | 1 12 | 06 | 565 30 |
| 18200 0 | 5080 6 | 11442 6 | 1676 8 | 633 8 | 714 5 | 245 9 | 258 1 | 38 1 | 567 60 |
| 16 | 8 02 | 16 01 | 6 82 | 045 | 040 | 045 | 000 | 557 80 | 4845 00 |
| 007238 | 125 | 161 | 155 | 20 | 11 | 0 | 00 | 261 20 | 5106 20 |

FLOW DISTRIBUTION FOR SECNO= 434 00 CWSEL= 572 76

| | | | | | | | | | |
|---|---|---|---|---|---|---|---|---|---|
| SECNO | DEPTH | CWSEL | CRIWS | WSELK | EG | HV | HL | OLOSS | L-BANK ELEV |
| Q | QLOB | QCH | QROB | ALOB | ACH | AROB | VOL | TWA | R-BANK ELEV |
| TIME | VLOB | VCH | VROB | XNL | XNCH | XNR | WTN | ELMIN | SSTA |
| SLOPE | XLOBL | XLCH | XLOBR | ITRIAL | IDC | ICONT | CORAR | TOPWID | ENDST |

| STA= | 4845 | 4868 | 4920 | 4954 | 4978 | 5037 | 5052 | 5074 | 5095 | 5106 |
|---|---|---|---|---|---|---|---|---|---|---|
| PER Q= | 3 0 | 8 7 | 7 7 | 8 6 | 62 9 | 3 1 | 3 4 | 2 4 | 3 | |
| AREA= | 87 7 | 216 5 | 170 0 | 159 6 | 714 5 | 71 4 | 88 0 | 69 3 | 17 3 | |
| VEL= | 6 2 | 7 3 | 8 2 | 9 8 | 16 0 | 7 8 | 7 0 | 6 3 | 3 6 | |
| DEPTH= | 3 9 | 4 2 | 5 0 | 6 5 | 12 2 | 4 7 | 4 0 | 3 4 | 1 5 | |

*SECNO 436 000

3301 HV CHANGED MORE THAN HVINS

3685 20 TRIALS ATTEMPTED WSEL,CWSEL
3693 PROBABLE MINIMUM SPECIFIC ENERGY
3720 CRITICAL DEPTH ASSUMED

3470 ENCROACHMENT STATIONS= 4944 9 5074 2 TYPE= 1 TARGET= 129 300

| | | | | | | | | | |
|---|---|---|---|---|---|---|---|---|---|
| 436 000 | 12 91 | 576 31 | 576 31 | 576 36 | 580 77 | 4 46 | 3 32 | 48 | 571 10 |
| 18200 0 | 510 4 | 13225 6 | 4464 1 | 68 3 | 727 5 | 328 5 | 270 1 | 39 8 | 567 30 |
| 17 | 7 47 | 18 18 | 13 59 | 045 | 040 | 045 | 000 | 563 40 | 4944 90 |
| 010538 | 385 | 384 | 380 | 20 | 15 | 0 | 00 | 129 27 | 5074 17 |

FLOW DISTRIBUTION FOR SECNO= 436 00 CWSEL= 576 31

| STA= | 4945 | 4963 | 5032 | 5061 | 5074 |
|---|---|---|---|---|---|
| PER Q= | 2 8 | 72 7 | 21 8 | 2 7 | |
| AREA= | 68 3 | 727 5 | 268 8 | 59 8 | |
| VEL= | 7 5 | 18 2 | 14 8 | 8 2 | |
| DEPTH= | 3 7 | 10 6 | 9 1 | 4 6 | |

*SECNO 438 000

3301 HV CHANGED MORE THAN HVINS

3302 WARNING CONVEYANCE CHANGE OUTSIDE OF ACCEPTABLE RANGE, KRATIO = 2 50

3470 ENCROACHMENT STATIONS= 4900 0 5130 3 TYPE= 1 TARGET= 230 300

| | | | | | | | | | |
|---|---|---|---|---|---|---|---|---|---|
| 438 000 | 17 09 | 581 49 | 00 | 581 45 | 582 43 | 94 | 1 31 | 35 | 571 70 |
| 18200 0 | 1360 6 | 14451 7 | 2387 7 | 274 2 | 1745 0 | 436 9 | 285 7 | 41 4 | 573 00 |
| 18 | 4 96 | 8 28 | 5 46 | 045 | 040 | 045 | 000 | 564 40 | 4900 00 |
| 001682 | 375 | 383 | 373 | 2 | 0 | 0 | 00 | 230 30 | 5130 30 |

| | | | | | | | | | |
|---|---|---|---|---|---|---|---|---|---|
| SECNO | DEPTH | CWSEL | CRIWS | WSELK | EG | HV | HL | OLOSS | L-BANK ELEV |
| Q | QLOB | QCH | QROB | ALOB | ACH | AROB | VOL | TWA | R-BANK ELEV |
| TIME | VLOB | VCH | VROB | XNL | XNCH | XNR | WTN | ELMIN | SSTA |
| SLOPE | XLOBL | XLCH | XLOBR | ITRIAL | IDC | ICONT | CORAR | TOPWID | ENDST |

FLOW DISTRIBUTION FOR SECNO= 438 00 CWSEL= 581 49

| STA= | 4900 | 4913 | 4938 | 5074 | 5089 | 5106 | 5124 | 5130 |
|---|---|---|---|---|---|---|---|---|
| PER Q= | 1 3 | 6 2 | 79 4 | 3 8 | 5 3 | 3 8 | 2 | |
| AREA= | 67 9 | 206 4 | 1745 0 | 123 0 | 163 5 | 134 2 | 16 2 | |
| VEL= | 3 4 | 5 5 | 8 3 | 5 7 | 6 0 | 5 1 | 2 2 | |
| DEPTH= | 5 3 | 8 2 | 12 8 | 8 5 | 9 2 | 7 5 | 2 6 | |

*SECNO 440 000

3301 HV CHANGED MORE THAN HVINS

3685 20 TRIALS ATTEMPTED WSEL,CWSEL
3693 PROBABLE MINIMUM SPECIFIC ENERGY
3720 CRITICAL DEPTH ASSUMED

3470 ENCROACHMENT STATIONS= 4929 7 5041 4 TYPE= 1 TARGET= 111 700

| | | | | | | | | | |
|---|---|---|---|---|---|---|---|---|---|
| 440 000 | 13 54 | 584 14 | 584 14 | 584 15 | 588 90 | 4 76 | 2 35 | 1 15 | 100000 00 |
| 18200 0 | 0 | 18200 0 | 0 | 0 | 1039 5 | 0 | 312 0 | 44 0 | 100000 00 |
| 19 | 00 | 17 51 | 00 | 000 | 040 | 000 | 000 | 570 60 | 4929 75 |
| 012050 | 650 | 661 | 630 | 20 | 15 | 0 | 00 | 111 63 | 5041 37 |

FLOW DISTRIBUTION FOR SECNO= 440 00 CWSEL= 584 14

| STA= | 4930 | 5046 |
|---|---|---|
| PER Q= | 100 0 | |
| AREA= | 1039 5 | |
| VEL= | 17 5 | |
| DEPTH= | 9 3 | |

*SECNO 442 000

3301 HV CHANGED MORE THAN HVINS

3685 20 TRIALS ATTEMPTED WSEL,CWSEL
3693 PROBABLE MINIMUM SPECIFIC ENERGY
3720 CRITICAL DEPTH ASSUMED

3470 ENCROACHMENT STATIONS= 4919 7 5145 8 TYPE= 1 TARGET= 226 100

| | | | | | | | | | |
|---|---|---|---|---|---|---|---|---|---|
| 442 000 | 19 16 | 601 86 | 601 86 | 601 85 | 605 46 | 3 61 | 6 27 | 12 | 595 60 |
| 18200 0 | 2836 4 | 14367 0 | 996 6 | 292 7 | 868 2 | 199 7 | 331 5 | 46 6 | 596 20 |
| 21 | 9 69 | 16 55 | 4 99 | 045 | 040 | 045 | 000 | 582 70 | 4919 70 |
| 006764 | 730 | 710 | 625 | 20 | 14 | 0 | 00 | 226 10 | 5145 80 |

| | | | | | | | | | |
|---|---|---|---|---|---|---|---|---|---|
| SECNO | DEPTH | CWSEL | CRIWS | WSELK | EG | HV | HL | OLOSS | L-BANK ELEV |
| Q | QLOB | QCH | QROB | ALOB | ACH | AROB | VOL | TWA | R-BANK ELEV |
| TIME | VLOB | VCH | VROB | XNL | XNCH | XNR | WTN | ELMIN | SSTA |
| SLOPE | XLOBL | XLCH | XLOBR | ITRIAL | IDC | ICONT | CORAR | TOPWID | ENDST |

FLOW DISTRIBUTION FOR SECNO= 442 00 CWSEL= 601 86

| STA= | 4920 | 4928 | 4943 | 4957 | 4966 | 5028 | 5043 | 5073 | 5108 | 5142 | 5146 |
|---|---|---|---|---|---|---|---|---|---|---|---|
| PER Q= | 6 | 5 0 | 6 9 | 3 1 | 78 9 | 2 6 | 2 0 | 7 | 2 | 0 | |
| AREA= | 22 0 | 96 5 | 116 3 | 57 9 | 868 2 | 66 0 | 73 7 | 40 0 | 19 3 | 7 | |
| VEL= | 4 7 | 9 5 | 10 7 | 9 9 | 16 5 | 7 3 | 4 9 | 3 0 | 1 8 | 9 | |
| DEPTH= | 2 7 | 6 6 | 7 9 | 7 1 | 14 0 | 4 5 | 2 4 | 1 2 | 6 | 2 | |

*SECNO 444 000

3301 HV CHANGED MORE THAN HVINS

3302 WARNING CONVEYANCE CHANGE OUTSIDE OF ACCEPTABLE RANGE, KRATIO = 1 84

3470 ENCROACHMENT STATIONS= 4916 9 5035 0 TYPE= 1 TARGET= 118 100

| | | | | | | | | | |
|---|---|---|---|---|---|---|---|---|---|
| 444 000 | 21 69 | 605 89 | 00 | 605 89 | 607 65 | 1 76 | 2 00 | 18 | 595 50 |
| 18200 0 | 2810 7 | 15372 7 | 16 6 | 418 4 | 1369 8 | 11 7 | 353 1 | 48 9 | 593 50 |
| 22 | 6 72 | 11 22 | 1 42 | 045 | 040 | 045 | 000 | 584 20 | 4916 90 |
| 002003 | 630 | 592 | 515 | 2 | 0 | 0 | 00 | 118 10 | 5035 00 |

FLOW DISTRIBUTION FOR SECNO= 444 00 CWSEL= 605 89

| STA= | 4917 | 4919 | 4942 | 4960 | 5033 | 5035 |
|---|---|---|---|---|---|---|
| PER Q= | 1 | 8 3 | 7 0 | 84 5 | 1 | |
| AREA= | 12 4 | 222 5 | 183 4 | 1369 8 | 11 7 | |
| VEL= | 1 7 | 6 8 | 6 9 | 11 2 | 1 4 | |
| DEPTH= | 5 0 | 9 9 | 10 2 | 18 7 | 6 2 | |

*SECNO 446 000

3301 HV CHANGED MORE THAN HVINS

3470 ENCROACHMENT STATIONS= 4865 0 5170 0 TYPE= 1 TARGET= 305 000

| | | | | | | | | | |
|---|---|---|---|---|---|---|---|---|---|
| 446 000 | 22 41 | 607 21 | 00 | 607 21 | 608 00 | 79 | 25 | 10 | 594 60 |
| 18200 0 | 5878 5 | 10679 4 | 1642 2 | 1098 7 | 1285 7 | 499 3 | 362 0 | 49 7 | 601 10 |
| 23 | 5 35 | 8 31 | 3 29 | 045 | 040 | 045 | 000 | 584 80 | 4865 00 |
| 001173 | 150 | 171 | 185 | 2 | 0 | 0 | 00 | 305 00 | 5170 00 |

```
   SECNO     DEPTH     CWSEL     CRIWS     WSELK     EG        HV        HL        OLOSS     L-BANK ELEV
   Q         QLOB      QCH       QROB      ALOB      ACH       AROB      VOL       TWA       R-BANK ELEV
   TIME      VLOB      VCH       VROB      XNL       XNCH      XNR       WTN       ELMIN     SSTA
   SLOPE     XLOBL     XLCH      XLOBR     ITRIAL    IDC       ICONT     CORAR     TOPWID    ENDST


FLOW DISTRIBUTION FOR SECNO=    446 00          CWSEL=    607 21

STA=    4865     4878     4930     4951     4965     5035     5048     5084     5122     5135     5170
  PER Q=      2 7     17 1      7 1      5 4     58 7      1 5      3 8      3 2        4        0
   AREA=    135 5    561 3    232 5    169 4   1285 7     75 2    199 5    183 0     32 9      8 7
    VEL=      3 7      5 5      5 5      5 8      8 3      3 7      3 5      3 2      2 0        4
  DEPTH=     10 8     10 8     10 9     11 8     18 4      6 0      5 5      4 8      2 5        2

CCHV=      300 CEHV=      500
*SECNO 448 000

3302 WARNING   CONVEYANCE CHANGE OUTSIDE OF ACCEPTABLE RANGE,  KRATIO =  1 43


3470 ENCROACHMENT STATIONS=     4850 0    5139 3  TYPE=      1  TARGET=      289 300
   448 000     23 24    607 64        00    607 64    608 15        51        06        08    593 20
   18200 0    4121 6   13595 3     483 1    1041 8    2183 1     250 9     368 0     50 3    600 50
        23      3 96      6 23      1 93       045       040       045       000    584 40   4850 00
    000574        68        85       110         2         0         0        00    289 24   5139 24


FLOW DISTRIBUTION FOR SECNO=    448 00          CWSEL=    607 64

STA=    4850     4878     4906     4936     5049     5060     5111     5137     5139
  PER Q=      5 2      7 4     10 1     74 7      1 1      1 5        0        0
   AREA=    301 9    329 9    410 0   2183 1     70 0    164 7     15 5        7
    VEL=      3 1      4 1      4 5      6 2      2 8      1 7        6        4
  DEPTH=     10 9     11 7     13 4     19 4      6 5      3 2        6        4

*SECNO 449 000

3470 ENCROACHMENT STATIONS=     4860 0    5153 2  TYPE=      1  TARGET=      293 200
        PRIVATE ROAD - DIP SECTION WITH STEEL GRATING BRIDGE
                MODELED AS SECTION OVER T O R  USING ORIGINAL T O R  POINTS
                EXCEPT AT GRATING WHERE GRATING IS IGNORED AND CHANNEL
                BOTTOM IS SHOWN IN 6-FOOT WIDE SECTION
   449 000     21 66    607 66        00    607 66    608 18        52        02        01    595 50
   18200 0    3014 3   12148 9    3036 9     759 2    1859 7     781 7     370 6     50 5    591 10
        23      3 97      6 53      3 89       045       040       045       000    586 00   4860 00
    000709        20        37        38         1         0         0        00    292 81   5152 81
```

| | | | | | | | | | |
|---|---|---|---|---|---|---|---|---|---|
| SECNO | DEPTH | CWSEL | CRIWS | WSELK | EG | HV | HL | OLOSS | L-BANK ELEV |
| Q | QLOB | QCH | QROB | ALOB | ACH | AROB | VOL | TWA | R-BANK ELEV |
| TIME | VLOB | VCH | VROB | XNL | XNCH | XNR | WTN | ELMIN | SSTA |
| SLOPE | XLOBL | XLCH | XLOBR | ITRIAL | IDC | ICONT | CORAR | TOPWID | ENDST |

FLOW DISTRIBUTION FOR SECNO= 449 00 CWSEL= 607 66

| STA= | 4860 | 4887 | 4909 | 4931 | 5036 | 5057 | 5071 | 5142 | 5153 |
|---|---|---|---|---|---|---|---|---|---|
| PER Q= | 5 3 | 5 3 | 6 0 | 66 8 | 9 2 | 3 3 | 4 1 | 0 | |
| AREA= | 283 6 | 230 2 | 245 4 | 1859 7 | 318 5 | 144 7 | 318 2 | 3 | |
| VEL= | 3 4 | 4 2 | 4 4 | 6 5 | 5 3 | 4 2 | 2 4 | 1 | |
| DEPTH= | 10 4 | 10 5 | 11 4 | 17 7 | 14 8 | 11 0 | 4 5 | 0 | |

*SECNO 450 000

3470 ENCROACHMENT STATIONS= 4860 0 5175 0 TYPE= 1 TARGET= 315 000

| | | | | | | | | | |
|---|---|---|---|---|---|---|---|---|---|
| 450 000 | 21 73 | 607 83 | 00 | 607 83 | 608 24 | 41 | 03 | 03 | 595 50 |
| 18200 0 | 2646 6 | 11431 0 | 4122 4 | 771 1 | 1945 4 | 1148 5 | 374 4 | 50 8 | 590 80 |
| 24 | 3 43 | 5 88 | 3 59 | 045 | 040 | 045 | 000 | 586 10 | 4860 00 |
| 000520 | 43 | 49 | 42 | 2 | 0 | 0 | 00 | 315 00 | 5175 00 |

FLOW DISTRIBUTION FOR SECNO= 450 00 CWSEL= 607 83

| STA= | 4860 | 4887 | 4909 | 4931 | 5036 | 5057 | 5071 | 5142 | 5160 | 5175 |
|---|---|---|---|---|---|---|---|---|---|---|
| PER Q= | 4 6 | 4 7 | 5 3 | 62 8 | 9 4 | 3 6 | 9 1 | 5 | 0 | |
| AREA= | 288 2 | 233 9 | 249 1 | 1945 4 | 352 2 | 168 7 | 558 3 | 59 8 | 9 4 | |
| VEL= | 2 9 | 3 6 | 3 8 | 5 9 | 4 9 | 3 9 | 3 0 | 1 7 | 5 | |
| DEPTH= | 10 6 | 10 6 | 11 5 | 18 5 | 16 4 | 12 8 | 7 8 | 3 4 | 6 | |

CCHV= 100 CEHV= 300

*SECNO 452 000

3470 ENCROACHMENT STATIONS= 4872 0 5195 0 TYPE= 1 TARGET= 323 000

| | | | | | | | | | |
|---|---|---|---|---|---|---|---|---|---|
| 452 000 | 21 62 | 607 92 | 00 | 607 94 | 608 29 | 37 | 04 | 00 | 593 70 |
| 18200 0 | 3297 8 | 11347 5 | 3554 7 | 910 6 | 2036 3 | 1127 5 | 382 7 | 51 5 | 594 30 |
| 24 | 3 62 | 5 57 | 3 15 | 045 | 040 | 045 | 000 | 586 30 | 4872 00 |
| 000482 | 72 | 86 | 115 | 2 | 0 | 0 | 00 | 323 00 | 5195 00 |

FLOW DISTRIBUTION FOR SECNO= 452 00 CWSEL= 607 92

| STA= | 4872 | 4874 | 4896 | 4919 | 4929 | 4952 | 5064 | 5084 | 5116 | 5141 | 5175 | 5195 |
|---|---|---|---|---|---|---|---|---|---|---|---|---|
| PER Q= | 2 | 4 6 | 4 5 | 2 2 | 6 7 | 62 3 | 5 3 | 6 6 | 3 4 | 3 1 | 1 1 | |
| AREA= | 24 8 | 235 9 | 236 6 | 111 7 | 301 6 | 2036 3 | 245 2 | 342 5 | 210 1 | 221 0 | 108 7 | |
| VEL= | 1 1 | 3 5 | 3 5 | 3 6 | 4 0 | 5 6 | 3 9 | 3 5 | 3 0 | 2 5 | 1 9 | |
| DEPTH= | 10 8 | 10 8 | 10 5 | 11 2 | 13 2 | 18 1 | 12 8 | 10 6 | 8 4 | 6 5 | 5 4 | |

| | | | | | | | | | |
|---|---|---|---|---|---|---|---|---|---|
| SECNO | DEPTH | CWSEL | CRIWS | WSELK | EG | HV | HL | OLOSS | L-BANK ELEV |
| Q | QLOB | QCH | QROB | ALOB | ACH | AROB | VOL | TWA | R-BANK ELEV |
| TIME | VLOB | VCH | VROB | XNL | XNCH | XNR | WTN | ELMIN | SSTA |
| SLOPE | XLOBL | XLCH | XLOBR | ITRIAL | IDC | ICONT | CORAR | TOPWID | ENDST |

*SECNO 454 000

3470 ENCROACHMENT STATIONS= 4924 2 5200 0 TYPE= 1 TARGET= 275 800

| | | | | | | | | | |
|---|---|---|---|---|---|---|---|---|---|
| 454 000 | 21 50 | 608 00 | 00 | 608 00 | 608 43 | 44 | 12 | 02 | 596 60 |
| 18200 0 | 1041 7 | 15555 1 | 1603 2 | 339 8 | 2775 3 | 555 6 | 405 1 | 53 3 | 595 80 |
| 26 | 3 07 | 5 60 | 2 89 | 045 | 040 | 045 | 000 | 586 50 | 4924 20 |
| 000501 | 230 | 254 | 260 | 2 | 0 | 0 | 00 | 275 80 | 5200 00 |

FLOW DISTRIBUTION FOR SECNO= 454 00 CWSEL= 608 00

| STA= | 4924 | 4938 | 4953 | 4965 | 4971 | 5126 | 5148 | 5200 |
|---|---|---|---|---|---|---|---|---|
| PER Q= | 2 | 1 7 | 2 4 | 1 3 | 85 5 | 4 6 | 4 2 | |
| AREA= | 33 7 | 113 8 | 125 4 | 66 9 | 2775 3 | 233 2 | 322 4 | |
| VEL= | 1 3 | 2 8 | 3 5 | 3 6 | 5 6 | 3 6 | 2 4 | |
| DEPTH= | 2 4 | 7 8 | 10 4 | 10 8 | 17 9 | 10 7 | 6 2 | |

*SECNO 456 000

3470 ENCROACHMENT STATIONS= 4915 0 5195 9 TYPE= 1 TARGET= 280 900

| | | | | | | | | | |
|---|---|---|---|---|---|---|---|---|---|
| 456 000 | 20 86 | 608 16 | 00 | 608 17 | 608 71 | 55 | 24 | 04 | 597 80 |
| 18200 0 | 815 3 | 13512 8 | 3871 9 | 263 1 | 2060 8 | 979 3 | 436 8 | 55 7 | 594 60 |
| 27 | 3 10 | 6 56 | 3 95 | 045 | 040 | 045 | 000 | 587 30 | 4915 00 |
| 000733 | 450 | 420 | 300 | 2 | 0 | 0 | 00 | 280 85 | 5195 85 |

FLOW DISTRIBUTION FOR SECNO= 456 00 CWSEL= 608 16

| STA= | 4915 | 4937 | 4952 | 5074 | 5101 | 5158 | 5185 | 5196 |
|---|---|---|---|---|---|---|---|---|
| PER Q= | 2 0 | 2 5 | 74 2 | 8 7 | 10 9 | 1 6 | 1 | |
| AREA= | 137 2 | 125 9 | 2060 8 | 332 5 | 516 8 | 118 5 | 11 5 | |
| VEL= | 2 6 | 3 7 | 6 6 | 4 8 | 3 8 | 2 4 | 9 | |
| DEPTH= | 6 2 | 8 5 | 16 9 | 12 4 | 9 0 | 4 4 | 1 1 | |

*SECNO 458 000

3470 ENCROACHMENT STATIONS= 4835 0 5100 0 TYPE= 1 TARGET= 265 000

| | | | | | | | | | |
|---|---|---|---|---|---|---|---|---|---|
| 458 000 | 19 98 | 608 38 | 00 | 608 38 | 609 04 | 67 | 30 | 03 | 596 80 |
| 18200 0 | 3022 9 | 13715 7 | 1461 4 | 741 3 | 1905 7 | 385 4 | 463 0 | 57 9 | 598 90 |
| 29 | 4 08 | 7 20 | 3 79 | 045 | 040 | 045 | 000 | 588 40 | 4835 00 |
| 000938 | 371 | 366 | 340 | 0 | 0 | 0 | 00 | 265 00 | 5100 00 |

| | | | | | | | | | |
|---|---|---|---|---|---|---|---|---|---|
| SECNO | DEPTH | CWSEL | CRIWS | WSELK | EG | HV | HL | OLOSS | L-BANK ELEV |
| Q | QLOB | QCH | QROB | ALOB | ACH | AROB | VOL | TWA | R-BANK ELEV |
| TIME | VLOB | VCH | VROB | XNL | XNCH | XNR | WTN | ELMIN | SSTA |
| SLOPE | XLOBL | XLCH | XLOBR | ITRIAL | IDC | ICONT | CORAR | TOPWID | ENDST |

FLOW DISTRIBUTION FOR SECNO= 458 00 CWSEL= 608 38

| STA= | 4835 | 4871 | 4894 | 4925 | 5042 | 5059 | 5092 | 5100 |
|---|---|---|---|---|---|---|---|---|
| PER Q= | 4 4 | 4 1 | 8 2 | 75 4 | 3 9 | 3 9 | 1 | |
| AREA= | 245 4 | 180 4 | 315 4 | 1905 7 | 158 2 | 209 5 | 17 8 | |
| VEL= | 3 3 | 4 1 | 4 7 | 7 2 | 4 5 | 3 4 | 1 5 | |
| DEPTH= | 6 7 | 8 1 | 10 1 | 16 3 | 9 5 | 6 3 | 2 2 | |

*SECNO 460 000

3301 HV CHANGED MORE THAN HVINS

3470 ENCROACHMENT STATIONS= 4934 5 5085 5 TYPE= 1 TARGET= 151 000

| | | | | | | | | | |
|---|---|---|---|---|---|---|---|---|---|
| 460 000 | 18 81 | 608 51 | 00 | 608 50 | 609 74 | 1 23 | 53 | 17 | 100000 00 |
| 18200 0 | 0 | 18200 0 | 0 | 0 | 2045 6 | 0 | 486 8 | 59 9 | 100000 00 |
| 30 | 00 | 8 90 | 00 | 000 | 040 | 000 | 000 | 589 70 | 4934 52 |
| 001906 | 430 | 403 | 410 | 2 | 0 | 0 | 00 | 150 98 | 5085 50 |

FLOW DISTRIBUTION FOR SECNO= 460 00 CWSEL= 608 51

| STA= | 4935 | 5095 |
|---|---|---|
| PER Q= | 100 0 | |
| AREA= | 2045 6 | |
| VEL= | 8 9 | |
| DEPTH= | 13 5 | |

*SECNO 462 000

3301 HV CHANGED MORE THAN HVINS

3470 ENCROACHMENT STATIONS= 4918 1 5123 6 TYPE= 1 TARGET= 205 500

| | | | | | | | | | |
|---|---|---|---|---|---|---|---|---|---|
| 462 000 | 17 37 | 609 47 | 00 | 609 46 | 610 19 | 72 | 40 | 05 | 607 40 |
| 18200 0 | 5 3 | 18194 7 | 0 | 4 9 | 2668 0 | 0 | 501 8 | 61 0 | 100000 00 |
| 31 | 1 07 | 6 82 | 00 | 045 | 040 | 000 | 000 | 592 10 | 4918 10 |
| 001129 | 200 | 277 | 370 | 2 | 0 | 0 | 00 | 205 50 | 5123 60 |

```
   SECNO     DEPTH     CWSEL     CRIWS     WSELK     EG        HV        HL        OLOSS     L-BANK ELEV
   Q         QLOB      QCH       QROB      ALOB      ACH       AROB      VOL       TWA       R-BANK ELEV
   TIME      VLOB      VCH       VROB      XNL       XNCH      XNR       WTN       ELMIN     SSTA
   SLOPE     XLOBL     XLCH      XLOBR     ITRIAL    IDC       ICONT     CORAR     TOPWID    ENDST


FLOW DISTRIBUTION FOR SECNO=    462 00          CWSEL=    609 47

STA=    4918      4923      5124
  PER Q=         0     100 0
   AREA=       4 9    2668 0
    VEL=       1 1       6 8
  DEPTH=       1 0      13 3

CCHV=      100 CEHV=      300
*SECNO 464 000

3470 ENCROACHMENT STATIONS=     4930 0    5160 0  TYPE=      1  TARGET=      230 000
   464 000      15 34     609 94         00     609 93     610 96       1 02        68         09     606 90
   18100 0       54 5    17913 0      132 6       27 1     2196 3       39 8      528 6       63 4     605 50
        33       2 01       8 16       3 33        050        038        040        000     594 60    4930 00
    001914       395        473        615          2          0          0         00     230 00    5160 00


FLOW DISTRIBUTION FOR SECNO=    464 00          CWSEL=    609 94

STA=    4930      4943      5150      5160
  PER Q=         3      99 0         7
   AREA=      27 1    2196 3      39 8
    VEL=       2 0       8 2       3 3
  DEPTH=       2 1      10 6       3 9

*SECNO 466 000

3302 WARNING   CONVEYANCE CHANGE OUTSIDE OF ACCEPTABLE RANGE,  KRATIO =    66


3470 ENCROACHMENT STATIONS=     4919 3    5220 0  TYPE=      1  TARGET=      300 700
        BASE CASE FOR FLOODWAY FOLLOWS THE NO LEVEE CONDITION FROM SECTIONS
                466 TO U/S LIMIT OF STUDY
   466 000      12 06     610 76         00     610 73     612 05       1 30       1 01         08     610 80
   18100 0          0    18100 0          0          0     1981 2          0      546 4       65 6 100000 00
        34         00       9 14         00        000        038        000        000     598 70    4919 40
    004343       340        365        370          2          0          0         00     293 19    5212 59
```

```
 SECNO     DEPTH     CWSEL     CRIWS     WSELK     EG        HV        HL        OLOSS     L-BANK ELEV
 Q         QLOB      QCH       QROB      ALOB      ACH       AROB      VOL       TWA       R-BANK ELEV
 TIME      VLOB      VCH       VROB      XNL       XNCH      XNR       WTN       ELMIN     SSTA
 SLOPE     XLOBL     XLCH      XLOBR     ITRIAL    IDC       ICONT     CORAR     TOPWID    ENDST


FLOW DISTRIBUTION FOR SECNO=    466 00          CWSEL=    610 76

STA=    4919     5230
  PER Q=    100 0
   AREA=   1981 2
    VEL=      9 1
  DEPTH=      6 8

*SECNO 468 000

3301 HV CHANGED MORE THAN HVINS


3302 WARNING   CONVEYANCE CHANGE OUTSIDE OF ACCEPTABLE RANGE,  KRATIO =  1 43


3470 ENCROACHMENT STATIONS=     4910 0    5290 0  TYPE=      1  TARGET=      380 000
   468 000     12 84    612 64        00    612 62    613 36        72      1 25        06    610 40
   18100 0    107 6   17992 4         0      48 8    2638 9         0     569 2      68 8 100000 00
        36     2 20      6 82        00       050       038       000       000    599 80   4910 00
    002112      475       425       365         2         0         0        00    370 96   5280 96


FLOW DISTRIBUTION FOR SECNO=    468 00          CWSEL=    612 64

STA=    4910     4932     5306
  PER Q=        6     99 4
   AREA=     48 8   2638 9
    VEL=      2 2      6 8
  DEPTH=      2 3      7 6

*SECNO 468 200

3470 ENCROACHMENT STATIONS=     4840 0    5190 0  TYPE=      1  TARGET=      350 000
   468 200     13 35    613 25        00    613 22    614 01        76        64        01 100000 00
   18100 0         0   18100 0         0         0    2591 3         0     587 7      71 3    616 40
        37        00      6 98        00       000       038       000       000    599 90   4846 83
    002089       330       305       220         2         0         0        00    331 17   5178 00
```

```
SECNO     DEPTH     CWSEL     CRIWS     WSELK     EG        HV        HL        OLOSS     L-BANK ELEV
Q         QLOB      QCH       QROB      ALOB      ACH       AROB      VOL       TWA       R-BANK ELEV
TIME      VLOB      VCH       VROB      XNL       XNCH      XNR       WTN       ELMIN     SSTA
SLOPE     XLOBL     XLCH      XLOBR     ITRIAL    IDC       ICONT     CORAR     TOPWID    ENDST


FLOW DISTRIBUTION FOR SECNO=    468 20          CWSEL=    613 25

STA=    4847     5189
  PER Q=    100 0
   AREA=   2591 3
    VEL=      7 0
  DEPTH=      7 8

*SECNO 470 000

3470 ENCROACHMENT STATIONS=     4950 9    5381 7  TYPE=      1  TARGET=      430 800
        CHANNEL ENTERS CITY OF ESCONDIDO
   470 000     13 80    613 60        00    613 53    614 70      1 10        59        10 100000 00
   18100 0         0   18100 0         0         0    2152 8         0     599 1      72 9    617 20
        38        00      8 41        00       000       038       000       000    599 80   4968 99
    003904       190       210       140         2         0         0        00    331 04   5300 03


FLOW DISTRIBUTION FOR SECNO=    470 00          CWSEL=    613 60

STA=    4969     5323
  PER Q=    100 0
   AREA=   2152 8
    VEL=      8 4
  DEPTH=      6 5

*SECNO 470 200

3265 DIVIDED FLOW


3470 ENCROACHMENT STATIONS=     4930 0    5408 0  TYPE=      1  TARGET=      478 000
        THIS SECTION WAS ADDED TO MATCH THE CONTROL SECTION IN THE PREVIOUS
                FIS DONE BY DWR (SECTION 80605)
   470 200     14 38    614 28        00    614 48    615 44      1 16        72        02 100000 00
   18100 0         0   11777 1    6322 9         0    1421 1     682 4     607 9      74 3    617 70
        38        00      8 29      9 27       000       038       040       000    599 90   4938 93
    004161       210       185       150         2         0         0        00    324 67   5408 00
```

| | | | | | | | | | |
|---|---|---|---|---|---|---|---|---|---|
| SECNO | DEPTH | CWSEL | CRIWS | WSELK | EG | HV | HL | OLOSS | L-BANK ELEV |
| Q | QLOB | QCH | QROB | ALOB | ACH | AROB | VOL | TWA | R-BANK ELEV |
| TIME | VLOB | VCH | VROB | XNL | XNCH | XNR | WTN | ELMIN | SSTA |
| SLOPE | XLOBL | XLCH | XLOBR | ITRIAL | IDC | ICONT | CORAR | TOPWID | ENDST |

FLOW DISTRIBUTION FOR SECNO= 470 20 CWSEL= 614 28

| STA= | 4939 | 5297 | 5333 | 5354 | 5383 | 5408 |
|---|---|---|---|---|---|---|
| PER Q= | 65 1 | 1 3 | 9 0 | 16 2 | 8 4 | |
| AREA= | 1421 1 | 46 8 | 169 3 | 274 8 | 191 5 | |
| VEL= | 8 3 | 5 0 | 9 7 | 10 7 | 8 0 | |
| DEPTH= | 6 0 | 1 3 | 8 2 | 9 4 | 7 6 | |

*SECNO 472 000

3265 DIVIDED FLOW

3470 ENCROACHMENT STATIONS= 4885 7 5401 7 TYPE= 1 TARGET= 516 000

| | | | | | | | | | |
|---|---|---|---|---|---|---|---|---|---|
| 472 000 | 14 69 | 615 29 | 00 | 615 20 | 616 00 | 72 | 52 | 04 | 618 30 |
| 18100 0 | 0 | 12444 7 | 5655 3 | 0 | 1887 4 | 781 2 | 616 9 | 75 7 | 617 30 |
| 39 | 00 | 6 59 | 7 24 | 000 | 038 | 040 | 000 | 600 60 | 4892 17 |
| 002539 | 200 | 185 | 120 | 2 | 0 | 0 | 00 | 417 82 | 5401 70 |

FLOW DISTRIBUTION FOR SECNO= 472 00 CWSEL= 615 29

| STA= | 4892 | 5268 | 5296 | 5332 | 5359 | 5385 | 5402 |
|---|---|---|---|---|---|---|---|
| PER Q= | 68 8 | 0 | 3 5 | 9 7 | 13 0 | 5 0 | |
| AREA= | 1887 4 | 3 0 | 140 1 | 227 5 | 265 4 | 145 1 | |
| VEL= | 6 6 | 1 0 | 4 5 | 7 8 | 8 9 | 6 2 | |
| DEPTH= | 6 2 | 1 | 3 8 | 8 5 | 10 3 | 8 5 | |

*SECNO 474 000

3265 DIVIDED FLOW

3302 WARNING CONVEYANCE CHANGE OUTSIDE OF ACCEPTABLE RANGE, KRATIO = 1 40

3470 ENCROACHMENT STATIONS= 4800 0 5355 3 TYPE= 1 TARGET= 555 300

| | | | | | | | | | |
|---|---|---|---|---|---|---|---|---|---|
| 474 000 | 15 28 | 616 38 | 00 | 616 17 | 616 81 | 43 | 78 | 03 | 619 60 |
| 18000 0 | 0 | 13355 8 | 4644 2 | 0 | 2443 9 | 996 2 | 648 1 | 80 2 | 619 80 |
| 41 | 00 | 5 46 | 4 66 | 000 | 038 | 040 | 000 | 601 10 | 4808 38 |
| 001279 | 448 | 443 | 448 | 2 | 0 | 0 | 00 | 475 17 | 5355 30 |

| | | | | | | | | | |
|---|---|---|---|---|---|---|---|---|---|
| SECNO | DEPTH | CWSEL | CRIWS | WSELK | EG | HV | HL | OLOSS | L-BANK ELEV |
| Q | QLOB | QCH | QROB | ALOB | ACH | AROB | VOL | TWA | R-BANK ELEV |
| TIME | VLOB | VCH | VROB | XNL | XNCH | XNR | WTN | ELMIN | SSTA |
| SLOPE | XLOBL | XLCH | XLOBR | ITRIAL | IDC | ICONT | CORAR | TOPWID | ENDST |

FLOW DISTRIBUTION FOR SECNO= 474 00 CWSEL= 616 38

| STA= | 4808 | 5180 | 5197 | 5220 | 5263 | 5306 | 5329 | 5355 |
|---|---|---|---|---|---|---|---|---|
| PER Q= | 74 2 | 1 | 1 0 | 5 6 | 10 8 | 5 6 | 2 8 | |
| AREA= | 2443 9 | 7 9 | 66 0 | 241 8 | 357 3 | 186 6 | 136 6 | |
| VEL= | 5 5 | 1 4 | 2 7 | 4 2 | 5 4 | 5 4 | 3 7 | |
| DEPTH= | 7 9 | 5 | 2 9 | 5 6 | 8 2 | 8 2 | 5 2 | |

*SECNO 476 000

3265 DIVIDED FLOW

3470 ENCROACHMENT STATIONS= 4830 0 5206 8 TYPE= 1 TARGET= 376 800
U/S LIMIT OF STUDY

| | | | | | | | | | |
|---|---|---|---|---|---|---|---|---|---|
| 476 000 | 15 65 | 616 85 | 00 | 616 63 | 617 74 | 89 | 79 | 14 | 100000 00 |
| 18000 0 | 0 | 15901 9 | 2098 1 | 0 | 2025 4 | 403 1 | 679 5 | 84 5 | 621 30 |
| 43 | 00 | 7 85 | 5 21 | 000 | 038 | 040 | 000 | 601 20 | 4853 29 |
| 002375 | 472 | 467 | 465 | 2 | 0 | 0 | 00 | 323 57 | 5206 80 |

FLOW DISTRIBUTION FOR SECNO= 476 00 CWSEL= 616 85

| STA= | 4853 | 5103 | 5129 | 5134 | 5169 | 5207 |
|---|---|---|---|---|---|---|
| PER Q= | 88 3 | 2 | 8 | 6 9 | 3 9 | |
| AREA= | 2025 4 | 12 0 | 28 1 | 207 1 | 155 9 | |
| VEL= | 7 9 | 2 4 | 4 9 | 6 0 | 4 4 | |
| DEPTH= | 8 5 | 5 | 4 9 | 6 0 | 4 1 | |

THIS RUN EXECUTED 16DEC05 17 30 46

**********
HEC-2 WATER SURFACE PROFILES

Version 4 6 2, May 1991
**********

NOTE- ASTERISK (*) AT LEFT OF CROSS-SECTION NUMBER INDICATES MESSAGE IN SUMMARY OF ERRORS LIST

ESCONDIDO CK UPPER REACH

SUMMARY PRINTOUT

| | SECNO | CWSEL | Q | ELMIN | STCHL | STCHR | STENCL | STENCR | SSTA | ENDST |
|---|---|---|---|---|---|---|---|---|---|---|
| * | 400 000 | 538 33 | 18700 00 | 526 70 | 4955 60 | 5025 20 | 00 | 00 | 4902 94 | 5108 45 |
| | 400 000 | 539 31 | 18700 00 | 526 70 | 4955 60 | 5025 20 | 4907 00 | 5108 40 | 4907 00 | 5108 40 |
| * | 402 000 | 542 11 | 18700 00 | 529 80 | 4954 50 | 5052 10 | 00 | 00 | 4931 03 | 5125 87 |
| * | 402 000 | 542 14 | 18700 00 | 529 80 | 4954 50 | 5052 10 | 4931 00 | 5120 00 | 4931 00 | 5120 00 |
| | 404 000 | 546 37 | 18700 00 | 533 00 | 4897 20 | 5046 20 | 00 | 00 | 4886 96 | 5092 15 |
| | 404 000 | 546 36 | 18700 00 | 533 00 | 4897 20 | 5046 20 | 4887 00 | 5090 00 | 4887 01 | 5090 00 |
| * | 406 000 | 549 67 | 18700 00 | 537 20 | 5079 50 | 5181 50 | 00 | 00 | 4816 29 | 5204 46 |
| * | 406 000 | 549 70 | 18700 00 | 537 20 | 5079 50 | 5181 50 | 4914 70 | 5181 50 | 4914 70 | 5181 50 |
| * | 408 000 | 550 27 | 18700 00 | 538 80 | 4939 80 | 5080 70 | 00 | 00 | 4711 75 | 5084 39 |
| | 408 000 | 550 50 | 18700 00 | 538 80 | 4939 80 | 5080 70 | 4801 20 | 5080 70 | 4801 20 | 5080 70 |
| * | 410 000 | 553 03 | 18700 00 | 538 40 | 4969 80 | 5062 10 | 4789 90 | 5300 00 | 4789 90 | 5102 59 |
| * | 410 000 | 552 88 | 18700 00 | 538 40 | 4969 80 | 5062 10 | 4789 90 | 5062 10 | 4789 90 | 5062 10 |
| * | 412 000 | 557 18 | 18700 00 | 540 50 | 4938 30 | 5144 80 | 00 | 00 | 4811 60 | 5188 85 |
| * | 412 000 | 557 33 | 18700 00 | 540 50 | 4938 30 | 5144 80 | 4830 00 | 5150 00 | 4830 00 | 5150 00 |
| * | 414 000 | 557 75 | 18700 00 | 543 30 | 4967 00 | 5055 70 | 00 | 00 | 4897 08 | 5183 00 |
| * | 414 000 | 557 92 | 18700 00 | 543 30 | 4967 00 | 5055 70 | 4897 10 | 5165 00 | 4897 10 | 5165 00 |
| * | 416 000 | 562 73 | 18700 00 | 550 00 | 4960 40 | 5027 10 | 00 | 00 | 4800 18 | 5272 36 |
| * | 416 000 | 562 58 | 18700 00 | 550 00 | 4960 40 | 5027 10 | 4800 20 | 5245 00 | 4800 76 | 5245 00 |
| * | 418 000 | 565 40 | 18700 00 | 551 50 | 4973 00 | 5028 70 | 4714 00 | 5272 10 | 4714 00 | 5229 29 |
| * | 418 000 | 565 40 | 18700 00 | 551 50 | 4973 00 | 5028 70 | 4714 00 | 5055 00 | 4714 00 | 5055 00 |
| * | 420 000 | 566 37 | 18700 00 | 552 70 | 4971 90 | 5014 80 | 4300 00 | 5335 40 | 4899 68 | 5271 59 |
| * | 420 000 | 566 18 | 18700 00 | 552 70 | 4971 90 | 5014 80 | 4899 50 | 5237 30 | 4904 20 | 5237 30 |

| | SECNO | CWSEL | Q | ELMIN | STCHL | STCHR | STENCL | STENCR | SSTA | ENDST |
|---|---|---|---|---|---|---|---|---|---|---|
| | 422 000 | 568 09 | 18200 00 | 552 50 | 4973 30 | 5022 10 | 4500 00 | 5231 00 | 4821 34 | 5231 00 |
| | 422 000 | 568 19 | 18200 00 | 552 50 | 4973 30 | 5022 10 | 4821 50 | 5231 00 | 4821 50 | 5231 00 |
| | 428 000 | 568 71 | 18200 00 | 552 80 | 4976 50 | 5071 50 | 4600 00 | 5208 00 | 4814 54 | 5208 00 |
| | 428 000 | 568 76 | 18200 00 | 552 80 | 4976 50 | 5071 50 | 4814 60 | 5208 00 | 4814 60 | 5208 00 |
| * | 429 000 | 568 47 | 17940 00 | 560 90 | 4962 20 | 5058 20 | 4750 00 | 5204 00 | 4827 91 | 5204 00 |
| * | 429 000 | 568 53 | 17940 00 | 560 90 | 4962 20 | 5058 20 | 4828 00 | 5204 00 | 4828 00 | 5204 00 |
| | 430 000 | 569 24 | 18200 00 | 557 10 | 4971 00 | 5028 50 | 4819 00 | 5182 00 | 4819 00 | 5182 00 |
| | 430 000 | 569 24 | 18200 00 | 557 10 | 4971 00 | 5028 50 | 4819 00 | 5182 00 | 4819 00 | 5182 00 |
| * | 432 000 | 570 14 | 18200 00 | 558 20 | 4964 60 | 5040 40 | 4816 50 | 5144 00 | 4816 50 | 5144 00 |
| * | 432 000 | 570 14 | 18200 00 | 558 20 | 4964 60 | 5040 40 | 4816 50 | 5144 00 | 4816 50 | 5144 00 |
| * | 434 000 | 572 76 | 18200 00 | 557 80 | 4978 00 | 5036 50 | 4845 00 | 5200 00 | 4845 00 | 5106 23 |
| * | 434 000 | 572 76 | 18200 00 | 557 80 | 4978 00 | 5036 50 | 4845 00 | 5106 20 | 4845 00 | 5106 20 |
| * | 436 000 | 576 36 | 18200 00 | 563 40 | 4963 30 | 5031 70 | 00 | 00 | 4941 23 | 5074 24 |
| * | 436 000 | 576 31 | 18200 00 | 563 40 | 4963 30 | 5031 70 | 4944 90 | 5074 20 | 4944 90 | 5074 17 |
| * | 438 000 | 581 45 | 18200 00 | 564 40 | 4937 90 | 5074 20 | 00 | 00 | 4881 14 | 5130 31 |
| * | 438 000 | 581 49 | 18200 00 | 564 40 | 4937 90 | 5074 20 | 4900 00 | 5130 30 | 4900 00 | 5130 30 |
| * | 440 000 | 584 15 | 18200 00 | 570 60 | 4926 00 | 5045 90 | 00 | 00 | 4929 71 | 5041 39 |
| * | 440 000 | 584 14 | 18200 00 | 570 60 | 4926 00 | 5045 90 | 4929 70 | 5041 40 | 4929 75 | 5041 37 |
| * | 442 000 | 601 85 | 18200 00 | 582 70 | 4965 50 | 5027 70 | 00 | 00 | 4919 70 | 5145 80 |
| * | 442 000 | 601 86 | 18200 00 | 582 70 | 4965 50 | 5027 70 | 4919 70 | 5145 80 | 4919 70 | 5145 80 |
| * | 444 000 | 605 89 | 18200 00 | 584 20 | 4959 90 | 5033 10 | 4915 00 | 5055 80 | 4916 87 | 5035 00 |
| * | 444 000 | 605 89 | 18200 00 | 584 20 | 4959 90 | 5033 10 | 4916 90 | 5035 00 | 4916 90 | 5035 00 |
| | 446 000 | 607 21 | 18200 00 | 584 80 | 4965 30 | 5035 20 | 4865 00 | 5240 00 | 4865 00 | 5179 06 |
| | 446 000 | 607 21 | 18200 00 | 584 80 | 4965 30 | 5035 20 | 4865 00 | 5170 00 | 4865 00 | 5170 00 |
| * | 448 000 | 607 64 | 18200 00 | 584 40 | 4936 20 | 5048 80 | 4850 00 | 5200 00 | 4850 00 | 5139 25 |
| * | 448 000 | 607 64 | 18200 00 | 584 40 | 4936 20 | 5048 80 | 4850 00 | 5139 30 | 4850 00 | 5139 24 |
| | 449 000 | 607 66 | 18200 00 | 586 00 | 4930 80 | 5035 80 | 4860 00 | 5200 00 | 4860 00 | 5153 21 |
| | 449 000 | 607 66 | 18200 00 | 586 00 | 4930 80 | 5035 80 | 4860 00 | 5153 20 | 4860 00 | 5152 81 |
| | 450 000 | 607 83 | 18200 00 | 586 10 | 4930 80 | 5035 80 | 4860 00 | 5250 00 | 4860 00 | 5181 73 |
| | 450 000 | 607 83 | 18200 00 | 586 10 | 4930 80 | 5035 80 | 4860 00 | 5175 00 | 4860 00 | 5175 00 |
| | 452 000 | 607 94 | 18200 00 | 586 30 | 4951 70 | 5064 40 | 4872 00 | 5300 00 | 4872 00 | 5221 21 |
| | 452 000 | 607 92 | 18200 00 | 586 30 | 4951 70 | 5064 40 | 4872 00 | 5195 00 | 4872 00 | 5195 00 |
| | 454 000 | 608 00 | 18200 00 | 586 50 | 4971 20 | 5126 00 | 00 | 00 | 4924 15 | 5219 52 |
| | 454 000 | 608 00 | 18200 00 | 586 50 | 4971 20 | 5126 00 | 4924 20 | 5200 00 | 4924 20 | 5200 00 |

| | SECNO | CWSEL | Q | ELMIN | STCHL | STCHR | STENCL | STENCR | SSTA | ENDST |
|---|---|---|---|---|---|---|---|---|---|---|
| | 456 000 | 608 17 | 18200 00 | 587 30 | 4951 80 | 5073 80 | 4870 50 | 5300 00 | 4903 04 | 5195 92 |
| | 456 000 | 608 16 | 18200 00 | 587 30 | 4951 80 | 5073 80 | 4915 00 | 5195 90 | 4915 00 | 5195 85 |
| | 458 000 | 608 38 | 18200 00 | 588 40 | 4924 90 | 5042 10 | 4833 00 | 5200 00 | 4833 00 | 5105 72 |
| | 458 000 | 608 38 | 18200 00 | 588 40 | 4924 90 | 5042 10 | 4835 00 | 5100 00 | 4835 00 | 5100 00 |
| * | 460 000 | 608 50 | 18200 00 | 589 70 | 4929 90 | 5094 70 | 00 | 00 | 4934 53 | 5085 54 |
| | 460 000 | 608 51 | 18200 00 | 589 70 | 4929 90 | 5094 70 | 4934 50 | 5085 50 | 4934 52 | 5085 50 |
| | 462 000 | 609 46 | 18200 00 | 592 10 | 4922 80 | 5123 60 | 4844 00 | 5200 00 | 4918 06 | 5145 60 |
| | 462 000 | 609 47 | 18200 00 | 592 10 | 4922 80 | 5123 60 | 4918 10 | 5123 60 | 4918 10 | 5123 60 |
| | 464 000 | 609 93 | 18100 00 | 594 60 | 4942 80 | 5149 90 | 00 | 00 | 4921 70 | 5188 02 |
| | 464 000 | 609 94 | 18100 00 | 594 60 | 4942 80 | 5149 90 | 4930 00 | 5160 00 | 4930 00 | 5160 00 |
| * | 466 000 | 610 73 | 18100 00 | 598 70 | 4919 30 | 5229 80 | 00 | 00 | 4919 46 | 5319 83 |
| * | 466 000 | 610 76 | 18100 00 | 598 70 | 4919 30 | 5229 80 | 4919 30 | 5220 00 | 4919 40 | 5212 59 |
| * | 468 000 | 612 62 | 18100 00 | 599 80 | 4931 50 | 5306 00 | 00 | 00 | 4895 00 | 5374 54 |
| * | 468 000 | 612 64 | 18100 00 | 599 80 | 4931 50 | 5306 00 | 4910 00 | 5290 00 | 4910 00 | 5280 96 |
| | 468 200 | 613 22 | 18100 00 | 599 90 | 4812 60 | 5189 40 | 00 | 00 | 4847 11 | 5294 80 |
| | 468 200 | 613 25 | 18100 00 | 599 90 | 4812 60 | 5189 40 | 4840 00 | 5190 00 | 4846 83 | 5178 00 |
| | 470 000 | 613 53 | 18100 00 | 599 80 | 4918 10 | 5323 30 | 00 | 00 | 4969 31 | 5299 80 |
| | 470 000 | 613 60 | 18100 00 | 599 80 | 4918 10 | 5323 30 | 4950 90 | 5381 70 | 4968 99 | 5300 03 |
| | 470 200 | 614 48 | 18100 00 | 599 90 | 4884 70 | 5296 70 | 00 | 00 | 4766 20 | 5438 34 |
| | 470 200 | 614 28 | 18100 00 | 599 90 | 4884 70 | 5296 70 | 4930 00 | 5408 00 | 4938 93 | 5408 00 |
| | 472 000 | 615 20 | 18100 00 | 600 60 | 4885 70 | 5268 20 | 00 | 00 | 4578 03 | 5464 33 |
| | 472 000 | 615 29 | 18100 00 | 600 60 | 4885 70 | 5268 20 | 4885 70 | 5401 70 | 4892 17 | 5401 70 |
| | 474 000 | 616 17 | 18000 00 | 601 10 | 4801 30 | 5179 90 | 00 | 00 | 4531 92 | 5427 10 |
| * | 474 000 | 616 38 | 18000 00 | 601 10 | 4801 30 | 5179 90 | 4800 00 | 5355 30 | 4808 38 | 5355 30 |
| | 476 000 | 616 63 | 18000 00 | 601 20 | 4826 90 | 5102 70 | 00 | 00 | 4668 74 | 5234 97 |
| | 476 000 | 616 85 | 18000 00 | 601 20 | 4826 90 | 5102 70 | 4830 00 | 5206 80 | 4853 29 | 5206 80 |

ESCONDIDO CK UPPER REACH

SUMMARY PRINTOUT TABLE 150

| | SECNO | XLCH | ELTRD | ELLC | ELMIN | Q | CWSEL | CRIWS | EG | 10*KS | VCH | AREA | 01K |
|---|---|---|---|---|---|---|---|---|---|---|---|---|---|
| * | 400 000 | 00 | 00 | 00 | 526 70 | 18700 00 | 538 33 | 538 33 | 541 57 | 94 38 | 16 35 | 1367 13 | 1924 9 |
| | 400 000 | 00 | 00 | 00 | 526 70 | 18700 00 | 539 31 | 00 | 541 76 | 63 00 | 14 24 | 1561 08 | 2355 9 |
| * | 402 000 | 305 40 | 00 | 00 | 529 80 | 18700 00 | 542 11 | 542 11 | 545 56 | 90 26 | 15 96 | 1338 00 | 1968 3 |
| * | 402 000 | 305 40 | 00 | 00 | 529 80 | 18700 00 | 542 14 | 542 14 | 545 57 | 89 06 | 15 89 | 1340 35 | 1981 5 |
| | 404 000 | 408 60 | 00 | 00 | 533 00 | 18700 00 | 546 37 | 00 | 548 60 | 58 49 | 12 34 | 1597 79 | 2445 2 |
| | 404 000 | 408 60 | 00 | 00 | 533 00 | 18700 00 | 546 36 | 00 | 548 60 | 58 78 | 12 36 | 1593 83 | 2439 1 |
| * | 406 000 | 528 00 | 00 | 00 | 537 20 | 18700 00 | 549 67 | 00 | 550 25 | 16 10 | 6 88 | 3100 05 | 4659 8 |
| * | 406 000 | 528 00 | 00 | 00 | 537 20 | 18700 00 | 549 70 | 00 | 550 48 | 20 42 | 7 63 | 2649 00 | 4137 9 |
| * | 408 000 | 378 00 | 00 | 00 | 538 80 | 18700 00 | 550 27 | 00 | 551 30 | 36 85 | 8 91 | 2348 50 | 3080 6 |
| | 408 000 | 378 00 | 00 | 00 | 538 80 | 18700 00 | 550 50 | 00 | 551 63 | 36 90 | 9 05 | 2212 37 | 3078 2 |
| * | 410 000 | 492 00 | 00 | 00 | 538 40 | 18700 00 | 553 03 | 553 03 | 556 19 | 71 03 | 15 26 | 1500 48 | 2218 8 |
| * | 410 000 | 492 00 | 00 | 00 | 538 40 | 18700 00 | 552 88 | 552 88 | 556 29 | 80 01 | 15 73 | 1402 30 | 2090 5 |
| * | 412 000 | 587 00 | 00 | 00 | 540 50 | 18700 00 | 557 18 | 00 | 557 84 | 12 02 | 6 77 | 3117 35 | 5393 5 |
| * | 412 000 | 587 00 | 00 | 00 | 540 50 | 18700 00 | 557 33 | 00 | 558 00 | 11 85 | 6 78 | 3036 02 | 5431 5 |
| * | 414 000 | 630 00 | 00 | 00 | 543 30 | 18700 00 | 557 75 | 00 | 559 53 | 47 70 | 12 33 | 1919 35 | 2707 4 |
| * | 414 000 | 630 00 | 00 | 00 | 543 30 | 18700 00 | 557 92 | 00 | 559 62 | 44 65 | 12 05 | 1952 11 | 2798 4 |
| * | 416 000 | 720 00 | 00 | 00 | 550 00 | 18700 00 | 562 73 | 562 73 | 564 72 | 46 94 | 12 83 | 1816 55 | 2729 3 |
| * | 416 000 | 720 00 | 00 | 00 | 550 00 | 18700 00 | 562 58 | 562 58 | 564 73 | 51 29 | 13 28 | 1745 34 | 2611 0 |
| * | 418 000 | 532 00 | 00 | 00 | 551 50 | 18700 00 | 565 40 | 00 | 566 44 | 21 48 | 9 80 | 2432 18 | 4034 9 |
| * | 418 000 | 532 00 | 00 | 00 | 551 50 | 18700 00 | 565 40 | 00 | 566 60 | 23 49 | 10 26 | 2188 50 | 3858 2 |
| * | 420 000 | 432 00 | 00 | 00 | 552 70 | 18700 00 | 566 37 | 566 37 | 568 39 | 47 03 | 13 90 | 1747 37 | 2726 8 |
| * | 420 000 | 432 00 | 00 | 00 | 552 70 | 18700 00 | 566 18 | 00 | 568 40 | 52 24 | 14 51 | 1670 30 | 2587 1 |
| | 422 000 | 262 00 | 00 | 00 | 552 50 | 18200 00 | 568 09 | 00 | 569 43 | 27 43 | 11 41 | 2092 35 | 3475 0 |
| | 422 000 | 262 00 | 00 | 00 | 552 50 | 18200 00 | 568 19 | 00 | 569 48 | 25 95 | 11 16 | 2136 61 | 3572 9 |
| | 428 000 | 62 40 | 00 | 00 | 552 80 | 18200 00 | 568 71 | 00 | 569 67 | 15 30 | 8 95 | 2470 49 | 4652 9 |
| | 428 000 | 62 40 | 00 | 00 | 552 80 | 18200 00 | 568 76 | 00 | 569 70 | 14 94 | 8 87 | 2493 02 | 4708 5 |
| * | 429 000 | 47 00 | 00 | 00 | 560 90 | 17940 00 | 568 47 | 00 | 570 12 | 48 88 | 11 03 | 1752 86 | 2565 9 |
| * | 429 000 | 47 00 | 00 | 00 | 560 90 | 17940 00 | 568 53 | 00 | 570 14 | 47 13 | 10 89 | 1775 15 | 2613 1 |
| | 430 000 | 20 00 | 00 | 00 | 557 10 | 18200 00 | 569 24 | 00 | 570 36 | 34 30 | 10 90 | 2361 80 | 3107 7 |
| | 430 000 | 20 00 | 00 | 00 | 557 10 | 18200 00 | 569 24 | 00 | 570 36 | 34 17 | 10 89 | 2364 86 | 3113 5 |
| * | 432 000 | 44 00 | 00 | 00 | 558 20 | 18200 00 | 570 14 | 570 14 | 572 77 | 75 67 | 15 16 | 1639 58 | 2092 1 |
| * | 432 000 | 44 00 | 00 | 00 | 558 20 | 18200 00 | 570 14 | 570 14 | 572 77 | 75 85 | 15 17 | 1638 07 | 2089 7 |

| | SECNO | XLCH | ELTRD | ELLC | ELMIN | Q | CWSEL | CRIWS | EG | 10*KS | VCH | AREA | 01K |
|---|---|---|---|---|---|---|---|---|---|---|---|---|---|
| * | 434 000 | 161 00 | 00 | 00 | 557 80 | 18200 00 | 572 76 | 572 76 | 575 61 | 72 60 | 16 03 | 1592 38 | 2135 9 |
| * | 434 000 | 161 00 | 00 | 00 | 557 80 | 18200 00 | 572 76 | 572 76 | 575 61 | 72 38 | 16 01 | 1594 19 | 2139 2 |
| * | 436 000 | 384 10 | 00 | 00 | 563 40 | 18200 00 | 576 36 | 576 36 | 580 73 | 103 15 | 18 04 | 1134 20 | 1792 0 |
| * | 436 000 | 384 10 | 00 | 00 | 563 40 | 18200 00 | 576 31 | 576 31 | 580 77 | 105 38 | 18 18 | 1124 27 | 1772 9 |
| * | 438 000 | 383 00 | 00 | 00 | 564 40 | 18200 00 | 581 45 | 00 | 582 38 | 16 81 | 8 26 | 2488 85 | 4439 2 |
| * | 438 000 | 383 00 | 00 | 00 | 564 40 | 18200 00 | 581 49 | 00 | 582 43 | 16 82 | 8 28 | 2456 22 | 4437 4 |
| * | 440 000 | 661 00 | 00 | 00 | 570 60 | 18200 00 | 584 15 | 584 15 | 588 90 | 119 98 | 17 48 | 1041 04 | 1661 5 |
| * | 440 000 | 661 00 | 00 | 00 | 570 60 | 18200 00 | 584 14 | 584 14 | 588 90 | 120 50 | 17 51 | 1039 48 | 1658 0 |
| * | 442 000 | 710 00 | 00 | 00 | 582 70 | 18200 00 | 601 85 | 601 85 | 605 46 | 67 83 | 16 57 | 1358 57 | 2209 7 |
| * | 442 000 | 710 00 | 00 | 00 | 582 70 | 18200 00 | 601 86 | 601 86 | 605 46 | 67 64 | 16 55 | 1360 49 | 2212 9 |
| * | 444 000 | 592 00 | 00 | 00 | 584 20 | 18200 00 | 605 89 | 00 | 607 65 | 20 02 | 11 22 | 1800 26 | 4067 5 |
| * | 444 000 | 592 00 | 00 | 00 | 584 20 | 18200 00 | 605 89 | 00 | 607 65 | 20 03 | 11 22 | 1799 89 | 4066 3 |
| | 446 000 | 171 00 | 00 | 00 | 584 80 | 18200 00 | 607 21 | 00 | 608 00 | 11 73 | 8 30 | 2884 77 | 5314 6 |
| | 446 000 | 171 00 | 00 | 00 | 584 80 | 18200 00 | 607 21 | 00 | 608 00 | 11 73 | 8 31 | 2883 67 | 5313 0 |
| * | 448 000 | 84 60 | 00 | 00 | 584 40 | 18200 00 | 607 64 | 00 | 608 15 | 5 73 | 6 23 | 3476 50 | 7600 4 |
| * | 448 000 | 84 60 | 00 | 00 | 584 40 | 18200 00 | 607 64 | 00 | 608 15 | 5 74 | 6 23 | 3475 86 | 7598 6 |
| | 449 000 | 37 00 | 00 | 00 | 586 00 | 18200 00 | 607 66 | 00 | 608 18 | 7 09 | 6 53 | 3401 15 | 6837 2 |
| | 449 000 | 37 00 | 00 | 00 | 586 00 | 18200 00 | 607 66 | 00 | 608 18 | 7 09 | 6 53 | 3400 49 | 6835 3 |
| | 450 000 | 49 00 | 00 | 00 | 586 10 | 18200 00 | 607 83 | 00 | 608 24 | 5 20 | 5 88 | 3866 52 | 7983 4 |
| | 450 000 | 49 00 | 00 | 00 | 586 10 | 18200 00 | 607 83 | 00 | 608 24 | 5 20 | 5 88 | 3864 90 | 7981 6 |
| | 452 000 | 86 00 | 00 | 00 | 586 30 | 18200 00 | 607 94 | 00 | 608 29 | 4 67 | 5 49 | 4187 72 | 8421 6 |
| | 452 000 | 86 00 | 00 | 00 | 586 30 | 18200 00 | 607 92 | 00 | 608 29 | 4 82 | 5 57 | 4074 42 | 8292 4 |
| | 454 000 | 254 00 | 00 | 00 | 586 50 | 18200 00 | 608 00 | 00 | 608 44 | 4 97 | 5 58 | 3702 69 | 8161 4 |
| | 454 000 | 254 00 | 00 | 00 | 586 50 | 18200 00 | 608 00 | 00 | 608 43 | 5 01 | 5 60 | 3670 64 | 8128 3 |
| | 456 000 | 420 00 | 00 | 00 | 587 30 | 18200 00 | 608 17 | 00 | 608 71 | 7 14 | 6 47 | 3367 55 | 6812 7 |
| | 456 000 | 420 00 | 00 | 00 | 587 30 | 18200 00 | 608 16 | 00 | 608 71 | 7 33 | 6 56 | 3303 22 | 6720 6 |
| | 458 000 | 366 00 | 00 | 00 | 588 40 | 18200 00 | 608 38 | 00 | 609 04 | 9 32 | 7 18 | 3048 64 | 5960 0 |
| | 458 000 | 366 00 | 00 | 00 | 588 40 | 18200 00 | 608 38 | 00 | 609 04 | 9 38 | 7 20 | 3032 40 | 5943 8 |
| * | 460 000 | 403 00 | 00 | 00 | 589 70 | 18200 00 | 608 50 | 00 | 609 73 | 19 09 | 8 90 | 2044 62 | 4165 6 |
| | 460 000 | 403 00 | 00 | 00 | 589 70 | 18200 00 | 608 51 | 00 | 609 74 | 19 06 | 8 90 | 2045 58 | 4168 9 |
| | 462 000 | 277 00 | 00 | 00 | 592 10 | 18200 00 | 609 46 | 00 | 610 18 | 10 96 | 6 79 | 2713 84 | 5498 6 |
| | 462 000 | 277 00 | 00 | 00 | 592 10 | 18200 00 | 609 47 | 00 | 610 19 | 11 29 | 6 82 | 2672 86 | 5417 7 |
| | 464 000 | 473 00 | 00 | 00 | 594 60 | 18100 00 | 609 93 | 00 | 610 93 | 18 81 | 8 08 | 2320 42 | 4172 9 |
| | 464 000 | 473 00 | 00 | 00 | 594 60 | 18100 00 | 609 94 | 00 | 610 96 | 19 14 | 8 16 | 2263 20 | 4136 7 |

| | SECNO | XLCH | ELTRD | ELLC | ELMIN | Q | CWSEL | CRIWS | EG | 10*KS | VCH | AREA | 01K |
|---|---|---|---|---|---|---|---|---|---|---|---|---|---|
| * | 466 000 | 365 00 | 00 | 00 | 598 70 | 18100 00 | 610 73 | 00 | 612 02 | 43 56 | 9 13 | 2019 54 | 2742 5 |
| * | 466 000 | 365 00 | 00 | 00 | 598 70 | 18100 00 | 610 76 | 00 | 612 05 | 43 43 | 9 14 | 1981 24 | 2746 3 |
| * | 468 000 | 425 00 | 00 | 00 | 599 80 | 18100 00 | 612 62 | 00 | 613 32 | 20 86 | 6 76 | 2773 18 | 3962 5 |
| * | 468 000 | 425 00 | 00 | 00 | 599 80 | 18100 00 | 612 64 | 00 | 613 36 | 21 12 | 6 82 | 2687 71 | 3938 3 |
| | 468 200 | 305 00 | 00 | 00 | 599 90 | 18100 00 | 613 22 | 00 | 613 95 | 20 42 | 6 89 | 2711 70 | 4005 4 |
| | 468 200 | 305 00 | 00 | 00 | 599 90 | 18100 00 | 613 25 | 00 | 614 01 | 20 89 | 6 98 | 2591 27 | 3960 4 |
| | 470 000 | 210 00 | 00 | 00 | 599 80 | 18100 00 | 613 53 | 00 | 614 65 | 40 31 | 8 49 | 2130 74 | 2850 8 |
| | 470 000 | 210 00 | 00 | 00 | 599 80 | 18100 00 | 613 60 | 00 | 614 70 | 39 04 | 8 41 | 2152 82 | 2896 9 |
| | 470 200 | 185 00 | 00 | 00 | 599 90 | 18100 00 | 614 48 | 00 | 615 34 | 34 22 | 7 10 | 2515 83 | 3094 2 |
| | 470 200 | 185 00 | 00 | 00 | 599 90 | 18100 00 | 614 28 | 00 | 615 44 | 41 61 | 8 29 | 2103 44 | 2805 9 |
| | 472 000 | 185 00 | 00 | 00 | 600 60 | 18100 00 | 615 20 | 00 | 615 82 | 23 33 | 6 29 | 2958 59 | 3747 0 |
| | 472 000 | 185 00 | 00 | 00 | 600 60 | 18100 00 | 615 29 | 00 | 616 00 | 25 39 | 6 59 | 2668 56 | 3591 9 |
| | 474 000 | 443 00 | 00 | 00 | 601 10 | 18000 00 | 616 17 | 00 | 616 59 | 12 60 | 5 50 | 3696 87 | 5070 2 |
| * | 474 000 | 443 00 | 00 | 00 | 601 10 | 18000 00 | 616 38 | 00 | 616 81 | 12 79 | 5 46 | 3440 19 | 5033 4 |
| | 476 000 | 467 00 | 00 | 00 | 601 20 | 18000 00 | 616 63 | 00 | 617 55 | 25 39 | 8 03 | 2457 91 | 3572 1 |
| | 476 000 | 467 00 | 00 | 00 | 601 20 | 18000 00 | 616 85 | 00 | 617 74 | 23 75 | 7 85 | 2428 46 | 3693 3 |

ESCONDIDO CK UPPER REACH

SUMMARY PRINTOUT TABLE 150

| | SECNO | Q | CWSEL | DIFWSP | DIFWSX | DIFKWS | TOPWID | XLCH |
|---|---|---|---|---|---|---|---|---|
| * | 400 000 | 18700 00 | 538 33 | 00 | 00 | -4 67 | 205 51 | 00 |
| | 400 000 | 18700 00 | 539 31 | 98 | 00 | 98 | 201 40 | 00 |
| * | 402 000 | 18700 00 | 542 11 | 00 | 3 77 | 00 | 194 84 | 305 40 |
| * | 402 000 | 18700 00 | 542 14 | 04 | 2 83 | 04 | 189 00 | 305 40 |
| | 404 000 | 18700 00 | 546 37 | 00 | 4 26 | 00 | 205 19 | 408 60 |
| | 404 000 | 18700 00 | 546 36 | - 01 | 4 22 | - 01 | 202 99 | 408 60 |
| * | 406 000 | 18700 00 | 549 67 | 00 | 3 30 | 00 | 388 17 | 528 00 |
| * | 406 000 | 18700 00 | 549 70 | 03 | 3 34 | 03 | 266 80 | 528 00 |
| * | 408 000 | 18700 00 | 550 27 | 00 | 61 | 00 | 372 64 | 378 00 |
| | 408 000 | 18700 00 | 550 50 | 23 | 80 | 23 | 279 50 | 378 00 |
| * | 410 000 | 18700 00 | 553 03 | 00 | 2 76 | 00 | 275 55 | 492 00 |
| * | 410 000 | 18700 00 | 552 88 | - 15 | 2 38 | - 15 | 232 03 | 492 00 |
| * | 412 000 | 18700 00 | 557 18 | 00 | 4 15 | 00 | 377 25 | 587 00 |
| * | 412 000 | 18700 00 | 557 33 | 15 | 4 45 | 15 | 320 00 | 587 00 |
| * | 414 000 | 18700 00 | 557 75 | 00 | 57 | 00 | 285 93 | 630 00 |
| * | 414 000 | 18700 00 | 557 92 | 17 | 58 | 17 | 267 90 | 630 00 |
| * | 416 000 | 18700 00 | 562 73 | 00 | 4 98 | 00 | 472 17 | 720 00 |
| * | 416 000 | 18700 00 | 562 58 | - 14 | 4 67 | - 14 | 444 24 | 720 00 |
| * | 418 000 | 18700 00 | 565 40 | 00 | 2 67 | 00 | 515 29 | 532 00 |
| * | 418 000 | 18700 00 | 565 40 | 00 | 2 82 | 00 | 341 00 | 532 00 |
| * | 420 000 | 18700 00 | 566 37 | 00 | 97 | 00 | 371 91 | 432 00 |
| * | 420 000 | 18700 00 | 566 18 | - 19 | 78 | - 19 | 333 10 | 432 00 |
| | 422 000 | 18200 00 | 568 09 | 00 | 1 72 | 00 | 409 66 | 262 00 |
| | 422 000 | 18200 00 | 568 19 | 11 | 2 01 | 11 | 409 50 | 262 00 |
| | 428 000 | 18200 00 | 568 71 | 00 | 62 | 00 | 393 46 | 62 40 |
| | 428 000 | 18200 00 | 568 76 | 05 | 56 | 05 | 393 40 | 62 40 |
| * | 429 000 | 17940 00 | 568 47 | 00 | - 24 | 00 | 376 09 | 47 00 |
| * | 429 000 | 17940 00 | 568 53 | 06 | - 23 | 06 | 376 00 | 47 00 |
| | 430 000 | 18200 00 | 569 24 | 00 | 77 | 00 | 363 00 | 20 00 |
| | 430 000 | 18200 00 | 569 24 | 01 | 72 | 01 | 363 00 | 20 00 |
| * | 432 000 | 18200 00 | 570 14 | 00 | 91 | 00 | 318 43 | 44 00 |
| * | 432 000 | 18200 00 | 570 14 | 00 | 89 | 00 | 318 39 | 44 00 |

| | SECNO | Q | CWSEL | DIFWSP | DIFWSX | DIFKWS | TOPWID | XLCH |
|---|---|---|---|---|---|---|---|---|
| * | 434 000 | 18200 00 | 572 76 | 00 | 2 61 | 00 | 261 23 | 161 00 |
| * | 434 000 | 18200 00 | 572 76 | 01 | 2 63 | 01 | 261 20 | 161 00 |
| * | 436 000 | 18200 00 | 576 36 | 00 | 3 60 | 00 | 133 01 | 384 10 |
| * | 436 000 | 18200 00 | 576 31 | - 04 | 3 55 | - 04 | 129 27 | 384 10 |
| * | 438 000 | 18200 00 | 581 45 | 00 | 5 10 | 00 | 249 17 | 383 00 |
| * | 438 000 | 18200 00 | 581 49 | 04 | 5 18 | 04 | 230 30 | 383 00 |
| * | 440 000 | 18200 00 | 584 15 | 00 | 2 70 | 00 | 111 68 | 661 00 |
| * | 440 000 | 18200 00 | 584 14 | - 01 | 2 65 | - 01 | 111 63 | 661 00 |
| * | 442 000 | 18200 00 | 601 85 | 00 | 17 70 | 00 | 226 10 | 710 00 |
| * | 442 000 | 18200 00 | 601 86 | 01 | 17 72 | 01 | 226 10 | 710 00 |
| * | 444 000 | 18200 00 | 605 89 | 00 | 4 04 | 00 | 118 13 | 592 00 |
| * | 444 000 | 18200 00 | 605 89 | 00 | 4 03 | 00 | 118 10 | 592 00 |
| | 446 000 | 18200 00 | 607 21 | 00 | 1 32 | 00 | 314 06 | 171 00 |
| | 446 000 | 18200 00 | 607 21 | 00 | 1 32 | 00 | 305 00 | 171 00 |
| * | 448 000 | 18200 00 | 607 64 | 00 | 43 | 00 | 289 25 | 84 60 |
| * | 448 000 | 18200 00 | 607 64 | 00 | 43 | 00 | 289 24 | 84 60 |
| | 449 000 | 18200 00 | 607 66 | 00 | 01 | 00 | 293 21 | 37 00 |
| | 449 000 | 18200 00 | 607 66 | 00 | 01 | 00 | 292 81 | 37 00 |
| | 450 000 | 18200 00 | 607 83 | 00 | 18 | 00 | 321 73 | 49 00 |
| | 450 000 | 18200 00 | 607 83 | 00 | 18 | 00 | 315 00 | 49 00 |
| | 452 000 | 18200 00 | 607 94 | 00 | 11 | 00 | 349 21 | 86 00 |
| | 452 000 | 18200 00 | 607 92 | - 02 | 09 | - 02 | 323 00 | 86 00 |
| | 454 000 | 18200 00 | 608 00 | 00 | 07 | 00 | 295 37 | 254 00 |
| | 454 000 | 18200 00 | 608 00 | - 01 | 08 | - 01 | 275 80 | 254 00 |
| | 456 000 | 18200 00 | 608 17 | 00 | 17 | 00 | 292 89 | 420 00 |
| | 456 000 | 18200 00 | 608 16 | - 01 | 16 | - 01 | 280 85 | 420 00 |
| | 458 000 | 18200 00 | 608 38 | 00 | 21 | 00 | 272 72 | 366 00 |
| | 458 000 | 18200 00 | 608 38 | 00 | 22 | 00 | 265 00 | 366 00 |
| * | 460 000 | 18200 00 | 608 50 | 00 | 13 | 00 | 151 01 | 403 00 |
| | 460 000 | 18200 00 | 608 51 | 01 | 13 | 01 | 150 98 | 403 00 |
| | 462 000 | 18200 00 | 609 46 | 00 | 96 | 00 | 227 54 | 277 00 |
| | 462 000 | 18200 00 | 609 47 | 00 | 96 | 00 | 205 50 | 277 00 |
| | 464 000 | 18100 00 | 609 93 | 00 | 47 | 00 | 266 32 | 473 00 |
| | 464 000 | 18100 00 | 609 94 | 00 | 47 | 00 | 230 00 | 473 00 |

| | SECNO | Q | CWSEL | DIFWSP | DIFWSX | DIFKWS | TOPWID | XLCH |
|---|---|---|---|---|---|---|---|---|
| * | 466 000 | 18100 00 | 610 73 | 00 | 80 | 00 | 367 91 | 365 00 |
| * | 466 000 | 18100 00 | 610 76 | 03 | 82 | 03 | 293 19 | 365 00 |
| * | 468 000 | 18100 00 | 612 62 | 00 | 1 89 | 00 | 444 32 | 425 00 |
| * | 468 000 | 18100 00 | 612 64 | 02 | 1 88 | 02 | 370 96 | 425 00 |
| | 468 200 | 18100 00 | 613 22 | 00 | 61 | 00 | 422 77 | 305 00 |
| | 468 200 | 18100 00 | 613 25 | 03 | 61 | 03 | 331 17 | 305 00 |
| | 470 000 | 18100 00 | 613 53 | 00 | 31 | 00 | 330 49 | 210 00 |
| | 470 000 | 18100 00 | 613 60 | 07 | 35 | 07 | 331 04 | 210 00 |
| | 470 200 | 18100 00 | 614 48 | 00 | 95 | 00 | 460 40 | 185 00 |
| | 470 200 | 18100 00 | 614 28 | - 20 | 68 | - 20 | 324 67 | 185 00 |
| | 472 000 | 18100 00 | 615 20 | 00 | 71 | 00 | 629 33 | 185 00 |
| | 472 000 | 18100 00 | 615 29 | 09 | 1 01 | 09 | 417 82 | 185 00 |
| | 474 000 | 18000 00 | 616 17 | 00 | 98 | 00 | 781 84 | 443 00 |
| * | 474 000 | 18000 00 | 616 38 | 21 | 1 09 | 21 | 475 17 | 443 00 |
| | 476 000 | 18000 00 | 616 63 | 00 | 45 | 00 | 483 04 | 467 00 |
| | 476 000 | 18000 00 | 616 85 | 22 | 47 | 22 | 323 57 | 467 00 |

SUMMARY OF ERRORS AND SPECIAL NOTES

```
CAUTION SECNO=    400 000  PROFILE=  1  CRITICAL DEPTH ASSUMED

CAUTION SECNO=    402 000  PROFILE=  1  CRITICAL DEPTH ASSUMED
CAUTION SECNO=    402 000  PROFILE=  1  MINIMUM SPECIFIC ENERGY
CAUTION SECNO=    402 000  PROFILE=  2  CRITICAL DEPTH ASSUMED
CAUTION SECNO=    402 000  PROFILE=  2  PROBABLE MINIMUM SPECIFIC ENERGY
CAUTION SECNO=    402 000  PROFILE=  2  20 TRIALS ATTEMPTED TO BALANCE WSEL

WARNING SECNO=    406 000  PROFILE=  1  CONVEYANCE CHANGE OUTSIDE ACCEPTABLE RANGE
WARNING SECNO=    406 000  PROFILE=  2  CONVEYANCE CHANGE OUTSIDE ACCEPTABLE RANGE

WARNING SECNO=    408 000  PROFILE=  1  CONVEYANCE CHANGE OUTSIDE ACCEPTABLE RANGE

CAUTION SECNO=    410 000  PROFILE=  1  CRITICAL DEPTH ASSUMED
CAUTION SECNO=    410 000  PROFILE=  1  PROBABLE MINIMUM SPECIFIC ENERGY
CAUTION SECNO=    410 000  PROFILE=  1  20 TRIALS ATTEMPTED TO BALANCE WSEL
CAUTION SECNO=    410 000  PROFILE=  2  CRITICAL DEPTH ASSUMED
CAUTION SECNO=    410 000  PROFILE=  2  PROBABLE MINIMUM SPECIFIC ENERGY
CAUTION SECNO=    410 000  PROFILE=  2  20 TRIALS ATTEMPTED TO BALANCE WSEL

WARNING SECNO=    412 000  PROFILE=  1  CONVEYANCE CHANGE OUTSIDE ACCEPTABLE RANGE
WARNING SECNO=    412 000  PROFILE=  2  CONVEYANCE CHANGE OUTSIDE ACCEPTABLE RANGE

WARNING SECNO=    414 000  PROFILE=  1  CONVEYANCE CHANGE OUTSIDE ACCEPTABLE RANGE
WARNING SECNO=    414 000  PROFILE=  2  CONVEYANCE CHANGE OUTSIDE ACCEPTABLE RANGE

CAUTION SECNO=    416 000  PROFILE=  1  CRITICAL DEPTH ASSUMED
CAUTION SECNO=    416 000  PROFILE=  1  MINIMUM SPECIFIC ENERGY
CAUTION SECNO=    416 000  PROFILE=  2  CRITICAL DEPTH ASSUMED
CAUTION SECNO=    416 000  PROFILE=  2  MINIMUM SPECIFIC ENERGY

WARNING SECNO=    418 000  PROFILE=  1  CONVEYANCE CHANGE OUTSIDE ACCEPTABLE RANGE
WARNING SECNO=    418 000  PROFILE=  2  CONVEYANCE CHANGE OUTSIDE ACCEPTABLE RANGE

CAUTION SECNO=    420 000  PROFILE=  1  CRITICAL DEPTH ASSUMED
CAUTION SECNO=    420 000  PROFILE=  1  MINIMUM SPECIFIC ENERGY
WARNING SECNO=    420 000  PROFILE=  2  CONVEYANCE CHANGE OUTSIDE ACCEPTABLE RANGE

WARNING SECNO=    429 000  PROFILE=  1  CONVEYANCE CHANGE OUTSIDE ACCEPTABLE RANGE
WARNING SECNO=    429 000  PROFILE=  2  CONVEYANCE CHANGE OUTSIDE ACCEPTABLE RANGE

CAUTION SECNO=    432 000  PROFILE=  1  CRITICAL DEPTH ASSUMED
CAUTION SECNO=    432 000  PROFILE=  1  PROBABLE MINIMUM SPECIFIC ENERGY
CAUTION SECNO=    432 000  PROFILE=  1  20 TRIALS ATTEMPTED TO BALANCE WSEL
CAUTION SECNO=    432 000  PROFILE=  2  CRITICAL DEPTH ASSUMED
CAUTION SECNO=    432 000  PROFILE=  2  PROBABLE MINIMUM SPECIFIC ENERGY
CAUTION SECNO=    432 000  PROFILE=  2  20 TRIALS ATTEMPTED TO BALANCE WSEL

CAUTION SECNO=    434 000  PROFILE=  1  CRITICAL DEPTH ASSUMED
CAUTION SECNO=    434 000  PROFILE=  1  PROBABLE MINIMUM SPECIFIC ENERGY
CAUTION SECNO=    434 000  PROFILE=  1  20 TRIALS ATTEMPTED TO BALANCE WSEL
```

```
CAUTION SECNO=    434 000  PROFILE=  2  CRITICAL DEPTH ASSUMED
CAUTION SECNO=    434 000  PROFILE=  2  PROBABLE MINIMUM SPECIFIC ENERGY
CAUTION SECNO=    434 000  PROFILE=  2  20 TRIALS ATTEMPTED TO BALANCE WSEL

CAUTION SECNO=    436 000  PROFILE=  1  CRITICAL DEPTH ASSUMED
CAUTION SECNO=    436 000  PROFILE=  1  PROBABLE MINIMUM SPECIFIC ENERGY
CAUTION SECNO=    436 000  PROFILE=  1  20 TRIALS ATTEMPTED TO BALANCE WSEL
CAUTION SECNO=    436 000  PROFILE=  2  CRITICAL DEPTH ASSUMED
CAUTION SECNO=    436 000  PROFILE=  2  PROBABLE MINIMUM SPECIFIC ENERGY
CAUTION SECNO=    436 000  PROFILE=  2  20 TRIALS ATTEMPTED TO BALANCE WSEL

WARNING SECNO=    438 000  PROFILE=  1  CONVEYANCE CHANGE OUTSIDE ACCEPTABLE RANGE
WARNING SECNO=    438 000  PROFILE=  2  CONVEYANCE CHANGE OUTSIDE ACCEPTABLE RANGE

CAUTION SECNO=    440 000  PROFILE=  1  CRITICAL DEPTH ASSUMED
CAUTION SECNO=    440 000  PROFILE=  1  PROBABLE MINIMUM SPECIFIC ENERGY
CAUTION SECNO=    440 000  PROFILE=  1  20 TRIALS ATTEMPTED TO BALANCE WSEL
CAUTION SECNO=    440 000  PROFILE=  2  CRITICAL DEPTH ASSUMED
CAUTION SECNO=    440 000  PROFILE=  2  PROBABLE MINIMUM SPECIFIC ENERGY
CAUTION SECNO=    440 000  PROFILE=  2  20 TRIALS ATTEMPTED TO BALANCE WSEL

CAUTION SECNO=    442 000  PROFILE=  1  CRITICAL DEPTH ASSUMED
CAUTION SECNO=    442 000  PROFILE=  1  PROBABLE MINIMUM SPECIFIC ENERGY
CAUTION SECNO=    442 000  PROFILE=  1  20 TRIALS ATTEMPTED TO BALANCE WSEL
CAUTION SECNO=    442 000  PROFILE=  2  CRITICAL DEPTH ASSUMED
CAUTION SECNO=    442 000  PROFILE=  2  PROBABLE MINIMUM SPECIFIC ENERGY
CAUTION SECNO=    442 000  PROFILE=  2  20 TRIALS ATTEMPTED TO BALANCE WSEL

WARNING SECNO=    444 000  PROFILE=  1  CONVEYANCE CHANGE OUTSIDE ACCEPTABLE RANGE
WARNING SECNO=    444 000  PROFILE=  2  CONVEYANCE CHANGE OUTSIDE ACCEPTABLE RANGE

WARNING SECNO=    448 000  PROFILE=  1  CONVEYANCE CHANGE OUTSIDE ACCEPTABLE RANGE
WARNING SECNO=    448 000  PROFILE=  2  CONVEYANCE CHANGE OUTSIDE ACCEPTABLE RANGE

WARNING SECNO=    460 000  PROFILE=  1  CONVEYANCE CHANGE OUTSIDE ACCEPTABLE RANGE

WARNING SECNO=    466 000  PROFILE=  1  CONVEYANCE CHANGE OUTSIDE ACCEPTABLE RANGE
WARNING SECNO=    466 000  PROFILE=  2  CONVEYANCE CHANGE OUTSIDE ACCEPTABLE RANGE

WARNING SECNO=    468 000  PROFILE=  1  CONVEYANCE CHANGE OUTSIDE ACCEPTABLE RANGE
WARNING SECNO=    468 000  PROFILE=  2  CONVEYANCE CHANGE OUTSIDE ACCEPTABLE RANGE

WARNING SECNO=    474 000  PROFILE=  2  CONVEYANCE CHANGE OUTSIDE ACCEPTABLE RANGE
```

# APPENDIX H

## 100-Year HEC-2 Analyses for the Pre- and Post-Project Conditions

```
*****************************************
*  HEC-2 WATER SURFACE PROFILES          *
*                                        *
*  Version   4 6 2,  May 1991            *
*                                        *
*  RUN DATE    05MAY05    TIME   08 02 02 *
*****************************************
```

```
*************************************
*  U S  ARMY CORPS OF ENGINEERS
*  HYDROLOGIC ENGINEERING CENTER
*  609 SECOND STREET, SUITE D
*  DAVIS, CALIFORNIA 95616-4687
*          (916) 756-1104
*************************************
```

```
X     X  XXXXXXX   XXXXX              XXXXX
X     X  X        X     X            X     X
X     X  X        X                        X
XXXXXXX  XXXX     X          XXXXX    XXXXX
X     X  X        X                  X
X     X  X        X     X            X
X     X  XXXXXXX   XXXXX             XXXXXXX
```

THIS RUN EXECUTED 05MAY05 08 02 02

```
************************************
 HEC-2 WATER SURFACE PROFILES

 Version   4 6 2,  May 1991
************************************
```

THIS IS AN ARCHIVAL RUN ALL DATA AND RESULTS ARE SAVED ON UNIT 96

```
AC CROSS-SECTIONS GENERATED FROM INROADS
AC CROSS-SECTION 1175 IS A RIPRAP DROP STRUCTURE (D/S OF COUNTRY CLUB DR )
AC CROSS-SECTION 1225 AND 1250 MODEL THE DIP SECTION AT COUNTRY CLUB DR
AC       PER COUNTY OF SAN DIEGO HEC-2 ANALYSIS 260 CFS IS CONVEYED UNDER ROAD
AC       MODELED AS SECTUIN OVER TOP OF ROAD
T1 HARMONY GROVE VILLAGE  J-14312B   MARCH 28, 2005 (CURRENT CONDITION)
T2 100-YEAR FLOODPLAIN ANALYSIS FOR ESCONDIDO CREEK (Q100= 19000 CFS)
T3 FILENAME  14312BCC HC2

J1  ICHECK    INQ       NINV      IDIR      STRT      METRIC    HVINS     Q         WSEL      FQ

      0         2         0         0         0         0         0         0    559 00       0 0

J2  NPROF     IPLOT     PRFVS     XSECV     XSECH     FN        ALLDC     IBW       CHNIM     ITRACE

      1         0        -1         0         0         0        -1         0         0         15


J3  VARIABLE CODES FOR SUMMARY PRINTOUT

    150         38         43          1          2         66

NC      045        060        040          1          3
QT        1      19000

X1      100         67     163 56     223 26       0 00       0 00       0 00
GR    570 1       0 00     569 91       0 40     567 65       4 80     567 02       6 16     558 13      25 46
GR    557 2      28 62     554 53      41 18     552 72      49 05     551 66      53 57     551 43      56 89
GR    550 5      71 37     550 69      82 10     550 74      86 05     550 61      89 33     550 00     108 41
GR    549 9     112 93     549 74     139 10     549 73     142 27     549 70     144 75     549 33     162 68
GR    548 9     163 49     548 82     163 56     547 28     166 01     542 02     174 36     541 86     177 88
GR    541 5     185 90     541 65     196 57     541 73     202 75     542 94     206 05     546 80     216 06
GR    549 9     222 55     550 14     223 26     552 05     228 12     553 30     231 90     554 20     244 71
GR    554 5     250 49     554 23     275 76     554 17     281 52     554 75     287 20     556 35     302 92
GR    556 5     304 48     557 12     306 67     561 05     321 08     561 98     336 28     562 01     336 59
GR    562 0     337 29     562 55     345 60     562 79     349 09     562 68     352 16     562 60     354 88
GR    562 4     361 10     565 64     365 59     566 50     366 81     567 44     379 69     567 79     384 20
GR    567 5     384 87     564 15     392 91     563 88     394 15     562 34     400 93     561 99     402 53
GR    562 6     416 84     562 76     420 80     563 45     424 99     566 28     441 01     566 83     443 46
GR    569 6     455 70     569 97     457 50
```

| | | | | | | | | | | |
|---|---|---|---|---|---|---|---|---|---|---|
| X1 | 200 | 56 | 208 35 | 256 11 | 50 15 | 132 85 | 118 00 | | | |
| GR | 569 9 | 0 00 | 566 59 | 5 59 | 565 33 | 8 35 | 558 15 | 23 11 | 556 86 | 27 63 |
| GR | 552 8 | 40 28 | 550 96 | 60 28 | 550 88 | 61 52 | 550 82 | 63 51 | 550 18 | 82 56 |
| GR | 550 0 | 90 12 | 549 69 | 100 72 | 549 54 | 106 61 | 549 39 | 116 16 | 549 25 | 133 69 |
| GR | 548 9 | 142 51 | 548 30 | 163 05 | 548 55 | 173 68 | 548 84 | 185 75 | 548 24 | 205 60 |
| GR | 548 2 | 208 22 | 548 12 | 208 35 | 547 44 | 210 70 | 544 96 | 218 72 | 543 12 | 224 60 |
| GR | 541 7 | 228 50 | 541 76 | 236 89 | 541 83 | 242 58 | 542 60 | 243 83 | 544 82 | 247 35 |
| GR | 549 9 | 256 11 | 550 06 | 256 36 | 550 99 | 258 06 | 551 17 | 267 39 | 552 52 | 279 53 |
| GR | 553 1 | 284 42 | 556 09 | 290 56 | 560 82 | 299 08 | 561 27 | 304 35 | 561 81 | 310 55 |
| GR | 562 1 | 313 34 | 562 71 | 320 99 | 562 96 | 323 74 | 562 76 | 328 78 | 562 58 | 334 49 |
| GR | 564 7 | 337 01 | 566 88 | 339 81 | 567 96 | 354 51 | 568 10 | 356 68 | 568 20 | 360 00 |
| GR | 568 6 | 374 34 | 568 91 | 391 06 | 568 98 | 394 84 | 569 64 | 407 88 | 569 85 | 413 29 |
| GR | 570 0 | 415 48 | | | | | | | | |

| | | | | | | | | | | |
|---|---|---|---|---|---|---|---|---|---|---|
| X1 | 400 | 68 | 184 71 | 224 58 | 92 97 | 210 98 | 184 00 | | | |
| GR | 570 0 | 0 00 | 566 71 | 8 00 | 562 41 | 21 97 | 559 48 | 31 19 | 558 07 | 36 78 |
| GR | 554 4 | 52 34 | 554 36 | 55 05 | 553 47 | 70 44 | 552 98 | 79 29 | 552 91 | 81 08 |
| GR | 552 1 | 99 90 | 551 72 | 109 85 | 551 55 | 113 40 | 550 23 | 141 62 | 550 18 | 153 11 |
| GR | 550 2 | 160 99 | 550 03 | 173 29 | 549 85 | 182 43 | 549 83 | 182 85 | 549 77 | 182 92 |
| GR | 548 0 | 184 71 | 545 86 | 186 80 | 544 49 | 187 91 | 543 07 | 190 48 | 542 94 | 202 87 |
| GR | 542 8 | 215 44 | 546 97 | 219 58 | 547 98 | 220 42 | 548 97 | 222 24 | 550 04 | 224 31 |
| GR | 550 2 | 224 58 | 552 22 | 228 49 | 552 05 | 245 35 | 552 04 | 246 20 | 552 03 | 246 37 |
| GR | 552 0 | 246 97 | 552 82 | 264 76 | 557 71 | 278 91 | 559 58 | 284 56 | 559 66 | 287 88 |
| GR | 560 0 | 293 30 | 560 57 | 300 37 | 560 91 | 303 33 | 561 05 | 306 81 | 561 80 | 321 35 |
| GR | 562 7 | 335 52 | 563 50 | 352 71 | 563 68 | 356 56 | 563 82 | 359 17 | 564 22 | 365 98 |
| GR | 564 8 | 376 29 | 564 89 | 378 32 | 565 29 | 387 28 | 565 10 | 392 58 | 565 11 | 397 13 |
| GR | 565 1 | 397 19 | 565 13 | 400 25 | 565 20 | 402 73 | 565 32 | 404 61 | 565 53 | 406 03 |
| GR | 565 9 | 414 66 | 566 48 | 434 27 | 566 55 | 435 10 | 566 84 | 437 85 | 566 89 | 438 65 |
| GR | 567 3 | 441 94 | 567 62 | 446 40 | 567 83 | 449 13 | | | | |

| | | | | | | | | | | |
|---|---|---|---|---|---|---|---|---|---|---|
| NC | 0 030 | 0 030 | 0 045 | | | | | | | |
| X1 | 500 | 65 | 104 86 | 159 61 | 73 42 | 206 86 | 160 00 | | | |
| GR | 570 2 | 0 00 | 566 44 | 7 30 | 562 01 | 17 64 | 558 88 | 26 47 | 555 62 | 41 81 |
| GR | 554 4 | 47 97 | 554 21 | 50 34 | 553 44 | 65 40 | 553 16 | 68 41 | 552 31 | 81 96 |
| GR | 551 9 | 88 23 | 551 78 | 89 99 | 551 21 | 94 76 | 549 99 | 104 86 | 549 99 | 104 88 |
| GR | 549 5 | 108 50 | 547 67 | 111 14 | 545 16 | 114 95 | 543 72 | 122 27 | 543 31 | 123 84 |
| GR | 543 4 | 129 87 | 543 49 | 137 56 | 543 48 | 145 21 | 543 82 | 146 61 | 544 29 | 148 19 |
| GR | 545 8 | 152 73 | 547 70 | 154 79 | 551 99 | 159 28 | 552 30 | 159 61 | 553 44 | 174 27 |
| GR | 553 5 | 175 43 | 553 49 | 176 37 | 553 44 | 179 48 | 553 33 | 188 68 | 553 51 | 192 74 |
| GR | 553 6 | 196 29 | 553 81 | 206 45 | 553 20 | 210 77 | 552 19 | 219 10 | 552 06 | 227 65 |
| GR | 552 0 | 230 12 | 553 43 | 238 47 | 553 54 | 239 08 | 553 54 | 239 28 | 553 84 | 256 51 |
| GR | 555 3 | 262 85 | 558 04 | 274 02 | 558 49 | 285 51 | 559 65 | 308 23 | 559 66 | 308 32 |
| GR | 559 7 | 308 41 | 559 66 | 309 92 | 559 65 | 316 88 | 559 44 | 323 02 | 559 63 | 335 03 |
| GR | 559 9 | 347 98 | 559 93 | 349 83 | 560 84 | 372 75 | 560 89 | 375 95 | 561 03 | 384 96 |
| GR | 561 1 | 386 75 | 561 50 | 387 89 | 565 50 | 398 05 | 565 97 | 402 91 | 566 13 | 404 43 |

| | | | | | | | | | | |
|---|---|---|---|---|---|---|---|---|---|---|
| X1 | 600 | 46 | 56 57 | 115 79 | 130 94 | 168 90 | 165 00 | | | |
| GR | 580 0 | 0 00 | 579 22 | 1 76 | 564 94 | 22 88 | 564 58 | 23 37 | 564 38 | 23 74 |
| GR | 556 8 | 40 65 | 555 96 | 43 74 | 552 67 | 54 15 | 552 07 | 56 57 | 550 04 | 64 79 |
| GR | 548 5 | 71 65 | 547 93 | 74 12 | 547 39 | 86 16 | 546 60 | 103 51 | 551 46 | 114 40 |
| GR | 552 2 | 115 79 | 553 68 | 118 70 | 554 19 | 120 22 | 554 61 | 145 35 | 554 64 | 147 17 |
| GR | 554 7 | 149 09 | 554 77 | 170 59 | 554 95 | 177 40 | 555 66 | 187 34 | 555 91 | 195 81 |
| GR | 556 5 | 210 35 | 557 64 | 224 82 | 558 65 | 234 29 | 558 65 | 234 92 | 558 65 | 237 24 |
| GR | 558 7 | 242 46 | 558 65 | 243 86 | 558 52 | 245 30 | 558 20 | 255 78 | 559 62 | 282 77 |
| GR | 559 7 | 284 68 | 559 97 | 295 65 | 560 44 | 314 99 | 560 45 | 317 38 | 560 63 | 342 46 |
| GR | 561 1 | 349 64 | 562 53 | 367 45 | 563 99 | 380 45 | 564 10 | 382 61 | 564 53 | 384 11 |
| GR | 566 2 | 393 05 | | | | | | | | |

| | | | | | | | | | | |
|---|---|---|---|---|---|---|---|---|---|---|
| X1 | 700 | 56 | 69 28 | 141 26 | 241 23 | 236 94 | 253 00 | | | |
| GR | 590 1 | 0 00 | 588 79 | 3 17 | 587 05 | 6 34 | 584 96 | 9 20 | 580 66 | 15 79 |
| GR | 573 5 | 30 86 | 572 32 | 33 36 | 569 93 | 38 56 | 561 49 | 54 45 | 559 93 | 57 55 |
| GR | 554 9 | 67 34 | 554 16 | 69 28 | 553 45 | 71 12 | 552 04 | 73 99 | 550 49 | 79 33 |
| GR | 548 1 | 87 31 | 548 14 | 116 50 | 548 14 | 116 70 | 548 29 | 117 16 | 554 97 | 138 14 |
| GR | 556 0 | 141 26 | 556 00 | 141 36 | 556 55 | 143 08 | 556 62 | 147 66 | 556 88 | 175 43 |
| GR | 556 9 | 204 74 | 556 94 | 214 90 | 556 62 | 231 67 | 556 57 | 244 24 | 556 87 | 261 47 |
| GR | 557 2 | 273 73 | 557 49 | 281 08 | 559 38 | 325 32 | 559 54 | 333 07 | 559 46 | 355 66 |
| GR | 559 4 | 365 46 | 559 09 | 384 22 | 559 00 | 392 47 | 558 97 | 412 74 | 559 17 | 423 42 |
| GR | 559 3 | 440 28 | 559 44 | 454 21 | 559 84 | 474 80 | 560 06 | 484 77 | 560 87 | 505 93 |
| GR | 561 1 | 513 17 | 561 41 | 517 17 | 562 56 | 533 66 | 563 89 | 548 78 | 564 15 | 551 17 |
| GR | 564 5 | 553 76 | 566 34 | 567 84 | 567 48 | 581 49 | 567 66 | 583 55 | 568 18 | 585 32 |
| GR | 570 2 | 591 79 | | | | | | | | |

| | | | | | | | | | | |
|---|---|---|---|---|---|---|---|---|---|---|
| X1 | 800 | 55 | 240 25 | 310 74 | 300 31 | 191 90 | 259 00 | | | |
| GR | 570 06 | 47 31 | 569 71 | 49 37 | 567 33 | 59 63 | 565 5 | 72 09 | 564 77 | 76 57 |
| GR | 563 54 | 92 63 | 563 37 | 95 54 | 563 16 | 98 18 | 561 9 | 120 27 | 560 61 | 142 79 |
| GR | 560 34 | 144 72 | 556 44 | 170 25 | 556 08 | 178 30 | 556 0 | 200 26 | 555 95 | 202 42 |
| GR | 555 32 | 233 33 | 555 41 | 235 36 | 554 16 | 240 25 | 554 0 | 240 87 | 551 53 | 249 09 |
| GR | 548 14 | 259 76 | 548 13 | 292 71 | 548 71 | 295 70 | 555 3 | 309 94 | 555 70 | 310 74 |
| GR | 555 98 | 311 30 | 556 53 | 312 92 | 557 82 | 332 46 | 558 3 | 337 22 | 558 60 | 341 16 |
| GR | 559 76 | 371 62 | 560 47 | 393 40 | 560 47 | 394 36 | 560 7 | 420 98 | 560 70 | 428 72 |
| GR | 560 61 | 458 38 | 560 64 | 475 54 | 560 58 | 485 02 | 560 4 | 504 50 | 560 11 | 528 13 |
| GR | 560 10 | 530 72 | 560 38 | 555 83 | 560 81 | 586 37 | 560 9 | 589 36 | 561 79 | 620 17 |
| GR | 562 49 | 640 63 | 563 53 | 668 50 | 564 33 | 684 42 | 565 3 | 704 96 | 565 60 | 710 15 |
| GR | 566 31 | 720 86 | 567 78 | 740 26 | 568 87 | 746 12 | 569 6 | 750 33 | 570 18 | 753 79 |

| | | | | | | | | | | |
|---|---|---|---|---|---|---|---|---|---|---|
| X1 | 900 | 67 | 111 15 | 215 76 | 325 65 | 270 45 | 362 00 | | | |
| GR | 580 0 | 0 00 | 578 02 | 5 24 | 575 03 | 13 60 | 571 25 | 24 52 | 569 53 | 29 54 |
| GR | 565 2 | 40 58 | 564 93 | 41 62 | 564 68 | 42 55 | 563 60 | 47 18 | 562 62 | 51 07 |
| GR | 561 4 | 56 41 | 560 83 | 58 57 | 560 41 | 59 93 | 559 41 | 62 85 | 558 65 | 64 33 |
| GR | 558 4 | 70 30 | 558 16 | 74 72 | 558 07 | 79 76 | 557 64 | 92 00 | 557 31 | 105 48 |
| GR | 557 3 | 108 32 | 556 95 | 108 96 | 556 14 | 111 15 | 554 09 | 116 71 | 549 21 | 124 77 |
| GR | 548 2 | 126 31 | 548 26 | 147 37 | 550 40 | 151 75 | 551 02 | 166 39 | 550 72 | 177 12 |
| GR | 550 7 | 180 56 | 550 73 | 202 21 | 551 81 | 206 58 | 552 67 | 209 71 | 553 43 | 210 83 |
| GR | 555 6 | 213 90 | 556 77 | 215 76 | 556 95 | 223 14 | 557 48 | 238 20 | 557 51 | 243 04 |
| GR | 557 7 | 257 66 | 558 31 | 275 32 | 558 60 | 290 23 | 560 00 | 294 60 | 561 02 | 297 92 |
| GR | 561 3 | 309 72 | 561 59 | 318 60 | 561 83 | 346 73 | 562 34 | 369 63 | 562 37 | 374 92 |

| | | | | | | | | | | |
|---|---|---|---|---|---|---|---|---|---|---|
| GR | 562 3 | 391 85 | 562 54 | 405 54 | 562 80 | 418 65 | 563 08 | 437 44 | 563 24 | 446 05 |
| GR | 563 7 | 471 80 | 563 65 | 477 15 | 563 77 | 499 13 | 564 31 | 512 63 | 564 83 | 526 62 |
| GR | 565 8 | 545 73 | 566 07 | 551 03 | 566 29 | 553 52 | 567 53 | 572 58 | 568 44 | 582 08 |
| GR | 568 6 | 583 88 | 572 04 | 593 74 | | | | | | |

| | | | | | | | | | | |
|---|---|---|---|---|---|---|---|---|---|---|
| ET | | 9 1 | | | | | | | 224 04 | 658 05 |
| X1 | 990 | 69 | 277 98 | 399 85 | 276 91 | 190 09 | 241 00 | | | |
| GR | 568 4 | 0 00 | 567 42 | 2 26 | 566 13 | 5 21 | 565 38 | 8 30 | 562 57 | 23 03 |
| GR | 559 3 | 38 74 | 559 13 | 39 63 | 558 32 | 58 48 | 558 32 | 65 66 | 558 17 | 77 84 |
| GR | 558 1 | 89 95 | 558 18 | 117 57 | 557 98 | 131 44 | 557 87 | 142 97 | 557 88 | 149 52 |
| GR | 558 1 | 165 05 | 558 27 | 183 05 | 558 61 | 197 21 | 559 61 | 201 28 | 561 18 | 208 45 |
| GR | 565 4 | 222 42 | 565 93 | 224 04 | 565 83 | 234 12 | 564 97 | 235 68 | 561 40 | 242 43 |
| GR | 559 7 | 250 00 | 558 97 | 252 81 | 557 70 | 265 04 | 556 93 | 273 14 | 555 94 | 277 98 |
| GR | 554 7 | 283 91 | 554 27 | 286 51 | 551 99 | 303 80 | 550 60 | 313 88 | 549 77 | 319 89 |
| GR | 549 8 | 320 61 | 549 53 | 337 81 | 549 55 | 339 56 | 549 55 | 346 63 | 550 30 | 350 59 |
| GR | 550 4 | 350 87 | 550 62 | 351 64 | 551 68 | 356 52 | 551 36 | 366 43 | 551 57 | 373 12 |
| GR | 552 1 | 381 50 | 552 40 | 389 07 | 552 99 | 390 97 | 555 56 | 398 64 | 556 25 | 399 85 |
| GR | 559 4 | 405 38 | 561 79 | 409 44 | 562 38 | 419 87 | 562 92 | 434 33 | 563 02 | 444 15 |
| GR | 563 5 | 456 55 | 563 78 | 467 91 | 563 91 | 473 21 | 564 14 | 482 42 | 564 40 | 496 53 |
| GR | 564 8 | 523 97 | 565 26 | 567 82 | 565 57 | 590 20 | 566 30 | 606 83 | 566 46 | 611 21 |
| GR | 567 0 | 631 17 | 568 03 | 646 98 | 568 07 | 647 79 | 570 42 | 658 05 | | |

| | | | | | | | | | | |
|---|---|---|---|---|---|---|---|---|---|---|
| ET | | 9 1 | | | | | | | 234 69 | 731 48 |
| X1 | 1000 | 68 | 312 41 | 436 22 | 69 63 | 257 36 | 243 00 | | | |
| GR | 570 0 | 0 00 | 568 83 | 20 29 | 568 34 | 26 86 | 567 53 | 41 35 | 567 53 | 43 64 |
| GR | 565 2 | 52 18 | 563 48 | 58 61 | 562 73 | 70 71 | 559 50 | 87 92 | 559 21 | 89 98 |
| GR | 558 9 | 104 48 | 558 48 | 115 32 | 558 90 | 130 03 | 559 09 | 138 62 | 559 52 | 144 96 |
| GR | 559 6 | 150 90 | 559 72 | 152 73 | 559 83 | 160 03 | 559 79 | 162 91 | 559 95 | 167 60 |
| GR | 558 9 | 176 94 | 559 40 | 183 98 | 560 43 | 193 43 | 561 20 | 197 84 | 562 01 | 201 90 |
| GR | 563 6 | 208 87 | 565 26 | 220 10 | 565 80 | 222 85 | 565 96 | 234 69 | 564 79 | 240 38 |
| GR | 563 0 | 246 01 | 559 41 | 256 57 | 558 81 | 270 70 | 558 92 | 283 44 | 558 83 | 291 66 |
| GR | 558 5 | 302 39 | 558 28 | 306 33 | 556 00 | 312 41 | 554 61 | 316 10 | 553 93 | 318 40 |
| GR | 551 5 | 325 76 | 551 48 | 326 81 | 551 87 | 356 47 | 551 95 | 373 46 | 551 63 | 393 91 |
| GR | 550 7 | 408 21 | 549 99 | 420 36 | 551 45 | 422 31 | 555 46 | 427 42 | 558 07 | 432 09 |
| GR | 560 2 | 436 22 | 560 36 | 436 50 | 560 36 | 455 69 | 560 26 | 461 84 | 561 32 | 484 29 |
| GR | 563 1 | 493 51 | 565 18 | 507 75 | 565 27 | 513 07 | 565 36 | 523 47 | 565 59 | 537 15 |
| GR | 565 8 | 562 67 | 565 96 | 596 55 | 565 96 | 603 65 | 566 27 | 625 54 | 566 89 | 657 28 |
| GR | 567 1 | 685 08 | 567 12 | 716 64 | 568 00 | 731 48 | | | | |

| | | | | | | | | | | |
|---|---|---|---|---|---|---|---|---|---|---|
| ET | | 9 1 | | | | | | | 318 53 | 795 75 |
| X1 | 1100 | 67 | 362 99 | 428 60 | 510 05 | 315 89 | 379 00 | | | |
| GR | 576 0 | 0 00 | 575 25 | 25 39 | 573 91 | 57 85 | 573 75 | 61 03 | 572 12 | 97 59 |
| GR | 570 7 | 126 54 | 569 22 | 168 88 | 568 96 | 176 72 | 568 83 | 198 97 | 568 75 | 201 64 |
| GR | 568 7 | 214 37 | 568 71 | 228 83 | 567 26 | 244 31 | 567 11 | 245 62 | 565 79 | 248 35 |
| GR | 563 9 | 252 74 | 562 02 | 260 11 | 562 02 | 277 64 | 564 45 | 285 22 | 565 14 | 286 99 |
| GR | 566 7 | 290 79 | 570 00 | 297 73 | 570 28 | 298 35 | 570 42 | 318 53 | 565 24 | 334 92 |
| GR | 565 6 | 341 19 | 564 10 | 358 17 | 563 63 | 362 16 | 562 46 | 362 99 | 556 82 | 367 00 |
| GR | 552 2 | 370 46 | 552 60 | 389 54 | 552 41 | 413 40 | 554 92 | 418 25 | 556 74 | 421 86 |
| GR | 559 4 | 426 83 | 560 05 | 428 24 | 560 21 | 428 60 | 561 80 | 432 10 | 561 87 | 440 74 |
| GR | 561 8 | 449 22 | 561 29 | 459 04 | 561 00 | 470 05 | 561 23 | 483 88 | 561 13 | 494 15 |
| GR | 561 3 | 517 42 | 561 56 | 526 39 | 561 82 | 542 53 | 562 30 | 568 33 | 562 21 | 579 87 |

| | | | | | | | | | | |
|---|---|---|---|---|---|---|---|---|---|---|
| GR | 562 2 | 593 34 | 562 41 | 605 10 | 562 66 | 615 45 | 564 26 | 627 88 | 564 47 | 629 86 |
| GR | 566 3 | 644 78 | 566 54 | 654 03 | 566 90 | 663 54 | 567 27 | 681 07 | 567 37 | 688 23 |
| GR | 568 0 | 710 08 | 568 12 | 714 67 | 568 45 | 740 65 | 568 50 | 768 82 | 568 75 | 780 51 |
| GR | 568 9 | 784 22 | 569 04 | 795 75 | | | | | | |

| | | | | | | | | | | |
|---|---|---|---|---|---|---|---|---|---|---|
| ET | | 9 1 | | | | | | | 346 28 | 760 00 |
| NC | | | | 3 | 5 | | | | | |
| X1 | 1150 | 58 | 408 09 | 488 94 | 170 25 | 275 76 | 223 00 | | | |
| GR | 578 0 | 0 00 | 576 88 | 25 16 | 575 86 | 52 42 | 574 33 | 82 86 | 573 01 | 114 26 |
| GR | 571 7 | 148 80 | 570 66 | 176 75 | 569 45 | 206 74 | 569 12 | 237 63 | 567 99 | 271 34 |
| GR | 565 4 | 277 92 | 565 12 | 278 52 | 564 75 | 279 51 | 562 43 | 286 43 | 562 12 | 305 42 |
| GR | 565 5 | 316 38 | 571 06 | 329 48 | 571 96 | 346 28 | 570 29 | 350 98 | 566 75 | 359 97 |
| GR | 566 5 | 370 46 | 566 21 | 383 20 | 564 65 | 398 40 | 564 27 | 401 53 | 562 14 | 407 17 |
| GR | 561 8 | 408 09 | 557 60 | 417 18 | 557 21 | 420 03 | 555 86 | 430 78 | 555 00 | 441 61 |
| GR | 554 6 | 445 54 | 554 22 | 447 43 | 553 30 | 452 40 | 552 67 | 460 26 | 552 18 | 464 44 |
| GR | 552 6 | 475 74 | 553 38 | 477 26 | 556 29 | 482 36 | 559 87 | 488 94 | 561 68 | 492 27 |
| GR | 562 4 | 493 64 | 562 23 | 514 84 | 562 13 | 545 24 | 562 67 | 571 75 | 562 66 | 574 55 |
| GR | 563 5 | 612 24 | 563 88 | 630 13 | 564 25 | 643 24 | 564 52 | 656 65 | 564 70 | 669 45 |
| GR | 565 0 | 683 97 | 565 53 | 693 80 | 566 00 | 705 08 | 568 00 | 725 00 | 570 00 | 733 00 |
| GR | 574 1 | 737 00 | 570 00 | 746 00 | 569 50 | 760 00 | | | | |

| | | | | | | | | | | |
|---|---|---|---|---|---|---|---|---|---|---|
| X1 | 1175 | 19 | 96 00 | 240 00 | 96 00 | 140 00 | 115 00 | | | |
| GR | 571 1 | 0 00 | 570 00 | 20 00 | 568 00 | 39 00 | 566 00 | 62 50 | 563 45 | 85 00 |
| GR | 561 1 | 96 00 | 558 00 | 110 00 | 555 42 | 143 00 | 553 25 | 172 00 | 554 96 | 202 00 |
| GR | 558 0 | 232 00 | 560 18 | 240 00 | 564 00 | 254 00 | 564 92 | 283 00 | 565 67 | 310 00 |
| GR | 566 3 | 333 00 | 567 00 | 365 00 | 567 90 | 400 00 | 570 00 | 406 00 | | |

| | | | | | | | | | | |
|---|---|---|---|---|---|---|---|---|---|---|
| NC | 0 039 | 0 039 | 0 039 | | | | | | | |
| X1 | 1200 | 23 | 310 00 | 472 00 | 30 00 | 20 00 | 30 00 | | | |
| GR | 574 1 | 0 00 | 573 46 | 19 00 | 572 86 | 40 00 | 572 00 | 71 00 | 571 45 | 96 00 |
| GR | 570 7 | 130 00 | 570 00 | 168 00 | 569 00 | 198 00 | 568 00 | 231 00 | 566 35 | 264 00 |
| GR | 564 0 | 295 50 | 562 50 | 310 00 | 561 00 | 315 00 | 559 41 | 340 50 | 558 00 | 367 00 |
| GR | 557 6 | 403 00 | 559 50 | 429 00 | 561 09 | 472 00 | 561 47 | 482 00 | 564 00 | 498 00 |
| GR | 564 98 | 524 50 | 566 00 | 547 00 | 569 80 | 601 00 | | | | |

| | | | | | | | | | | |
|---|---|---|---|---|---|---|---|---|---|---|
| QT | 1 | 18740 | | | | | | | | |
| NC | 0 018 | 0 018 | 0 018 | | | | | | | |
| X1 | 1225 | 80 | 308 82 | 471 47 | 5 02 | 4 85 | 5 00 | | | |
| GR | 574 0 | 0 00 | 573 35 | 16 25 | 573 34 | 16 54 | 572 49 | 50 26 | 572 05 | 67 85 |
| GR | 571 7 | 85 74 | 571 65 | 87 39 | 571 29 | 105 30 | 570 71 | 134 79 | 570 64 | 137 53 |
| GR | 570 4 | 147 79 | 570 43 | 148 14 | 570 34 | 152 52 | 570 02 | 165 76 | 569 96 | 168 56 |
| GR | 569 3 | 194 96 | 569 24 | 197 58 | 568 21 | 223 77 | 568 06 | 227 39 | 567 42 | 241 55 |
| GR | 567 3 | 244 70 | 566 63 | 258 87 | 565 76 | 271 96 | 565 55 | 275 22 | 564 69 | 288 18 |
| GR | 564 4 | 291 68 | 563 60 | 302 74 | 563 49 | 304 16 | 563 32 | 308 82 | 563 28 | 310 04 |
| GR | 562 9 | 317 29 | 562 65 | 321 54 | 562 26 | 326 93 | 562 14 | 330 04 | 562 12 | 345 41 |
| GR | 562 1 | 347 49 | 562 12 | 352 45 | 562 07 | 364 29 | 562 11 | 376 28 | 562 08 | 387 23 |
| GR | 562 1 | 394 99 | 562 09 | 399 39 | 562 04 | 410 17 | 562 33 | 423 72 | 562 40 | 430 08 |
| GR | 562 5 | 432 71 | 562 98 | 457 01 | 563 02 | 459 67 | 563 20 | 471 47 | 563 24 | 474 06 |
| GR | 563 3 | 475 58 | 563 32 | 477 36 | 563 45 | 486 36 | 563 50 | 490 16 | 563 65 | 498 13 |
| GR | 563 6 | 499 03 | 563 93 | 499 26 | 563 95 | 499 52 | 564 32 | 511 41 | 564 35 | 512 26 |

| | | | | | | | | | | |
|---|---|---|---|---|---|---|---|---|---|---|
| GR | 564 4 | 512 31 | 564 77 | 525 43 | 564 77 | 525 76 | 565 59 | 543 35 | 565 69 | 545 60 |
| GR | 565 7 | 545 69 | 566 00 | 549 86 | 566 90 | 562 04 | 566 94 | 562 63 | 568 03 | 578 24 |
| GR | 568 1 | 578 98 | 569 88 | 595 50 | 569 93 | 595 83 | 571 74 | 611 01 | 571 76 | 611 17 |
| GR | 574 1 | 624 72 | 574 90 | 630 63 | 575 15 | 632 33 | 575 91 | 637 97 | 575 98 | 638 48 |

| | | | | | | | | | | |
|---|---|---|---|---|---|---|---|---|---|---|
| NC | 0 018 | 0 018 | 0 018 | | | | | | | |
| X1 | 1250 | 80 | 305 15 | 467 88 | 19 96 | 18 98 | 20 00 | | | |
| GR | 574 0 | 0 00 | 573 55 | 12 14 | 573 53 | 12 75 | 573 04 | 26 44 | 572 98 | 28 11 |
| GR | 572 0 | 61 53 | 571 92 | 64 98 | 571 86 | 68 38 | 571 58 | 83 39 | 571 58 | 85 76 |
| GR | 571 3 | 101 23 | 571 23 | 104 23 | 570 99 | 121 46 | 570 97 | 123 33 | 570 70 | 141 43 |
| GR | 570 7 | 142 03 | 570 67 | 142 43 | 570 44 | 150 19 | 570 11 | 160 93 | 570 09 | 161 76 |
| GR | 569 5 | 180 41 | 569 03 | 193 85 | 568 96 | 196 29 | 568 47 | 209 64 | 568 34 | 212 77 |
| GR | 567 9 | 226 05 | 567 26 | 237 53 | 567 09 | 240 88 | 565 93 | 263 53 | 565 71 | 266 94 |
| GR | 564 6 | 283 81 | 564 42 | 286 63 | 563 30 | 304 00 | 563 21 | 305 15 | 563 20 | 305 17 |
| GR | 562 8 | 313 12 | 562 57 | 317 14 | 562 17 | 324 65 | 562 16 | 325 91 | 562 12 | 364 96 |
| GR | 562 1 | 365 98 | 562 12 | 367 01 | 562 12 | 367 95 | 562 12 | 405 71 | 562 07 | 409 12 |
| GR | 562 2 | 420 55 | 562 23 | 426 08 | 562 84 | 441 24 | 562 91 | 444 81 | 563 14 | 459 78 |
| GR | 563 2 | 461 40 | 563 35 | 467 88 | 563 41 | 469 93 | 563 59 | 479 93 | 563 61 | 481 37 |
| GR | 563 7 | 484 61 | 563 81 | 493 12 | 564 09 | 500 22 | 565 03 | 523 88 | 566 00 | 542 20 |
| GR | 566 4 | 549 70 | 566 42 | 550 09 | 566 44 | 550 45 | 566 48 | 551 23 | 567 51 | 567 49 |
| GR | 567 6 | 568 70 | 568 66 | 580 15 | 568 86 | 581 78 | 570 12 | 591 01 | 570 33 | 592 40 |
| GR | 571 7 | 600 89 | 571 77 | 601 27 | 572 00 | 602 41 | 573 47 | 609 20 | 573 50 | 609 38 |
| GR | 573 6 | 609 96 | 574 29 | 615 30 | 575 19 | 619 79 | 575 62 | 622 54 | 576 00 | 624 14 |

| | | | | | | | | | | |
|---|---|---|---|---|---|---|---|---|---|---|
| QT | 1 | 19000 | | | | | | | | |
| NC | 0 030 | 0 030 | 0 040 | | | | | | | |
| X1 | 1300 | 80 | 274 32 | 437 11 | 5 77 | 6 47 | 5 00 | | | |
| GR | 574 0 | 0 00 | 573 24 | 20 62 | 572 42 | 33 44 | 572 09 | 35 57 | 572 23 | 42 40 |
| GR | 572 1 | 46 29 | 572 61 | 53 01 | 572 52 | 57 48 | 572 45 | 64 88 | 572 04 | 75 31 |
| GR | 571 8 | 81 71 | 571 88 | 99 14 | 572 03 | 102 77 | 572 07 | 112 42 | 571 56 | 116 95 |
| GR | 571 1 | 120 46 | 570 23 | 125 78 | 570 22 | 127 15 | 570 49 | 132 50 | 570 20 | 137 64 |
| GR | 570 0 | 137 96 | 569 68 | 147 20 | 569 28 | 155 70 | 568 30 | 182 36 | 568 18 | 184 21 |
| GR | 567 7 | 195 84 | 567 16 | 207 45 | 566 88 | 211 08 | 565 83 | 231 41 | 566 18 | 234 08 |
| GR | 566 0 | 236 97 | 565 03 | 251 68 | 563 68 | 271 09 | 563 61 | 274 32 | 563 18 | 282 61 |
| GR | 562 8 | 286 87 | 562 54 | 291 06 | 562 34 | 291 92 | 562 06 | 296 53 | 561 67 | 307 40 |
| GR | 561 6 | 309 86 | 560 23 | 325 36 | 560 02 | 328 36 | 559 68 | 331 20 | 559 68 | 374 07 |
| GR | 559 7 | 374 17 | 561 57 | 378 35 | 561 53 | 380 57 | 561 59 | 392 51 | 561 54 | 395 12 |
| GR | 561 7 | 402 03 | 561 83 | 408 78 | 561 92 | 417 46 | 562 22 | 422 02 | 562 29 | 423 75 |
| GR | 563 3 | 437 11 | 563 68 | 441 48 | 563 80 | 448 74 | 563 96 | 452 29 | 564 07 | 459 15 |
| GR | 564 2 | 463 39 | 564 47 | 464 55 | 564 66 | 469 28 | 564 80 | 475 54 | 564 74 | 479 50 |
| GR | 565 2 | 490 75 | 565 29 | 496 76 | 566 25 | 514 52 | 566 46 | 520 09 | 567 25 | 533 51 |
| GR | 567 4 | 534 98 | 568 15 | 544 10 | 569 51 | 554 83 | 570 91 | 564 09 | 573 18 | 575 29 |
| GR | 574 0 | 581 60 | 574 29 | 583 60 | 575 34 | 588 90 | 575 50 | 589 96 | 575 98 | 591 97 |

| | | | | | | | | | | |
|---|---|---|---|---|---|---|---|---|---|---|
| X1 | 1350 | 69 | 419 89 | 523 87 | 122 29 | 98 86 | 111 00 | | | |
| GR | 580 0 | 0 00 | 578 61 | 10 16 | 578 20 | 13 41 | 576 57 | 30 89 | 576 43 | 32 50 |
| GR | 576 4 | 33 10 | 574 90 | 53 19 | 573 98 | 65 39 | 573 35 | 75 78 | 573 15 | 79 28 |
| GR | 572 1 | 105 03 | 571 96 | 106 95 | 571 12 | 127 19 | 570 89 | 133 06 | 570 88 | 134 40 |
| GR | 570 6 | 159 20 | 570 67 | 171 88 | 570 66 | 179 46 | 570 83 | 181 79 | 570 73 | 186 12 |
| GR | 570 3 | 201 44 | 570 41 | 207 46 | 570 42 | 212 82 | 571 93 | 216 37 | 572 44 | 217 70 |

| | | | | | | | | | | |
|---|---|---|---|---|---|---|---|---|---|---|
| GR | 571 0 | 222 90 | 570 24 | 224 92 | 570 23 | 239 98 | 570 23 | 240 20 | 570 23 | 240 47 |
| GR | 570 1 | 252 22 | 569 96 | 270 40 | 569 94 | 270 84 | 569 49 | 286 10 | 569 07 | 300 28 |
| GR | 569 1 | 300 65 | 568 60 | 329 39 | 568 60 | 329 53 | 568 60 | 331 52 | 568 55 | 353 55 |
| GR | 568 5 | 354 97 | 568 20 | 379 77 | 568 16 | 381 07 | 567 95 | 385 72 | 566 80 | 408 28 |
| GR | 566 3 | 415 85 | 565 98 | 419 89 | 564 83 | 434 41 | 564 17 | 437 16 | 561 53 | 447 99 |
| GR | 561 4 | 449 32 | 559 68 | 462 64 | 559 68 | 487 54 | 559 92 | 488 59 | 561 18 | 493 98 |
| GR | 561 9 | 502 61 | 564 12 | 523 87 | 564 12 | 523 89 | 565 25 | 542 51 | 565 87 | 551 99 |
| GR | 566 0 | 566 78 | 566 18 | 572 75 | 567 56 | 588 48 | 567 85 | 596 57 | 567 99 | 597 09 |
| GR | 572 9 | 609 77 | 573 03 | 610 22 | 573 20 | 610 64 | 578 16 | 624 36 | | |

| | | | | | | | | | | |
|---|---|---|---|---|---|---|---|---|---|---|
| NC | | | | 1 | 3 | | | | | |
| X1 | 1400 | 65 | 314 34 | 380 04 | 99 38 | 202 99 | 149 00 | | | |
| GR | 579 9 | 0 00 | 578 61 | 8 93 | 578 13 | 13 25 | 577 90 | 14 75 | 577 78 | 15 64 |
| GR | 576 0 | 33 22 | 575 74 | 35 58 | 575 49 | 38 27 | 575 31 | 40 97 | 574 02 | 52 59 |
| GR | 573 8 | 55 73 | 572 70 | 74 16 | 572 59 | 75 83 | 572 52 | 77 07 | 572 17 | 81 90 |
| GR | 571 9 | 87 48 | 571 43 | 96 96 | 572 66 | 107 17 | 572 79 | 108 38 | 572 67 | 108 88 |
| GR | 570 6 | 117 57 | 570 35 | 125 74 | 570 07 | 131 79 | 570 45 | 133 83 | 571 10 | 138 58 |
| GR | 570 7 | 147 93 | 570 72 | 149 02 | 570 65 | 150 64 | 570 03 | 166 43 | 570 00 | 167 25 |
| GR | 569 8 | 173 17 | 569 75 | 180 65 | 569 28 | 203 24 | 569 17 | 208 57 | 568 65 | 234 27 |
| GR | 568 6 | 237 62 | 568 76 | 258 50 | 568 78 | 263 05 | 568 70 | 288 47 | 568 70 | 290 44 |
| GR | 568 6 | 294 27 | 568 32 | 308 02 | 568 08 | 313 10 | 568 02 | 313 96 | 568 00 | 314 34 |
| GR | 567 6 | 320 44 | 561 36 | 333 95 | 559 72 | 337 34 | 559 55 | 352 99 | 559 40 | 367 19 |
| GR | 561 4 | 371 18 | 565 84 | 380 04 | 567 09 | 382 53 | 567 46 | 392 05 | 568 22 | 411 33 |
| GR | 569 2 | 422 38 | 570 02 | 430 92 | 570 17 | 432 44 | 570 40 | 435 13 | 571 72 | 438 24 |
| GR | 576 1 | 451 89 | 576 75 | 453 97 | 578 99 | 460 64 | 579 54 | 461 86 | 580 20 | 463 50 |

| | | | | | | | | | | |
|---|---|---|---|---|---|---|---|---|---|---|
| X1 | 1500 | 32 | 29 32 | 106 79 | 254 80 | 213 94 | 263 00 | | | |
| GR | 590 0 | 0 00 | 587 54 | 3 24 | 582 16 | 11 28 | 579 17 | 15 86 | 573 64 | 24 11 |
| GR | 570 2 | 29 32 | 567 80 | 32 84 | 567 26 | 33 78 | 566 47 | 34 94 | 559 83 | 45 07 |
| GR | 559 7 | 68 59 | 559 66 | 77 85 | 561 86 | 86 58 | 565 74 | 102 69 | 566 04 | 106 79 |
| GR | 566 2 | 109 35 | 567 09 | 121 15 | 569 97 | 141 24 | 570 56 | 145 38 | 571 41 | 151 16 |
| GR | 571 0 | 161 16 | 570 78 | 168 91 | 570 87 | 180 75 | 571 46 | 191 56 | 571 88 | 200 41 |
| GR | 580 0 | 210 99 | 580 77 | 212 00 | 581 87 | 214 68 | 584 20 | 220 33 | 584 45 | 222 30 |
| GR | 585 4 | 232 09 | 589 95 | 239 53 | | | | | | |

| | | | | | | | | | | |
|---|---|---|---|---|---|---|---|---|---|---|
| X1 | 1600 | 43 | 32 10 | 99 18 | 142 73 | 176 27 | 151 00 | | | |
| GR | 588 0 | 0 00 | 588 39 | 1 80 | 588 75 | 3 26 | 588 22 | 5 58 | 587 74 | 8 01 |
| GR | 584 1 | 13 23 | 582 23 | 16 60 | 578 96 | 22 42 | 575 60 | 28 84 | 574 40 | 32 10 |
| GR | 571 5 | 39 91 | 569 56 | 44 38 | 567 86 | 49 63 | 564 88 | 59 62 | 564 41 | 61 09 |
| GR | 564 4 | 62 20 | 564 06 | 75 46 | 565 28 | 81 09 | 565 97 | 83 80 | 568 35 | 92 91 |
| GR | 570 4 | 99 18 | 571 87 | 103 69 | 573 20 | 107 72 | 572 44 | 113 15 | 572 39 | 113 74 |
| GR | 572 3 | 114 54 | 571 79 | 120 74 | 571 58 | 123 51 | 571 11 | 130 68 | 570 91 | 141 98 |
| GR | 571 2 | 147 57 | 571 73 | 154 20 | 571 91 | 156 97 | 578 16 | 169 49 | 580 20 | 173 71 |
| GR | 580 4 | 174 13 | 580 76 | 174 58 | 583 93 | 180 17 | 587 86 | 186 91 | 588 41 | 199 71 |
| GR | 588 5 | 202 80 | 588 79 | 206 49 | 590 00 | 208 93 | | | | |

| | | | | | | | | | | |
|---|---|---|---|---|---|---|---|---|---|---|
| X1 | 1700 | 39 | 18 94 | 101 75 | 173 26 | 152 55 | 177 00 | | | |
| GR | 590 4 | 0 00 | 587 51 | 4 02 | 586 54 | 5 22 | 585 64 | 6 25 | 578 75 | 13 97 |
| GR | 576 4 | 17 41 | 575 09 | 18 94 | 572 67 | 21 84 | 570 79 | 24 55 | 569 63 | 26 80 |
| GR | 564 9 | 32 55 | 564 40 | 33 27 | 564 40 | 33 81 | 564 39 | 53 71 | 565 51 | 60 57 |
| GR | 567 2 | 73 02 | 568 16 | 81 56 | 569 52 | 95 87 | 570 00 | 101 68 | 570 00 | 101 75 |
| GR | 570 6 | 110 35 | 571 65 | 124 79 | 571 92 | 139 90 | 572 04 | 152 00 | 572 20 | 158 83 |
| GR | 573 3 | 166 23 | 573 62 | 168 06 | 573 73 | 169 17 | 574 23 | 173 44 | 576 45 | 176 68 |
| GR | 581 7 | 184 38 | 584 63 | 188 51 | 587 69 | 193 16 | 588 28 | 202 61 | 588 45 | 205 76 |
| GR | 588 5 | 206 73 | 588 59 | 207 31 | 588 68 | 209 38 | 590 03 | 225 80 | | |

| | | | |
|---|---|---|---|
| NC | 0 060 | 0 030 | 0 045 |

| | | | | | | | | | | |
|---|---|---|---|---|---|---|---|---|---|---|
| X1 | 1800 | 36 | 72 78 | 211 85 | 446 95 | 216 87 | 313 00 | | | |
| GR | 600 1 | 0 00 | 598 66 | 5 74 | 595 90 | 15 87 | 590 97 | 33 18 | 590 29 | 35 46 |
| GR | 590 0 | 36 54 | 584 35 | 54 60 | 582 44 | 59 71 | 578 02 | 72 78 | 577 65 | 73 87 |
| GR | 577 3 | 74 88 | 577 18 | 75 78 | 576 70 | 79 67 | 574 40 | 97 82 | 574 19 | 99 68 |
| GR | 571 3 | 110 83 | 570 97 | 112 08 | 569 99 | 124 32 | 569 54 | 129 56 | 569 39 | 131 52 |
| GR | 569 2 | 138 75 | 569 32 | 169 87 | 568 58 | 175 15 | 568 58 | 188 10 | 568 58 | 194 01 |
| GR | 573 0 | 208 01 | 574 00 | 211 37 | 574 14 | 211 85 | 574 43 | 212 88 | 574 43 | 215 32 |
| GR | 574 9 | 219 63 | 575 76 | 233 05 | 579 09 | 242 32 | 580 18 | 245 53 | 580 40 | 249 24 |
| GR | 589 9 | 269 53 | | | | | | | | |

| | | | | | | | | | | |
|---|---|---|---|---|---|---|---|---|---|---|
| X1 | 1900 | 34 | 107 49 | 271 33 | 214 30 | 245 02 | 236 00 | | | |
| GR | 600 0 | 0 00 | 599 52 | 2 86 | 593 92 | 29 89 | 593 52 | 31 51 | 593 25 | 32 57 |
| GR | 590 5 | 43 44 | 589 65 | 46 98 | 586 28 | 60 02 | 585 66 | 61 96 | 585 57 | 65 11 |
| GR | 585 4 | 71 91 | 584 63 | 75 50 | 584 40 | 78 88 | 584 06 | 81 65 | 581 79 | 90 51 |
| GR | 581 5 | 93 01 | 579 54 | 100 63 | 578 58 | 107 49 | 577 56 | 114 74 | 576 47 | 125 37 |
| GR | 575 8 | 133 34 | 573 22 | 163 13 | 572 24 | 183 17 | 572 00 | 188 66 | 571 13 | 210 93 |
| GR | 571 0 | 215 54 | 570 86 | 226 64 | 570 82 | 231 23 | 573 56 | 246 56 | 575 51 | 256 70 |
| GR | 578 8 | 267 41 | 579 93 | 271 33 | 580 36 | 272 82 | 589 73 | 287 67 | | |

| | | | | | | | | | | |
|---|---|---|---|---|---|---|---|---|---|---|
| X1 | 2000 | 25 | 58 79 | 166 42 | 196 19 | 259 41 | 244 00 | | | |
| GR | 600 0 | 0 00 | 599 70 | 1 09 | 598 74 | 3 73 | 589 16 | 25 94 | 588 58 | 27 69 |
| GR | 588 3 | 30 94 | 588 32 | 41 10 | 585 72 | 48 48 | 583 21 | 55 99 | 582 61 | 58 79 |
| GR | 580 5 | 68 50 | 579 90 | 71 94 | 576 21 | 87 91 | 572 14 | 112 16 | 571 97 | 113 31 |
| GR | 571 6 | 115 98 | 571 63 | 120 65 | 571 71 | 141 04 | 575 56 | 152 93 | 579 28 | 163 39 |
| GR | 580 1 | 166 42 | 580 64 | 168 17 | 583 31 | 175 99 | 587 82 | 182 25 | 598 57 | 198 57 |

| | | | |
|---|---|---|---|
| NC | 0 060 | 0 040 | 0 045 |

| | | | | | | | | | | |
|---|---|---|---|---|---|---|---|---|---|---|
| X1 | 2100 | 30 | 69 15 | 173 17 | 192 76 | 210 52 | 204 00 | | | |
| GR | 610 0 | 0 00 | 606 06 | 8 38 | 601 14 | 20 83 | 596 17 | 30 08 | 591 51 | 38 45 |
| GR | 589 9 | 43 27 | 586 46 | 54 33 | 586 32 | 64 19 | 586 29 | 67 99 | 585 86 | 69 15 |
| GR | 585 3 | 70 61 | 580 13 | 88 95 | 579 06 | 99 40 | 576 89 | 115 93 | 575 73 | 127 74 |
| GR | 574 6 | 137 68 | 574 54 | 144 10 | 574 39 | 150 92 | 577 44 | 157 91 | 580 43 | 165 10 |
| GR | 583 7 | 173 17 | 583 99 | 173 81 | 588 08 | 181 50 | 589 08 | 185 67 | 589 08 | 185 72 |
| GR | 593 3 | 195 23 | 593 62 | 195 75 | 594 19 | 196 61 | 595 17 | 198 21 | 599 99 | 205 84 |

| | | | | | | | | | | | |
|---|---|---|---|---|---|---|---|---|---|---|---|
| NH | 5 | 03 | 38 17 | 02 | 48 94 | 045 | 186 79 | 02 | 203 49 | 03 | |
| NH | 215 3 | | | | | | | | | | |
| X1 | 2200 | 32 | 59 41 | 145 70 | 244 93 | 261 26 | 245 00 | | | | |
| GR | 610 0 | 0 00 | 605 17 | 13 26 | 601 81 | 20 98 | 593 06 | 36 64 | 592 36 | 38 17 | |
| GR | 592 2 | 41 85 | 591 90 | 48 94 | 592 09 | 53 44 | 591 98 | 54 85 | 590 84 | 57 02 | |
| GR | 589 8 | 59 41 | 583 96 | 72 25 | 580 01 | 93 54 | 578 80 | 100 31 | 578 19 | 107 56 | |
| GR | 577 7 | 117 18 | 579 03 | 124 50 | 582 36 | 133 22 | 583 64 | 135 26 | 586 82 | 139 71 | |
| GR | 589 8 | 145 70 | 590 50 | 146 98 | 591 66 | 149 44 | 592 60 | 151 90 | 598 11 | 166 30 | |
| GR | 598 3 | 173 78 | 598 23 | 186 79 | 598 30 | 188 46 | 598 94 | 203 49 | 599 07 | 204 70 | |
| GR | 599 2 | 205 96 | 599 98 | 215 30 | | | | | | | |

| | | | | | | | | | | | |
|---|---|---|---|---|---|---|---|---|---|---|---|
| NH | 5 | 03 | 21 45 | 02 | 32 68 | 045 | 144 01 | 02 | 244 78 | 03 | |
| NH | 255 6 | | | | | | | | | | |
| X1 | 2300 | 38 | 48 61 | 115 32 | 219 25 | 163 91 | 215 00 | | | | |
| GR | 610 1 | 0 00 | 608 18 | 3 80 | 607 58 | 4 88 | 604 13 | 9 71 | 595 85 | 21 45 | |
| GR | 595 5 | 32 60 | 595 49 | 32 64 | 595 48 | 32 68 | 594 38 | 42 60 | 592 12 | 45 53 | |
| GR | 589 9 | 48 61 | 587 27 | 52 16 | 583 52 | 75 42 | 583 21 | 77 39 | 583 21 | 77 61 | |
| GR | 584 0 | 93 88 | 584 61 | 96 33 | 587 73 | 107 98 | 589 93 | 115 32 | 591 04 | 119 04 | |
| GR | 595 7 | 130 09 | 599 84 | 140 20 | 600 05 | 144 01 | 600 91 | 163 78 | 601 36 | 187 95 | |
| GR | 601 5 | 196 06 | 601 49 | 198 68 | 601 55 | 208 67 | 601 60 | 209 98 | 602 03 | 219 89 | |
| GR | 602 1 | 229 19 | 602 22 | 236 57 | 602 75 | 244 78 | 602 82 | 245 99 | 604 84 | 248 55 | |
| GR | 607 5 | 252 00 | 608 27 | 253 32 | 610 05 | 255 60 | | | | | |

| | | | | | | | | | | | |
|---|---|---|---|---|---|---|---|---|---|---|---|
| NH | 5 | 03 | 19 69 | 02 | 147 06 | 045 | 249 75 | 02 | 414 13 | 03 | |
| NH | 440 5 | | | | | | | | | | |
| X1 | 2400 | 60 | 190 60 | 243 98 | 392 50 | 130 98 | 266 00 | | | | |
| GR | 620 0 | 0 00 | 608 63 | 19 69 | 607 06 | 22 48 | 607 16 | 34 06 | 607 23 | 42 10 | |
| GR | 607 1 | 48 94 | 606 81 | 59 22 | 606 14 | 59 65 | 602 34 | 63 42 | 602 32 | 69 02 | |
| GR | 602 2 | 88 53 | 601 41 | 119 00 | 601 33 | 121 86 | 601 28 | 123 25 | 601 10 | 125 39 | |
| GR | 600 0 | 142 73 | 600 46 | 147 06 | 600 48 | 147 75 | 596 95 | 155 90 | 596 18 | 157 65 | |
| GR | 595 9 | 158 11 | 595 93 | 162 18 | 595 75 | 187 56 | 594 20 | 190 60 | 591 32 | 196 27 | |
| GR | 589 0 | 200 74 | 588 67 | 201 76 | 584 75 | 212 85 | 584 82 | 220 31 | 584 84 | 222 99 | |
| GR | 586 4 | 223 92 | 588 19 | 228 12 | 589 90 | 231 98 | 591 94 | 239 00 | 595 90 | 243 98 | |
| GR | 598 4 | 247 12 | 599 75 | 249 75 | 599 99 | 251 95 | 601 78 | 268 31 | 603 24 | 298 53 | |
| GR | 603 4 | 301 38 | 603 71 | 315 44 | 603 91 | 324 33 | 603 81 | 333 05 | 603 60 | 345 88 | |
| GR | 604 2 | 353 79 | 604 98 | 376 30 | 604 87 | 380 25 | 604 96 | 391 50 | 605 20 | 404 91 | |
| GR | 605 3 | 414 13 | 609 80 | 414 15 | 610 14 | 414 39 | 610 37 | 420 05 | 611 59 | 425 35 | |
| GR | 613 5 | 428 13 | 615 50 | 431 81 | 616 33 | 433 44 | 618 61 | 437 79 | 620 01 | 440 50 | |

| | | | | | | | | | | | |
|---|---|---|---|---|---|---|---|---|---|---|---|
| NH | 5 | 03 | 18 26 | 02 | 111 04 | 045 | 284 22 | 02 | 357 89 | 03 | |
| NH | 379 7 | | | | | | | | | | |
| X1 | 2500 | 69 | 135 97 | 218 33 | 141 68 | 125 80 | 150 00 | | | | |
| GR | 619 8 | 0 00 | 619 73 | 0 24 | 613 58 | 13 49 | 609 64 | 18 26 | 606 58 | 22 13 | |
| GR | 606 4 | 24 20 | 606 09 | 26 50 | 606 23 | 31 43 | 606 54 | 41 98 | 606 58 | 50 40 | |
| GR | 606 5 | 57 71 | 602 25 | 59 81 | 602 02 | 59 95 | 602 03 | 60 52 | 602 00 | 66 20 | |
| GR | 601 9 | 73 69 | 601 77 | 74 64 | 601 62 | 76 68 | 600 53 | 90 48 | 600 20 | 96 93 | |
| GR | 601 4 | 99 11 | 602 15 | 102 13 | 602 69 | 103 77 | 601 01 | 108 44 | 600 06 | 111 04 | |
| GR | 599 7 | 111 84 | 597 40 | 118 00 | 596 02 | 121 45 | 595 72 | 126 51 | 595 51 | 134 33 | |
| GR | 594 8 | 135 97 | 593 21 | 139 33 | 589 08 | 148 77 | 588 26 | 153 38 | 587 05 | 156 90 | |
| GR | 585 4 | 160 64 | 585 25 | 162 26 | 585 17 | 165 07 | 584 92 | 172 18 | 585 46 | 177 29 | |

| | | | | | | | | | | |
|---|---|---|---|---|---|---|---|---|---|---|
| GR | 588 5 | 193 06 | 589 18 | 195 62 | 594 38 | 215 25 | 595 74 | 218 33 | 597 75 | 222 89 |
| GR | 604 3 | 237 47 | 603 87 | 251 58 | 603 59 | 261 11 | 603 58 | 265 45 | 603 58 | 274 60 |
| GR | 604 3 | 284 22 | 604 36 | 284 90 | 604 38 | 286 76 | 604 49 | 304 68 | 604 72 | 325 38 |
| GR | 604 7 | 325 86 | 604 72 | 326 07 | 605 04 | 327 53 | 605 01 | 329 72 | 604 45 | 345 79 |
| GR | 604 3 | 355 28 | 604 91 | 357 89 | 605 83 | 362 68 | 607 55 | 364 61 | 608 86 | 366 65 |
| GR | 610 4 | 368 07 | 615 85 | 373 35 | 616 81 | 374 50 | 619 63 | 379 70 | | |

| | | | | | | | | | | |
|---|---|---|---|---|---|---|---|---|---|---|
| NH | 7 | 03 | 25 20 | 02 | 119 49 | 045 | 215 87 | 02 | 270 00 | 03 |
| NH | 354 2 | 018 | 380 41 | 03 | 389 21 | | | | | |
| ET | | 9 1 | | | | | | | | 336 00 |
| X1 | 2600 | 63 | 131 68 | 203 64 | 163 37 | 159 36 | 163 00 | | | |
| GR | 620 1 | 0 00 | 613 25 | 18 44 | 612 66 | 20 07 | 610 62 | 23 87 | 610 15 | 24 74 |
| GR | 609 9 | 25 20 | 605 57 | 29 85 | 602 44 | 36 07 | 601 85 | 42 38 | 600 70 | 46 07 |
| GR | 600 3 | 57 86 | 600 25 | 58 12 | 600 18 | 58 45 | 600 08 | 59 16 | 598 35 | 69 72 |
| GR | 598 3 | 73 95 | 598 28 | 73 98 | 597 04 | 100 12 | 596 79 | 105 92 | 596 79 | 106 35 |
| GR | 597 4 | 115 41 | 597 73 | 119 49 | 598 26 | 125 91 | 596 21 | 131 68 | 594 02 | 137 86 |
| GR | 591 4 | 144 91 | 590 00 | 149 03 | 585 37 | 163 29 | 585 37 | 171 17 | 585 37 | 181 35 |
| GR | 589 1 | 188 03 | 590 32 | 190 68 | 594 31 | 201 25 | 594 38 | 201 40 | 595 36 | 202 89 |
| GR | 595 9 | 203 64 | 603 95 | 215 87 | 603 98 | 217 93 | 604 12 | 227 36 | 604 14 | 232 05 |
| GR | 604 3 | 241 35 | 604 51 | 250 42 | 604 72 | 260 97 | 604 78 | 263 94 | 604 82 | 270 00 |
| GR | 615 0 | 0 270 00 | 615 00 | 336 00 | 605 38 | 336 00 | 610 70 | 344 49 | 611 00 | 345 27 |
| GR | 612 4 | 347 91 | 615 83 | 354 20 | 615 97 | 356 16 | 616 30 | 359 30 | 616 50 | 367 74 |
| GR | 616 6 | 370 34 | 616 35 | 380 41 | 616 34 | 380 93 | 616 30 | 381 04 | 616 20 | 384 02 |
| GR | 617 6 | 385 83 | 619 17 | 387 48 | 619 99 | 389 21 | | | | |

| | | | | | | | | | | |
|---|---|---|---|---|---|---|---|---|---|---|
| NH | 7 | 03 | 42 83 | 02 | 167 97 | 045 | 255 81 | 02 | 322 00 | 03 |
| NH | 377 9 | 018 | 399 95 | 03 | 429 87 | | | | | |
| ET | | 9 1 | | | | | | | | 322 00 |
| X1 | 2700 | 63 | 189 01 | 255 81 | 133 14 | 128 43 | 128 00 | | | |
| GR | 619 7 | 0 00 | 618 10 | 2 58 | 613 19 | 11 60 | 612 95 | 12 05 | 612 35 | 23 77 |
| GR | 612 3 | 25 00 | 608 12 | 33 34 | 605 79 | 37 42 | 601 14 | 42 83 | 598 07 | 47 60 |
| GR | 597 9 | 53 52 | 597 85 | 59 00 | 607 00 | 59 00 | 607 00 | 141 07 | 596 71 | 141 07 |
| GR | 596 2 | 160 44 | 596 00 | 167 97 | 597 19 | 173 37 | 597 53 | 175 53 | 599 03 | 182 16 |
| GR | 599 1 | 182 59 | 598 50 | 184 32 | 596 57 | 189 01 | 591 58 | 201 27 | 586 08 | 215 94 |
| GR | 585 4 | 217 78 | 585 40 | 222 29 | 585 44 | 226 94 | 585 49 | 228 51 | 586 10 | 240 06 |
| GR | 590 8 | 251 90 | 592 60 | 255 81 | 593 18 | 257 04 | 597 08 | 260 92 | 602 97 | 266 03 |
| GR | 604 1 | 283 73 | 604 70 | 293 32 | 604 78 | 305 00 | 614 00 | 305 00 | 614 00 | 322 00 |
| GR | 614 0 | 355 00 | 604 90 | 355 00 | 604 88 | 359 91 | 604 90 | 360 84 | 605 00 | 361 42 |
| GR | 607 3 | 368 61 | 608 60 | 373 39 | 609 59 | 377 90 | 609 70 | 380 40 | 609 70 | 381 35 |
| GR | 609 9 | 388 36 | 610 00 | 392 37 | 609 87 | 399 95 | 609 80 | 402 92 | 609 80 | 404 42 |
| GR | 609 8 | 406 84 | 610 90 | 408 07 | 612 99 | 411 02 | 613 90 | 411 83 | 615 70 | 413 66 |
| GR | 616 8 | 419 53 | 617 30 | 423 59 | 620 17 | 429 87 | | | | |

| | | | | | | | | | | |
|---|---|---|---|---|---|---|---|---|---|---|
| NH | 5 | 03 | 28 61 | 02 | 220 53 | 045 | 297 53 | 018 | 419 62 | 03 |
| NH | 445 2 | | | | | | | | | |
| X1 | 2800 | 57 | 224 43 | 287 27 | 105 29 | 189 76 | 187 00 | | | |
| GR | 619 8 | 0 00 | 616 11 | 9 36 | 611 92 | 15 55 | 608 39 | 20 10 | 600 23 | 26 55 |
| GR | 597 9 | 28 61 | 597 84 | 33 16 | 610 00 | 55 00 | 610 00 | 66 96 | 610 00 | 104 00 |
| GR | 610 0 | 104 0 | 610 00 | 113 00 | 597 29 | 113 00 | 597 10 | 142 39 | 597 05 | 154 74 |
| GR | 597 0 | 174 30 | 596 49 | 198 45 | 596 23 | 208 30 | 596 20 | 208 83 | 596 23 | 209 44 |
| GR | 596 7 | 212 10 | 598 10 | 220 53 | 598 68 | 224 43 | 599 00 | 226 47 | 596 85 | 231 10 |

| | | | | | | | | | | |
|---|---|---|---|---|---|---|---|---|---|---|
| GR | 590 8 | 241 56 | 585 31 | 252 58 | 584 95 | 253 32 | 585 00 | 254 13 | 585 50 | 274 49 |
| GR | 591 7 | 282 28 | 593 91 | 285 19 | 595 43 | 287 27 | 597 60 | 290 30 | 602 68 | 297 53 |
| GR | 602 4 | 300 24 | 602 62 | 310 66 | 602 34 | 326 89 | 602 90 | 347 29 | 603 17 | 354 95 |
| GR | 603 9 | 371 24 | 604 38 | 384 48 | 604 59 | 386 34 | 606 00 | 401 51 | 606 88 | 409 16 |
| GR | 606 7 | 413 70 | 606 42 | 419 62 | 606 37 | 421 18 | 606 30 | 424 04 | 606 22 | 428 87 |
| GR | 606 6 | 429 82 | 606 76 | 430 10 | 606 82 | 430 14 | 606 50 | 431 00 | 606 41 | 431 06 |
| GR | 610 0 | 436 24 | 616 04 | 445 20 | | | | | | |

| | | | | | | | | | | |
|---|---|---|---|---|---|---|---|---|---|---|
| NH | 7 | 03 | 19 50 | 02 | 221 21 | 045 | 380 59 | 02 | 402 10 | 03 |
| NH | 427 20 | 018 | 447 52 | 03 | 456 92 | | | | | |
| X1 | 2830 | 65 | 229 02 | 341 92 | 26 81 | 130 09 | 100 00 | | | |
| GR | 620 0 | 0 00 | 605 00 | 19 50 | 597 85 | 49 00 | 610 80 | 66 00 | 610 80 | 87 00 |
| GR | 610 7 | 87 00 | 610 40 | 127 00 | 597 40 | 127 00 | 597 08 | 151 98 | 596 95 | 178 70 |
| GR | 596 9 | 182 53 | 596 90 | 185 32 | 596 33 | 207 61 | 596 17 | 215 66 | 597 51 | 221 21 |
| GR | 597 5 | 221 42 | 598 00 | 223 59 | 598 33 | 228 02 | 598 43 | 229 02 | 598 78 | 233 02 |
| GR | 599 3 | 239 83 | 599 20 | 239 87 | 596 24 | 248 34 | 595 62 | 251 43 | 593 21 | 261 55 |
| GR | 591 5 | 268 06 | 590 60 | 273 13 | 589 74 | 276 45 | 587 95 | 283 75 | 587 10 | 286 91 |
| GR | 586 4 | 287 54 | 584 90 | 289 93 | 584 95 | 297 19 | 584 95 | 298 30 | 584 95 | 299 36 |
| GR | 585 0 | 300 35 | 585 10 | 305 17 | 585 12 | 308 53 | 585 27 | 310 32 | 585 24 | 311 05 |
| GR | 586 8 | 313 88 | 588 90 | 320 26 | 591 94 | 326 36 | 592 58 | 329 38 | 594 15 | 336 09 |
| GR | 596 1 | 341 92 | 600 70 | 356 07 | 600 74 | 356 31 | 600 75 | 356 50 | 602 13 | 380 59 |
| GR | 602 3 | 383 83 | 603 10 | 402 10 | 603 19 | 404 29 | 603 21 | 404 77 | 603 64 | 406 49 |
| GR | 607 5 | 422 24 | 607 90 | 427 20 | 607 90 | 427 47 | 607 90 | 427 70 | 608 05 | 438 91 |
| GR | 607 9 | 447 52 | 607 90 | 449 80 | 608 03 | 450 86 | 608 40 | 455 07 | 609 46 | 456 92 |

| | | | | | | | | | | |
|---|---|---|---|---|---|---|---|---|---|---|
| NH | 6 | 03 | 23 80 | 02 | 220 85 | 045 | 385 14 | 02 | 413 21 | 03 |
| NH | 437 28 | 018 | 459 38 | | | | | | | |
| X1 | 2860 | 62 | 221 28 | 335 67 | 23 80 | 29 22 | 17 00 | | | |
| GR | 620 0 | 0 00 | 615 00 | 9 50 | 600 00 | 23 80 | 597 85 | 48 50 | 597 65 | 80 00 |
| GR | 610 0 | 80 00 | 610 00 | 143 00 | 597 28 | 143 00 | 597 13 | 155 56 | 596 99 | 160 86 |
| GR | 596 9 | 177 45 | 596 70 | 199 32 | 596 66 | 199 87 | 596 65 | 200 27 | 596 58 | 203 03 |
| GR | 596 4 | 210 82 | 596 00 | 220 85 | 595 98 | 221 28 | 595 95 | 223 40 | 595 84 | 229 38 |
| GR | 595 2 | 235 29 | 594 70 | 242 40 | 594 62 | 242 92 | 594 12 | 246 53 | 592 56 | 252 05 |
| GR | 592 0 | 256 40 | 590 60 | 264 36 | 589 20 | 270 14 | 588 28 | 275 51 | 588 32 | 282 57 |
| GR | 588 3 | 287 19 | 588 10 | 291 73 | 588 06 | 293 20 | 587 91 | 297 60 | 587 86 | 304 51 |
| GR | 587 9 | 306 76 | 587 80 | 309 48 | 588 08 | 310 37 | 588 06 | 313 04 | 590 19 | 316 45 |
| GR | 591 8 | 320 17 | 594 00 | 328 79 | 594 40 | 330 56 | 594 74 | 331 62 | 595 98 | 335 67 |
| GR | 601 1 | 352 53 | 601 70 | 373 99 | 601 92 | 385 14 | 602 47 | 398 31 | 602 99 | 413 21 |
| GR | 605 7 | 422 84 | 607 80 | 429 46 | 607 94 | 433 04 | 608 08 | 435 85 | 608 11 | 437 28 |
| GR | 608 3 | 446 64 | 608 30 | 447 60 | 608 34 | 447 74 | 608 35 | 452 48 | 608 37 | 458 84 |
| GR | 608 4 | 458 97 | 608 40 | 459 38 | | | | | | |

| | | | | | | | | | | |
|---|---|---|---|---|---|---|---|---|---|---|
| NH | 6 | 03 | 72 95 | 02 | 146 74 | 045 | 290 48 | 02 | 451 71 | 018 |
| NH | 473 4 | 03 | 488 59 | | | | | | | |
| X1 | 2890 | 64 | 177 48 | 290 48 | 135 02 | 192 23 | 149 00 | | | |
| GR | 620 0 | 0 00 | 611 00 | 25 31 | 611 09 | 30 42 | 611 03 | 36 05 | 610 95 | 39 56 |
| GR | 610 9 | 44 55 | 611 05 | 49 52 | 611 09 | 50 76 | 607 20 | 56 04 | 600 64 | 66 62 |
| GR | 600 0 | 72 95 | 599 69 | 77 94 | 598 42 | 96 09 | 598 40 | 102 95 | 598 63 | 111 78 |
| GR | 599 2 | 125 30 | 600 00 | 146 74 | 600 21 | 156 78 | 597 30 | 169 49 | 595 81 | 177 48 |
| GR | 594 6 | 184 08 | 589 57 | 200 93 | 588 46 | 204 74 | 588 90 | 216 32 | 589 07 | 220 60 |
| GR | 588 9 | 244 21 | 588 89 | 244 27 | 588 89 | 244 39 | 588 90 | 244 64 | 589 43 | 265 84 |

| | | | | | | | | | | |
|---|---|---|---|---|---|---|---|---|---|---|
| GR | 591 0 | 270 27 | 593 93 | 279 22 | 595 84 | 290 48 | 596 90 | 297 00 | 597 40 | 299 71 |
| GR | 597 4 | 300 67 | 599 70 | 341 22 | 600 42 | 349 97 | 600 70 | 352 09 | 603 14 | 362 61 |
| GR | 603 8 | 365 67 | 603 98 | 366 41 | 604 75 | 381 42 | 605 00 | 383 38 | 605 38 | 388 51 |
| GR | 606 4 | 391 30 | 606 80 | 394 98 | 607 04 | 397 30 | 607 80 | 403 84 | 608 08 | 405 33 |
| GR | 609 3 | 412 19 | 609 43 | 413 81 | 610 70 | 419 25 | 610 80 | 421 09 | 612 60 | 441 23 |
| GR | 613 1 | 445 77 | 613 42 | 451 71 | 614 05 | 462 87 | 614 10 | 463 00 | 614 06 | 463 11 |
| GR | 613 7 | 473 40 | 614 07 | 475 39 | 614 20 | 476 42 | 621 10 | 488 59 | | |

| | | | | | | | | | | |
|---|---|---|---|---|---|---|---|---|---|---|
| NH | 7 | 03 | 74 54 | 02 | 143 43 | 045 | 269 08 | 02 | 378 58 | 03 |
| NH | 438 0 | 018 | 459 38 | 03 | 469 93 | | | | | |
| X1 | 2900 | 59 | 154 05 | 269 08 | 52 77 | 43 43 | 35 00 | | | |
| GR | 619 7 | 0 00 | 610 56 | 32 17 | 610 62 | 43 81 | 610 57 | 46 70 | 610 27 | 57 88 |
| GR | 602 2 | 74 54 | 600 74 | 77 94 | 600 81 | 94 69 | 600 80 | 97 37 | 600 82 | 97 78 |
| GR | 600 8 | 98 35 | 600 84 | 111 71 | 600 38 | 143 43 | 600 38 | 143 58 | 596 44 | 154 05 |
| GR | 595 2 | 157 33 | 593 69 | 160 88 | 593 06 | 162 97 | 589 98 | 174 53 | 588 50 | 180 02 |
| GR | 589 0 | 196 05 | 589 15 | 200 20 | 589 13 | 201 88 | 589 21 | 221 10 | 589 27 | 224 61 |
| GR | 589 4 | 238 16 | 589 45 | 240 38 | 589 69 | 241 11 | 593 77 | 253 08 | 594 46 | 258 23 |
| GR | 596 0 | 269 08 | 596 83 | 274 43 | 597 96 | 290 72 | 599 06 | 317 13 | 600 11 | 336 52 |
| GR | 600 4 | 342 97 | 601 21 | 357 10 | 601 51 | 361 46 | 601 60 | 362 21 | 601 98 | 365 09 |
| GR | 603 7 | 378 58 | 604 95 | 386 70 | 604 98 | 386 85 | 607 44 | 394 35 | 608 87 | 398 20 |
| GR | 609 9 | 400 70 | 612 80 | 408 76 | 612 81 | 408 81 | 612 81 | 408 85 | 613 97 | 421 48 |
| GR | 614 5 | 429 65 | 615 36 | 438 00 | 615 45 | 442 34 | 615 56 | 449 38 | 615 37 | 459 38 |
| GR | 615 4 | 459 89 | 615 38 | 460 07 | 615 79 | 464 11 | 620 23 | 469 93 | | |

| | | | | | | | | | | |
|---|---|---|---|---|---|---|---|---|---|---|
| NC | 0 045 | 0 045 | 0 045 | | | | | | | |
| ET | | 9 1 | | | | | | | | 324 00 |
| X1 | 3000 | 44 | 59 80 | 145 06 | 205 31 | 233 92 | 228 00 | | | |
| GR | 614 0 | 0 00 | 613 05 | 2 80 | 610 39 | 11 59 | 602 23 | 35 06 | 598 16 | 49 69 |
| GR | 598 5 | 52 84 | 598 26 | 57 36 | 598 23 | 59 27 | 597 72 | 59 80 | 593 05 | 64 57 |
| GR | 589 1 | 69 76 | 589 22 | 92 91 | 589 28 | 106 83 | 589 32 | 111 46 | 590 81 | 116 18 |
| GR | 595 9 | 132 97 | 596 00 | 144 98 | 596 00 | 145 06 | 596 22 | 186 99 | 596 88 | 221 91 |
| GR | 597 3 | 232 41 | 597 63 | 252 80 | 597 92 | 258 38 | 599 80 | 283 73 | 600 09 | 288 24 |
| GR | 600 8 | 291 39 | 603 07 | 307 27 | 603 21 | 313 29 | 603 55 | 318 05 | 604 25 | 326 80 |
| GR | 605 2 | 333 90 | 605 85 | 338 11 | 608 67 | 351 40 | 609 22 | 353 90 | 611 39 | 358 06 |
| GR | 613 0 | 361 17 | 614 78 | 371 67 | 615 34 | 374 24 | 616 52 | 382 30 | 619 41 | 392 04 |
| GR | 619 5 | 392 46 | 619 61 | 392 86 | 619 69 | 393 25 | 620 03 | 394 22 | | |

| | | | | | | | | | | |
|---|---|---|---|---|---|---|---|---|---|---|
| ET | | 9 1 | | | | | | | 119 00 | 658 05 |
| X1 | 3100 | 57 | 243 32 | 456 99 | 278 47 | 73 46 | 177 00 | | | |
| GR | 620 0 | 0 00 | 618 91 | 5 65 | 618 88 | 11 51 | 617 22 | 22 73 | 615 63 | 33 49 |
| GR | 615 2 | 39 00 | 615 20 | 39 10 | 613 07 | 71 90 | 613 07 | 72 00 | 612 64 | 77 86 |
| GR | 611 7 | 89 80 | 608 60 | 109 47 | 608 49 | 113 29 | 608 23 | 122 76 | 607 09 | 139 29 |
| GR | 606 7 | 150 12 | 604 10 | 180 16 | 603 73 | 188 98 | 603 16 | 199 77 | 601 29 | 237 23 |
| GR | 599 9 | 243 32 | 590 00 | 287 93 | 589 76 | 288 85 | 589 77 | 289 60 | 589 75 | 290 07 |
| GR | 589 7 | 291 22 | 589 60 | 295 87 | 590 07 | 302 75 | 590 07 | 325 65 | 590 83 | 333 56 |
| GR | 593 6 | 371 76 | 593 40 | 431 44 | 593 49 | 438 28 | 593 61 | 443 21 | 593 93 | 454 29 |
| GR | 594 0 | 456 99 | 594 10 | 458 33 | 595 54 | 479 29 | 597 20 | 502 65 | 597 22 | 503 59 |
| GR | 597 5 | 506 72 | 598 30 | 518 76 | 598 75 | 528 21 | 599 14 | 537 06 | 599 66 | 549 42 |
| GR | 599 8 | 552 05 | 599 80 | 553 02 | 599 88 | 554 15 | 600 00 | 556 96 | 600 67 | 570 10 |
| GR | 601 2 | 573 43 | 602 24 | 586 00 | 612 00 | 586 00 | 612 00 | 619 85 | 609 78 | 619 85 |
| GR | 612 33 | 627 08 | 617 80 | 649 37 | 620 00 | 658 15 | | | | |

| | | | | | | | | | | | |
|---|---|---|---|---|---|---|---|---|---|---|---|
| X1 | 3200 | 29 | 93 30 | 223 49 | 349 78 | 243 92 | 308 00 | | | | |
| GR | 620 0 | 0 00 | 618 62 | 3 66 | 617 31 | 7 65 | 614 53 | 15 53 | 614 36 | 16 03 | |
| GR | 614 2 | 16 84 | 608 77 | 39 01 | 603 20 | 65 69 | 601 01 | 82 10 | 600 65 | 86 92 | |
| GR | 600 1 | 93 30 | 597 95 | 116 02 | 596 41 | 123 99 | 596 07 | 126 34 | 596 00 | 126 58 | |
| GR | 595 5 | 128 37 | 592 80 | 134 51 | 589 71 | 142 06 | 589 74 | 144 04 | 590 00 | 169 07 | |
| GR | 590 1 | 176 60 | 590 95 | 187 95 | 593 89 | 223 49 | 595 85 | 247 20 | 596 05 | 257 58 | |
| GR | 596 8 | 261 37 | 602 60 | 297 47 | 613 98 | 359 30 | 619 75 | 381 22 | | | |
| X1 | 3300 | 31 | 133 37 | 249 22 | 153 29 | 147 95 | 187 00 | | | | |
| GR | 620 0 | 0 00 | 619 40 | 2 27 | 617 19 | 11 38 | 617 24 | 11 45 | 614 92 | 25 04 | |
| GR | 613 8 | 29 17 | 613 20 | 38 39 | 613 01 | 41 62 | 612 74 | 43 63 | 611 72 | 49 02 | |
| GR | 609 8 | 63 58 | 606 03 | 88 52 | 600 48 | 133 37 | 599 89 | 138 12 | 597 95 | 150 86 | |
| GR | 595 1 | 168 87 | 590 38 | 185 96 | 589 73 | 187 83 | 589 76 | 190 48 | 590 05 | 208 07 | |
| GR | 595 8 | 239 76 | 597 46 | 249 22 | 601 95 | 274 14 | 607 42 | 306 00 | 611 36 | 326 78 | |
| GR | 612 9 | 341 95 | 612 95 | 342 18 | 613 49 | 344 45 | 616 01 | 355 44 | 616 04 | 356 87 | |
| GR | 619 9 | 371 54 | | | | | | | | | |
| X1 | 3400 | 63 | 307 38 | 469 34 | 253 72 | 163 10 | 167 00 | | | | |
| GR | 620 0 | 0 00 | 618 88 | 12 07 | 618 94 | 12 28 | 619 05 | 12 66 | 619 84 | 16 18 | |
| GR | 619 8 | 17 60 | 619 76 | 18 80 | 619 54 | 19 18 | 618 60 | 22 07 | 618 22 | 22 95 | |
| GR | 618 2 | 23 04 | 617 35 | 28 47 | 617 11 | 30 28 | 615 92 | 43 72 | 615 07 | 53 63 | |
| GR | 614 5 | 57 52 | 614 01 | 64 99 | 612 76 | 75 41 | 611 19 | 93 93 | 610 34 | 106 11 | |
| GR | 609 5 | 116 05 | 608 81 | 126 74 | 607 79 | 140 27 | 607 75 | 146 47 | 607 40 | 155 56 | |
| GR | 606 4 | 172 86 | 606 17 | 175 77 | 604 57 | 193 56 | 604 41 | 196 66 | 603 86 | 214 79 | |
| GR | 603 8 | 217 34 | 603 61 | 220 24 | 602 83 | 231 74 | 602 02 | 260 93 | 601 00 | 281 72 | |
| GR | 600 6 | 290 30 | 599 87 | 307 38 | 599 73 | 310 66 | 598 36 | 332 14 | 595 39 | 372 31 | |
| GR | 595 1 | 376 13 | 591 94 | 376 90 | 590 13 | 390 46 | 589 73 | 392 02 | 589 80 | 394 39 | |
| GR | 589 7 | 402 54 | 589 79 | 403 86 | 589 83 | 405 05 | 590 05 | 406 05 | 598 53 | 460 87 | |
| GR | 599 5 | 468 05 | 599 85 | 469 34 | 601 24 | 474 98 | 606 31 | 495 07 | 607 46 | 502 36 | |
| GR | 608 8 | 511 03 | 609 61 | 515 82 | 615 18 | 547 97 | 615 55 | 550 17 | 615 68 | 550 91 | |
| GR | 615 8 | 551 38 | 617 76 | 556 97 | 620 04 | 564 03 | | | | | |
| X1 | 3500 | 57 | 154 52 | 305 83 | 253 02 | 129 19 | 155 00 | | | | |
| GR | 619 9 | 0 00 | 618 96 | 2 98 | 617 95 | 4 48 | 617 62 | 5 48 | 617 47 | 6 00 | |
| GR | 617 0 | 7 65 | 616 85 | 11 34 | 616 81 | 17 85 | 614 63 | 18 98 | 614 56 | 18 99 | |
| GR | 614 5 | 19 07 | 614 01 | 21 59 | 614 01 | 21 70 | 613 67 | 28 37 | 613 55 | 29 57 | |
| GR | 613 3 | 37 90 | 613 26 | 38 58 | 613 54 | 56 48 | 613 54 | 56 50 | 613 55 | 57 22 | |
| GR | 613 5 | 58 96 | 613 08 | 82 79 | 612 46 | 86 82 | 611 72 | 90 51 | 611 22 | 91 94 | |
| GR | 608 7 | 96 32 | 608 44 | 100 71 | 607 56 | 110 72 | 607 09 | 115 10 | 605 97 | 120 20 | |
| GR | 604 6 | 131 50 | 602 57 | 141 92 | 598 95 | 154 52 | 595 30 | 167 22 | 590 60 | 196 16 | |
| GR | 588 8 | 211 27 | 588 82 | 227 61 | 588 81 | 230 41 | 591 05 | 239 74 | 592 01 | 243 63 | |
| GR | 592 1 | 244 11 | 592 19 | 244 88 | 594 47 | 267 40 | 595 86 | 275 84 | 599 03 | 298 43 | |
| GR | 600 2 | 305 83 | 600 78 | 309 96 | 603 04 | 319 33 | 604 88 | 325 04 | 605 17 | 332 25 | |
| GR | 605 2 | 333 13 | 605 61 | 334 52 | 608 66 | 344 35 | 611 90 | 358 34 | 613 85 | 363 65 | |
| GR | 618 9 | 375 13 | 620 00 | 381 54 | | | | | | | |

| | | | | | | | | | | | |
|---|---|---|---|---|---|---|---|---|---|---|---|
| X1 | 3600 | 68 | 237 09 | 363 79 | 182 65 | 220 76 | 207 00 | | | | |
| GR | 620 2 | 0 00 | 619 82 | 1 83 | 619 40 | 3 12 | 618 91 | 4 29 | 618 80 | 4 74 | |
| GR | 618 8 | 6 21 | 618 59 | 10 01 | 616 78 | 10 33 | 616 60 | 10 59 | 616 26 | 12 29 | |
| GR | 615 5 | 14 76 | 615 65 | 20 80 | 615 60 | 22 02 | 615 58 | 22 28 | 615 48 | 22 35 | |
| GR | 613 2 | 23 39 | 613 03 | 24 30 | 612 68 | 26 16 | 612 73 | 28 93 | 612 75 | 33 40 | |
| GR | 612 6 | 34 81 | 612 29 | 36 31 | 612 24 | 48 63 | 612 17 | 53 84 | 612 05 | 65 47 | |
| GR | 612 6 | 72 28 | 612 77 | 75 42 | 612 65 | 80 84 | 612 03 | 101 75 | 611 25 | 118 30 | |
| GR | 611 2 | 120 11 | 611 16 | 123 45 | 611 17 | 145 24 | 611 44 | 164 62 | 611 53 | 169 95 | |
| GR | 611 5 | 174 51 | 611 23 | 189 92 | 611 07 | 203 69 | 611 10 | 211 52 | 602 44 | 232 08 | |
| GR | 600 4 | 237 09 | 593 70 | 253 60 | 590 59 | 288 24 | 589 39 | 302 06 | 589 30 | 307 65 | |
| GR | 589 2 | 312 06 | 589 14 | 319 38 | 589 70 | 322 92 | 598 08 | 358 16 | 600 56 | 363 79 | |
| GR | 612 9 | 391 67 | 613 22 | 392 48 | 613 22 | 392 55 | 613 75 | 399 69 | 613 76 | 401 63 | |
| GR | 613 8 | 410 13 | 613 80 | 411 31 | 613 69 | 415 45 | 613 50 | 424 05 | 613 12 | 424 92 | |
| GR | 612 0 | 427 20 | 611 26 | 428 93 | 612 00 | 430 75 | 614 20 | 434 19 | 615 87 | 436 56 | |
| GR | 618 1 | 439 57 | 619 66 | 442 12 | 619 89 | 442 34 | | | | | |

| | | | | | | | | | | | |
|---|---|---|---|---|---|---|---|---|---|---|---|
| X1 | 3700 | 80 | 238 79 | 399 52 | 201 21 | 450 21 | 330 00 | | | | |
| GR | 620 0 | 0 00 | 619 08 | 3 64 | 619 39 | 4 19 | 619 10 | 6 95 | 618 61 | 8 43 | |
| GR | 618 4 | 12 68 | 616 02 | 14 63 | 614 55 | 17 32 | 613 84 | 23 76 | 613 36 | 27 57 | |
| GR | 612 6 | 33 42 | 612 46 | 34 44 | 612 28 | 37 18 | 612 28 | 44 23 | 612 11 | 51 40 | |
| GR | 611 8 | 61 47 | 611 31 | 73 69 | 611 09 | 80 43 | 610 32 | 98 78 | 610 27 | 104 40 | |
| GR | 610 3 | 113 46 | 610 28 | 119 41 | 610 33 | 122 59 | 610 27 | 125 19 | 610 51 | 140 34 | |
| GR | 610 5 | 142 02 | 610 52 | 142 47 | 610 70 | 180 74 | 611 43 | 191 21 | 611 16 | 199 12 | |
| GR | 611 1 | 203 42 | 611 09 | 205 01 | 611 11 | 206 75 | 610 06 | 215 28 | 609 64 | 217 74 | |
| GR | 609'7 | 219 61 | 604 33 | 238 15 | 604 12 | 238 79 | 594 20 | 269 69 | 590 39 | 298 62 | |
| GR | 590 3 | 299 33 | 590 29 | 300 16 | 590 31 | 302 06 | 590 43 | 326 44 | 590 71 | 340 03 | |
| GR | 591 7 | 347 36 | 593 21 | 358 34 | 595 00 | 371 35 | 595 67 | 377 81 | 595 59 | 378 94 | |
| GR | 597 1 | 385 00 | 600 35 | 397 94 | 600 63 | 399 52 | 601 21 | 402 72 | 602 70 | 414 00 | |
| GR | 603 6 | 426 84 | 603 91 | 430 67 | 604 66 | 439 46 | 604 75 | 440 31 | 606 06 | 460 95 | |
| GR | 606 1 | 461 56 | 606 16 | 462 06 | 607 42 | 478 41 | 608 31 | 489 12 | 608 97 | 494 96 | |
| GR | 610 0 | 503 00 | 611 48 | 513 55 | 611 89 | 518 20 | 612 12 | 520 16 | 613 15 | 533 80 | |
| GR | 613 1 | 546 98 | 614 04 | 554 73 | 614 48 | 558 05 | 615 39 | 561 98 | 618 88 | 576 81 | |
| GR | 621 8 | 588 46 | 623 28 | 594 15 | 625 12 | 600 43 | 628 44 | 612 20 | 630 00 | 618 12 | |

| | | | | | | | | | | | |
|---|---|---|---|---|---|---|---|---|---|---|---|
| X1 | 3800 | 69 | 175 26 | 408 43 | 159 69 | 498 78 | 260 00 | | | | |
| GR | 620 1 | 0 00 | 618 02 | 1 36 | 616 85 | 3 80 | 616 93 | 10 94 | 617 02 | 15 93 | |
| GR | 617 1 | 20 23 | 617 14 | 26 91 | 616 07 | 32 54 | 614 73 | 37 14 | 613 46 | 43 45 | |
| GR | 610 9 | 61 78 | 610 22 | 66 83 | 608 14 | 82 13 | 607 20 | 87 83 | 607 10 | 89 68 | |
| GR | 607 0 | 90 65 | 605 90 | 111 02 | 605 55 | 118 13 | 605 27 | 125 12 | 605 28 | 132 42 | |
| GR | 605 6 | 146 35 | 605 89 | 156 15 | 603 87 | 175 26 | 601 19 | 200 51 | 597 97 | 224 80 | |
| GR | 593 8 | 263 93 | 592 48 | 284 98 | 591 67 | 296 75 | 591 74 | 303 85 | 591 92 | 321 68 | |
| GR | 592 0 | 324 37 | 593 90 | 368 55 | 594 88 | 373 93 | 595 02 | 375 01 | 598 97 | 397 96 | |
| GR | 600 4 | 408 43 | 601 83 | 419 13 | 608 05 | 447 79 | 608 10 | 460 90 | 608 18 | 462 43 | |
| GR | 609 7 | 479 68 | 611 03 | 493 76 | 611 83 | 503 57 | 612 35 | 513 87 | 613 19 | 518 90 | |
| GR | 613 0 | 521 74 | 613 13 | 523 19 | 612 90 | 525 41 | 613 09 | 526 83 | 613 20 | 529 88 | |
| GR | 613 3 | 540 90 | 614 10 | 552 46 | 614 24 | 554 20 | 614 16 | 555 69 | 613 98 | 564 78 | |
| GR | 613 6 | 580 94 | 613 44 | 593 37 | 613 20 | 600 68 | 613 39 | 610 58 | 613 58 | 624 50 | |
| GR | 614 5 | 641 69 | 615 25 | 652 98 | 615 84 | 662 42 | 616 58 | 672 06 | 617 85 | 688 68 | |
| GR | 618 5 | 694 83 | 619 87 | 709 54 | 619 92 | 709 91 | 620 00 | 710 50 | | | |

| | | | | | | | | | | | |
|---|---|---|---|---|---|---|---|---|---|---|---|
| X1 | 4000 | 66 | 121 74 | 358 71 | 350 29 | 549 02 | 452 00 | | | | |
| GR | 619 9 | 0 00 | 618 62 | 7 83 | 617 15 | 17 94 | 615 85 | 24 16 | 614 80 | 29 54 | |
| GR | 613 7 | 33 55 | 613 59 | 36 68 | 613 56 | 43 04 | 613 27 | 53 58 | 612 59 | 60 96 | |
| GR | 612 0 | 70 76 | 611 17 | 77 14 | 610 89 | 81 62 | 610 37 | 91 15 | 610 26 | 94 00 | |
| GR | 609 8 | 98 71 | 608 85 | 107 97 | 608 63 | 109 80 | 608 63 | 110 71 | 607 43 | 113 47 | |
| GR | 604 8 | 119 04 | 604 33 | 120 58 | 603 96 | 121 74 | 602 10 | 127 60 | 601 93 | 128 76 | |
| GR | 600 2 | 140 32 | 596 40 | 191 05 | 595 71 | 199 86 | 595 45 | 202 83 | 595 29 | 204 53 | |
| GR | 595 0 | 207 83 | 593 71 | 275 78 | 593 64 | 281 54 | 593 70 | 297 99 | 594 87 | 300 90 | |
| GR | 594 8 | 301 14 | 594 70 | 301 59 | 593 38 | 306 34 | 593 39 | 308 37 | 593 39 | 308 97 | |
| GR | 593 4 | 313 10 | 593 43 | 315 39 | 593 45 | 318 03 | 593 46 | 319 69 | 593 47 | 320 99 | |
| GR | 593 5 | 329 03 | 593 52 | 330 04 | 593 99 | 331 34 | 594 95 | 334 93 | 595 81 | 337 48 | |
| GR | 598 9 | 345 30 | 600 07 | 347 13 | 602 72 | 352 01 | 607 40 | 358 71 | 608 96 | 360 94 | |
| GR | 609 2 | 362 19 | 611 50 | 371 26 | 611 95 | 374 15 | 613 24 | 382 19 | 613 40 | 383 60 | |
| GR | 613 7 | 387 01 | 613 83 | 388 70 | 613 94 | 390 34 | 614 27 | 395 20 | 615 10 | 401 81 | |
| GR | 616 0 | 407 37 | | | | | | | | | |

| | | | | | | | | | |
|---|---|---|---|---|---|---|---|---|---|
| SECNO | DEPTH | CWSEL | CRIWS | WSELK | EG | HV | HL | OLOSS | L-BANK ELEV |
| Q | QLOB | QCH | QROB | ALOB | ACH | AROB | VOL | TWA | R-BANK ELEV |
| TIME | VLOB | VCH | VROB | XNL | XNCH | XNR | WTN | ELMIN | SSTA |
| SLOPE | XLOBL | XLCH | XLOBR | ITRIAL | IDC | ICONT | CORAR | TOPWID | ENDST |

*PROF 1

CRITICAL DEPTH TO BE CALCULATED AT ALL CROSS SECTIONS

CCHV= 100 CEHV= 300

*SECNO 100 000

| | | | | | | | | | |
|---|---|---|---|---|---|---|---|---|---|
| 100 000 | 17 50 | 559 00 | 556 19 | 559 00 | 560 33 | 1 33 | 00 | 00 | 548 82 |
| 19000 0 | 7468 3 | 10125 0 | 1406 7 | 1087 0 | 910 4 | 396 5 | 0 | 0 | 550 14 |
| 00 | 6 87 | 11 12 | 3 55 | 045 | 040 | 060 | 000 | 541 50 | 23 57 |
| 002564 | 0 | 0 | 0 | 0 | 11 | 0 | 00 | 289 99 | 313 56 |

FLOW DISTRIBUTION FOR SECNO= 100 00 CWSEL= 559 00

| STA= | 24 | 57 | 71 | 82 | 108 | 139 | 163 | 164 | 223 | 250 | 287 | 314 |
|---|---|---|---|---|---|---|---|---|---|---|---|---|
| PER Q= | 3 7 | 4 1 | 3 3 | 8 3 | 10 8 | 8 7 | 3 | 53 3 | 3 3 | 3 1 | 1 0 | |
| AREA= | 142 2 | 116 3 | 90 2 | 225 9 | 281 1 | 222 5 | 8 7 | 910 4 | 156 5 | 170 6 | 69 5 | |
| VEL= | 4 9 | 6 7 | 6 9 | 7 0 | 7 3 | 7 5 | 7 0 | 11 1 | 4 0 | 3 5 | 2 6 | |
| DEPTH= | 4 3 | 8 0 | 8 4 | 8 6 | 9 2 | 9 4 | 9 9 | 15 3 | 5 7 | 4 6 | 2 6 | |

*SECNO 200 000

| | | | | | | | | | |
|---|---|---|---|---|---|---|---|---|---|
| 200 000 | 18 02 | 559 72 | 555 39 | 00 | 560 55 | 83 | 18 | 05 | 548 12 |
| 19000 0 | 11263 4 | 6697 5 | 1039 1 | 1782 1 | 735 8 | 271 5 | 4 9 | 5 | 549 90 |
| 00 | 6 32 | 9 10 | 3 83 | 045 | 040 | 060 | 000 | 541 70 | 19 88 |
| 001709 | 50 | 118 | 133 | 2 | 14 | 0 | 00 | 277 23 | 297 10 |

FLOW DISTRIBUTION FOR SECNO= 200 00 CWSEL= 559 72

| STA= | 20 | 60 | 83 | 101 | 116 | 134 | 143 | 163 | 174 | 186 | 206 | 208 | 256 |
|---|---|---|---|---|---|---|---|---|---|---|---|---|---|
| PER Q= | 5 8 | 6 4 | 5 8 | 5 3 | 6 2 | 3 3 | 8 2 | 4 3 | 4 7 | 8 0 | 1 2 | 35 3 | |
| AREA= | 231 3 | 204 3 | 177 5 | 157 5 | 182 4 | 93 9 | 228 5 | 120 1 | 133 1 | 222 0 | 31 6 | 735 8 | |
| VEL= | 4 8 | 6 0 | 6 2 | 6 4 | 6 5 | 6 6 | 6 8 | 6 9 | 6 8 | 6 8 | 6 9 | 9 1 | |
| DEPTH= | 5 7 | 9 2 | 9 8 | 10 2 | 10 4 | 10 6 | 11 1 | 11 3 | 11 0 | 11 2 | 11 5 | 15 4 | |

| STA= | 256 | 280 | 297 |
|---|---|---|---|
| PER Q= | 4 3 | 1 2 | |
| AREA= | 194 3 | 77 2 | |
| VEL= | 4 2 | 3 0 | |
| DEPTH= | 8 3 | 4 4 | |

| | | | | | | | | | |
|---|---|---|---|---|---|---|---|---|---|
| SECNO | DEPTH | CWSEL | CRIWS | WSELK | EG | HV | HL | OLOSS | L-BANK ELEV |
| Q | QLOB | QCH | QROB | ALOB | ACH | AROB | VOL | TWA | R-BANK ELEV |
| TIME | VLOB | VCH | VROB | XNL | XNCH | XNR | WTN | ELMIN | SSTA |
| SLOPE | XLOBL | XLCH | XLOBR | ITRIAL | IDC | ICONT | CORAR | TOPWID | ENDST |

*SECNO 400 000

3301 HV CHANGED MORE THAN HVINS

3302 WARNING CONVEYANCE CHANGE OUTSIDE OF ACCEPTABLE RANGE, KRATIO = 66

| | | | | | | | | | |
|---|---|---|---|---|---|---|---|---|---|
| 400 000 | 16 65 | 559 45 | 557 48 | 00 | 561 16 | 1 71 | 34 | 26 | 548 00 |
| 19000 0 | 8949 1 | 8113 8 | 1937 1 | 1098 3 | 607 7 | 356 3 | 12 3 | 1 3 | 550 20 |
| 01 | 8 15 | 13 35 | 5 44 | 045 | 040 | 060 | 000 | 542 80 | 31 33 |
| 003963 | 93 | 184 | 211 | 3 | 15 | 0 | 00 | 252 83 | 284 15 |

FLOW DISTRIBUTION FOR SECNO= 400 00 CWSEL= 559 45

| STA= | 31 | 70 | 100 | 110 | 142 | 153 | 161 | 173 | 182 | 185 | 225 | 245 | 265 |
|---|---|---|---|---|---|---|---|---|---|---|---|---|---|
| PER Q= | 4 6 | 7 7 | 3 2 | 12 2 | 5 1 | 3 5 | 5 6 | 4 3 | 1 0 | 42 7 | 4 8 | 4 1 | |
| AREA= | 152 5 | 197 3 | 75 0 | 269 2 | 106 2 | 72 9 | 114 8 | 86 9 | 23 6 | 607 7 | 155 5 | 137 2 | |
| VEL= | 5 7 | 7 4 | 8 0 | 8 6 | 9 2 | 9 2 | 9 2 | 9 3 | 8 2 | 13 4 | 5 9 | 5 7 | |
| DEPTH= | 3 9 | 6 7 | 7 5 | 8 5 | 9 2 | 9 3 | 9 3 | 9 5 | 10 4 | 15 2 | 7 5 | 7 1 | |

| STA= | 265 | 284 |
|---|---|---|
| PER Q= | 1 2 | |
| AREA= | 63 7 | |
| VEL= | 3 7 | |
| DEPTH= | 3 3 | |

*SECNO 500 000

3301 HV CHANGED MORE THAN HVINS

| | | | | | | | | | |
|---|---|---|---|---|---|---|---|---|---|
| 500 000 | 17 21 | 560 52 | 557 63 | 00 | 561 62 | 1 10 | 40 | 06 | 549 99 |
| 19000 0 | 4666 1 | 7377 2 | 6956 8 | 541 5 | 832 7 | 893 1 | 19 3 | 2 3 | 552 30 |
| 01 | 8 62 | 8 86 | 7 79 | 030 | 045 | 030 | 000 | 543 31 | 21 86 |
| 002122 | 73 | 160 | 207 | 3 | 14 | 0 | 00 | 342 70 | 364 56 |

FLOW DISTRIBUTION FOR SECNO= 500 00 CWSEL= 560 52

| | | | | | | | | | |
|---|---|---|---|---|---|---|---|---|---|
| SECNO | DEPTH | CWSEL | CRIWS | WSELK | EG | HV | HL | OLOSS | L-BANK ELEV |
| Q | QLOB | QCH | QROB | ALOB | ACH | AROB | VOL | TWA | R-BANK ELEV |
| TIME | VLOB | VCH | VROB | XNL | XNCH | XNR | WTN | ELMIN | SSTA |
| SLOPE | XLOBL | XLCH | XLOBR | ITRIAL | IDC | ICONT | CORAR | TOPWID | ENDST |

| STA= | 22 | 50 | 65 | 82 | 90 | 105 | 160 | 174 | 189 | 206 | 219 | 228 | 238 |
|---|---|---|---|---|---|---|---|---|---|---|---|---|---|
| PER Q= | 3 2 | 4 3 | 5 9 | 3 4 | 7 8 | 38 8 | 5 2 | 4 5 | 5 3 | 4 4 | 3 6 | 4 1 | |
| AREA= | 102 5 | 100 7 | 127 1 | 68 0 | 143 2 | 832 7 | 112 1 | 102 3 | 122 7 | 95 4 | 71 7 | 86 1 | |
| VEL= | 5 9 | 8 1 | 8 9 | 9 5 | 10 3 | 8 9 | 8 8 | 8 4 | 8 3 | 8 7 | 9 4 | 9 0 | |
| DEPTH= | 3 6 | 6 7 | 7 7 | 8 5 | 9 6 | 15 2 | 7 6 | 7 1 | 6 9 | 7 5 | 8 4 | 8 0 | |

| STA= | 238 | 257 | 286 | 365 |
|---|---|---|---|---|
| PER Q= | 5 3 | 3 2 | 9 | |
| AREA= | 123 3 | 106 5 | 73 1 | |
| VEL= | 8 2 | 5 8 | 2 4 | |
| DEPTH= | 6 8 | 3 7 | 9 | |

*SECNO 600 000

3301 HV CHANGED MORE THAN HVINS

7185 MINIMUM SPECIFIC ENERGY
3720 CRITICAL DEPTH ASSUMED

| | | | | | | | | | |
|---|---|---|---|---|---|---|---|---|---|
| 600 000 | 13 83 | 560 43 | 560 43 | 00 | 563 00 | 2 57 | 56 | 44 | 552 07 |
| 19000 0 | 1372 8 | 9897 1 | 7730 2 | 110 4 | 706 8 | 682 1 | 26 3 | 3 5 | 552 20 |
| 02 | 12 43 | 14 00 | 11 33 | 030 | 045 | 030 | 000 | 546 60 | 32 55 |
| 006849 | 131 | 165 | 169 | 0 | 15 | 0 | 00 | 282 10 | 314 64 |

FLOW DISTRIBUTION FOR SECNO= 600 00 CWSEL= 560 43

| STA= | 33 | 54 | 57 | 116 | 145 | 171 | 187 | 210 | 234 | 315 |
|---|---|---|---|---|---|---|---|---|---|---|
| PER Q= | 5 6 | 1 7 | 52 1 | 13 2 | 9 9 | 5 8 | 5 8 | 3 2 | 2 7 | |
| AREA= | 90 9 | 19 5 | 706 8 | 183 2 | 144 1 | 88 9 | 100 8 | 70 3 | 94 7 | |
| VEL= | 11 6 | 16 2 | 14 0 | 13 7 | 13 1 | 12 5 | 11 0 | 8 5 | 5 4 | |
| DEPTH= | 4 2 | 8 1 | 11 9 | 6 2 | 5 7 | 5 3 | 4 4 | 2 9 | 1 2 | |

*SECNO 700 000

3301 HV CHANGED MORE THAN HVINS

3302 WARNING CONVEYANCE CHANGE OUTSIDE OF ACCEPTABLE RANGE, KRATIO = 1 96

| | | | | | | | | | |
|---|---|---|---|---|---|---|---|---|---|
| 700 000 | 15 15 | 563 25 | 561 13 | 00 | 563 95 | 70 | 76 | 19 | 554 16 |
| 19000 0 | 533 1 | 7131 3 | 11335 5 | 84 8 | 942 2 | 1838 6 | 38 5 | 5 6 | 556 00 |
| 03 | 6 29 | 7 57 | 6 17 | 030 | 045 | 030 | 000 | 548 10 | 51 14 |
| 001774 | 241 | 253 | 237 | 3 | 10 | 0 | 00 | 490 32 | 541 46 |

| | | | | | | | | | |
|---|---|---|---|---|---|---|---|---|---|
| SECNO | DEPTH | CWSEL | CRIWS | WSELK | EG | HV | HL | OLOSS | L-BANK ELEV |
| Q | QLOB | QCH | QROB | ALOB | ACH | AROB | VOL | TWA | R-BANK ELEV |
| TIME | VLOB | VCH | VROB | XNL | XNCH | XNR | WTN | ELMIN | SSTA |
| SLOPE | XLOBL | XLCH | XLOBR | ITRIAL | IDC | ICONT | CORAR | TOPWID | ENDST |

FLOW DISTRIBUTION FOR SECNO= 700 00 CWSEL= 563 25

| STA= | 51 | 69 | 141 | 175 | 205 | 232 | 244 | 261 | 281 | 325 | 356 | 384 | 413 |
|---|---|---|---|---|---|---|---|---|---|---|---|---|---|
| PER Q= | 2 8 | 37 5 | 8 6 | 7 0 | 6 5 | 3 2 | 4 3 | 4 4 | 6 7 | 3 0 | 3 1 | 3 5 | |
| AREA= | 84 8 | 942 2 | 223 6 | 186 3 | 172 7 | 83 6 | 112 4 | 119 5 | 212 9 | 114 0 | 112 5 | 121 0 | |
| VEL= | 6 3 | 7 6 | 7 3 | 7 2 | 7 2 | 7 4 | 7 3 | 7 0 | 5 9 | 5 0 | 5 2 | 5 5 | |
| DEPTH= | 4 7 | 13 1 | 6 5 | 6 4 | 6 4 | 6 7 | 6 5 | 6 1 | 4 8 | 3 8 | 3 9 | 4 2 | |

| STA= | 413 | 440 | 475 | 541 |
|---|---|---|---|---|
| PER Q= | 3 1 | 3 4 | 2 8 | |
| AREA= | 112 2 | 128 2 | 139 5 | |
| VEL= | 5 3 | 5 0 | 3 8 | |
| DEPTH= | 4 1 | 3 7 | 2 1 | |

*SECNO 800 000

| | | | | | | | | | |
|---|---|---|---|---|---|---|---|---|---|
| 800 000 | 15 50 | 563 63 | 561 77 | 00 | 564 39 | 76 | 42 | 02 | 554 16 |
| 19000 0 | 5710 1 | 7669 3 | 5620 6 | 768 2 | 970 2 | 1129 4 | 53 6 | 8 3 | 555 70 |
| 03 | 7 43 | 7 91 | 4 98 | 030 | 045 | 030 | 000 | 548 13 | 91 52 |
| 001820 | 300 | 259 | 192 | 2 | 12 | 0 | 00 | 578 88 | 670 40 |

FLOW DISTRIBUTION FOR SECNO= 800 00 CWSEL= 563 63

| STA= | 92 | 170 | 200 | 233 | 240 | 311 | 332 | 372 | 421 | 476 | 528 | 586 | 670 |
|---|---|---|---|---|---|---|---|---|---|---|---|---|---|
| PER Q= | 5 9 | 9 6 | 11 7 | 2 8 | 40 4 | 5 5 | 5 7 | 3 9 | 3 7 | 4 1 | 4 5 | 2 1 | |
| AREA= | 218 8 | 225 9 | 263 5 | 60 0 | 970 2 | 142 3 | 182 3 | 160 4 | 162 2 | 169 3 | 186 7 | 126 2 | |
| VEL= | 5 2 | 8 1 | 8 4 | 8 8 | 7 9 | 7 4 | 5 9 | 4 6 | 4 4 | 4 6 | 4 6 | 3 2 | |
| DEPTH= | 2 8 | 7 5 | 8 0 | 8 7 | 13 8 | 6 6 | 4 7 | 3 2 | 3 0 | 3 2 | 3 2 | 1 5 | |

*SECNO 900 000

| | | | | | | | | | |
|---|---|---|---|---|---|---|---|---|---|
| 900 000 | 15 98 | 564 18 | 560 72 | 00 | 565 05 | 88 | 63 | 03 | 556 14 |
| 19000 0 | 2504 0 | 11450 9 | 5045 1 | 346 8 | 1404 6 | 842 2 | 73 8 | 11 8 | 556 77 |
| 05 | 7 22 | 8 15 | 5 99 | 030 | 045 | 030 | 000 | 548 20 | 44 70 |
| 002009 | 326 | 362 | 270 | 2 | 15 | 0 | 00 | 464 61 | 509 32 |

FLOW DISTRIBUTION FOR SECNO= 900 00 CWSEL= 564 18

| STA= | 45 | 75 | 92 | 105 | 111 | 216 | 238 | 258 | 275 | 290 | 347 | 499 | 509 |
|---|---|---|---|---|---|---|---|---|---|---|---|---|---|
| PER Q= | 3 4 | 4 3 | 3 8 | 1 7 | 60 3 | 6 8 | 5 3 | 4 3 | 3 2 | 3 9 | 3 0 | 0 | |
| AREA= | 107 8 | 107 9 | 90 3 | 40 7 | 1404 6 | 158 9 | 128 4 | 109 0 | 85 3 | 162 8 | 195 8 | 2 1 | |
| VEL= | 6 0 | 7 5 | 7 9 | 8 1 | 8 2 | 8 2 | 7 8 | 7 5 | 7 1 | 4 6 | 2 9 | 8 | |
| DEPTH= | 3 6 | 6 2 | 6 7 | 7 2 | 13 4 | 7 1 | 6 6 | 6 2 | 5 7 | 2 9 | 1 3 | 2 | |

| | | | | | | | | | |
|---|---|---|---|---|---|---|---|---|---|
| SECNO | DEPTH | CWSEL | CRIWS | WSELK | EG | HV | HL | OLOSS | L-BANK ELEV |
| Q | QLOB | QCH | QROB | ALOB | ACH | AROB | VOL | TWA | R-BANK ELEV |
| TIME | VLOB | VCH | VROB | XNL | XNCH | XNR | WTN | ELMIN | SSTA |
| SLOPE | XLOBL | XLCH | XLOBR | ITRIAL | IDC | ICONT | CORAR | TOPWID | ENDST |

*SECNO 990 000

3301 HV CHANGED MORE THAN HVINS

3470 ENCROACHMENT STATIONS= 224 0 658 0 TYPE= 1 TARGET= 434 010

| | | | | | | | | | |
|---|---|---|---|---|---|---|---|---|---|
| 990 000 | 14 72 | 564 25 | 560 90 | 00 | 565 91 | 1 66 | 62 | 24 | 555 94 |
| 19000 0 | 2081 3 | 16182 9 | 735 8 | 216 0 | 1527 5 | 132 9 | 85 8 | 13 7 | 556 25 |
| 05 | 9 63 | 10 59 | 5 54 | 030 | 045 | 030 | 000 | 549 53 | 237 03 |
| 003590 | 277 | 241 | 190 | 2 | 19 | 0 | 00 | 251 63 | 488 66 |

FLOW DISTRIBUTION FOR SECNO= 990 00 CWSEL= 564 25

| STA= | 237 | 265 | 273 | 278 | 400 | 434 | 489 |
|---|---|---|---|---|---|---|---|
| PER Q= | 5 5 | 3 2 | 2 3 | 85 2 | 3 3 | 5 | |
| AREA= | 122 0 | 56 2 | 37 8 | 1527 5 | 96 3 | 36 6 | |
| VEL= | 8 5 | 10 8 | 11 5 | 10 6 | 6 6 | 2 8 | |
| DEPTH= | 4 4 | 6 9 | 7 8 | 12 5 | 2 8 | 7 | |

*SECNO 1000 000

3301 HV CHANGED MORE THAN HVINS

3470 ENCROACHMENT STATIONS= 234 7 731 5 TYPE= 1 TARGET= 496 790

| | | | | | | | | | |
|---|---|---|---|---|---|---|---|---|---|
| 1000 000 | 15 57 | 565 56 | 561 73 | 00 | 566 57 | 1 01 | 59 | 07 | 556 00 |
| 19000 0 | 3455 9 | 13725 6 | 1818 6 | 441 8 | 1647 9 | 297 5 | 96 5 | 15 0 | 560 20 |
| 06 | 7 82 | 8 33 | 6 11 | 030 | 045 | 030 | 000 | 549 99 | 236 62 |
| 002101 | 70 | 243 | 257 | 3 | 15 | 0 | 00 | 298 89 | 535 52 |

FLOW DISTRIBUTION FOR SECNO= 1000 00 CWSEL= 565 56

| STA= | 237 | 271 | 283 | 302 | 312 | 436 | 456 | 484 | 536 |
|---|---|---|---|---|---|---|---|---|---|
| PER Q= | 5 4 | 3 6 | 5 5 | 3 7 | 72 2 | 3 6 | 4 8 | 1 1 | |
| AREA= | 148 0 | 85 3 | 129 0 | 79 5 | 1647 9 | 101 3 | 139 4 | 56 8 | |
| VEL= | 6 9 | 8 1 | 8 2 | 8 8 | 8 3 | 6 8 | 6 5 | 3 8 | |
| DEPTH= | 4 3 | 6 7 | 6 8 | 7 9 | 13 3 | 5 2 | 4 9 | 1 1 | |

| | | | | | | | | | |
|---|---|---|---|---|---|---|---|---|---|
| SECNO | DEPTH | CWSEL | CRIWS | WSELK | EG | HV | HL | OLOSS | L-BANK ELEV |
| Q | QLOB | QCH | QROB | ALOB | ACH | AROB | VOL | TWA | R-BANK ELEV |
| TIME | VLOB | VCH | VROB | XNL | XNCH | XNR | WTN | ELMIN | SSTA |
| SLOPE | XLOBL | XLCH | XLOBR | ITRIAL | IDC | ICONT | CORAR | TOPWID | ENDST |

*SECNO 1100 000

3301 HV CHANGED MORE THAN HVINS

3302 WARNING CONVEYANCE CHANGE OUTSIDE OF ACCEPTABLE RANGE, KRATIO = 59

3470 ENCROACHMENT STATIONS= 318 5 795 8 TYPE= 1 TARGET= 477 220

| | | | | | | | | | |
|---|---|---|---|---|---|---|---|---|---|
| 1100 000 | 13 87 | 566 07 | 565 51 | 00 | 568 13 | 2 06 | 1 25 | 32 | 562 46 |
| 19000 0 | 176 1 | 10135 6 | 8688 3 | 37 2 | 798 2 | 859 3 | 114 1 | 17 6 | 560 21 |
| 07 | 4 74 | 12 70 | 10 11 | 030 | 045 | 030 | 000 | 552 20 | 332 30 |
| 006062 | 510 | 379 | 316 | 3 | 9 | 0 | 00 | 310 60 | 642 90 |

FLOW DISTRIBUTION FOR SECNO= 1100 00 CWSEL= 566 07

| STA= | 332 | 363 | 429 | 449 | 470 | 484 | 517 | 543 | 568 | 593 | 615 | 643 |
|---|---|---|---|---|---|---|---|---|---|---|---|---|
| PER Q= | 9 | 53 3 | 4 8 | 5 6 | 4 0 | 9 5 | 6 2 | 5 3 | 4 8 | 3 9 | 1 5 | |
| AREA= | 37 2 | 798 2 | 90 2 | 98 6 | 68 5 | 163 2 | 112 3 | 103 4 | 96 1 | 80 8 | 46 2 | |
| VEL= | 4 7 | 12 7 | 10 2 | 10 9 | 11 2 | 11 1 | 10 5 | 9 7 | 9 5 | 9 2 | 6 2 | |
| DEPTH= | 1 2 | 12 2 | 4 4 | 4 7 | 5 0 | 4 9 | 4 5 | 4 0 | 3 8 | 3 7 | 1 7 | |

CCHV= 300 CEHV= 500

*SECNO 1150 000

3301 HV CHANGED MORE THAN HVINS

3302 WARNING CONVEYANCE CHANGE OUTSIDE OF ACCEPTABLE RANGE, KRATIO = 1 45

3470 ENCROACHMENT STATIONS= 346 3 760 0 TYPE= 1 TARGET= 413 720

| | | | | | | | | | |
|---|---|---|---|---|---|---|---|---|---|
| 1150 000 | 16 05 | 568 23 | 566 43 | 00 | 569 40 | 1 17 | 99 | 27 | 561 80 |
| 19000 0 | 724 3 | 9995 2 | 8280 5 | 131 6 | 1046 2 | 1069 8 | 125 3 | 19 5 | 559 87 |
| 08 | 5 50 | 9 55 | 7 74 | 030 | 045 | 030 | 000 | 552 18 | 356 23 |
| 002899 | 170 | 223 | 276 | 4 | 8 | 0 | 00 | 369 67 | 725 90 |

FLOW DISTRIBUTION FOR SECNO= 1150 00 CWSEL= 568 23

| | | | | | | | | | |
|---|---|---|---|---|---|---|---|---|---|
| SECNO | DEPTH | CWSEL | CRIWS | WSELK | EG | HV | HL | OLOSS | L-BANK ELEV |
| Q | QLOB | QCH | QROB | ALOB | ACH | AROB | VOL | TWA | R-BANK ELEV |
| TIME | VLOB | VCH | VROB | XNL | XNCH | XNR | WTN | ELMIN | SSTA |
| SLOPE | XLOBL | XLCH | XLOBR | ITRIAL | IDC | ICONT | CORAR | TOPWID | ENDST |

| STA= | 356 | 407 | 408 | 489 | 515 | 545 | 572 | 612 | 630 | 657 | 684 | 726 |
|---|---|---|---|---|---|---|---|---|---|---|---|---|
| PER Q= | 3 5 | 3 | 52 6 | 7 3 | 8 6 | 7 0 | 8 8 | 3 1 | 3 7 | 3 1 | 1 9 | |
| AREA= | 125 9 | 5 8 | 1046 2 | 158 5 | 183 7 | 154 4 | 209 4 | 81 1 | 106 0 | 95 2 | 81 3 | |
| VEL= | 5 4 | 8 7 | 9 6 | 8 8 | 8 8 | 8 6 | 8 0 | 7 3 | 6 7 | 6 1 | 4 5 | |
| DEPTH= | 2 5 | 6 3 | 12 9 | 6 1 | 6 0 | 5 8 | 5 2 | 4 5 | 4 0 | 3 5 | 1 9 | |

*SECNO 1175 000

| | | | | | | | | | |
|---|---|---|---|---|---|---|---|---|---|
| 1175 000 | 15 60 | 568 85 | 564 49 | 00 | 569 76 | 92 | 29 | 08 | 561 10 |
| 19000 0 | 1246 1 | 15040 3 | 2713 6 | 211 8 | 1842 7 | 503 9 | 132 0 | 20 6 | 560 18 |
| 08 | 5 88 | 8 16 | 5 39 | 030 | 045 | 030 | 000 | 553 25 | 30 96 |
| 002060 | 96 | 115 | 140 | 2 | 15 | 0 | 00 | 371 74 | 402 70 |

FLOW DISTRIBUTION FOR SECNO= 1175 00 CWSEL= 568 85

| STA= | 31 | 39 | 63 | 85 | 96 | 240 | 254 | 283 | 310 | 333 | 365 | 400 | 403 |
|---|---|---|---|---|---|---|---|---|---|---|---|---|---|
| PER Q= | 0 | 8 | 2 8 | 3 0 | 79 2 | 3 9 | 4 0 | 2 6 | 1 6 | 1 4 | 7 | 0 | |
| AREA= | 3 4 | 43 4 | 92 7 | 72 3 | 1842 7 | 94 6 | 127 2 | 95 9 | 65 8 | 70 3 | 48 9 | 1 3 | |
| VEL= | 1 3 | 3 4 | 5 8 | 7 8 | 8 2 | 7 8 | 6 0 | 5 2 | 4 5 | 3 8 | 2 8 | 1 3 | |
| DEPTH= | 4 | 1 8 | 4 1 | 6 6 | 12 8 | 6 8 | 4 4 | 3 6 | 2 9 | 2 2 | 1 4 | 5 | |

*SECNO 1200 000

| | | | | | | | | | |
|---|---|---|---|---|---|---|---|---|---|
| 1200 000 | 11 11 | 568 71 | 566 77 | 00 | 570 05 | 1 33 | 07 | 21 | 562 50 |
| 19000 0 | 1277 7 | 15256 6 | 2465 7 | 250 0 | 1536 4 | 407 0 | 133 5 | 20 8 | 561 09 |
| 08 | 5 11 | 9 93 | 6 06 | 039 | 039 | 039 | 000 | 557 60 | 207 40 |
| 003394 | 30 | 30 | 20 | 2 | 11 | 0 | 00 | 378 19 | 585 59 |

FLOW DISTRIBUTION FOR SECNO= 1200 00 CWSEL= 568 71

| STA= | 207 | 231 | 264 | 296 | 310 | 472 | 482 | 498 | 525 | 547 | 586 |
|---|---|---|---|---|---|---|---|---|---|---|---|
| PER Q= | 0 | 8 | 3 0 | 2 9 | 80 3 | 3 3 | 3 7 | 3 4 | 1 8 | 7 | |
| AREA= | 8 4 | 50 8 | 111 5 | 79 2 | 1536 4 | 74 4 | 95 7 | 112 0 | 72 6 | 52 4 | |
| VEL= | 1 1 | 3 0 | 5 1 | 6 9 | 9 9 | 8 5 | 7 3 | 5 8 | 4 8 | 2 7 | |
| DEPTH= | 4 | 1 5 | 3 5 | 5 5 | 9 5 | 7 4 | 6 0 | 4 2 | 3 2 | 1 4 | |

*SECNO 1225 000

3301 HV CHANGED MORE THAN HVINS

| | | | | | | | | | |
|---|---|---|---|---|---|---|---|---|---|
| SECNO | DEPTH | CWSEL | CRIWS | WSELK | EG | HV | HL | OLOSS | L-BANK ELEV |
| Q | QLOB | QCH | QROB | ALOB | ACH | AROB | VOL | TWA | R-BANK ELEV |
| TIME | VLOB | VCH | VROB | XNL | XNCH | XNR | WTN | ELMIN | SSTA |
| SLOPE | XLOBL | XLCH | XLOBR | ITRIAL | IDC | ICONT | CORAR | TOPWID | ENDST |

7185 MINIMUM SPECIFIC ENERGY

3720 CRITICAL DEPTH ASSUMED

| | | | | | | | | | |
|---|---|---|---|---|---|---|---|---|---|
| 1225 000 | 6 57 | 568 61 | 568 61 | 00 | 570 84 | 2 24 | 01 | 45 | 563 32 |
| 18740 0 | 1922 6 | 13125 9 | 3691 5 | 226 0 | 1011 0 | 380 9 | 133 7 | 20 9 | 563 20 |
| 08 | 8 51 | 12 98 | 9 69 | 018 | 018 | 018 | 000 | 562 04 | 213 71 |
| 002165 | 5 | 5 | 5 | 0 | 14 | 0 | 00 | 369 96 | 583 67 |

FLOW DISTRIBUTION FOR SECNO= 1225 00 CWSEL= 568 61

| STA= | 214 | 288 | 303 | 309 | 471 | 486 | 498 | 511 | 526 | 546 | 584 |
|---|---|---|---|---|---|---|---|---|---|---|---|
| PER Q= | 4 7 | 3 6 | 1 9 | 70 0 | 4 9 | 3 6 | 3 3 | 3 0 | 3 1 | 1 8 | |
| AREA= | 129 5 | 65 1 | 31 4 | 1011 0 | 78 5 | 59 6 | 60 0 | 57 9 | 66 9 | 58 1 | |
| VEL= | 6 8 | 10 4 | 11 5 | 13 0 | 11 6 | 11 3 | 10 4 | 9 7 | 8 6 | 5 8 | |
| DEPTH= | 1 7 | 4 5 | 5 2 | 6 2 | 5 3 | 5 1 | 4 5 | 4 0 | 3 4 | 1 5 | |

*SECNO 1250 000

3301 HV CHANGED MORE THAN HVINS

3302 WARNING CONVEYANCE CHANGE OUTSIDE OF ACCEPTABLE RANGE, KRATIO = 1 40

| | | | | | | | | | |
|---|---|---|---|---|---|---|---|---|---|
| 1250 000 | 7 67 | 569 74 | 568 65 | 00 | 571 13 | 1 39 | 03 | 25 | 563 21 |
| 18740 0 | 2514 1 | 12361 3 | 3864 6 | 369 2 | 1194 6 | 496 9 | 134 6 | 21 0 | 563 35 |
| 08 | 6 81 | 10 35 | 7 78 | 018 | 018 | 018 | 000 | 562 07 | 173 04 |
| 001102 | 20 | 20 | 19 | 13 | 5 | 0 | 00 | 415 14 | 588 18 |

FLOW DISTRIBUTION FOR SECNO= 1250 00 CWSEL= 569 74

| STA= | 173 | 264 | 284 | 304 | 305 | 468 | 480 | 493 | 524 | 550 | 588 |
|---|---|---|---|---|---|---|---|---|---|---|---|
| PER Q= | 3 9 | 3 6 | 5 5 | 4 | 66 0 | 3 7 | 3 8 | 7 3 | 3 8 | 1 9 | |
| AREA= | 154 4 | 90 6 | 116 7 | 7 4 | 1194 6 | 75 4 | 79 4 | 163 5 | 103 8 | 74 9 | |
| VEL= | 4 8 | 7 4 | 8 8 | 9 5 | 10 3 | 9 3 | 9 1 | 8 4 | 6 9 | 4 8 | |
| DEPTH= | 1 7 | 4 5 | 5 8 | 6 5 | 7 3 | 6 3 | 6 0 | 5 3 | 4 0 | 1 9 | |

*SECNO 1300 000

3265 DIVIDED FLOW

| | | | | | | | | | |
|---|---|---|---|---|---|---|---|---|---|
| SECNO | DEPTH | CWSEL | CRIWS | WSELK | EG | HV | HL | OLOSS | L-BANK ELEV |
| Q | QLOB | QCH | QROB | ALOB | ACH | AROB | VOL | TWA | R-BANK ELEV |
| TIME | VLOB | VCH | VROB | XNL | XNCH | XNR | WTN | ELMIN | SSTA |
| SLOPE | XLOBL | XLCH | XLOBR | ITRIAL | IDC | ICONT | CORAR | TOPWID | ENDST |

3302 WARNING CONVEYANCE CHANGE OUTSIDE OF ACCEPTABLE RANGE, KRATIO = 66

| | | | | | | | | | |
|---|---|---|---|---|---|---|---|---|---|
| 1300 000 | 10 64 | 570 32 | 568 16 | 00 | 571 27 | 95 | 01 | 13 | 563 61 |
| 19000 0 | 2865 0 | 12069 5 | 4065 5 | 442 1 | 1472 0 | 546 8 | 134 8 | 21 1 | 563 30 |
| 08 | 6 48 | 8 20 | 7 43 | 030 | 040 | 030 | 000 | 559 68 | 125 24 |
| 002599 | 6 | 5 | 6 | 3 | 8 | 0 | 00 | 428 53 | 560 18 |

FLOW DISTRIBUTION FOR SECNO= 1300 00 CWSEL= 570 32

| STA= | 125 | 231 | 252 | 271 | 274 | 437 | 449 | 459 | 476 | 491 | 515 | 555 | 560 |
|---|---|---|---|---|---|---|---|---|---|---|---|---|---|
| PER Q= | 5 5 | 3 5 | 5 1 | 1 0 | 63 5 | 3 7 | 3 0 | 4 1 | 3 4 | 4 1 | 3 1 | 0 | |
| AREA= | 210 4 | 94 4 | 115 8 | 21 6 | 1472 0 | 77 6 | 66 1 | 95 4 | 82 2 | 111 3 | 112 1 | 2 2 | |
| VEL= | 5 0 | 7 0 | 8 3 | 9 0 | 8 2 | 8 9 | 8 7 | 8 2 | 7 8 | 7 1 | 5 3 | 1 4 | |
| DEPTH= | 2 0 | 4 7 | 6 0 | 6 7 | 9 0 | 6 7 | 6 4 | 5 8 | 5 4 | 4 7 | 2 8 | 4 | |

*SECNO 1350 000

3265 DIVIDED FLOW

3301 HV CHANGED MORE THAN HVINS

7185 MINIMUM SPECIFIC ENERGY
3720 CRITICAL DEPTH ASSUMED

| | | | | | | | | | |
|---|---|---|---|---|---|---|---|---|---|
| 1350 000 | 11 27 | 570 95 | 570 95 | 00 | 573 00 | 2 06 | 42 | 56 | 565 98 |
| 19000 0 | 3087 1 | 11687 7 | 4225 1 | 442 5 | 935 2 | 374 1 | 140 2 | 22 3 | 564 12 |
| 09 | 6 98 | 12 50 | 11 30 | 030 | 040 | 030 | 000 | 559 68 | 131 63 |
| 006117 | 122 | 111 | 99 | 0 | 8 | 0 | 00 | 464 10 | 604 72 |

FLOW DISTRIBUTION FOR SECNO= 1350 00 CWSEL= 570 95

| STA= | 132 | 329 | 380 | 408 | 420 | 524 | 543 | 552 | 567 | 588 | 605 |
|---|---|---|---|---|---|---|---|---|---|---|---|
| PER Q= | 4 1 | 4 7 | 4 5 | 2 9 | 61 5 | 8 1 | 3 2 | 4 4 | 5 0 | 1 5 | |
| AREA= | 167 0 | 125 0 | 97 6 | 52 7 | 935 2 | 116 7 | 51 1 | 74 1 | 93 1 | 39 1 | |
| VEL= | 4 7 | 7 1 | 8 8 | 10 6 | 12 5 | 13 1 | 11 9 | 11 3 | 10 2 | 7 4 | |
| DEPTH= | 8 | 2 5 | 3 4 | 4 5 | 9 0 | 6 3 | 5 4 | 5 0 | 4 3 | 2 4 | |

| | | | | | | | | | |
|---|---|---|---|---|---|---|---|---|---|
| SECNO | DEPTH | CWSEL | CRIWS | WSELK | EG | HV | HL | OLOSS | L-BANK ELEV |
| Q | QLOB | QCH | QROB | ALOB | ACH | AROB | VOL | TWA | R-BANK ELEV |
| TIME | VLOB | VCH | VROB | XNL | XNCH | XNR | WTN | ELMIN | SSTA |
| SLOPE | XLOBL | XLCH | XLOBR | ITRIAL | IDC | ICONT | CORAR | TOPWID | ENDST |

CCHV= 100 CEHV= 300

*SECNO 1400 000

3265 DIVIDED FLOW

7185 MINIMUM SPECIFIC ENERGY

3720 CRITICAL DEPTH ASSUMED

| | | | | | | | | | |
|---|---|---|---|---|---|---|---|---|---|
| 1400 000 | 13 35 | 572 75 | 572 75 | 00 | 575 03 | 2 28 | 92 | 07 | 568 00 |
| 19000 0 | 6356 0 | 9932 6 | 2711 3 | 706 3 | 707 5 | 251 7 | 145 8 | 23 5 | 565 84 |
| 09 | 9 00 | 14 04 | 10 77 | 030 | 040 | 030 | 000 | 559 40 | 73 26 |
| 006408 | 99 | 149 | 203 | 0 | 11 | 0 | 00 | 367 72 | 441 46 |

FLOW DISTRIBUTION FOR SECNO= 1400 00 CWSEL= 572 75

| STA= | 73 | 149 | 181 | 203 | 234 | 259 | 288 | 308 | 314 | 380 | 392 | 411 | 431 |
|---|---|---|---|---|---|---|---|---|---|---|---|---|---|
| PER Q= | 3 0 | 3 3 | 3 3 | 6 0 | 5 3 | 6 3 | 4 5 | 1 7 | 52 3 | 4 4 | 5 7 | 3 6 | |
| AREA= | 101 8 | 82 9 | 73 2 | 117 6 | 98 9 | 120 2 | 82 7 | 29 0 | 707 5 | 67 8 | 94 7 | 71 5 | |
| VEL= | 5 7 | 7 6 | 8 7 | 9 6 | 10 1 | 10 0 | 10 4 | 10 9 | 14 0 | 12 4 | 11 5 | 9 5 | |
| DEPTH= | 1 3 | 2 6 | 3 2 | 3 8 | 4 1 | 4 0 | 4 2 | 4 6 | 10 8 | 5 6 | 4 9 | 3 7 | |

| STA= | 431 | 441 |
|---|---|---|
| PER Q= | 6 | |
| AREA= | 17 6 | |
| VEL= | 6 3 | |
| DEPTH= | 1 7 | |

*SECNO 1500 000

3301 HV CHANGED MORE THAN HVINS

7185 MINIMUM SPECIFIC ENERGY

3720 CRITICAL DEPTH ASSUMED

| | | | | | | | | | |
|---|---|---|---|---|---|---|---|---|---|
| 1500 000 | 14 11 | 573 77 | 573 77 | 00 | 577 35 | 3 58 | 1 75 | 39 | 570 20 |
| 19000 0 | 55 4 | 14562 7 | 4381 9 | 9 6 | 904 6 | 371 4 | 154 3 | 25 0 | 566 04 |
| 10 | 5 75 | 16 10 | 11 80 | 030 | 040 | 030 | 000 | 559 66 | 23 92 |
| 007562 | 255 | 263 | 214 | 0 | 8 | 0 | 00 | 178 95 | 202 87 |

FLOW DISTRIBUTION FOR SECNO= 1500 00 CWSEL= 573 77

| | | | | | | | | | |
|---|---|---|---|---|---|---|---|---|---|
| SECNO | DEPTH | CWSEL | CRIWS | WSELK | EG | HV | HL | OLOSS | L-BANK ELEV |
| Q | QLOB | QCH | QROB | ALOB | ACH | AROB | VOL | TWA | R-BANK ELEV |
| TIME | VLOB | VCH | VROB | XNL | XNCH | XNR | WTN | ELMIN | SSTA |
| SLOPE | XLOBL | XLCH | XLOBR | ITRIAL | IDC | ICONT | CORAR | TOPWID | ENDST |

| STA= | 24 | 29 | 107 | 121 | 141 | 169 | 200 | 203 |
|---|---|---|---|---|---|---|---|---|
| PER Q= | 3 | 76 6 | 8 8 | 7 2 | 3 6 | 3 5 | 0 | |
| AREA= | 9 6 | 904 6 | 103 6 | 105 3 | 78 6 | 81 6 | 2 3 | |
| VEL= | 5 8 | 16 1 | 16 1 | 12 9 | 8 7 | 8 2 | 3 6 | |
| DEPTH= | 1 8 | 11 7 | 7 2 | 5 2 | 2 8 | 2 6 | 9 | |

*SECNO 1600 000

7185 MINIMUM SPECIFIC ENERGY

3720 CRITICAL DEPTH ASSUMED

| | | | | | | | | | |
|---|---|---|---|---|---|---|---|---|---|
| 1600 000 | 14 23 | 578 29 | 578 29 | 00 | 582 36 | 4 08 | 1 28 | 15 | 574 40 |
| 19000 0 | 139 9 | 12204 0 | 6656 1 | 17 6 | 735 8 | 426 6 | 158 8 | 25 6 | 570 40 |
| 10 | 7 94 | 16 59 | 15 60 | 030 | 040 | 030 | 000 | 564 06 | 23 71 |
| 008596 | 143 | 151 | 176 | 0 | 5 | 0 | 00 | 146 05 | 169 75 |

FLOW DISTRIBUTION FOR SECNO= 1600 00 CWSEL= 578 29

| STA= | 24 | 32 | 99 | 108 | 121 | 131 | 142 | 148 | 154 | 169 |
|---|---|---|---|---|---|---|---|---|---|---|
| PER Q= | 7 | 64 2 | 4 5 | 6 0 | 5 9 | 7 5 | 3 7 | 3 9 | 3 5 | |
| AREA= | 17 6 | 735 8 | 55 4 | 76 6 | 68 1 | 82 2 | 40 4 | 45 2 | 58 6 | |
| VEL= | 7 9 | 16 6 | 15 5 | 14 9 | 16 5 | 17 2 | 17 2 | 16 5 | 11 4 | |
| DEPTH= | 2 1 | 11 0 | 6 5 | 5 9 | 6 8 | 7 3 | 7 2 | 6 8 | 3 8 | |

*SECNO 1700 000

3301 HV CHANGED MORE THAN HVINS

3302 WARNING CONVEYANCE CHANGE OUTSIDE OF ACCEPTABLE RANGE, KRATIO = 2 12

| | | | | | | | | | |
|---|---|---|---|---|---|---|---|---|---|
| 1700 000 | 17 41 | 581 80 | 577 13 | 00 | 583 22 | 1 42 | 59 | 27 | 575 09 |
| 19000 0 | 140 4 | 11450 5 | 7409 1 | 29 0 | 1212 7 | 755 8 | 164 9 | 26 2 | 570 00 |
| 10 | 4 84 | 9 44 | 9 80 | 030 | 040 | 030 | 000 | 564 39 | 10 55 |
| 001918 | 173 | 177 | 153 | 3 | 15 | 0 | 00 | 173 97 | 184 52 |

FLOW DISTRIBUTION FOR SECNO= 1700 00 CWSEL= 581 80

| STA= | 11 | 19 | 102 | 110 | 125 | 140 | 152 | 159 | 166 | 177 | 185 |
|---|---|---|---|---|---|---|---|---|---|---|---|
| PER Q= | 7 | 60 3 | 5 7 | 8 5 | 8 0 | 6 2 | 3 4 | 3 3 | 3 3 | 4 | |
| AREA= | 29 0 | 1212 7 | 98 9 | 154 1 | 151 3 | 118 8 | 66 1 | 67 0 | 78 6 | 21 0 | |
| VEL= | 4 8 | 9 4 | 11 0 | 10 5 | 10 1 | 9 9 | 9 9 | 9 4 | 8 1 | 3 7 | |
| DEPTH= | 3 5 | 14 6 | 11 5 | 10 7 | 10 0 | 9 8 | 9 7 | 9 0 | 7 5 | 2 7 | |

| | | | | | | | | | |
|---|---|---|---|---|---|---|---|---|---|
| SECNO | DEPTH | CWSEL | CRIWS | WSELK | EG | HV | HL | OLOSS | L-BANK ELEV |
| Q | QLOB | QCH | QROB | ALOB | ACH | AROB | VOL | TWA | R-BANK ELEV |
| TIME | VLOB | VCH | VROB | XNL | XNCH | XNR | WTN | ELMIN | SSTA |
| SLOPE | XLOBL | XLCH | XLOBR | ITRIAL | IDC | ICONT | CORAR | TOPWID | ENDST |

*SECNO 1800 000

3302 WARNING CONVEYANCE CHANGE OUTSIDE OF ACCEPTABLE RANGE, KRATIO = 68

| | | | | | | | | | |
|---|---|---|---|---|---|---|---|---|---|
| 1800 000 | 13 78 | 582 36 | 579 26 | 00 | 584 11 | 1 74 | 79 | 10 | 578 02 |
| 19000 0 | 72 1 | 16546 8 | 2381 1 | 27 9 | 1561 1 | 221 6 | 177 6 | 27 5 | 574 14 |
| 11 | 2 59 | 10 60 | 10 75 | 060 | 045 | 030 | 000 | 568 58 | 59 94 |
| 004165 | 447 | 313 | 217 | 2 | 14 | 0 | 00 | 193 50 | 253 43 |

FLOW DISTRIBUTION FOR SECNO= 1800 00 CWSEL= 582 36

| STA= | 60 | 73 | 212 | 213 | 215 | 220 | 233 | 242 | 246 | 249 | 253 |
|---|---|---|---|---|---|---|---|---|---|---|---|
| PER Q= | 4 | 87 1 | 5 | 1 3 | 2 2 | 5 8 | 2 1 | 3 | 2 | 1 | |
| AREA= | 27 9 | 1561 1 | 8 3 | 19 4 | 33 2 | 94 4 | 45 8 | 8 8 | 7 7 | 4 1 | |
| VEL= | 2 6 | 10 6 | 12 5 | 12 7 | 12 4 | 11 7 | 8 9 | 6 0 | 5 2 | 3 0 | |
| DEPTH= | 2 2 | 11 2 | 8 1 | 7 9 | 7 7 | 7 0 | 4 9 | 2 7 | 2 1 | 1 0 | |

*SECNO 1900 000

3301 HV CHANGED MORE THAN HVINS

| | | | | | | | | | |
|---|---|---|---|---|---|---|---|---|---|
| 1900 000 | 12 43 | 583 25 | 581 35 | 00 | 585 50 | 2 24 | 1 24 | 15 | 578 58 |
| 19000 0 | 252 3 | 18677 1 | 70 6 | 57 9 | 1542 3 | 11 3 | 186 9 | 28 5 | 579 93 |
| 12 | 4 36 | 12 11 | 6 26 | 060 | 045 | 030 | 000 | 570 82 | 84 79 |
| 006842 | 214 | 236 | 245 | 2 | 15 | 0 | 00 | 192 62 | 277 41 |

FLOW DISTRIBUTION FOR SECNO= 1900 00 CWSEL= 583 25

| STA= | 85 | 91 | 93 | 101 | 107 | 271 | 273 | 277 |
|---|---|---|---|---|---|---|---|---|
| PER Q= | 0 | 1 | 4 | 8 | 98 3 | 2 | 2 | |
| AREA= | 4 2 | 4 0 | 20 8 | 28 8 | 1542 3 | 4 6 | 6 6 | |
| VEL= | 1 6 | 2 8 | 3 9 | 5 3 | 12 1 | 8 5 | 4 7 | |
| DEPTH= | 7 | 1 6 | 2 7 | 4 2 | 9 4 | 3 1 | 1 4 | |

*SECNO 2000 000

3301 HV CHANGED MORE THAN HVINS

7185 MINIMUM SPECIFIC ENERGY

| | | | | | | | | | |
|---|---|---|---|---|---|---|---|---|---|
| SECNO | DEPTH | CWSEL | CRIWS | WSELK | EG | HV | HL | OLOSS | L-BANK ELEV |
| Q | QLOB | QCH | QROB | ALOB | ACH | AROB | VOL | TWA | R-BANK ELEV |
| TIME | VLOB | VCH | VROB | XNL | XNCH | XNR | WTN | ELMIN | SSTA |
| SLOPE | XLOBL | XLCH | XLOBR | ITRIAL | IDC | ICONT | CORAR | TOPWID | ENDST |

3720 CRITICAL DEPTH ASSUMED

| | | | | | | | | | |
|---|---|---|---|---|---|---|---|---|---|
| 2000 000 | 13 72 | 585 32 | 585 32 | 00 | 589 86 | 4 54 | 2 25 | 69 | 582 61 |
| 19000 0 | 52 8 | 18475 6 | 471 7 | 13 4 | 1073 1 | 37 7 | 194 5 | 29 4 | 580 10 |
| 12 | 3 93 | 17 22 | 12 53 | 060 | 045 | 030 | 000 | 571 60 | 49 67 |
| 013050 | 196 | 244 | 259 | 0 | 8 | 0 | 00 | 129 11 | 178 78 |

FLOW DISTRIBUTION FOR SECNO= 2000 00 CWSEL= 585 32

| STA= | 50 | 56 | 59 | 166 | 168 | 176 | 179 |
|---|---|---|---|---|---|---|---|
| PER Q= | 1 | 2 | 97 2 | 7 | 1 7 | 1 | |
| AREA= | 6 7 | 6 8 | 1073 1 | 8 7 | 26 2 | 2 8 | |
| VEL= | 2 8 | 5 0 | 17 2 | 16 0 | 12 2 | 4 9 | |
| DEPTH= | 1 1 | 2 4 | 10 0 | 5 0 | 3 3 | 1 0 | |

*SECNO 2100 000

7185 MINIMUM SPECIFIC ENERGY

3720 CRITICAL DEPTH ASSUMED

| | | | | | | | | | |
|---|---|---|---|---|---|---|---|---|---|
| 2100 000 | 14 37 | 588 76 | 588 76 | 00 | 593 33 | 4 56 | 2 62 | 01 | 585 86 |
| 19000 0 | 204 7 | 18600 1 | 195 2 | 44 4 | 1075 0 | 25 1 | 199 8 | 30 0 | 583 70 |
| 12 | 4 61 | 17 30 | 7 78 | 060 | 045 | 040 | 000 | 574 39 | 46 93 |
| 012667 | 193 | 204 | 211 | 0 | 8 | 0 | 00 | 137 42 | 184 34 |

FLOW DISTRIBUTION FOR SECNO= 2100 00 CWSEL= 588 76

| STA= | 47 | 54 | 64 | 68 | 69 | 173 | 174 | 182 | 184 |
|---|---|---|---|---|---|---|---|---|---|
| PER Q= | 1 | 6 | 2 | 1 | 97 9 | 2 | 8 | 0 | |
| AREA= | 8 5 | 23 4 | 9 3 | 3 1 | 1075 0 | 3 1 | 21 0 | 1 0 | |
| VEL= | 3 0 | 5 0 | 5 1 | 5 2 | 17 3 | 11 4 | 7 5 | 2 0 | |
| DEPTH= | 1 2 | 2 4 | 2 5 | 2 7 | 10 3 | 4 9 | 2 7 | 3 | |

1490 NH CARD USED

*SECNO 2200 000

7185 MINIMUM SPECIFIC ENERGY

3720 CRITICAL DEPTH ASSUMED

| | | | | | | | | | |
|---|---|---|---|---|---|---|---|---|---|
| 2200 000 | 16 32 | 594 02 | 594 02 | 00 | 598 79 | 4 77 | 2 91 | 06 | 589 80 |
| 19000 0 | 428 8 | 18453 2 | 118 0 | 49 5 | 1040 3 | 19 4 | 206 1 | 30 7 | 589 80 |
| 13 | 8 66 | 17 74 | 6 07 | 030 | 045 | 045 | 000 | 577 70 | 34 93 |
| 011182 | 245 | 245 | 261 | 0 | 8 | 0 | 00 | 120 67 | 155 60 |

| | | | | | | | | | |
|---|---|---|---|---|---|---|---|---|---|
| SECNO | DEPTH | CWSEL | CRIWS | WSELK | EG | HV | HL | OLOSS | L-BANK ELEV |
| Q | QLOB | QCH | QROB | ALOB | ACH | AROB | VOL | TWA | R-BANK ELEV |
| TIME | VLOB | VCH | VROB | XNL | XNCH | XNR | WTN | ELMIN | SSTA |
| SLOPE | XLOBL | XLCH | XLOBR | ITRIAL | IDC | ICONT | CORAR | TOPWID | ENDST |

FLOW DISTRIBUTION FOR SECNO= 2200 00 CWSEL= 594 02

| STA= | 35 | 59 | 146 | 156 |
|---|---|---|---|---|
| PER Q= | 2 3 | 97 1 | 6 | |
| AREA= | 49 5 | 1040 3 | 19 4 | |
| VEL= | 8 7 | 17 7 | 6 1 | |
| DEPTH= | 2 0 | 12 1 | 2 0 | |

1490 NH CARD USED
*SECNO 2300 000
7185 MINIMUM SPECIFIC ENERGY
3720 CRITICAL DEPTH ASSUMED

| | | | | | | | | | |
|---|---|---|---|---|---|---|---|---|---|
| 2300 000 | 16 08 | 599 29 | 599 29 | 00 | 603 77 | 4 48 | 2 16 | 03 | 589 90 |
| 19000 0 | 1538 0 | 16323 0 | 1139 0 | 135 4 | 917 5 | 113 8 | 211 7 | 31 3 | 589 93 |
| 13 | 11 36 | 17 79 | 10 00 | 033 | 045 | 045 | 000 | 583 21 | 16 58 |
| 009165 | 219 | 215 | 164 | 0 | 6 | 0 | 00 | 122 27 | 138 85 |

FLOW DISTRIBUTION FOR SECNO= 2300 00 CWSEL= 599 29

| STA= | 17 | 33 | 49 | 115 | 130 | 139 |
|---|---|---|---|---|---|---|
| PER Q= | 3 8 | 4 3 | 85 9 | 5 6 | 4 | |
| AREA= | 48 7 | 86 7 | 917 5 | 98 1 | 15 7 | |
| VEL= | 14 9 | 9 4 | 17 8 | 10 9 | 4 4 | |
| DEPTH= | 3 0 | 5 4 | 13 8 | 6 6 | 1 8 | |

1490 NH CARD USED
*SECNO 2400 000

3301 HV CHANGED MORE THAN HVINS

7185 MINIMUM SPECIFIC ENERGY
3720 CRITICAL DEPTH ASSUMED

| | | | | | | | | | |
|---|---|---|---|---|---|---|---|---|---|
| 2400 000 | 19 35 | 604 10 | 604 10 | 00 | 606 74 | 2 63 | 2 01 | 18 | 594 20 |
| 19000 0 | 5582 9 | 11934 5 | 1482 6 | 548 0 | 820 1 | 166 7 | 220 5 | 32 6 | 595 90 |
| 14 | 10 19 | 14 55 | 8 89 | 035 | 045 | 024 | 000 | 584 75 | 61 67 |
| 005764 | 393 | 266 | 131 | 0 | 14 | 0 | 00 | 290 86 | 352 53 |

FLOW DISTRIBUTION FOR SECNO= 2400 00 CWSEL= 604 10

| | | | | | | | | | |
|---|---|---|---|---|---|---|---|---|---|
| SECNO | DEPTH | CWSEL | CRIWS | WSELK | EG | HV | HL | OLOSS | L-BANK ELEV |
| Q | QLOB | QCH | QROB | ALOB | ACH | AROB | VOL | TWA | R-BANK ELEV |
| TIME | VLOB | VCH | VROB | XNL | XNCH | XNR | WTN | ELMIN | SSTA |
| SLOPE | XLOBL | XLCH | XLOBR | ITRIAL | IDC | ICONT | CORAR | TOPWID | ENDST |

| STA= | 62 | 119 | 143 | 158 | 188 | 191 | 244 | 268 | 353 |
|---|---|---|---|---|---|---|---|---|---|
| PER Q= | 5 7 | 5 3 | 3 6 | 13 3 | 1 5 | 62 8 | 5 5 | 2 3 | |
| AREA= | 117 5 | 79 6 | 76 4 | 246 8 | 27 8 | 820 1 | 97 0 | 69 7 | |
| VEL= | 9 2 | 12 7 | 9 0 | 10 2 | 10 1 | 14 6 | 10 7 | 6 3 | |
| DEPTH= | 2 0 | 3 4 | 5 1 | 8 3 | 9 1 | 15 4 | 4 0 | 8 | |

1490 NH CARD USED
*SECNO 2500 000

3301 HV CHANGED MORE THAN HVINS

3302 WARNING CONVEYANCE CHANGE OUTSIDE OF ACCEPTABLE RANGE, KRATIO = 1 65

| | | | | | | | | | |
|---|---|---|---|---|---|---|---|---|---|
| 2500 000 | 21 11 | 606 03 | 601 23 | 00 | 607 35 | 1 32 | 48 | 13 | 594 80 |
| 19000 0 | 3844 2 | 13835 0 | 1320 8 | 475 3 | 1405 4 | 328 4 | 226 7 | 33 5 | 595 74 |
| 14 | 8 09 | 9 84 | 4 02 | 030 | 045 | 036 | 000 | 584 92 | 57 94 |
| 002129 | 142 | 150 | 126 | 3 | 14 | 0 | 00 | 304 96 | 362 90 |

FLOW DISTRIBUTION FOR SECNO= 2500 00 CWSEL= 606 03

| STA= | 58 | 77 | 90 | 102 | 118 | 127 | 134 | 136 | 218 | 237 | 346 | 363 |
|---|---|---|---|---|---|---|---|---|---|---|---|---|
| PER Q= | 3 2 | 3 6 | 3 3 | 3 4 | 3 0 | 3 1 | 7 | 72 8 | 3 0 | 3 4 | 5 | |
| AREA= | 72 5 | 68 4 | 60 8 | 90 7 | 83 6 | 81 4 | 17 8 | 1405 4 | 115 3 | 190 5 | 22 6 | |
| VEL= | 8 5 | 9 9 | 10 2 | 7 1 | 6 9 | 7 3 | 7 1 | 9 8 | 5 0 | 3 4 | 4 3 | |
| DEPTH= | 3 9 | 5 0 | 5 2 | 5 7 | 9 8 | 10 4 | 10 9 | 17 1 | 6 0 | 1 8 | 1 3 | |

1490 NH CARD USED
*SECNO 2600 000

| | | | | | | | | | |
|---|---|---|---|---|---|---|---|---|---|
| 2600 000 | 20 95 | 606 32 | 601 79 | 00 | 607 65 | 1 34 | 30 | 01 | 596 21 |
| 19000 0 | 8051 2 | 10153 9 | 794 9 | 755 0 | 1219 7 | 183 1 | 234 9 | 34 6 | 595 90 |
| 15 | 10 66 | 8 33 | 4 34 | 022 | 045 | 030 | 000 | 585 37 | 29 05 |
| 001576 | 163 | 163 | 159 | 2 | 13 | 0 | 00 | 240 95 | 270 00 |

FLOW DISTRIBUTION FOR SECNO= 2600 00 CWSEL= 606 32

| STA= | 29 | 58 | 70 | 100 | 106 | 115 | 126 | 132 | 204 | 241 | 270 |
|---|---|---|---|---|---|---|---|---|---|---|---|
| PER Q= | 5 7 | 4 7 | 16 9 | 3 8 | 6 0 | 3 9 | 1 5 | 53 4 | 3 1 | 1 1 | |
| AREA= | 128 1 | 82 9 | 260 3 | 54 5 | 87 6 | 89 1 | 52 4 | 1219 7 | 134 1 | 49 1 | |
| VEL= | 8 4 | 10 7 | 12 3 | 13 1 | 13 0 | 8 2 | 5 5 | 8 3 | 4 4 | 4 1 | |
| DEPTH= | 4 4 | 7 0 | 8 6 | 9 4 | 9 2 | 8 5 | 9 1 | 16 9 | 3 6 | 1 7 | |

| | | | | | | | | | |
|---|---|---|---|---|---|---|---|---|---|
| SECNO | DEPTH | CWSEL | CRIWS | WSELK | EG | HV | HL | OLOSS | L-BANK ELEV |
| Q | QLOB | QCH | QROB | ALOB | ACH | AROB | VOL | TWA | R-BANK ELEV |
| TIME | VLOB | VCH | VROB | XNL | XNCH | XNR | WTN | ELMIN | SSTA |
| SLOPE | XLOBL | XLCH | XLOBR | ITRIAL | IDC | ICONT | CORAR | TOPWID | ENDST |

1490 NH CARD USED
*SECNO 2700 000

3265 DIVIDED FLOW

| | | | | | | | | | |
|---|---|---|---|---|---|---|---|---|---|
| 2700 000 | 21 07 | 606 47 | 601 75 | 00 | 607 91 | 1 44 | 23 | 03 | 596 57 |
| 19000 0 | 6010 2 | 11304 9 | 1684 9 | 604 6 | 1184 8 | 185 7 | 241 0 | 35 2 | 592 60 |
| 15 | 9 94 | 9 54 | 9 07 | 025 | 045 | 020 | 000 | 585 40 | 36 23 |
| 001928 | 133 | 128 | 128 | 2 | 14 | 0 | 00 | 186 70 | 305 00 |

FLOW DISTRIBUTION FOR SECNO= 2700 00 CWSEL= 606 47

| STA= | 36 | 54 | 160 | 168 | 182 | 189 | 256 | 261 | 284 | 305 |
|---|---|---|---|---|---|---|---|---|---|---|
| PER Q= | 5 7 | 13 6 | 6 4 | 4 2 | 1 8 | 59 5 | 4 6 | 3 3 | 1 0 | |
| AREA= | 99 7 | 241 1 | 78 1 | 127 3 | 58 4 | 1184 8 | 60 7 | 84 9 | 40 1 | |
| VEL= | 10 9 | 10 7 | 15 5 | 6 2 | 5 8 | 9 5 | 14 2 | 7 4 | 4 8 | |
| DEPTH= | 5 8 | 2 3 | 10 4 | 9 0 | 8 5 | 17 7 | 11 9 | 3 7 | 1 9 | |

1490 NH CARD USED
*SECNO 2800 000

3265 DIVIDED FLOW

3301 HV CHANGED MORE THAN HVINS

3302 WARNING CONVEYANCE CHANGE OUTSIDE OF ACCEPTABLE RANGE, KRATIO = 1 75

| | | | | | | | | | |
|---|---|---|---|---|---|---|---|---|---|
| 2800 000 | 22 46 | 607 41 | 601 21 | 00 | 608 14 | 73 | 15 | 07 | 598 68 |
| 19000 0 | 10529 8 | 5886 0 | 2584 2 | 1323 0 | 1118 6 | 534 1 | 249 9 | 36 2 | 595 43 |
| 16 | 7 96 | 5 26 | 4 84 | 020 | 045 | 021 | 000 | 584 95 | 20 87 |
| 000628 | 105 | 187 | 190 | 2 | 17 | 0 | 00 | 349 00 | 432 51 |

FLOW DISTRIBUTION FOR SECNO= 2800 00 CWSEL= 607 41

| | | | | | | | | | |
|---|---|---|---|---|---|---|---|---|---|
| SECNO | DEPTH | CWSEL | CRIWS | WSELK | EG | HV | HL | OLOSS | L-BANK ELEV |
| Q | QLOB | QCH | QROB | ALOB | ACH | AROB | VOL | TWA | R-BANK ELEV |
| TIME | VLOB | VCH | VROB | XNL | XNCH | XNR | WTN | ELMIN | SSTA |
| SLOPE | XLOBL | XLCH | XLOBR | ITRIAL | IDC | ICONT | CORAR | TOPWID | ENDST |

| STA= | 21 | 50 | 142 | 155 | 174 | 198 | 208 | 221 | 224 | 287 | 311 | 347 | 384 |
|---|---|---|---|---|---|---|---|---|---|---|---|---|---|
| PER Q= | 4 6 | 11 4 | 5 9 | 9 5 | 12 2 | 5 3 | 5 8 | 7 | 31 0 | 3 4 | 5 6 | 3 7 | |
| AREA= | 163 4 | 300 4 | 127 7 | 203 3 | 257 7 | 108 9 | 126 3 | 35 2 | 1118 6 | 150 0 | 178 0 | 140 2 | |
| VEL= | 5 3 | 7 2 | 8 8 | 8 9 | 9 0 | 9 2 | 8 8 | 3 6 | 5 3 | 4 3 | 5 9 | 5 0 | |
| DEPTH= | 5 5 | 3 3 | 10 3 | 10 4 | 10 7 | 11 1 | 10 3 | 9 0 | 17 8 | 6 4 | 4 9 | 3 8 | |

| STA= | 384 | 433 |
|---|---|---|
| PER Q= | 9 | |
| AREA= | 65 9 | |
| VEL= | 2 7 | |
| DEPTH= | 1 4 | |

1490 NH CARD USED
*SECNO 2830 000

3265 DIVIDED FLOW

| | | | | | | | | | |
|---|---|---|---|---|---|---|---|---|---|
| 2830 000 | 22 79 | 607 69 | 600 31 | 00 | 608 20 | 50 | 04 | 02 | 598 43 |
| 19000 0 | 9174 3 | 8403 1 | 1422 6 | 1345 5 | 1848 6 | 447 2 | 255 5 | 36 8 | 596 10 |
| 16 | 6 82 | 4 55 | 3 18 | 021 | 045 | 035 | 000 | 584 90 | 16 00 |
| 000480 | 27 | 100 | 130 | 2 | 18 | 0 | 00 | 343 56 | 424 64 |

FLOW DISTRIBUTION FOR SECNO= 2830 00 CWSEL= 607 69

| STA= | 16 | 49 | 152 | 179 | 208 | 216 | 228 | 229 | 342 | 381 | 406 | 425 |
|---|---|---|---|---|---|---|---|---|---|---|---|---|
| PER Q= | 5 3 | 9 8 | 11 9 | 13 5 | 4 0 | 3 6 | 2 | 44 2 | 4 1 | 3 1 | 3 | |
| AREA= | 189 6 | 324 7 | 285 3 | 318 3 | 92 1 | 126 2 | 9 3 | 1848 6 | 285 1 | 128 4 | 33 7 | |
| VEL= | 5 3 | 5 8 | 7 9 | 8 1 | 8 3 | 5 4 | 3 2 | 4 5 | 2 7 | 4 5 | 1 7 | |
| DEPTH= | 5 7 | 3 2 | 10 7 | 11 0 | 11 4 | 10 2 | 9 3 | 16 4 | 7 4 | 5 0 | 1 9 | |

1490 NH CARD USED
*SECNO 2860 000

3265 DIVIDED FLOW

| | | | | | | | | | |
|---|---|---|---|---|---|---|---|---|---|
| 2860 000 | 19 95 | 607 75 | 600 12 | 00 | 608 21 | 46 | 01 | 00 | 595 98 |
| 19000 0 | 9324 9 | 8017 9 | 1657 2 | 1419 0 | 1877 1 | 544 9 | 257 4 | 37 0 | 595 98 |
| 16 | 6 57 | 4 27 | 3 04 | 020 | 045 | 034 | 000 | 587 80 | 16 41 |
| 000412 | 24 | 17 | 29 | 2 | 11 | 0 | 00 | 349 88 | 429 30 |

| | | | | | | | | | |
|---|---|---|---|---|---|---|---|---|---|
| SECNO | DEPTH | CWSEL | CRIWS | WSELK | EG | HV | HL | OLOSS | L-BANK ELEV |
| Q | QLOB | QCH | QROB | ALOB | ACH | AROB | VOL | TWA | R-BANK ELEV |
| TIME | VLOB | VCH | VROB | XNL | XNCH | XNR | WTN | ELMIN | SSTA |
| SLOPE | XLOBL | XLCH | XLOBR | ITRIAL | IDC | ICONT | CORAR | TOPWID | ENDST |

FLOW DISTRIBUTION FOR SECNO= 2860 00 CWSEL= 607 75

| STA= | 16 | 49 | 80 | 156 | 177 | 199 | 211 | 221 | 221 | 336 | 374 | 413 | 429 |
|---|---|---|---|---|---|---|---|---|---|---|---|---|---|
| PER Q= | 7 7 | 9 6 | 3 4 | 9 1 | 9 4 | 5 1 | 4 7 | 1 | 42 2 | 4 0 | 4 3 | 4 | |
| AREA= | 246 5 | 314 9 | 132 4 | 235 9 | 239 4 | 128 9 | 115 8 | 5 1 | 1877 1 | 291 5 | 214 1 | 39 4 | |
| VEL= | 5 9 | 5 8 | 4 8 | 7 4 | 7 4 | 7 6 | 7 7 | 3 5 | 4 3 | 2 6 | 3 8 | 2 0 | |
| DEPTH= | 7 7 | 10 0 | 1 8 | 10 8 | 10 9 | 11 2 | 11 5 | 11 8 | 16 4 | 7 6 | 5 5 | 2 4 | |

1490 NH CARD USED

*SECNO 2890 000

| | | | | | | | | | |
|---|---|---|---|---|---|---|---|---|---|
| 2890 000 | 19 38 | 607 84 | 601 09 | 00 | 608 28 | 43 | 06 | 00 | 595 81 |
| 19000 0 | 5453 6 | 8876 8 | 4669 6 | 1016 7 | 1934 3 | 739 3 | 270 5 | 38 2 | 595 84 |
| 17 | 5 36 | 4 59 | 6 32 | 025 | 045 | 020 | 000 | 588 46 | 55 17 |
| 000448 | 135 | 149 | 192 | 2 | 16 | 0 | 00 | 348 90 | 404 07 |

FLOW DISTRIBUTION FOR SECNO= 2890 00 CWSEL= 607 84

| STA= | 55 | 96 | 112 | 125 | 147 | 177 | 290 | 297 | 341 | 363 | 404 |
|---|---|---|---|---|---|---|---|---|---|---|---|
| PER Q= | 8 4 | 5 4 | 4 3 | 6 0 | 4 6 | 46 7 | 3 1 | 15 3 | 4 3 | 1 8 | |
| AREA= | 288 8 | 147 1 | 120 7 | 176 7 | 283 4 | 1934 3 | 74 8 | 415 8 | 145 8 | 102 9 | |
| VEL= | 5 6 | 7 0 | 6 8 | 6 4 | 3 1 | 4 6 | 7 9 | 7 0 | 5 7 | 3 3 | |
| DEPTH= | 7 1 | 9 4 | 8 9 | 8 2 | 9 2 | 17 1 | 11 5 | 9 4 | 6 8 | 2 5 | |

1490 NH CARD USED

*SECNO 2900 000

| | | | | | | | | | |
|---|---|---|---|---|---|---|---|---|---|
| 2900 000 | 19 33 | 607 83 | 601 22 | 00 | 608 31 | 49 | 02 | 02 | 596 44 |
| 19000 0 | 3342 9 | 9336 2 | 6320 9 | 620 2 | 1951 1 | 943 5 | 273 9 | 38 6 | 596 00 |
| 17 | 5 39 | 4 79 | 6 70 | 023 | 045 | 020 | 000 | 588 50 | 62 93 |
| 000494 | 53 | 35 | 43 | 2 | 14 | 0 | 00 | 332 46 | 395 39 |

FLOW DISTRIBUTION FOR SECNO= 2900 00 CWSEL= 607 83

| STA= | 63 | 95 | 112 | 143 | 154 | 269 | 291 | 317 | 337 | 357 | 379 | 395 |
|---|---|---|---|---|---|---|---|---|---|---|---|---|
| PER Q= | 4 7 | 3 8 | 7 4 | 1 6 | 49 1 | 9 7 | 9 5 | 5 7 | 4 8 | 3 2 | 5 | |
| AREA= | 172 4 | 119 3 | 228 9 | 99 7 | 1951 1 | 231 0 | 246 0 | 159 8 | 148 0 | 117 5 | 41 2 | |
| VEL= | 5 2 | 6 0 | 6 2 | 3 1 | 4 8 | 8 0 | 7 3 | 6 7 | 6 1 | 5 1 | 2 2 | |
| DEPTH= | 5 4 | 7 0 | 7 2 | 9 4 | 17 0 | 10 7 | 9 3 | 8 2 | 7 2 | 5 5 | 2 4 | |

| | | | | | | | | | |
|---|---|---|---|---|---|---|---|---|---|
| SECNO | DEPTH | CWSEL | CRIWS | WSELK | EG | HV | HL | OLOSS | L-BANK ELEV |
| Q | QLOB | QCH | QROB | ALOB | ACH | AROB | VOL | TWA | R-BANK ELEV |
| TIME | VLOB | VCH | VROB | XNL | XNCH | XNR | WTN | ELMIN | SSTA |
| SLOPE | XLOBL | XLCH | XLOBR | ITRIAL | IDC | ICONT | CORAR | TOPWID | ENDST |

*SECNO 3000 000

3302 WARNING CONVEYANCE CHANGE OUTSIDE OF ACCEPTABLE RANGE, KRATIO = 69

| | | | | | | | | | |
|---|---|---|---|---|---|---|---|---|---|
| 3000 000 | 18 85 | 607 95 | 601 45 | 00 | 608 48 | 53 | 16 | 01 | 597 72 |
| 19000 0 | 1021 0 | 9351 4 | 8627 6 | 258 0 | 1403 9 | 1715 9 | 291 9 | 40 2 | 596 00 |
| 18 | 3 96 | 6 66 | 5 03 | 045 | 045 | 045 | 000 | 589 10 | 18 60 |
| 001036 | 205 | 228 | 234 | 2 | 14 | 0 | 00 | 299 45 | 318 05 |

FLOW DISTRIBUTION FOR SECNO= 3000 00 CWSEL= 607 95

| STA= | 19 | 53 | 60 | 145 | 187 | 222 | 232 | 253 | 284 | 307 | 318 |
|---|---|---|---|---|---|---|---|---|---|---|---|
| PER Q= | 3 7 | 1 7 | 49 2 | 14 4 | 11 3 | 3 1 | 5 7 | 7 1 | 3 1 | 7 | |
| AREA= | 190 9 | 67 1 | 1403 9 | 496 5 | 398 2 | 114 0 | 213 8 | 287 3 | 155 3 | 50 7 | |
| VEL= | 3 7 | 4 7 | 6 7 | 5 5 | 5 4 | 5 2 | 5 1 | 4 7 | 3 7 | 2 5 | |
| DEPTH= | 5 6 | 9 6 | 16 5 | 11 8 | 11 4 | 10 9 | 10 5 | 9 3 | 6 6 | 4 7 | |

*SECNO 3100 000

3302 WARNING CONVEYANCE CHANGE OUTSIDE OF ACCEPTABLE RANGE, KRATIO = 1 58

3470 ENCROACHMENT STATIONS= 119 0 658 0 TYPE= 1 TARGET= 539 050

| | | | | | | | | | |
|---|---|---|---|---|---|---|---|---|---|
| 3100 000 | 18 77 | 608 37 | 598 91 | 00 | 608 60 | 23 | 09 | 03 | 599 90 |
| 19000 0 | 959 5 | 13804 1 | 4236 4 | 487 2 | 3315 4 | 1320 0 | 306 4 | 41 6 | 594 00 |
| 19 | 1 97 | 4 16 | 3 21 | 045 | 045 | 045 | 000 | 589 60 | 119 00 |
| 000414 | 278 | 177 | 73 | 2 | 8 | 0 | 00 | 467 00 | 586 00 |

FLOW DISTRIBUTION FOR SECNO= 3100 00 CWSEL= 608 37

| STA= | 119 | 237 | 243 | 457 | 479 | 503 | 528 | 549 | 586 |
|---|---|---|---|---|---|---|---|---|---|
| PER Q= | 4 4 | 6 | 72 7 | 6 1 | 5 2 | 4 4 | 3 0 | 3 6 | |
| AREA= | 439 8 | 47 3 | 3315 4 | 303 2 | 280 3 | 264 0 | 194 3 | 278 3 | |
| VEL= | 1 9 | 2 6 | 4 2 | 3 8 | 3 5 | 3 2 | 2 9 | 2 4 | |
| DEPTH= | 3 7 | 7 8 | 15 5 | 13 6 | 12 0 | 10 3 | 9 2 | 7 6 | |

*SECNO 3200 000

| | | | | | | | | | |
|---|---|---|---|---|---|---|---|---|---|
| SECNO | DEPTH | CWSEL | CRIWS | WSELK | EG | HV | HL | OLOSS | L-BANK ELEV |
| Q | QLOB | QCH | QROB | ALOB | ACH | AROB | VOL | TWA | R-BANK ELEV |
| TIME | VLOB | VCH | VROB | XNL | XNCH | XNR | WTN | ELMIN | SSTA |
| SLOPE | XLOBL | XLCH | XLOBR | ITRIAL | IDC | ICONT | CORAR | TOPWID | ENDST |

3302 WARNING CONVEYANCE CHANGE OUTSIDE OF ACCEPTABLE RANGE, KRATIO = 60

| | | | | | | | | | |
|---|---|---|---|---|---|---|---|---|---|
| 3200 000 | 18 58 | 608 29 | 601 10 | 00 | 608 91 | 63 | 19 | 12 | 600 10 |
| 19000 0 | 888 9 | 13421 8 | 4689 3 | 249 8 | 1968 6 | 889 0 | 334 2 | 44 2 | 593 89 |
| 21 | 3 56 | 6 82 | 5 27 | 045 | 045 | 045 | 000 | 589 71 | 41 32 |
| 001159 | 350 | 308 | 244 | 2 | 14 | 0 | 00 | 287 05 | 328 37 |

FLOW DISTRIBUTION FOR SECNO= 3200 00 CWSEL= 608 29

| STA= | 41 | 66 | 82 | 87 | 93 | 223 | 247 | 258 | 261 | 297 | 328 |
|---|---|---|---|---|---|---|---|---|---|---|---|
| PER Q= | 7 | 2'0 | 8 | 1 2 | 70 6 | 10 6 | 4 0 | 1 4 | 7 6 | 1 0 | |
| AREA= | 62 0 | 101 4 | 35 9 | 50 5 | 1968 6 | 318 1 | 128 1 | 45 0 | 310 0 | 87 9 | |
| VEL= | 2 1 | 3 8 | 4 3 | 4 5 | 6 8 | 6 3 | 6 0 | 5 8 | 4 7 | 2 2 | |
| DEPTH= | 2 5 | 6 2 | 7 5 | 7 9 | 15 1 | 13 4 | 12 3 | 11 9 | 8 6 | 2 8 | |

*SECNO 3300 000

3301 HV CHANGED MORE THAN HVINS

3302 WARNING CONVEYANCE CHANGE OUTSIDE OF ACCEPTABLE RANGE, KRATIO = 65

| | | | | | | | | | |
|---|---|---|---|---|---|---|---|---|---|
| 3300 000 | 18 34 | 608 07 | 603 69 | 00 | 609 44 | 1 36 | 30 | 22 | 600 48 |
| 19000 0 | 1087 0 | 16020 9 | 1892 1 | 230 1 | 1614 5 | 317 8 | 344 8 | 45 2 | 597 46 |
| 21 | 4 72 | 9 92 | 5 95 | 045 | 045 | 045 | 000 | 589 73 | 74 99 |
| 002748 | 153 | 187 | 148 | 2 | 19 | 0 | 00 | 234 47 | 309 46 |

FLOW DISTRIBUTION FOR SECNO= 3300 00 CWSEL= 608 07

| STA= | 75 | 89 | 133 | 249 | 274 | 306 | 309 |
|---|---|---|---|---|---|---|---|
| PER Q= | 1 | 5 6 | 84 3 | 7 8 | 2 2 | 0 | |
| AREA= | 13 8 | 216 2 | 1614 5 | 208 6 | 108 0 | 1 1 | |
| VEL= | 1 7 | 4 9 | 9 9 | 7 1 | 3 9 | 8 | |
| DEPTH= | 1 0 | 4 8 | 13 9 | 8 4 | 3 4 | 3 | |

*SECNO 3400 000

| | | | | | | | | | |
|---|---|---|---|---|---|---|---|---|---|
| SECNO | DEPTH | CWSEL | CRIWS | WSELK | EG | HV | HL | OLOSS | L-BANK ELEV |
| Q | QLOB | QCH | QROB | ALOB | ACH | AROB | VOL | TWA | R-BANK ELEV |
| TIME | VLOB | VCH | VROB | XNL | XNCH | XNR | WTN | ELMIN | SSTA |
| SLOPE | XLOBL | XLCH | XLOBR | ITRIAL | IDC | ICONT | CORAR | TOPWID | ENDST |

3301 HV CHANGED MORE THAN HVINS

3302 WARNING CONVEYANCE CHANGE OUTSIDE OF ACCEPTABLE RANGE, KRATIO = 1 54

| | | | | | | | | | |
|---|---|---|---|---|---|---|---|---|---|
| 3400 000 | 19 57 | 609 27 | 603 05 | 00 | 609 82 | 55 | 30 | 08 | 599 87 |
| 19000 0 | 3690 0 | 14653 1 | 657 0 | 956 1 | 2274 2 | 188 0 | 356 7 | 46 6 | 599 85 |
| 22 | 3 86 | 6 44 | 3 50 | 045 | 045 | 045 | 000 | 589 70 | 119 46 |
| 001157 | 254 | 167 | 163 | 2 | 19 | 0 | 00 | 394 41 | 513 87 |

FLOW DISTRIBUTION FOR SECNO= 3400 00 CWSEL= 609 27

| STA= | 119 | 215 | 261 | 282 | 307 | 469 | 495 | 514 |
|---|---|---|---|---|---|---|---|---|
| PER Q= | 3 7 | 6 2 | 3 7 | 5 8 | 77 1 | 3 2 | 2 | |
| AREA= | 267 4 | 299 9 | 161 5 | 227 2 | 2274 2 | 159 9 | 28 1 | |
| VEL= | 2 7 | 3 9 | 4 4 | 4 8 | 6 4 | 3 8 | 1 7 | |
| DEPTH= | 2 8 | 6 5 | 7 8 | 8 9 | 14 0 | 6 2 | 1 5 | |

*SECNO 3500 000

| | | | | | | | | | |
|---|---|---|---|---|---|---|---|---|---|
| 3500 000 | 20 53 | 609 33 | 601 30 | 00 | 610 08 | 75 | 20 | 06 | 598 95 |
| 19000 0 | 923 4 | 17336 7 | 739 9 | 253 5 | 2410 0 | 199 3 | 369 1 | 48 0 | 600 20 |
| 23 | 3 64 | 7 19 | 3 71 | 045 | 045 | 045 | 000 | 588 80 | 95 23 |
| 001204 | 253 | 155 | 129 | 2 | 14 | 0 | 00 | 252 00 | 347 23 |

FLOW DISTRIBUTION FOR SECNO= 3500 00 CWSEL= 609 33

| STA= | 95 | 155 | 306 | 325 | 347 |
|---|---|---|---|---|---|
| PER Q= | 4 9 | 91 2 | 3 0 | 8 | |
| AREA= | 253 5 | 2410 0 | 136 7 | 62 6 | |
| VEL= | 3 6 | 7 2 | 4 2 | 2 6 | |
| DEPTH= | 4 3 | 15 9 | 7 1 | 2 8 | |

*SECNO 3600 000

| | | | | | | | | | |
|---|---|---|---|---|---|---|---|---|---|
| 3600 000 | 20 20 | 609 34 | 601 72 | 00 | 610 50 | 1 16 | 30 | 12 | 600 40 |
| 19000 0 | 374 9 | 18321 9 | 303 2 | 96 1 | 2084 8 | 87 0 | 381 2 | 49 0 | 600 56 |
| 23 | 3 90 | 8 79 | 3 48 | 045 | 045 | 045 | 000 | 589 14 | 215 71 |
| 001747 | 183 | 207 | 221 | 2 | 14 | 0 | 00 | 167 91 | 383 62 |

| | | | | | | | | | |
|---|---|---|---|---|---|---|---|---|---|
| SECNO | DEPTH | CWSEL | CRIWS | WSELK | EG | HV | HL | OLOSS | L-BANK ELEV |
| Q | QLOB | QCH | QROB | ALOB | ACH | AROB | VOL | TWA | R-BANK ELEV |
| TIME | VLOB | VCH | VROB | XNL | XNCH | XNR | WTN | ELMIN | SSTA |
| SLOPE | XLOBL | XLCH | XLOBR | ITRIAL | IDC | ICONT | CORAR | TOPWID | ENDST |

FLOW DISTRIBUTION FOR SECNO= 3600 00 CWSEL= 609 34

| STA= | 216 | 232 | 237 | 364 | 384 |
|---|---|---|---|---|---|
| PER Q= | 9 | 1 1 | 96 4 | 1 6 | |
| AREA= | 56 4 | 39 7 | 2084 8 | 87 0 | |
| VEL= | 3 0 | 5 2 | 8 8 | 3 5 | |
| DEPTH= | 3 4 | 7 9 | 16 5 | 4 4 | |

*SECNO 3700 000

3265 DIVIDED FLOW

3301 HV CHANGED MORE THAN HVINS

| | | | | | | | | | |
|---|---|---|---|---|---|---|---|---|---|
| 3700 000 | 20 07 | 610 36 | 601 51 | 00 | 610 98 | 62 | 43 | 05 | 604 12 |
| 19000 0 | 155 8 | 17117 3 | 1726 9 | 71 3 | 2608 2 | 511 4 | 402 5 | 50 9 | 600 63 |
| 25 | 2 19 | 6 56 | 3 38 | 045 | 045 | 045 | 000 | 590 29 | 97 69 |
| 000983 | 201 | 330 | 450 | 2 | 11 | 0 | 00 | 326 37 | 505 61 |

FLOW DISTRIBUTION FOR SECNO= 3700 00 CWSEL= 610 36

| STA= | 98 | 239 | 400 | 427 | 461 | 506 |
|---|---|---|---|---|---|---|
| PER Q= | 8 | 90 1 | 4 7 | 3 2 | 1 2 | |
| AREA= | 71 2 | 2608 2 | 217 8 | 186 0 | 107 6 | |
| VEL= | 2 2 | 6 6 | 4 1 | 3 2 | 2 1 | |
| DEPTH= | 5 | 16 2 | 8 0 | 5 5 | 2 4 | |

*SECNO 3800 000

| | | | | | | | | | |
|---|---|---|---|---|---|---|---|---|---|
| 3800 000 | 19 21 | 610 88 | 601 34 | 00 | 611 21 | 33 | 20 | 03 | 603 87 |
| 19000 0 | 1154 0 | 16929 7 | 916 3 | 503 9 | 3528 5 | 356 9 | 426 8 | 53 5 | 600 40 |
| 26 | 2 29 | 4 80 | 2 57 | 045 | 045 | 045 | 000 | 591 67 | 61 89 |
| 000568 | 160 | 260 | 499 | 2 | 11 | 0 | 00 | 430 33 | 492 22 |

FLOW DISTRIBUTION FOR SECNO= 3800 00 CWSEL= 610 88

| STA= | 62 | 146 | 175 | 408 | 448 | 492 |
|---|---|---|---|---|---|---|
| PER Q= | 3 9 | 2 2 | 89 1 | 4 2 | 6 | |
| AREA= | 338 7 | 165 1 | 3528 5 | 274 9 | 82 0 | |
| VEL= | 2 2 | 2 5 | 4 8 | 2 9 | 1 3 | |
| DEPTH= | 4 0 | 5 7 | 15 1 | 7 0 | 1 8 | |

| | | | | | | | | | |
|---|---|---|---|---|---|---|---|---|---|
| SECNO | DEPTH | CWSEL | CRIWS | WSELK | EG | HV | HL | OLOSS | L-BANK ELEV |
| Q | QLOB | QCH | QROB | ALOB | ACH | AROB | VOL | TWA | R-BANK ELEV |
| TIME | VLOB | VCH | VROB | XNL | XNCH | XNR | WTN | ELMIN | SSTA |
| SLOPE | XLOBL | XLCH | XLOBR | ITRIAL | IDC | ICONT | CORAR | TOPWID | ENDST |

*SECNO 4000 000

| | | | | | | | | | |
|---|---|---|---|---|---|---|---|---|---|
| 4000 000 | 17 72 | 611 10 | 601 88 | 00 | 611 54 | 44 | 29 | 03 | 603 96 |
| 19000 0 | 180 9 | 18799 0 | 20 1 | 89 3 | 3503 8 | 16 1 | 468 0 | 57 2 | 607 40 |
| 29 | 2 02 | 5 37 | 1 25 | 045 | 045 | 045 | 000 | 593 38 | 78 32 |
| 000746 | 350 | 452 | 549 | 2 | 14 | 0 | 00 | 291 35 | 369 67 |

FLOW DISTRIBUTION FOR SECNO= 4000 00 CWSEL= 611 10

| | | | | |
|---|---|---|---|---|
| STA= | 78 | 122 | 359 | 370 |
| PER Q= | 1 0 | 98 9 | 1 | |
| AREA= | 89 3 | 3503 8 | 16 1 | |
| VEL= | 2 0 | 5 4 | 1 2 | |
| DEPTH= | 2 1 | 14 8 | 1 5 | |

THIS RUN EXECUTED 05MAY05 08 02 02

**********
HEC-2 WATER SURFACE PROFILES

Version 4 6 2, May 1991
**********

NOTE- ASTERISK (*) AT LEFT OF CROSS-SECTION NUMBER INDICATES MESSAGE IN SUMMARY OF ERRORS LIST

AME 14312BCC HC2

SUMMARY PRINTOUT

| | SECNO | Q | CWSEL | CRIWS | CUMDS |
|---|---|---|---|---|---|
| | 100 000 | 19000 00 | 559 00 | 556 19 | 00 |
| | 200 000 | 19000 00 | 559 72 | 555 39 | 118 00 |
| * | 400 000 | 19000 00 | 559 45 | 557 48 | 302 00 |
| | 500 000 | 19000 00 | 560 52 | 557 63 | 462 00 |
| * | 600 000 | 19000 00 | 560 43 | 560 43 | 627 00 |
| * | 700 000 | 19000 00 | 563 25 | 561 13 | 880 00 |
| | 800 000 | 19000 00 | 563 63 | 561 77 | 1139 00 |
| | 900 000 | 19000 00 | 564 18 | 560 72 | 1501 00 |
| | 990 000 | 19000 00 | 564 25 | 560 90 | 1742 00 |
| | 1000 000 | 19000 00 | 565 56 | 561 73 | 1985 00 |
| * | 1100 000 | 19000 00 | 566 07 | 565 51 | 2364 00 |
| * | 1150 000 | 19000 00 | 568 23 | 566 43 | 2587 00 |
| | 1175 000 | 19000 00 | 568 85 | 564 49 | 2702 00 |
| | 1200 000 | 19000 00 | 568 71 | 566 77 | 2732 00 |
| * | 1225 000 | 18740 00 | 568 61 | 568 61 | 2737 00 |
| * | 1250 000 | 18740 00 | 569 74 | 568 65 | 2757 00 |
| * | 1300 000 | 19000 00 | 570 32 | 568 16 | 2762 00 |

| | SECNO | Q | CWSEL | CRIWS | CUMDS |
|---|---|---|---|---|---|
| * | 1350 000 | 19000 00 | 570 95 | 570 95 | 2873 00 |
| * | 1400 000 | 19000 00 | 572 75 | 572 75 | 3022 00 |
| * | 1500 000 | 19000 00 | 573 77 | 573 77 | 3285 00 |
| * | 1600 000 | 19000 00 | 578 29 | 578 29 | 3436 00 |
| * | 1700 000 | 19000 00 | 581 80 | 577 13 | 3613 00 |
| * | 1800 000 | 19000 00 | 582 36 | 579 26 | 3926 00 |
| | 1900 000 | 19000 00 | 583 25 | 581 35 | 4162 00 |
| * | 2000 000 | 19000 00 | 585 32 | 585 32 | 4406 00 |
| * | 2100 000 | 19000 00 | 588 76 | 588 76 | 4610 00 |
| * | 2200 000 | 19000 00 | 594 02 | 594 02 | 4855 00 |
| * | 2300 000 | 19000 00 | 599 29 | 599 29 | 5070 00 |
| * | 2400 000 | 19000 00 | 604 10 | 604 10 | 5336 00 |
| * | 2500 000 | 19000 00 | 606 03 | 601 23 | 5486 00 |
| | 2600 000 | 19000 00 | 606 32 | 601 79 | 5649 00 |
| | 2700 000 | 19000 00 | 606 47 | 601 75 | 5777 00 |
| * | 2800 000 | 19000 00 | 607 41 | 601 21 | 5964 00 |
| | 2830 000 | 19000 00 | 607 69 | 600 31 | 6064 00 |
| | 2860 000 | 19000 00 | 607 75 | 600 12 | 6081 00 |
| | 2890 000 | 19000 00 | 607 84 | 601 09 | 6230 00 |
| | 2900 000 | 19000 00 | 607 83 | 601 22 | 6265 00 |
| * | 3000 000 | 19000 00 | 607 95 | 601 45 | 6493 00 |
| * | 3100 000 | 19000 00 | 608 37 | 598 91 | 6670 00 |
| * | 3200 000 | 19000 00 | 608 29 | 601 10 | 6978 00 |
| * | 3300 000 | 19000 00 | 608 07 | 603 69 | 7165 00 |
| * | 3400 000 | 19000 00 | 609 27 | 603 05 | 7332 00 |
| | 3500 000 | 19000 00 | 609 33 | 601 30 | 7487 00 |

| SECNO | Q | CWSEL | CRIWS | CUMDS |
|---|---|---|---|---|
| 3600 000 | 19000 00 | 609 34 | 601 72 | 7694 00 |
| 3700 000 | 19000 00 | 610 36 | 601 51 | 8024 00 |
| 3800 000 | 19000 00 | 610 88 | 601 34 | 8284 00 |
| 4000 000 | 19000 00 | 611 10 | 601 88 | 8736 00 |

AME 14312BCC HC2

SUMMARY PRINTOUT TABLE 150

| | SECNO | XLCH | ELTRD | ELLC | ELMIN | Q | CWSEL | CRIWS | EG | 10*KS | VCH | AREA | 01K |
|---|---|---|---|---|---|---|---|---|---|---|---|---|---|
| | 100 000 | 00 | 00 | 00 | 541 50 | 19000 00 | 559 00 | 556 19 | 560 33 | 25 64 | 11 12 | 2394 02 | 3752 0 |
| | 200 000 | 118 00 | 00 | 00 | 541 70 | 19000 00 | 559 72 | 555 39 | 560 55 | 17 09 | 9 10 | 2789 38 | 4596 2 |
| * | 400 000 | 184 00 | 00 | 00 | 542 80 | 19000 00 | 559 45 | 557 48 | 561 16 | 39 63 | 13 35 | 2062 37 | 3018 0 |
| | 500 000 | 160 00 | 00 | 00 | 543 31 | 19000 00 | 560 52 | 557 63 | 561 62 | 21 22 | 8 86 | 2267 31 | 4124 8 |
| * | 600 000 | 165 00 | 00 | 00 | 546 60 | 19000 00 | 560 43 | 560 43 | 563 00 | 68 49 | 14 00 | 1499 33 | 2295 9 |
| * | 700 000 | 253 00 | 00 | 00 | 548 10 | 19000 00 | 563 25 | 561 13 | 563 95 | 17 74 | 7 57 | 2865 54 | 4510 8 |
| | 800 000 | 259 00 | 00 | 00 | 548 13 | 19000 00 | 563 63 | 561 77 | 564 39 | 18 20 | 7 91 | 2867 75 | 4453 5 |
| | 900 000 | 362 00 | 00 | 00 | 548 20 | 19000 00 | 564 18 | 560 72 | 565 05 | 20 09 | 8 15 | 2593 61 | 4239 2 |
| | 990 000 | 241 00 | 00 | 00 | 549 53 | 19000 00 | 564 25 | 560 90 | 565 91 | 35 90 | 10 59 | 1876 43 | 3171 2 |
| | 1000 000 | 243 00 | 00 | 00 | 549 99 | 19000 00 | 565 56 | 561 73 | 566 57 | 21 01 | 8 33 | 2387 22 | 4145 1 |
| * | 1100 000 | 379 00 | 00 | 00 | 552 20 | 19000 00 | 566 07 | 565 51 | 568 13 | 60 62 | 12 70 | 1694 67 | 2440 3 |
| * | 1150 000 | 223 00 | 00 | 00 | 552 18 | 19000 00 | 568 23 | 566 43 | 569 40 | 28 99 | 9 55 | 2247 60 | 3529 0 |
| | 1175 000 | 115 00 | 00 | 00 | 553 25 | 19000 00 | 568 85 | 564 49 | 569 76 | 20 60 | 8 16 | 2558 46 | 4186 3 |
| | 1200 000 | 30 00 | 00 | 00 | 557 60 | 19000 00 | 568 71 | 566 77 | 570 05 | 33 94 | 9 93 | 2193 43 | 3261 3 |
| * | 1225 000 | 5 00 | 00 | 00 | 562 04 | 18740 00 | 568 61 | 568 61 | 570 84 | 21 65 | 12 98 | 1617 89 | 4027 6 |
| * | 1250 000 | 20 00 | 00 | 00 | 562 07 | 18740 00 | 569 74 | 568 65 | 571 13 | 11 02 | 10 35 | 2060 68 | 5646 3 |
| * | 1300 000 | 5 00 | 00 | 00 | 559 68 | 19000 00 | 570 32 | 568 16 | 571 27 | 25 99 | 8 20 | 2460 92 | 3727 1 |
| * | 1350 000 | 111 00 | 00 | 00 | 559 68 | 19000 00 | 570 95 | 570 95 | 573 00 | 61 17 | 12 50 | 1751 73 | 2429 2 |
| * | 1400 000 | 149 00 | 00 | 00 | 559 40 | 19000 00 | 572 75 | 572 75 | 575 03 | 64 08 | 14 04 | 1665 48 | 2373 4 |
| * | 1500 000 | 263 00 | 00 | 00 | 559 66 | 19000 00 | 573 77 | 573 77 | 577 35 | 75 62 | 16 10 | 1285 60 | 2184 8 |
| * | 1600 000 | 151 00 | 00 | 00 | 564 06 | 19000 00 | 578 29 | 578 29 | 582 36 | 85 96 | 16 59 | 1180 02 | 2049 2 |
| * | 1700 000 | 177 00 | 00 | 00 | 564 39 | 19000 00 | 581 80 | 577 13 | 583 22 | 19 18 | 9 44 | 1997 54 | 4338 3 |
| * | 1800 000 | 313 00 | 00 | 00 | 568 58 | 19000 00 | 582 36 | 579 26 | 584 11 | 41 65 | 10 60 | 1810 58 | 2944 0 |
| | 1900 000 | 236 00 | 00 | 00 | 570 82 | 19000 00 | 583 25 | 581 35 | 585 50 | 68 42 | 12 11 | 1611 46 | 2297 0 |

| | SECNO | XLCH | ELTRD | ELLC | ELMIN | Q | CWSEL | CRIWS | EG | 10*KS | VCH | AREA | 01K |
|---|---|---|---|---|---|---|---|---|---|---|---|---|---|
| * | 2000 000 | 244 00 | 00 | 00 | 571 60 | 19000 00 | 585 32 | 585 32 | 589 86 | 130 50 | 17 22 | 1124 16 | 1663 2 |
| * | 2100 000 | 204 00 | 00 | 00 | 574 39 | 19000 00 | 588 76 | 588 76 | 593 33 | 126 67 | 17 30 | 1144 44 | 1688 1 |
| * | 2200 000 | 245 00 | 00 | 00 | 577 70 | 19000 00 | 594 02 | 594 02 | 598 79 | 111 82 | 17 74 | 1109 32 | 1796 7 |
| * | 2300 000 | 215 00 | 00 | 00 | 583 21 | 19000 00 | 599 29 | 599 29 | 603 77 | 91 65 | 17 79 | 1166 68 | 1984 6 |
| * | 2400 000 | 266 00 | 00 | 00 | 584 75 | 19000 00 | 604 10 | 604 10 | 606 74 | 57 64 | 14 55 | 1534 82 | 2502 6 |
| * | 2500 000 | 150 00 | 00 | 00 | 584 92 | 19000 00 | 606 03 | 601 23 | 607 35 | 21 29 | 9 84 | 2208 99 | 4117 7 |
| | 2600 000 | 163 00 | 00 | 00 | 585 37 | 19000 00 | 606 32 | 601 79 | 607 65 | 15 76 | 8 33 | 2157 80 | 4786 1 |
| | 2700 000 | 128 00 | 00 | 00 | 585 40 | 19000 00 | 606 47 | 601 75 | 607 91 | 19 28 | 9 54 | 1975 07 | 4326 5 |
| * | 2800 000 | 187 00 | 00 | 00 | 584 95 | 19000 00 | 607 41 | 601 21 | 608 14 | 6 28 | 5 26 | 2975 70 | 7583 2 |
| | 2830 000 | 100 00 | 00 | 00 | 584 90 | 19000 00 | 607 69 | 600 31 | 608 20 | 4 80 | 4 55 | 3641 36 | 8673 6 |
| | 2860 000 | 17 00 | 00 | 00 | 587 80 | 19000 00 | 607 75 | 600 12 | 608 21 | 4 12 | 4 27 | 3841 00 | 9362 5 |
| | 2890 000 | 149 00 | 00 | 00 | 588 46 | 19000 00 | 607 84 | 601 09 | 608 28 | 4 48 | 4 59 | 3690 30 | 8979 8 |
| | 2900 000 | 35 00 | 00 | 00 | 588 50 | 19000 00 | 607 83 | 601 22 | 608 31 | 4 94 | 4 79 | 3514 82 | 8552 3 |
| * | 3000 000 | 228 00 | 00 | 00 | 589 10 | 19000 00 | 607 95 | 601 45 | 608 48 | 10 36 | 6 66 | 3377 69 | 5903 4 |
| * | 3100 000 | 177 00 | 00 | 00 | 589 60 | 19000 00 | 608 37 | 598 91 | 608 60 | 4 14 | 4 16 | 5122 64 | 9338 3 |
| * | 3200 000 | 308 00 | 00 | 00 | 589 71 | 19000 00 | 608 29 | 601 10 | 608 91 | 11 59 | 6 82 | 3107 45 | 5579 8 |
| * | 3300 000 | 187 00 | 00 | 00 | 589 73 | 19000 00 | 608 07 | 603 69 | 609 44 | 27 48 | 9 92 | 2162 36 | 3624 2 |
| * | 3400 000 | 167 00 | 00 | 00 | 589 70 | 19000 00 | 609 27 | 603 05 | 609 82 | 11 57 | 6 44 | 3418 18 | 5585 2 |
| | 3500 000 | 155 00 | 00 | 00 | 588 80 | 19000 00 | 609 33 | 601 30 | 610 08 | 12 04 | 7 19 | 2862 79 | 5475 3 |
| | 3600 000 | 207 00 | 00 | 00 | 589 14 | 19000 00 | 609 34 | 601 72 | 610 50 | 17 47 | 8 79 | 2267 89 | 4546 3 |
| | 3700 000 | 330 00 | 00 | 00 | 590 29 | 19000 00 | 610 36 | 601 51 | 610 98 | 9 83 | 6 56 | 3190 82 | 6059 2 |
| | 3800 000 | 260 00 | 00 | 00 | 591 67 | 19000 00 | 610 88 | 601 34 | 611 21 | 5 68 | 4 80 | 4389 32 | 7973 4 |
| | 4000 000 | 452 00 | 00 | 00 | 593 38 | 19000 00 | 611 10 | 601 88 | 611 54 | 7 46 | 5 37 | 3609 29 | 6957 7 |

AME 14312BCC HC2

SUMMARY PRINTOUT TABLE 150

| | SECNO | Q | CWSEL | DIFWSP | DIFWSX | DIFKWS | TOPWID | XLCH |
|---|---|---|---|---|---|---|---|---|
| | 100 000 | 19000 00 | 559 00 | 00 | 00 | 00 | 289 99 | 00 |
| | 200 000 | 19000 00 | 559 72 | 00 | 72 | 00 | 277 23 | 118 00 |
| * | 400 000 | 19000 00 | 559 45 | 00 | - 27 | 00 | 252 83 | 184 00 |
| | 500 000 | 19000 00 | 560 52 | 00 | 1 07 | 00 | 342 70 | 160 00 |
| * | 600 000 | 19000 00 | 560 43 | 00 | - 08 | 00 | 282 10 | 165 00 |
| * | 700 000 | 19000 00 | 563 25 | 00 | 2 82 | 00 | 490 32 | 253 00 |
| | 800 000 | 19000 00 | 563 63 | 00 | 38 | 00 | 578 88 | 259 00 |
| | 900 000 | 19000 00 | 564 18 | 00 | 55 | 00 | 464 61 | 362 00 |
| | 990 000 | 19000 00 | 564 25 | 00 | 08 | 00 | 251 63 | 241 00 |
| | 1000 000 | 19000 00 | 565 56 | 00 | 1 31 | 00 | 298 89 | 243 00 |
| * | 1100 000 | 19000 00 | 566 07 | 00 | 50 | 00 | 310 60 | 379 00 |
| * | 1150 000 | 19000 00 | 568 23 | 00 | 2 16 | 00 | 369 67 | 223 00 |
| | 1175 000 | 19000 00 | 568 85 | 00 | 62 | 00 | 371 74 | 115 00 |
| | 1200 000 | 19000 00 | 568 71 | 00 | - 13 | 00 | 378 19 | 30 00 |
| * | 1225 000 | 18740 00 | 568 61 | 00 | - 11 | 00 | 369 96 | 5 00 |
| * | 1250 000 | 18740 00 | 569 74 | 00 | 1 13 | 00 | 415 14 | 20 00 |
| * | 1300 000 | 19000 00 | 570 32 | 00 | 58 | 00 | 428 53 | 5 00 |
| * | 1350 000 | 19000 00 | 570 95 | 00 | 62 | 00 | 464 10 | 111 00 |
| * | 1400 000 | 19000 00 | 572 75 | 00 | 1 81 | 00 | 367 72 | 149 00 |
| * | 1500 000 | 19000 00 | 573 77 | 00 | 1 02 | 00 | 178 95 | 263 00 |
| * | 1600 000 | 19000 00 | 578 29 | 00 | 4 52 | 00 | 146 05 | 151 00 |
| * | 1700 000 | 19000 00 | 581 80 | 00 | 3 52 | 00 | 173 97 | 177 00 |
| * | 1800 000 | 19000 00 | 582 36 | 00 | 56 | 00 | 193 50 | 313 00 |
| | 1900 000 | 19000 00 | 583 25 | 00 | 89 | 00 | 192 62 | 236 00 |

| | SECNO | Q | CWSEL | DIFWSP | DIFWSX | DIFKWS | TOPWID | XLCH |
|---|---|---|---|---|---|---|---|---|
| * | 2000 000 | 19000 00 | 585 32 | 00 | 2 07 | 00 | 129 11 | 244 00 |
| * | 2100 000 | 19000 00 | 588 76 | 00 | 3 44 | 00 | 137 42 | 204 00 |
| * | 2200 000 | 19000 00 | 594 02 | 00 | 5 25 | 00 | 120 67 | 245 00 |
| * | 2300 000 | 19000 00 | 599 29 | 00 | 5 27 | 00 | 122 27 | 215 00 |
| * | 2400 000 | 19000 00 | 604 10 | 00 | 4 82 | 00 | 290 86 | 266 00 |
| * | 2500 000 | 19000 00 | 606 03 | 00 | 1 93 | 00 | 304 96 | 150 00 |
| | 2600 000 | 19000 00 | 606 32 | 00 | 28 | 00 | 240 95 | 163 00 |
| | 2700 000 | 19000 00 | 606 47 | 00 | 15 | 00 | 186 70 | 128 00 |
| * | 2800 000 | 19000 00 | 607 41 | 00 | 94 | 00 | 349 00 | 187 00 |
| | 2830 000 | 19000 00 | 607 69 | 00 | 28 | 00 | 343 56 | 100 00 |
| | 2860 000 | 19000 00 | 607 75 | 00 | 05 | 00 | 349 88 | 17 00 |
| | 2890 000 | 19000 00 | 607 84 | 00 | 10 | 00 | 348 90 | 149 00 |
| | 2900 000 | 19000 00 | 607 83 | 00 | - 02 | 00 | 332 46 | 35 00 |
| * | 3000 000 | 19000 00 | 607 95 | 00 | 13 | 00 | 299 45 | 228 00 |
| * | 3100 000 | 19000 00 | 608 37 | 00 | 42 | 00 | 467 00 | 177 00 |
| * | 3200 000 | 19000 00 | 608 29 | 00 | - 08 | 00 | 287 05 | 308 00 |
| * | 3300 000 | 19000 00 | 608 07 | 00 | - 21 | 00 | 234 47 | 187 00 |
| * | 3400 000 | 19000 00 | 609 27 | 00 | 1 20 | 00 | 394 41 | 167 00 |
| | 3500 000 | 19000 00 | 609 33 | 00 | 05 | 00 | 252 00 | 155 00 |
| | 3600 000 | 19000 00 | 609 34 | 00 | 01 | 00 | 167 91 | 207 00 |
| | 3700 000 | 19000 00 | 610 36 | 00 | 1 03 | 00 | 326 37 | 330 00 |
| | 3800 000 | 19000 00 | 610 88 | 00 | 52 | 00 | 430 33 | 260 00 |
| | 4000 000 | 19000 00 | 611 10 | 00 | 21 | 00 | 291 35 | 452 00 |

SUMMARY OF ERRORS AND SPECIAL NOTES

```
WARNING SECNO=    400 000  PROFILE=  1  CONVEYANCE CHANGE OUTSIDE ACCEPTABLE RANGE

CAUTION SECNO=    600 000  PROFILE=  1  CRITICAL DEPTH ASSUMED
CAUTION SECNO=    600 000  PROFILE=  1  MINIMUM SPECIFIC ENERGY

WARNING SECNO=    700 000  PROFILE=  1  CONVEYANCE CHANGE OUTSIDE ACCEPTABLE RANGE

WARNING SECNO=   1100 000  PROFILE=  1  CONVEYANCE CHANGE OUTSIDE ACCEPTABLE RANGE

WARNING SECNO=   1150 000  PROFILE=  1  CONVEYANCE CHANGE OUTSIDE ACCEPTABLE RANGE

CAUTION SECNO=   1225 000  PROFILE=  1  CRITICAL DEPTH ASSUMED
CAUTION SECNO=   1225 000  PROFILE=  1  MINIMUM SPECIFIC ENERGY

WARNING SECNO=   1250 000  PROFILE=  1  CONVEYANCE CHANGE OUTSIDE ACCEPTABLE RANGE

WARNING SECNO=   1300 000  PROFILE=  1  CONVEYANCE CHANGE OUTSIDE ACCEPTABLE RANGE

CAUTION SECNO=   1350 000  PROFILE=  1  CRITICAL DEPTH ASSUMED
CAUTION SECNO=   1350 000  PROFILE=  1  MINIMUM SPECIFIC ENERGY

CAUTION SECNO=   1400 000  PROFILE=  1  CRITICAL DEPTH ASSUMED
CAUTION SECNO=   1400 000  PROFILE=  1  MINIMUM SPECIFIC ENERGY

CAUTION SECNO=   1500 000  PROFILE=  1  CRITICAL DEPTH ASSUMED
CAUTION SECNO=   1500 000  PROFILE=  1  MINIMUM SPECIFIC ENERGY

CAUTION SECNO=   1600 000  PROFILE=  1  CRITICAL DEPTH ASSUMED
CAUTION SECNO=   1600 000  PROFILE=  1  MINIMUM SPECIFIC ENERGY

WARNING SECNO=   1700 000  PROFILE=  1  CONVEYANCE CHANGE OUTSIDE ACCEPTABLE RANGE

WARNING SECNO=   1800 000  PROFILE=  1  CONVEYANCE CHANGE OUTSIDE ACCEPTABLE RANGE

CAUTION SECNO=   2000 000  PROFILE=  1  CRITICAL DEPTH ASSUMED
CAUTION SECNO=   2000 000  PROFILE=  1  MINIMUM SPECIFIC ENERGY

CAUTION SECNO=   2100 000  PROFILE=  1  CRITICAL DEPTH ASSUMED
CAUTION SECNO=   2100 000  PROFILE=  1  MINIMUM SPECIFIC ENERGY

CAUTION SECNO=   2200 000  PROFILE=  1  CRITICAL DEPTH ASSUMED
CAUTION SECNO=   2200 000  PROFILE=  1  MINIMUM SPECIFIC ENERGY

CAUTION SECNO=   2300 000  PROFILE=  1  CRITICAL DEPTH ASSUMED
CAUTION SECNO=   2300 000  PROFILE=  1  MINIMUM SPECIFIC ENERGY

CAUTION SECNO=   2400 000  PROFILE=  1  CRITICAL DEPTH ASSUMED
CAUTION SECNO=   2400 000  PROFILE=  1  MINIMUM SPECIFIC ENERGY

WARNING SECNO=   2500 000  PROFILE=  1  CONVEYANCE CHANGE OUTSIDE ACCEPTABLE RANGE
```

```
WARNING SECNO=   2800 000  PROFILE=  1  CONVEYANCE CHANGE OUTSIDE ACCEPTABLE RANGE

WARNING SECNO=   3000 000  PROFILE=  1  CONVEYANCE CHANGE OUTSIDE ACCEPTABLE RANGE

WARNING SECNO=   3100 000  PROFILE=  1  CONVEYANCE CHANGE OUTSIDE ACCEPTABLE RANGE

WARNING SECNO=   3200 000  PROFILE=  1  CONVEYANCE CHANGE OUTSIDE ACCEPTABLE RANGE

WARNING SECNO=   3300 000  PROFILE=  1  CONVEYANCE CHANGE OUTSIDE ACCEPTABLE RANGE

WARNING SECNO=   3400 000  PROFILE=  1  CONVEYANCE CHANGE OUTSIDE ACCEPTABLE RANGE

E
```

# Post-Project

```
*****************************************
*  HEC-2 WATER SURFACE PROFILES          *
*                                        *
*  Version   4 6 2,  May 1991            *
*                                        *
*  RUN DATE    06MAY05    TIME   09 20 38 *
*****************************************
```

```
*************************************
*  U S  ARMY CORPS OF ENGINEERS
*  HYDROLOGIC ENGINEERING CENTER
*  609 SECOND STREET, SUITE D
*  DAVIS, CALIFORNIA 95616-4687
*          (916) 756-1104
*************************************
```

```
X     X  XXXXXXX   XXXXX              XXXXX
X     X  X        X     X            X     X
X     X  X        X                        X
XXXXXXX  XXXX     X          XXXXX    XXXXX
X     X  X        X                  X
X     X  X        X     X            X
X     X  XXXXXXX   XXXXX             XXXXXXX
```

THIS RUN EXECUTED 06MAY05 09 20 38

```
************************************
 HEC-2 WATER SURFACE PROFILES

 Version  4 6 2,  May 1991
************************************
```

THIS IS AN ARCHIVAL RUN ALL DATA AND RESULTS ARE SAVED ON UNIT 96

```
AC FILENAME  14312BPB HC2
AC THIS RUN IS FOR THE PROPOSED BRIDGE CONDITION (OPTION B)
AC RUN DATE 05/05/05
AC BRIDGE DECK ELEVEVATIONS WERE EXTRAPOLATED TO EXISTING CROSS-SECTIONS
AC PROPOSED GRADING FOR X-SECTIONS 800-1150 INSERTED PER ROOPALI SABNIS' FILE
AC CROSS-SECTIONS GENERATED FROM INROADS
AC CROSS-SECTION 1175 IS A RIPRAP DROP STRUCTURE (D/S OF COUNTRY CLUB DR )
AC CROSS-SECTION 1225 AND 1250 MODEL THE DIP SECTION AT COUNTRY CLUB DR
AC       PER COUNTY OF SAN DIEGO HEC-2 ANALYSIS 260 CFS IS CONVEYED UNDER ROAD
AC       MODELED AS SECTUIN OVER TOP OF ROAD
  ***************************************************************************
T1 HARMONY GROVE VILLAGE  J-14312B   MARCH 28, 2005 (CURRENT CONDITION)
T2 100-YEAR FLOODPLAIN ANALYSIS FOR ESCONDIDO CREEK (Q100= 19000 CFS)
T3 FILENAME  14312BCC HC2

J1  ICHECK    INQ       NINV      IDIR      STRT      METRIC    HVINS     Q         WSEL      FQ

      0         2         0         0         0         0         0         0    559 00       0 0

J2  NPROF     IPLOT     PRFVS     XSECV     XSECH     FN        ALLDC     IBW       CHNIM     ITRACE

      1         0        -1         0         0         0        -1         0         0         15


J3  VARIABLE CODES FOR SUMMARY PRINTOUT

    150         38         43          1          2         66

NC      045        060        040          1          3
QT        1      19000

X1      100         67     163 56     223 26       0 00       0 00       0 00
GR    570 1       0 00     569 91       0 40     567 65       4 80     567 02       6 16     558 13      25 46
GR    557 2      28 62     554 53      41 18     552 72      49 05     551 66      53 57     551 43      56 89
GR    550 5      71 37     550 69      82 10     550 74      86 05     550 61      89 33     550 00     108 41
GR    549 9     112 93     549 74     139 10     549 73     142 27     549 70     144 75     549 33     162 68
GR    548 9     163 49     548 82     163 56     547 28     166 01     542 02     174 36     541 86     177 88
GR    541 5     185 90     541 65     196 57     541 73     202 75     542 94     206 05     546 80     216 06
GR    549 9     222 55     550 14     223 26     552 05     228 12     553 30     231 90     554 20     244 71
GR    554 5     250 49     554 23     275 76     554 17     281 52     554 75     287 20     556 35     302 92
GR    556 5     304 48     557 12     306 67     561 05     321 08     561 98     336 28     562 01     336 59
GR    562 0     337 29     562 55     345 60     562 79     349 09     562 68     352 16     562 60     354 88
GR    562 4     361 10     565 64     365 59     566 50     366 81     567 44     379 69     567 79     384 20
```

GR 567 5 384 87 564 15 392 91 563 88 394 15 562 34 400 93 561 99 402 53

| | | | | | | | | | | |
|---|---|---|---|---|---|---|---|---|---|---|
| GR | 562 6 | 416 84 | 562 76 | 420 80 | 563 45 | 424 99 | 566 28 | 441 01 | 566 83 | 443 46 |
| GR | 569 6 | 455 70 | 569 97 | 457 50 | | | | | | |

| | | | | | | | | | | |
|---|---|---|---|---|---|---|---|---|---|---|
| X1 | 200 | 56 | 208 35 | 256 11 | 50 15 | 132 85 | 118 00 | | | |
| GR | 569 9 | 0 00 | 566 59 | 5 59 | 565 33 | 8 35 | 558 15 | 23 11 | 556 86 | 27 63 |
| GR | 552 8 | 40 28 | 550 96 | 60 28 | 550 88 | 61 52 | 550 82 | 63 51 | 550 18 | 82 56 |
| GR | 550 0 | 90 12 | 549 69 | 100 72 | 549 54 | 106 61 | 549 39 | 116 16 | 549 25 | 133 69 |
| GR | 548 9 | 142 51 | 548 30 | 163 05 | 548 55 | 173 68 | 548 84 | 185 75 | 548 24 | 205 60 |
| GR | 548 2 | 208 22 | 548 12 | 208 35 | 547 44 | 210 70 | 544 96 | 218 72 | 543 12 | 224 60 |
| GR | 541 7 | 228 50 | 541 76 | 236 89 | 541 83 | 242 58 | 542 60 | 243 83 | 544 82 | 247 35 |
| GR | 549 9 | 256 11 | 550 06 | 256 36 | 550 99 | 258 06 | 551 17 | 267 39 | 552 52 | 279 53 |
| GR | 553 1 | 284 42 | 556 09 | 290 56 | 560 82 | 299 08 | 561 27 | 304 35 | 561 81 | 310 55 |
| GR | 562 1 | 313 34 | 562 71 | 320 99 | 562 96 | 323 74 | 562 76 | 328 78 | 562 58 | 334 49 |
| GR | 564 7 | 337 01 | 566 88 | 339 81 | 567 96 | 354 51 | 568 10 | 356 68 | 568 20 | 360 00 |
| GR | 568 6 | 374 34 | 568 91 | 391 06 | 568 98 | 394 84 | 569 64 | 407 88 | 569 85 | 413 29 |
| GR | 570 0 | 415 48 | | | | | | | | |

| | | | | | | | | | | |
|---|---|---|---|---|---|---|---|---|---|---|
| X1 | 400 | 68 | 184 71 | 224 58 | 92 97 | 210 98 | 184 00 | | | |
| GR | 570 0 | 0 00 | 566 71 | 8 00 | 562 41 | 21 97 | 559 48 | 31 19 | 558 07 | 36 78 |
| GR | 554 4 | 52 34 | 554 36 | 55 05 | 553 47 | 70 44 | 552 98 | 79 29 | 552 91 | 81 08 |
| GR | 552 1 | 99 90 | 551 72 | 109 85 | 551 55 | 113 40 | 550 23 | 141 62 | 550 18 | 153 11 |
| GR | 550 2 | 160 99 | 550 03 | 173 29 | 549 85 | 182 43 | 549 83 | 182 85 | 549 77 | 182 92 |
| GR | 548 0 | 184 71 | 545 86 | 186 80 | 544 49 | 187 91 | 543 07 | 190 48 | 542 94 | 202 87 |
| GR | 542 8 | 215 44 | 546 97 | 219 58 | 547 98 | 220 42 | 548 97 | 222 24 | 550 04 | 224 31 |
| GR | 550 2 | 224 58 | 552 22 | 228 49 | 552 05 | 245 35 | 552 04 | 246 20 | 552 03 | 246 37 |
| GR | 552 0 | 246 97 | 552 82 | 264 76 | 557 71 | 278 91 | 559 58 | 284 56 | 559 66 | 287 88 |
| GR | 560 0 | 293 30 | 560 57 | 300 37 | 560 91 | 303 33 | 561 05 | 306 81 | 561 80 | 321 35 |
| GR | 562 7 | 335 52 | 563 50 | 352 71 | 563 68 | 356 56 | 563 82 | 359 17 | 564 22 | 365 98 |
| GR | 564 8 | 376 29 | 564 89 | 378 32 | 565 29 | 387 28 | 565 10 | 392 58 | 565 11 | 397 13 |
| GR | 565 1 | 397 19 | 565 13 | 400 25 | 565 20 | 402 73 | 565 32 | 404 61 | 565 53 | 406 03 |
| GR | 565 9 | 414 66 | 566 48 | 434 27 | 566 55 | 435 10 | 566 84 | 437 85 | 566 89 | 438 65 |
| GR | 567 3 | 441 94 | 567 62 | 446 40 | 567 83 | 449 13 | | | | |

| | | | | | | | | | | |
|---|---|---|---|---|---|---|---|---|---|---|
| NC | 0 030 | 0 030 | 0 045 | | | | | | | |
| X1 | 500 | 65 | 104 86 | 159 61 | 73 42 | 206 86 | 160 00 | | | |
| GR | 570 2 | 0 00 | 566 44 | 7 30 | 562 01 | 17 64 | 558 88 | 26 47 | 555 62 | 41 81 |
| GR | 554 4 | 47 97 | 554 21 | 50 34 | 553 44 | 65 40 | 553 16 | 68 41 | 552 31 | 81 96 |
| GR | 551 9 | 88 23 | 551 78 | 89 99 | 551 21 | 94 76 | 549 99 | 104 86 | 549 99 | 104 88 |
| GR | 549 5 | 108 50 | 547 67 | 111 14 | 545 16 | 114 95 | 543 72 | 122 27 | 543 31 | 123 84 |
| GR | 543 4 | 129 87 | 543 49 | 137 56 | 543 48 | 145 21 | 543 82 | 146 61 | 544 29 | 148 19 |
| GR | 545 8 | 152 73 | 547 70 | 154 79 | 551 99 | 159 28 | 552 30 | 159 61 | 553 44 | 174 27 |
| GR | 553 5 | 175 43 | 553 49 | 176 37 | 553 44 | 179 48 | 553 33 | 188 68 | 553 51 | 192 74 |
| GR | 553 6 | 196 29 | 553 81 | 206 45 | 553 20 | 210 77 | 552 19 | 219 10 | 552 06 | 227 65 |
| GR | 552 0 | 230 12 | 553 43 | 238 47 | 553 54 | 239 08 | 553 54 | 239 28 | 553 84 | 256 51 |
| GR | 555 3 | 262 85 | 558 04 | 274 02 | 558 49 | 285 51 | 559 65 | 308 23 | 559 66 | 308 32 |
| GR | 559 7 | 308 41 | 559 66 | 309 92 | 559 65 | 316 88 | 559 44 | 323 02 | 559 63 | 335 03 |
| GR | 559 9 | 347 98 | 559 93 | 349 83 | 560 84 | 372 75 | 560 89 | 375 95 | 561 03 | 384 96 |
| GR | 561 1 | 386 75 | 561 50 | 387 89 | 565 50 | 398 05 | 565 97 | 402 91 | 566 13 | 404 43 |

| | | | | | | | | | | | |
|---|---|---|---|---|---|---|---|---|---|---|---|
| X1 | 600 | 46 | 56 57 | 115 79 | 130 94 | 168 90 | 165 00 | | | | |
| GR | 580 0 | 0 00 | 579 22 | 1 76 | 564 94 | 22 88 | 564 58 | 23 37 | 564 38 | 23 74 | |
| GR | 556 8 | 40 65 | 555 96 | 43 74 | 552 67 | 54 15 | 552 07 | 56 57 | 550 04 | 64 79 | |
| GR | 548 5 | 71 65 | 547 93 | 74 12 | 547 39 | 86 16 | 546 60 | 103 51 | 551 46 | 114 40 | |
| GR | 552 2 | 115 79 | 553 68 | 118 70 | 554 19 | 120 22 | 554 61 | 145 35 | 554 64 | 147 17 | |
| GR | 554 7 | 149 09 | 554 77 | 170 59 | 554 95 | 177 40 | 555 66 | 187 34 | 555 91 | 195 81 | |
| GR | 556 5 | 210 35 | 557 64 | 224 82 | 558 65 | 234 29 | 558 65 | 234 92 | 558 65 | 237 24 | |
| GR | 558 7 | 242 46 | 558 65 | 243 86 | 558 52 | 245 30 | 558 20 | 255 78 | 559 62 | 282 77 | |
| GR | 559 7 | 284 68 | 559 97 | 295 65 | 560 44 | 314 99 | 560 45 | 317 38 | 560 63 | 342 46 | |
| GR | 561 1 | 349 64 | 562 53 | 367 45 | 563 99 | 380 45 | 564 10 | 382 61 | 564 53 | 384 11 | |
| GR | 566 2 | 393 05 | | | | | | | | | |

| | | | | | | | | | | | |
|---|---|---|---|---|---|---|---|---|---|---|---|
| X1 | 700 | 56 | 69 28 | 141 26 | 241 23 | 236 94 | 253 00 | | | | |
| GR | 590 1 | 0 00 | 588 79 | 3 17 | 587 05 | 6 34 | 584 96 | 9 20 | 580 66 | 15 79 | |
| GR | 573 5 | 30 86 | 572 32 | 33 36 | 569 93 | 38 56 | 561 49 | 54 45 | 559 93 | 57 55 | |
| GR | 554 9 | 67 34 | 554 16 | 69 28 | 553 45 | 71 12 | 552 04 | 73 99 | 550 49 | 79 33 | |
| GR | 548 1 | 87 31 | 548 14 | 116 50 | 548 14 | 116 70 | 548 29 | 117 16 | 554 97 | 138 14 | |
| GR | 556 0 | 141 26 | 556 00 | 141 36 | 556 55 | 143 08 | 556 62 | 147 66 | 556 88 | 175 43 | |
| GR | 556 9 | 204 74 | 556 94 | 214 90 | 556 62 | 231 67 | 556 57 | 244 24 | 556 87 | 261 47 | |
| GR | 557 2 | 273 73 | 557 49 | 281 08 | 559 38 | 325 32 | 559 54 | 333 07 | 559 46 | 355 66 | |
| GR | 559 4 | 365 46 | 559 09 | 384 22 | 559 00 | 392 47 | 558 97 | 412 74 | 559 17 | 423 42 | |
| GR | 559 3 | 440 28 | 559 44 | 454 21 | 559 84 | 474 80 | 560 06 | 484 77 | 560 87 | 505 93 | |
| GR | 561 1 | 513 17 | 561 41 | 517 17 | 562 56 | 533 66 | 563 89 | 548 78 | 564 15 | 551 17 | |
| GR | 564 5 | 553 76 | 566 34 | 567 84 | 567 48 | 581 49 | 567 66 | 583 55 | 568 18 | 585 32 | |
| GR | 570 2 | 591 79 | | | | | | | | | |

Proposed condition grading starts here

| | | | | | | | | | | | |
|---|---|---|---|---|---|---|---|---|---|---|---|
| X1 | 800 | 56 | 240 25 | 310 74 | 300 31 | 191 90 | 259 00 | | | | |
| GR | 570 06 | 47 31 | 569 71 | 49 37 | 567 33 | 59 63 | 565 5 | 72 09 | 564 77 | 76 57 | |
| GR | 563 54 | 92 63 | 563 37 | 95 54 | 563 16 | 98 18 | 561 9 | 120 27 | 560 61 | 142 79 | |
| GR | 560 34 | 144 72 | 556 44 | 170 25 | 556 08 | 178 30 | 556 0 | 200 26 | 555 95 | 202 42 | |
| GR | 555 32 | 233 33 | 555 41 | 235 36 | 554 16 | 240 25 | 554 0 | 240 87 | 551 53 | 249 09 | |
| GR | 548 14 | 259 76 | 548 13 | 292 71 | 548 71 | 295 70 | 555 3 | 309 94 | 555 70 | 310 74 | |
| GR | 555 98 | 311 30 | 556 53 | 312 92 | 557 82 | 332 46 | 558 3 | 337 22 | 558 60 | 341 16 | |
| GR | 559 76 | 371 62 | 560 47 | 393 40 | 560 47 | 394 36 | 560 7 | 420 98 | 560 70 | 428 72 | |
| GR | 560 61 | 458 38 | 560 64 | 475 54 | 560 58 | 485 02 | 560 4 | 504 50 | 560 11 | 528 13 | |
| GR | 560 10 | 530 72 | 560 38 | 555 83 | 560 81 | 586 37 | 560 9 | 589 36 | 561 79 | 620 17 | |
| GR | 562 49 | 640 63 | 563 53 | 668 50 | 564 33 | 684 42 | 565 3 | 704 96 | 565 60 | 710 15 | |
| GR | 566 31 | 720 86 | 567 78 | 740 26 | 568 87 | 746 12 | 569 6 | 750 33 | 576 00 | 753 79 | |
| GR | 576 68 | 787 79 | | | | | | | | | |

| | | | | | | | | | | | |
|---|---|---|---|---|---|---|---|---|---|---|---|
| X1 | 900 | 50 | 111 15 | 215 76 | 325 65 | 275 45 | 362 00 | | | | |
| GR | 580 0 | 0 00 | 578 02 | 5 24 | 575 03 | 13 60 | 571 25 | 24 52 | 569 53 | 29 54 | |
| GR | 565 2 | 40 58 | 564 93 | 41 62 | 564 68 | 42 55 | 563 60 | 47 18 | 562 62 | 51 07 | |
| GR | 561 4 | 56 41 | 560 83 | 58 57 | 560 41 | 59 93 | 559 41 | 62 85 | 558 65 | 64 33 | |
| GR | 558 4 | 70 30 | 558 16 | 74 72 | 558 07 | 79 76 | 557 64 | 92 00 | 557 31 | 105 48 | |
| GR | 557 3 | 108 32 | 556 95 | 108 96 | 556 14 | 111 15 | 554 09 | 116 71 | 549 21 | 124 77 | |
| GR | 548 2 | 126 31 | 548 26 | 147 37 | 550 40 | 151 75 | 551 02 | 166 39 | 550 72 | 177 12 | |
| GR | 550 7 | 180 56 | 550 73 | 202 21 | 551 81 | 206 58 | 552 67 | 209 71 | 553 43 | 210 83 | |

| | | | | | | | | | | |
|---|---|---|---|---|---|---|---|---|---|---|
| GR | 555 6 | 213 90 | 556 77 | 215 76 | 556 95 | 223 14 | 557 48 | 238 20 | 557 51 | 243 04 |
| GR | 557 7 | 257 66 | 558 31 | 275 32 | 558 60 | 290 23 | 560 00 | 294 60 | 562 00 | 439 60 |
| GR | 564 0 | 539 60 | 564 60 | 565 60 | 565 70 | 623 60 | 574 90 | 637 60 | 575 60 | 674 60 |

| | | | | | | | | | | |
|---|---|---|---|---|---|---|---|---|---|---|
| ET | | 9 1 | | | | | | | 224 04 | 658 05 |
| X1 | 990 | 53 | 277 98 | 399 85 | 276 91 | 196 09 | 241 00 | | | |
| GR | 573 00 | 4 00 | 561 80 | 31 00 | 561 80 | 71 00 | 558 40 | 80 00 | 558 10 | 89 95 |
| GR | 558 18 | 117 57 | 557 98 | 131 44 | 557 87 | 142 97 | 557 88 | 149 52 | 558 10 | 165 05 |
| GR | 558 27 | 183 05 | 558 61 | 197 21 | 559 61 | 201 28 | 561 18 | 208 45 | 565 40 | 222 42 |
| GR | 565 93 | 224 04 | 565 83 | 234 12 | 564 97 | 235 68 | 561 40 | 242 43 | 559 70 | 250 00 |
| GR | 558 97 | 252 81 | 557 70 | 265 04 | 556 93 | 273 14 | 555 94 | 277 98 | 554 70 | 283 91 |
| GR | 554 27 | 286 51 | 551 99 | 303 80 | 550 60 | 313 88 | 549 77 | 319 89 | 549 80 | 320 61 |
| GR | 549 53 | 337 81 | 549 55 | 339 56 | 549 55 | 346 63 | 550 30 | 350 59 | 550 40 | 350 87 |
| GR | 550 62 | 351 64 | 551 68 | 356 52 | 551 36 | 366 43 | 551 57 | 373 12 | 552 10 | 381 50 |
| GR | 552 40 | 389 07 | 552 99 | 390 97 | 555 56 | 398 64 | 556 25 | 399 85 | 559 40 | 405 38 |
| GR | 562 00 | 488 00 | 563 84 | 580 00 | 564 00 | 588 00 | 565 50 | 640 00 | 566 00 | 653 00 |
| GR | 568 00 | 680 00 | 572 60 | 715 00 | 573 30 | 751 00 | | | | |

| | | | | | | | | | | |
|---|---|---|---|---|---|---|---|---|---|---|
| ET | | 9 1 | | | | | | | 140 00 | 580 00 |
| X1 | 1001 | 25 | 267 00 | 390 00 | 137 63 | 298 36 | 287 00 | | | |
| GR | 572 4 | 0 00 | 572 20 | 33 00 | 563 10 | 55 00 | 563 10 | 95 00 | 562 00 | 128 00 |
| GR | 564 0 | 133 00 | 565 90 | 140 00 | 565 90 | 160 00 | 564 00 | 167 00 | 562 00 | 179 00 |
| GR | 560 0 | 211 00 | 558 00 | 250 00 | 556 00 | 267 00 | 554 00 | 273 00 | 552 00 | 285 00 |
| GR | 551 7 | 290 00 | 551 70 | 325 00 | 551 70 | 368 00 | 552 00 | 372 00 | 558 00 | 386 00 |
| GR | 560 0 | 390 00 | 562 00 | 524 00 | 563 00 | 537 00 | 563 00 | 567 00 | 570 00 | 581 00 |

| | | | | | | | | | | |
|---|---|---|---|---|---|---|---|---|---|---|
| ET | | 9 1 | | | | | | | 318 53 | 756 50 |
| X1 | 1100 | 35 | 362 99 | 426 83 | 433 05 | 371 89 | 335 00 | | | |
| GR | 572 00 | 16 00 | 571 00 | 116 00 | 570 50 | 171 00 | 566 80 | 180 00 | 566 80 | 220 00 |
| GR | 568 71 | 228 83 | 567 26 | 244 31 | 567 11 | 245 62 | 565 79 | 248 35 | 563 90 | 252 74 |
| GR | 562 02 | 260 11 | 562 02 | 277 64 | 564 45 | 285 22 | 565 14 | 286 99 | 566 70 | 290 79 |
| GR | 570 00 | 297 73 | 570 28 | 298 35 | 570 42 | 318 53 | 565 24 | 334 92 | 565 60 | 341 19 |
| GR | 564 10 | 358 17 | 563 63 | 362 16 | 562 46 | 362 99 | 556 82 | 367 00 | 552 20 | 370 46 |
| GR | 552 60 | 389 54 | 552 41 | 413 40 | 554 92 | 418 25 | 556 74 | 421 86 | 559 40 | 426 83 |
| GR | 562 00 | 554 00 | 564 00 | 676 00 | 566 00 | 699 00 | 578 00 | 720 00 | 578 70 | 757 00 |

| | | | | | | | | | | |
|---|---|---|---|---|---|---|---|---|---|---|
| ET | | 9 1 | | | | | | | 346 28 | 757 50 |
| NC | | | | 3 | 5 | | | | | |
| X1 | 1150 | 40 | 408 09 | 488 94 | 179 25 | 227 76 | 223 00 | | | |
| GR | 571 67 | 0 00 | 571 00 | 174 00 | 569 60 | 214 00 | 568 50 | 216 00 | 568 50 | 255 00 |
| GR | 567 99 | 271 34 | 565 40 | 277 92 | 565 12 | 278 52 | 564 75 | 279 51 | 562 43 | 286 43 |
| GR | 562 12 | 305 42 | 565 50 | 316 38 | 571 06 | 329 48 | 571 96 | 346 28 | 570 29 | 350 98 |
| GR | 566 75 | 359 97 | 566 50 | 370 46 | 566 21 | 383 20 | 564 65 | 398 40 | 564 27 | 401 53 |
| GR | 562 14 | 407 17 | 561 80 | 408 09 | 557 60 | 417 18 | 557 21 | 420 03 | 555 86 | 430 78 |
| GR | 555 00 | 441 61 | 554 60 | 445 54 | 554 22 | 447 43 | 553 30 | 452 40 | 552 67 | 460 26 |
| GR | 552 18 | 464 44 | 552 60 | 475 74 | 553 38 | 477 26 | 556 29 | 482 36 | 559 87 | 488 94 |
| GR | 562 00 | 521 00 | 564 00 | 628 00 | 566 00 | 693 00 | 579 30 | 721 00 | 580 00 | 758 00 |

Proposed condition grading ends here

| | | | | | | | | | | |
|---|---|---|---|---|---|---|---|---|---|---|
| X1 | 1175 | 19 | 96 00 | 240 00 | 96 00 | 140 00 | 115 00 | | | |
| GR | 571 1 | 0 00 | 570 00 | 20 00 | 568 00 | 39 00 | 566 00 | 62 50 | 563 45 | 85 00 |
| GR | 561 1 | 96 00 | 558 00 | 110 00 | 555 42 | 143 00 | 553 25 | 172 00 | 554 96 | 202 00 |
| GR | 558 0 | 232 00 | 560 18 | 240 00 | 564 00 | 254 00 | 564 92 | 283 00 | 565 67 | 310 00 |
| GR | 566 3 | 333 00 | 567 00 | 365 00 | 567 90 | 400 00 | 570 00 | 406 00 | | |

| | | | | | | | | | | |
|---|---|---|---|---|---|---|---|---|---|---|
| NC | 0 039 | 0 039 | 0 039 | | | | | | | |
| X1 | 1200 | 23 | 310 00 | 472 00 | 30 00 | 20 00 | 30 00 | | | |
| GR | 574 1 | 0 00 | 573 46 | 19 00 | 572 86 | 40 00 | 572 00 | 71 00 | 571 45 | 96 00 |
| GR | 570 7 | 130 00 | 570 00 | 168 00 | 569 00 | 198 00 | 568 00 | 231 00 | 566 35 | 264 00 |
| GR | 564 0 | 295 50 | 562 50 | 310 00 | 561 00 | 315 00 | 559 41 | 340 50 | 558 00 | 367 00 |
| GR | 557 6 | 403 00 | 559 50 | 429 00 | 561 09 | 472 00 | 561 47 | 482 00 | 564 00 | 498 00 |
| GR | 564 98 | 524 50 | 566 00 | 547 00 | 569 80 | 601 00 | | | | |

| | | | | | | | | | | |
|---|---|---|---|---|---|---|---|---|---|---|
| QT | 1 | 18740 | | | | | | | | |
| NC | 0 018 | 0 018 | 0 018 | | | | | | | |
| X1 | 1225 | 80 | 308 82 | 471 47 | 5 02 | 4 85 | 5 00 | | | |
| GR | 574 0 | 0 00 | 573 35 | 16 25 | 573 34 | 16 54 | 572 49 | 50 26 | 572 05 | 67 85 |
| GR | 571 7 | 85 74 | 571 65 | 87 39 | 571 29 | 105 30 | 570 71 | 134 79 | 570 64 | 137 53 |
| GR | 570 4 | 147 79 | 570 43 | 148 14 | 570 34 | 152 52 | 570 02 | 165 76 | 569 96 | 168 56 |
| GR | 569 3 | 194 96 | 569 24 | 197 58 | 568 21 | 223 77 | 568 06 | 227 39 | 567 42 | 241 55 |
| GR | 567 3 | 244 70 | 566 63 | 258 87 | 565 76 | 271 96 | 565 55 | 275 22 | 564 69 | 288 18 |
| GR | 564 4 | 291 68 | 563 60 | 302 74 | 563 49 | 304 16 | 563 32 | 308 82 | 563 28 | 310 04 |
| GR | 562 9 | 317 29 | 562 65 | 321 54 | 562 26 | 326 93 | 562 14 | 330 04 | 562 12 | 345 41 |
| GR | 562 1 | 347 49 | 562 12 | 352 45 | 562 07 | 364 29 | 562 11 | 376 28 | 562 08 | 387 23 |
| GR | 562 1 | 394 99 | 562 09 | 399 39 | 562 04 | 410 17 | 562 33 | 423 72 | 562 40 | 430 08 |
| GR | 562 5 | 432 71 | 562 98 | 457 01 | 563 02 | 459 67 | 563 20 | 471 47 | 563 24 | 474 06 |
| GR | 563 3 | 475 58 | 563 32 | 477 36 | 563 45 | 486 36 | 563 50 | 490 16 | 563 65 | 498 13 |
| GR | 563 6 | 499 03 | 563 93 | 499 26 | 563 95 | 499 52 | 564 32 | 511 41 | 564 35 | 512 26 |
| GR | 564 4 | 512 31 | 564 77 | 525 43 | 564 77 | 525 76 | 565 59 | 543 35 | 565 69 | 545 60 |
| GR | 565 7 | 545 69 | 566 00 | 549 86 | 566 90 | 562 04 | 566 94 | 562 63 | 568 03 | 578 24 |
| GR | 568 1 | 578 98 | 569 88 | 595 50 | 569 93 | 595 83 | 571 74 | 611 01 | 571 76 | 611 17 |
| GR | 574 1 | 624 72 | 574 90 | 630 63 | 575 15 | 632 33 | 575 91 | 637 97 | 575 98 | 638 48 |

| | | | | | | | | | | |
|---|---|---|---|---|---|---|---|---|---|---|
| NC | 0 018 | 0 018 | 0 018 | | | | | | | |
| X1 | 1250 | 80 | 305 15 | 467 88 | 19 96 | 18 98 | 20 00 | | | |
| GR | 574 0 | 0 00 | 573 55 | 12 14 | 573 53 | 12 75 | 573 04 | 26 44 | 572 98 | 28 11 |
| GR | 572 0 | 61 53 | 571 92 | 64 98 | 571 86 | 68 38 | 571 58 | 83 39 | 571 58 | 85 76 |
| GR | 571 3 | 101 23 | 571 23 | 104 23 | 570 99 | 121 46 | 570 97 | 123 33 | 570 70 | 141 43 |
| GR | 570 7 | 142 03 | 570 67 | 142 43 | 570 44 | 150 19 | 570 11 | 160 93 | 570 09 | 161 76 |
| GR | 569 5 | 180 41 | 569 03 | 193 85 | 568 96 | 196 29 | 568 47 | 209 64 | 568 34 | 212 77 |
| GR | 567 9 | 226 05 | 567 26 | 237 53 | 567 09 | 240 88 | 565 93 | 263 53 | 565 71 | 266 94 |
| GR | 564 6 | 283 81 | 564 42 | 286 63 | 563 30 | 304 00 | 563 21 | 305 15 | 563 20 | 305 17 |
| GR | 562 8 | 313 12 | 562 57 | 317 14 | 562 17 | 324 65 | 562 16 | 325 91 | 562 12 | 364 96 |
| GR | 562 1 | 365 98 | 562 12 | 367 01 | 562 12 | 367 95 | 562 12 | 405 71 | 562 07 | 409 12 |
| GR | 562 2 | 420 55 | 562 23 | 426 08 | 562 84 | 441 24 | 562 91 | 444 81 | 563 14 | 459 78 |
| GR | 563 2 | 461 40 | 563 35 | 467 88 | 563 41 | 469 93 | 563 59 | 479 93 | 563 61 | 481 37 |

| | | | | | | | | | | |
|---|---|---|---|---|---|---|---|---|---|---|
| GR | 563 7 | 484 61 | 563 81 | 493 12 | 564 09 | 500 22 | 565 03 | 523 88 | 566 00 | 542 20 |
| GR | 566 4 | 549 70 | 566 42 | 550 09 | 566 44 | 550 45 | 566 48 | 551 23 | 567 51 | 567 49 |
| GR | 567 6 | 568 70 | 568 66 | 580 15 | 568 86 | 581 78 | 570 12 | 591 01 | 570 33 | 592 40 |
| GR | 571 7 | 600 89 | 571 77 | 601 27 | 572 00 | 602 41 | 573 47 | 609 20 | 573 50 | 609 38 |
| GR | 573 6 | 609 96 | 574 29 | 615 30 | 575 19 | 619 79 | 575 62 | 622 54 | 576 00 | 624 14 |

| | | | | | | | | | | |
|---|---|---|---|---|---|---|---|---|---|---|
| QT | 1 | 19000 | | | | | | | | |
| NC | 0 030 | 0 030 | 0 040 | | | | | | | |
| X1 | 1300 | 80 | 274 32 | 437 11 | 5 77 | 6 47 | 5 00 | | | |
| GR | 574 0 | 0 00 | 573 24 | 20 62 | 572 42 | 33 44 | 572 09 | 35 57 | 572 23 | 42 40 |
| GR | 572 1 | 46 29 | 572 61 | 53 01 | 572 52 | 57 48 | 572 45 | 64 88 | 572 04 | 75 31 |
| GR | 571 8 | 81 71 | 571 88 | 99 14 | 572 03 | 102 77 | 572 07 | 112 42 | 571 56 | 116 95 |
| GR | 571 1 | 120 46 | 570 23 | 125 78 | 570 22 | 127 15 | 570 49 | 132 50 | 570 20 | 137 64 |
| GR | 570 0 | 137 96 | 569 68 | 147 20 | 569 28 | 155 70 | 568 30 | 182 36 | 568 18 | 184 21 |
| GR | 567 7 | 195 84 | 567 16 | 207 45 | 566 88 | 211 08 | 565 83 | 231 41 | 566 18 | 234 08 |
| GR | 566 0 | 236 97 | 565 03 | 251 68 | 563 68 | 271 09 | 563 61 | 274 32 | 563 18 | 282 61 |
| GR | 562 8 | 286 87 | 562 54 | 291 06 | 562 34 | 291 92 | 562 06 | 296 53 | 561 67 | 307 40 |
| GR | 561 6 | 309 86 | 560 23 | 325 36 | 560 02 | 328 36 | 559 68 | 331 20 | 559 68 | 374 07 |
| GR | 559 7 | 374 17 | 561 57 | 378 35 | 561 53 | 380 57 | 561 59 | 392 51 | 561 54 | 395 12 |
| GR | 561 7 | 402 03 | 561 83 | 408 78 | 561 92 | 417 46 | 562 22 | 422 02 | 562 29 | 423 75 |
| GR | 563 3 | 437 11 | 563 68 | 441 48 | 563 80 | 448 74 | 563 96 | 452 29 | 564 07 | 459 15 |
| GR | 564 2 | 463 39 | 564 47 | 464 55 | 564 66 | 469 28 | 564 80 | 475 54 | 564 74 | 479 50 |
| GR | 565 2 | 490 75 | 565 29 | 496 76 | 566 25 | 514 52 | 566 46 | 520 09 | 567 25 | 533 51 |
| GR | 567 4 | 534 98 | 568 15 | 544 10 | 569 51 | 554 83 | 570 91 | 564 09 | 573 18 | 575 29 |
| GR | 574 0 | 581 60 | 574 29 | 583 60 | 575 34 | 588 90 | 575 50 | 589 96 | 575 98 | 591 97 |

| | | | | | | | | | | |
|---|---|---|---|---|---|---|---|---|---|---|
| X1 | 1350 | 69 | 419 89 | 523 87 | 122 29 | 98 86 | 111 00 | | | |
| GR | 580 0 | 0 00 | 578 61 | 10 16 | 578 20 | 13 41 | 576 57 | 30 89 | 576 43 | 32 50 |
| GR | 576 4 | 33 10 | 574 90 | 53 19 | 573 98 | 65 39 | 573 35 | 75 78 | 573 15 | 79 28 |
| GR | 572 1 | 105 03 | 571 96 | 106 95 | 571 12 | 127 19 | 570 89 | 133 06 | 570 88 | 134 40 |
| GR | 570 6 | 159 20 | 570 67 | 171 88 | 570 66 | 179 46 | 570 83 | 181 79 | 570 73 | 186 12 |
| GR | 570 3 | 201 44 | 570 41 | 207 46 | 570 42 | 212 82 | 571 93 | 216 37 | 572 44 | 217 70 |
| GR | 571 0 | 222 90 | 570 24 | 224 92 | 570 23 | 239 98 | 570 23 | 240 20 | 570 23 | 240 47 |
| GR | 570 1 | 252 22 | 569 96 | 270 40 | 569 94 | 270 84 | 569 49 | 286 10 | 569 07 | 300 28 |
| GR | 569 1 | 300 65 | 568 60 | 329 39 | 568 60 | 329 53 | 568 60 | 331 52 | 568 55 | 353 55 |
| GR | 568 5 | 354 97 | 568 20 | 379 77 | 568 16 | 381 07 | 567 95 | 385 72 | 566 80 | 408 28 |
| GR | 566 3 | 415 85 | 565 98 | 419 89 | 564 83 | 434 41 | 564 17 | 437 16 | 561 53 | 447 99 |
| GR | 561 4 | 449 32 | 559 68 | 462 64 | 559 68 | 487 54 | 559 92 | 488 59 | 561 18 | 493 98 |
| GR | 561 9 | 502 61 | 564 12 | 523 87 | 564 12 | 523 89 | 565 25 | 542 51 | 565 87 | 551 99 |
| GR | 566 0 | 566 78 | 566 18 | 572 75 | 567 56 | 588 48 | 567 85 | 596 57 | 567 99 | 597 09 |
| GR | 572 9 | 609 77 | 573 03 | 610 22 | 573 20 | 610 64 | 578 16 | 624 36 | | |

| | | | | | | | | | | |
|---|---|---|---|---|---|---|---|---|---|---|
| NC | | | | 1 | 3 | | | | | |
| X1 | 1400 | 65 | 314 34 | 380 04 | 99 38 | 202 99 | 149 00 | | | |
| GR | 579 9 | 0 00 | 578 61 | 8 93 | 578 13 | 13 25 | 577 90 | 14 75 | 577 78 | 15 64 |
| GR | 576 0 | 33 22 | 575 74 | 35 58 | 575 49 | 38 27 | 575 31 | 40 97 | 574 02 | 52 59 |
| GR | 573 8 | 55 73 | 572 70 | 74 16 | 572 59 | 75 83 | 572 52 | 77 07 | 572 17 | 81 90 |
| GR | 571 9 | 87 48 | 571 43 | 96 96 | 572 66 | 107 17 | 572 79 | 108 38 | 572 67 | 108 88 |
| GR | 570 6 | 117 57 | 570 35 | 125 74 | 570 07 | 131 79 | 570 45 | 133 83 | 571 10 | 138 58 |
| GR | 570 7 | 147 93 | 570 72 | 149 02 | 570 65 | 150 64 | 570 03 | 166 43 | 570 00 | 167 25 |

| | | | | | | | | | | |
|---|---|---|---|---|---|---|---|---|---|---|
| GR | 569 8 | 173 17 | 569 75 | 180 65 | 569 28 | 203 24 | 569 17 | 208 57 | 568 65 | 234 27 |
| GR | 568 6 | 237 62 | 568 76 | 258 50 | 568 78 | 263 05 | 568 70 | 288 47 | 568 70 | 290 44 |
| GR | 568 6 | 294 27 | 568 32 | 308 02 | 568 08 | 313 10 | 568 02 | 313 96 | 568 00 | 314 34 |
| GR | 567 6 | 320 44 | 561 36 | 333 95 | 559 72 | 337 34 | 559 55 | 352 99 | 559 40 | 367 19 |
| GR | 561 4 | 371 18 | 565 84 | 380 04 | 567 09 | 382 53 | 567 46 | 392 05 | 568 22 | 411 33 |
| GR | 569 2 | 422 38 | 570 02 | 430 92 | 570 17 | 432 44 | 570 40 | 435 13 | 571 72 | 438 24 |
| GR | 576 1 | 451 89 | 576 75 | 453 97 | 578 99 | 460 64 | 579 54 | 461 86 | 580 20 | 463 50 |

| | | | | | | | | | | |
|---|---|---|---|---|---|---|---|---|---|---|
| X1 | 1500 | 32 | 29 32 | 106 79 | 254 80 | 213 94 | 263 00 | | | |
| GR | 590 0 | 0 00 | 587 54 | 3 24 | 582 16 | 11 28 | 579 17 | 15 86 | 573 64 | 24 11 |
| GR | 570 2 | 29 32 | 567 80 | 32 84 | 567 26 | 33 78 | 566 47 | 34 94 | 559 83 | 45 07 |
| GR | 559 7 | 68 59 | 559 66 | 77 85 | 561 86 | 86 58 | 565 74 | 102 69 | 566 04 | 106 79 |
| GR | 566 2 | 109 35 | 567 09 | 121 15 | 569 97 | 141 24 | 570 56 | 145 38 | 571 41 | 151 16 |
| GR | 571 0 | 161 16 | 570 78 | 168 91 | 570 87 | 180 75 | 571 46 | 191 56 | 571 88 | 200 41 |
| GR | 580 0 | 210 99 | 580 77 | 212 00 | 581 87 | 214 68 | 584 20 | 220 33 | 584 45 | 222 30 |
| GR | 585 4 | 232 09 | 589 95 | 239 53 | | | | | | |

| | | | | | | | | | | |
|---|---|---|---|---|---|---|---|---|---|---|
| X1 | 1600 | 43 | 32 10 | 99 18 | 142 73 | 176 27 | 151 00 | | | |
| GR | 588 0 | 0 00 | 588 39 | 1 80 | 588 75 | 3 26 | 588 22 | 5 58 | 587 74 | 8 01 |
| GR | 584 1 | 13 23 | 582 23 | 16 60 | 578 96 | 22 42 | 575 60 | 28 84 | 574 40 | 32 10 |
| GR | 571 5 | 39 91 | 569 56 | 44 38 | 567 86 | 49 63 | 564 88 | 59 62 | 564 41 | 61 09 |
| GR | 564 4 | 62 20 | 564 06 | 75 46 | 565 28 | 81 09 | 565 97 | 83 80 | 568 35 | 92 91 |
| GR | 570 4 | 99 18 | 571 87 | 103 69 | 573 20 | 107 72 | 572 44 | 113 15 | 572 39 | 113 74 |
| GR | 572 3 | 114 54 | 571 79 | 120 74 | 571 58 | 123 51 | 571 11 | 130 68 | 570 91 | 141 98 |
| GR | 571 2 | 147 57 | 571 73 | 154 20 | 571 91 | 156 97 | 578 16 | 169 49 | 580 20 | 173 71 |
| GR | 580 4 | 174 13 | 580 76 | 174 58 | 583 93 | 180 17 | 587 86 | 186 91 | 588 41 | 199 71 |
| GR | 588 5 | 202 80 | 588 79 | 206 49 | 590 00 | 208 93 | | | | |

| | | | | | | | | | | |
|---|---|---|---|---|---|---|---|---|---|---|
| X1 | 1700 | 39 | 18 94 | 101 75 | 173 26 | 152 55 | 177 00 | | | |
| GR | 590 4 | 0 00 | 587 51 | 4 02 | 586 54 | 5 22 | 585 64 | 6 25 | 578 75 | 13 97 |
| GR | 576 4 | 17 41 | 575 09 | 18 94 | 572 67 | 21 84 | 570 79 | 24 55 | 569 63 | 26 80 |
| GR | 564 9 | 32 55 | 564 40 | 33 27 | 564 40 | 33 81 | 564 39 | 53 71 | 565 51 | 60 57 |
| GR | 567 2 | 73 02 | 568 16 | 81 56 | 569 52 | 95 87 | 570 00 | 101 68 | 570 00 | 101 75 |
| GR | 570 6 | 110 35 | 571 65 | 124 79 | 571 92 | 139 90 | 572 04 | 152 00 | 572 20 | 158 83 |
| GR | 573 3 | 166 23 | 573 62 | 168 06 | 573 73 | 169 17 | 574 23 | 173 44 | 576 45 | 176 68 |
| GR | 581 7 | 184 38 | 584 63 | 188 51 | 587 69 | 193 16 | 588 28 | 202 61 | 588 45 | 205 76 |
| GR | 588 5 | 206 73 | 588 59 | 207 31 | 588 68 | 209 38 | 590 03 | 225 80 | | |

| | | | | | | | | | | |
|---|---|---|---|---|---|---|---|---|---|---|
| NC | 0 060 | 0 030 | 0 045 | | | | | | | |
| X1 | 1800 | 36 | 72 78 | 211 85 | 446 95 | 216 87 | 313 00 | | | |
| GR | 600 1 | 0 00 | 598 66 | 5 74 | 595 90 | 15 87 | 590 97 | 33 18 | 590 29 | 35 46 |
| GR | 590 0 | 36 54 | 584 35 | 54 60 | 582 44 | 59 71 | 578 02 | 72 78 | 577 65 | 73 87 |
| GR | 577 3 | 74 88 | 577 18 | 75 78 | 576 70 | 79 67 | 574 40 | 97 82 | 574 19 | 99 68 |
| GR | 571 3 | 110 83 | 570 97 | 112 08 | 569 99 | 124 32 | 569 54 | 129 56 | 569 39 | 131 52 |
| GR | 569 2 | 138 75 | 569 32 | 169 87 | 568 58 | 175 15 | 568 58 | 188 10 | 568 58 | 194 01 |
| GR | 573 0 | 208 01 | 574 00 | 211 37 | 574 14 | 211 85 | 574 43 | 212 88 | 574 43 | 215 32 |
| GR | 574 9 | 219 63 | 575 76 | 233 05 | 579 09 | 242 32 | 580 18 | 245 53 | 580 40 | 249 24 |
| GR | 589 9 | 269 53 | | | | | | | | |

| | | | | | | | | | | |
|---|---|---|---|---|---|---|---|---|---|---|
| X1 | 1900 | 34 | 107 49 | 271 33 | 214 30 | 245 02 | 236 00 | | | |
| GR | 600 0 | 0 00 | 599 52 | 2 86 | 593 92 | 29 89 | 593 52 | 31 51 | 593 25 | 32 57 |
| GR | 590 5 | 43 44 | 589 65 | 46 98 | 586 28 | 60 02 | 585 66 | 61 96 | 585 57 | 65 11 |
| GR | 585 4 | 71 91 | 584 63 | 75 50 | 584 40 | 78 88 | 584 06 | 81 65 | 581 79 | 90 51 |
| GR | 581 5 | 93 01 | 579 54 | 100 63 | 578 58 | 107 49 | 577 56 | 114 74 | 576 47 | 125 37 |
| GR | 575 8 | 133 34 | 573 22 | 163 13 | 572 24 | 183 17 | 572 00 | 188 66 | 571 13 | 210 93 |
| GR | 571 0 | 215 54 | 570 86 | 226 64 | 570 82 | 231 23 | 573 56 | 246 56 | 575 51 | 256 70 |
| GR | 578 8 | 267 41 | 579 93 | 271 33 | 580 36 | 272 82 | 589 73 | 287 67 | | |

| | | | | | | | | | | |
|---|---|---|---|---|---|---|---|---|---|---|
| X1 | 2000 | 25 | 58 79 | 166 42 | 196 19 | 259 41 | 244 00 | | | |
| GR | 600 0 | 0 00 | 599 70 | 1 09 | 598 74 | 3 73 | 589 16 | 25 94 | 588 58 | 27 69 |
| GR | 588 3 | 30 94 | 588 32 | 41 10 | 585 72 | 48 48 | 583 21 | 55 99 | 582 61 | 58 79 |
| GR | 580 5 | 68 50 | 579 90 | 71 94 | 576 21 | 87 91 | 572 14 | 112 16 | 571 97 | 113 31 |
| GR | 571 6 | 115 98 | 571 63 | 120 65 | 571 71 | 141 04 | 575 56 | 152 93 | 579 28 | 163 39 |
| GR | 580 1 | 166 42 | 580 64 | 168 17 | 583 31 | 175 99 | 587 82 | 182 25 | 598 57 | 198 57 |

| | | | | | | | | | | |
|---|---|---|---|---|---|---|---|---|---|---|
| NC | 0 060 | 0 040 | 0 045 | | | | | | | |
| X1 | 2100 | 30 | 69 15 | 173 17 | 192 76 | 210 52 | 204 00 | | | |
| GR | 610 0 | 0 00 | 606 06 | 8 38 | 601 14 | 20 83 | 596 17 | 30 08 | 591 51 | 38 45 |
| GR | 589 9 | 43 27 | 586 46 | 54 33 | 586 32 | 64 19 | 586 29 | 67 99 | 585 86 | 69 15 |
| GR | 585 3 | 70 61 | 580 13 | 88 95 | 579 06 | 99 40 | 576 89 | 115 93 | 575 73 | 127 74 |
| GR | 574 6 | 137 68 | 574 54 | 144 10 | 574 39 | 150 92 | 577 44 | 157 91 | 580 43 | 165 10 |
| GR | 583 7 | 173 17 | 583 99 | 173 81 | 588 08 | 181 50 | 589 08 | 185 67 | 589 08 | 185 72 |
| GR | 593 3 | 195 23 | 593 62 | 195 75 | 594 19 | 196 61 | 595 17 | 198 21 | 599 99 | 205 84 |

| | | | | | | | | | | |
|---|---|---|---|---|---|---|---|---|---|---|
| NH | 5 | 03 | 38 17 | 02 | 48 94 | 045 | 186 79 | 02 | 203 49 | 03 |
| NH | 215 3 | | | | | | | | | |
| X1 | 2200 | 32 | 59 41 | 145 70 | 244 93 | 261 26 | 245 00 | | | |
| GR | 610 0 | 0 00 | 605 17 | 13 26 | 601 81 | 20 98 | 593 06 | 36 64 | 592 36 | 38 17 |
| GR | 592 2 | 41 85 | 591 90 | 48 94 | 592 09 | 53 44 | 591 98 | 54 85 | 590 84 | 57 02 |
| GR | 589 8 | 59 41 | 583 96 | 72 25 | 580 01 | 93 54 | 578 80 | 100 31 | 578 19 | 107 56 |
| GR | 577 7 | 117 18 | 579 03 | 124 50 | 582 36 | 133 22 | 583 64 | 135 26 | 586 82 | 139 71 |
| GR | 589 8 | 145 70 | 590 50 | 146 98 | 591 66 | 149 44 | 592 60 | 151 90 | 598 11 | 166 30 |
| GR | 598 3 | 173 78 | 598 23 | 186 79 | 598 30 | 188 46 | 598 94 | 203 49 | 599 07 | 204 70 |
| GR | 599 2 | 205 96 | 599 98 | 215 30 | | | | | | |

| | | | | | | | | | | |
|---|---|---|---|---|---|---|---|---|---|---|
| NH | 5 | 03 | 21 45 | 02 | 32 68 | 045 | 144 01 | 02 | 244 78 | 03 |
| NH | 255 6 | | | | | | | | | |
| X1 | 2300 | 38 | 48 61 | 115 32 | 219 25 | 163 91 | 215 00 | | | |
| GR | 610 1 | 0 00 | 608 18 | 3 80 | 607 58 | 4 88 | 604 13 | 9 71 | 595 85 | 21 45 |
| GR | 595 5 | 32 60 | 595 49 | 32 64 | 595 48 | 32 68 | 594 38 | 42 60 | 592 12 | 45 53 |
| GR | 589 9 | 48 61 | 587 27 | 52 16 | 583 52 | 75 42 | 583 21 | 77 39 | 583 21 | 77 61 |
| GR | 584 0 | 93 88 | 584 61 | 96 33 | 587 73 | 107 98 | 589 93 | 115 32 | 591 04 | 119 04 |
| GR | 595 7 | 130 09 | 599 84 | 140 20 | 600 05 | 144 01 | 600 91 | 163 78 | 601 36 | 187 95 |
| GR | 601 5 | 196 06 | 601 49 | 198 68 | 601 55 | 208 67 | 601 60 | 209 98 | 602 03 | 219 89 |
| GR | 602 1 | 229 19 | 602 22 | 236 57 | 602 75 | 244 78 | 602 82 | 245 99 | 604 84 | 248 55 |
| GR | 607 5 | 252 00 | 608 27 | 253 32 | 610 05 | 255 60 | | | | |

| | | | | | | | | | | |
|---|---|---|---|---|---|---|---|---|---|---|
| NH | 5 | 03 | 19 69 | 02 | 147 06 | 045 | 249 75 | 02 | 414 13 | 03 |
| NH | 440 5 | | | | | | | | | |
| X1 | 2400 | 60 | 190 60 | 243 98 | 392 50 | 130 98 | 266 00 | | | |
| GR | 620 0 | 0 00 | 608 63 | 19 69 | 607 06 | 22 48 | 607 16 | 34 06 | 607 23 | 42 10 |
| GR | 607 1 | 48 94 | 606 81 | 59 22 | 606 14 | 59 65 | 602 34 | 63 42 | 602 32 | 69 02 |
| GR | 602 2 | 88 53 | 601 41 | 119 00 | 601 33 | 121 86 | 601 28 | 123 25 | 601 10 | 125 39 |
| GR | 600 0 | 142 73 | 600 46 | 147 06 | 600 48 | 147 75 | 596 95 | 155 90 | 596 18 | 157 65 |
| GR | 595 9 | 158 11 | 595 93 | 162 18 | 595 75 | 187 56 | 594 20 | 190 60 | 591 32 | 196 27 |
| GR | 589 0 | 200 74 | 588 67 | 201 76 | 584 75 | 212 85 | 584 82 | 220 31 | 584 84 | 222 99 |
| GR | 586 4 | 223 92 | 588 19 | 228 12 | 589 90 | 231 98 | 591 94 | 239 00 | 595 90 | 243 98 |
| GR | 598 4 | 247 12 | 599 75 | 249 75 | 599 99 | 251 95 | 601 78 | 268 31 | 603 24 | 298 53 |
| GR | 603 4 | 301 38 | 603 71 | 315 44 | 603 91 | 324 33 | 603 81 | 333 05 | 603 60 | 345 88 |
| GR | 604 2 | 353 79 | 604 98 | 376 30 | 604 87 | 380 25 | 604 96 | 391 50 | 605 20 | 404 91 |
| GR | 605 3 | 414 13 | 609 80 | 414 15 | 610 14 | 414 39 | 610 37 | 420 05 | 611 59 | 425 35 |
| GR | 613 5 | 428 13 | 615 50 | 431 81 | 616 33 | 433 44 | 618 61 | 437 79 | 620 01 | 440 50 |

| | | | | | | | | | | |
|---|---|---|---|---|---|---|---|---|---|---|
| NH | 5 | 03 | 18 26 | 02 | 111 04 | 045 | 284 22 | 02 | 357 89 | 03 |
| NH | 379 7 | | | | | | | | | |
| X1 | 2500 | 69 | 135 97 | 218 33 | 141 68 | 125 80 | 150 00 | | | |
| GR | 619 8 | 0 00 | 619 73 | 0 24 | 613 58 | 13 49 | 609 64 | 18 26 | 606 58 | 22 13 |
| GR | 606 4 | 24 20 | 606 09 | 26 50 | 606 23 | 31 43 | 606 54 | 41 98 | 606 58 | 50 40 |
| GR | 606 5 | 57 71 | 602 25 | 59 81 | 602 02 | 59 95 | 602 03 | 60 52 | 602 00 | 66 20 |
| GR | 601 9 | 73 69 | 601 77 | 74 64 | 601 62 | 76 68 | 600 53 | 90 48 | 600 20 | 96 93 |
| GR | 601 4 | 99 11 | 602 15 | 102 13 | 602 69 | 103 77 | 601 01 | 108 44 | 600 06 | 111 04 |
| GR | 599 7 | 111 84 | 597 40 | 118 00 | 596 02 | 121 45 | 595 72 | 126 51 | 595 51 | 134 33 |
| GR | 594 8 | 135 97 | 593 21 | 139 33 | 589 08 | 148 77 | 588 26 | 153 38 | 587 05 | 156 90 |
| GR | 585 4 | 160 64 | 585 25 | 162 26 | 585 17 | 165 07 | 584 92 | 172 18 | 585 46 | 177 29 |
| GR | 588 5 | 193 06 | 589 18 | 195 62 | 594 38 | 215 25 | 595 74 | 218 33 | 597 75 | 222 89 |
| GR | 604 3 | 237 47 | 603 87 | 251 58 | 603 59 | 261 11 | 603 58 | 265 45 | 603 58 | 274 60 |
| GR | 604 3 | 284 22 | 604 36 | 284 90 | 604 38 | 286 76 | 604 49 | 304 68 | 604 72 | 325 38 |
| GR | 604 7 | 325 86 | 604 72 | 326 07 | 605 04 | 327 53 | 605 01 | 329 72 | 604 45 | 345 79 |
| GR | 604 3 | 355 28 | 604 91 | 357 89 | 605 83 | 362 68 | 607 55 | 364 61 | 608 86 | 366 65 |
| GR | 610 4 | 368 07 | 615 85 | 373 35 | 616 81 | 374 50 | 619 63 | 379 70 | | |

| | | | | | | | | | | |
|---|---|---|---|---|---|---|---|---|---|---|
| NH | 6 | 03 | 25 20 | 02 | 119 49 | 045 | 215 87 | 02 | 270 00 | 03 |
| NH | 359 0 | 018 | 388 00 | | | | | | | |
| ET | | 9 1 | | | | | | | | 336 00 |
| X1 | 2600 | 56 | 131 68 | 203 64 | 163 37 | 159 36 | 163 00 | | | |
| GR | 620 1 | 0 00 | 613 25 | 18 44 | 612 66 | 20 07 | 610 62 | 23 87 | 610 15 | 24 74 |
| GR | 609 9 | 25 20 | 605 57 | 29 85 | 602 44 | 36 07 | 601 85 | 42 38 | 600 70 | 46 07 |
| GR | 600 3 | 57 86 | 600 25 | 58 12 | 600 18 | 58 45 | 600 08 | 59 16 | 598 35 | 69 72 |
| GR | 598 3 | 73 95 | 598 28 | 73 98 | 597 04 | 100 12 | 596 79 | 105 92 | 596 79 | 106 35 |
| GR | 597 4 | 115 41 | 597 73 | 119 49 | 598 26 | 125 91 | 596 21 | 131 68 | 594 02 | 137 86 |
| GR | 591 4 | 144 91 | 590 00 | 149 03 | 585 37 | 163 29 | 585 37 | 171 17 | 585 37 | 181 35 |
| GR | 589 1 | 188 03 | 590 32 | 190 68 | 594 31 | 201 25 | 594 38 | 201 40 | 595 36 | 202 89 |
| GR | 595 9 | 203 64 | 603 95 | 215 87 | 603 98 | 217 93 | 604 12 | 227 36 | 604 14 | 232 05 |
| GR | 604 3 | 241 35 | 604 51 | 250 42 | 604 72 | 260 97 | 604 78 | 263 94 | 604 82 | 270 00 |
| GR | 615 0 | 0 270 00 | 615 00 | 336 00 | 605 38 | 336 00 | 610 70 | 344 49 | 611 00 | 345 27 |
| GR | 612 4 | 347 91 | 615 83 | 354 20 | 615 97 | 356 16 | 616 60 | 359 00 | 616 90 | 382 00 |
| GR | 616 8 | 388 00 | | | | | | | | |

| | | | | | | | | | | |
|---|---|---|---|---|---|---|---|---|---|---|
| NH | 6 | 03 | 42 83 | 02 | 167 97 | 045 | 255 81 | 02 | 360 84 | 03 |
| NH | 392 0 | 018 | 428 00 | | | | | | | |
| ET | | 9 1 | | | | | | | | 322 00 |
| X1 | 2700 | 56 | 189 01 | 255 81 | 133 14 | 128 43 | 128 00 | | | |
| GR | 619 7 | 0 00 | 618 10 | 2 58 | 613 19 | 11 60 | 612 95 | 12 05 | 612 35 | 23 77 |
| GR | 612 3 | 25 00 | 608 12 | 33 34 | 605 79 | 37 42 | 601 14 | 42 83 | 598 07 | 47 60 |
| GR | 597 9 | 53 52 | 597 85 | 59 00 | 607 00 | 59 00 | 607 00 | 141 07 | 596 71 | 141 07 |
| GR | 596 2 | 160 44 | 596 00 | 167 97 | 597 19 | 173 37 | 597 53 | 175 53 | 599 03 | 182 16 |
| GR | 599 1 | 182 59 | 598 50 | 184 32 | 596 57 | 189 01 | 591 58 | 201 27 | 586 08 | 215 94 |
| GR | 585 4 | 217 78 | 585 40 | 222 29 | 585 44 | 226 94 | 585 49 | 228 51 | 586 10 | 240 06 |
| GR | 590 8 | 251 90 | 592 60 | 255 81 | 593 18 | 257 04 | 597 08 | 260 92 | 602 97 | 266 03 |
| GR | 604 1 | 283 73 | 604 70 | 293 32 | 604 78 | 305 00 | 614 00 | 305 00 | 614 00 | 322 00 |
| GR | 614 0 | 355 00 | 604 90 | 355 00 | 604 88 | 359 91 | 604 90 | 360 84 | 605 00 | 361 42 |
| GR | 607 3 | 368 61 | 608 60 | 373 39 | 609 59 | 377 90 | 609 70 | 380 40 | 609 70 | 381 35 |
| GR | 610 0 | 386 00 | 612 25 | 392 00 | 612 00 | 402 00 | 612 00 | 410 00 | 612 20 | 422 00 |
| GR | 612 05 | 428 00 | | | | | | | | |

| | | | | | | | | | | |
|---|---|---|---|---|---|---|---|---|---|---|
| NH | 6 | 03 | 28 61 | 02 | 220 53 | 045 | 297 53 | 018 | 384 48 | 03 |
| NH | 429 0 | 018 | 445 00 | | | | | | | |
| X1 | 2800 | 49 | 224 43 | 287 27 | 105 29 | 189 76 | 187 00 | | | |
| GR | 619 8 | 0 00 | 616 11 | 9 36 | 611 92 | 15 55 | 608 39 | 20 10 | 600 23 | 26 55 |
| GR | 597 9 | 28 61 | 597 90 | 55 00 | 610 00 | 55 00 | 610 00 | 66 96 | 610 00 | 104 00 |
| GR | 610 0 | 104 0 | 610 00 | 113 00 | 597 29 | 113 00 | 597 10 | 142 39 | 597 05 | 154 74 |
| GR | 597 0 | 174 30 | 596 49 | 198 45 | 596 23 | 208 30 | 596 20 | 208 83 | 596 23 | 209 44 |
| GR | 596 7 | 212 10 | 598 10 | 220 53 | 598 68 | 224 43 | 599 00 | 226 47 | 596 85 | 231 10 |
| GR | 590 8 | 241 56 | 585 31 | 252 58 | 584 95 | 253 32 | 585 00 | 254 13 | 585 50 | 274 49 |
| GR | 591 7 | 282 28 | 593 91 | 285 19 | 595 43 | 287 27 | 597 60 | 290 30 | 602 68 | 297 53 |
| GR | 602 4 | 300 24 | 602 62 | 310 66 | 602 34 | 326 89 | 602 90 | 347 29 | 603 17 | 354 95 |
| GR | 603 9 | 371 24 | 604 38 | 384 48 | 604 59 | 386 34 | 606 00 | 401 51 | 606 88 | 409 16 |
| GR | 608 0 | 410 00 | 610 00 | 429 00 | 610 00 | 441 00 | 609 90 | 445 00 | | |

| | | | | | | | | | | |
|---|---|---|---|---|---|---|---|---|---|---|
| NH | 6 | 03 | 19 50 | 02 | 221 21 | 045 | 355 00 | 03 | 368 00 | 02 |
| NH | 398 00 | 03 | 454 00 | | | | | | | |
| X1 | 2830 | 57 | 229 02 | 341 92 | 26 81 | 130 09 | 100 00 | | | |
| GR | 620 0 | 0 00 | 605 00 | 19 50 | 597 85 | 66 00 | 610 80 | 66 00 | 610 80 | 87 00 |
| GR | 610 7 | 87 00 | 610 40 | 127 00 | 597 40 | 127 00 | 597 08 | 151 98 | 596 95 | 178 70 |
| GR | 596 9 | 182 53 | 596 90 | 185 32 | 596 33 | 207 61 | 596 17 | 215 66 | 597 51 | 221 21 |
| GR | 597 5 | 221 42 | 598 00 | 223 59 | 598 33 | 228 02 | 598 43 | 229 02 | 598 78 | 233 02 |
| GR | 599 3 | 239 83 | 599 20 | 239 87 | 596 24 | 248 34 | 595 62 | 251 43 | 593 21 | 261 55 |
| GR | 591 5 | 268 06 | 590 60 | 273 13 | 589 74 | 276 45 | 587 95 | 283 75 | 587 10 | 286 91 |
| GR | 586 4 | 287 54 | 584 90 | 289 93 | 584 95 | 297 19 | 584 95 | 298 30 | 584 95 | 299 36 |
| GR | 585 0 | 300 35 | 585 10 | 305 17 | 585 12 | 308 53 | 585 27 | 310 32 | 585 24 | 311 05 |
| GR | 586 8 | 313 88 | 588 90 | 320 26 | 591 94 | 326 36 | 592 58 | 329 38 | 594 15 | 336 09 |
| GR | 596 1 | 341 92 | 599 00 | 355 00 | 600 00 | 365 50 | 601 00 | 368 00 | 602 00 | 398 00 |
| GR | 604 0 | 404 00 | 606 00 | 408 50 | 608 00 | 417 00 | 610 00 | 424 00 | 612 00 | 431 00 |
| GR | 614 0 | 440 00 | 616 00 | 454 00 | | | | | | |

| | | | | | | | | | | |
|---|---|---|---|---|---|---|---|---|---|---|
| NH | 6 | 03 | 23 80 | 02 | 220 85 | 045 | 349 00 | 03 | 369 00 | 02 |
| NH | 397 50 | 03 | 455 00 | | | | | | | |
| X1 | 2860 | 58 | 221 28 | 335 67 | 23 80 | 29 22 | 17 00 | | | |
| GR | 620 0 | 0 00 | 615 00 | 9 50 | 600 00 | 23 80 | 597 85 | 48 50 | 597 65 | 80 00 |
| GR | 610 0 | 80 00 | 610 00 | 143 00 | 597 28 | 143 00 | 597 13 | 155 56 | 596 99 | 160 86 |
| GR | 596 9 | 177 45 | 596 70 | 199 32 | 596 66 | 199 87 | 596 65 | 200 27 | 596 58 | 203 03 |
| GR | 596 4 | 210 82 | 596 00 | 220 85 | 595 98 | 221 28 | 595 95 | 223 40 | 595 84 | 229 38 |
| GR | 595 2 | 235 29 | 594 70 | 242 40 | 594 62 | 242 92 | 594 12 | 246 53 | 592 56 | 252 05 |
| GR | 592 0 | 256 40 | 590 60 | 264 36 | 589 20 | 270 14 | 588 28 | 275 51 | 588 32 | 282 57 |
| GR | 588 3 | 287 19 | 588 10 | 291 73 | 588 06 | 293 20 | 587 91 | 297 60 | 587 86 | 304 51 |
| GR | 587 9 | 306 76 | 587 80 | 309 48 | 588 08 | 310 37 | 588 06 | 313 04 | 590 19 | 316 45 |
| GR | 591 8 | 320 17 | 594 00 | 328 79 | 594 40 | 330 56 | 594 74 | 331 62 | 595 98 | 335 67 |
| GR | 599 0 | 349 00 | 600 00 | 356 00 | 600 70 | 369 00 | 601 00 | 397 50 | 602 00 | 403 00 |
| GR | 604 0 | 408 00 | 606 00 | 413 00 | 608 00 | 418 00 | 610 00 | 424 00 | 612 00 | 431 00 |
| GR | 614 0 | 437 00 | 616 00 | 445 00 | 618 00 | 455 00 | | | | |

| | | | | | | | | | | |
|---|---|---|---|---|---|---|---|---|---|---|
| NH | 6 | 03 | 72 95 | 02 | 146 74 | 045 | 290 48 | 02 | 451 71 | 018 |
| NH | 473 4 | 03 | 488 59 | | | | | | | |
| X1 | 2890 | 65 | 177 48 | 290 48 | 135 02 | 192 23 | 149 00 | | | |
| X4 | 14 | 615 00 | 15 00 | 607 00 | 54 00 | 602 50 | 59 00 | 599 99 | 143 90 | 599 90 |
| X4 | 144 0 | 600 09 | 151 00 | 600 09 | 151 10 | 589 57 | 200 83 | 588 46 | 207 64 | 589 43 |
| X4 | 265 94 | 591 59 | 272 90 | 591 60 | 273 00 | 604 20 | 368 00 | 604 40 | 370 00 | |
| GR | 620 0 | 0 00 | 611 00 | 25 31 | 611 09 | 30 42 | 611 03 | 36 05 | 610 95 | 39 56 |
| GR | 610 9 | 44 55 | 611 05 | 49 52 | 611 09 | 50 76 | 607 20 | 56 04 | 600 64 | 66 62 |
| GR | 600 0 | 72 95 | 599 69 | 77 94 | 598 42 | 96 09 | 598 40 | 102 95 | 598 63 | 111 78 |
| GR | 599 2 | 125 30 | 600 00 | 146 74 | 600 21 | 156 78 | 597 30 | 169 49 | 595 81 | 177 48 |
| GR | 594 6 | 184 08 | 589 57 | 200 93 | 588 46 | 207 74 | 588 90 | 216 32 | 589 07 | 220 60 |
| GR | 588 9 | 244 21 | 588 89 | 244 27 | 588 89 | 244 39 | 588 90 | 244 64 | 589 43 | 265 84 |
| GR | 591 0 | 270 27 | 593 93 | 279 22 | 595 84 | 290 48 | 596 90 | 297 00 | 597 40 | 299 71 |
| GR | 597 4 | 300 67 | 599 70 | 341 22 | 600 42 | 349 97 | 600 70 | 352 09 | 603 14 | 362 61 |
| GR | 603 8 | 365 67 | 603 98 | 366 41 | 604 75 | 381 42 | 605 00 | 383 38 | 605 38 | 388 51 |
| GR | 606 4 | 391 30 | 606 80 | 394 98 | 607 04 | 397 30 | 607 80 | 403 84 | 608 08 | 405 33 |
| GR | 609 3 | 412 19 | 609 43 | 413 81 | 610 70 | 419 25 | 610 80 | 421 09 | 612 60 | 441 23 |
| GR | 613 1 | 445 77 | 613 42 | 451 71 | 614 05 | 462 87 | 614 10 | 463 00 | 614 06 | 463 11 |
| GR | 613 7 | 473 40 | 614 07 | 475 39 | 614 20 | 476 42 | 616 20 | 480 00 | 621 10 | 488 59 |

PROPOSED BRIDGE CROSSING

| | | | | | | | | | | |
|---|---|---|---|---|---|---|---|---|---|---|
| NH | 6 | 03 | 72 95 | 02 | 146 74 | 045 | 290 48 | 02 | 451 71 | 018 |
| NH | 473 4 | 03 | 488 59 | | | | | | | |
| X1 | 2897 | 79 | 177 48 | 290 48 | 1 | 1 | 1 | | | |
| X2 | | | | 615 | 620 | | | | | |
| BT | -20 | 0 0 | 620 00 | 620 00 | 15 00 | 620 00 | 615 00 | 54 00 | 620 00 | 615 00 |
| BT | | 59 00 | 620 00 | 615 00 | 143 90 | 620 00 | 615 00 | 144 00 | 620 00 | 600 00 |
| BT | | 151 00 | 620 00 | 600 09 | 151 10 | 620 00 | 615 00 | 200 83 | 620 00 | 615 00 |
| BT | | 200 93 | 620 00 | 589 57 | 207 64 | 620 00 | 588 46 | 207 74 | 620 00 | 615 00 |
| BT | | 265 84 | 620 00 | 615 00 | 265 94 | 620 00 | 589 50 | 272 90 | 620 00 | 592 00 |
| BT | | 273 00 | 620 00 | 615 00 | 368 00 | 620 00 | 615 00 | 370 00 | 620 00 | 615 00 |
| BT | | 480 00 | 620 00 | 616 20 | 488 59 | 621 10 | 621 10 | | | |
| GR | 620 0 | 0 00 | 615 00 | 15 00 | 611 00 | 25 31 | 611 09 | 30 42 | 611 03 | 36 05 |
| GR | 610 95 | 39 56 | 610 9 | 44 55 | 611 05 | 49 52 | 611 09 | 50 76 | 607 00 | 54 00 |

| | | | | | | | | | | |
|---|---|---|---|---|---|---|---|---|---|---|
| GR | 607 20 | 56 04 | 602 50 | 59 00 | 600 64 | 66 62 | 600 0 | 72 95 | 599 69 | 77 94 |
| GR | 598 42 | 96 09 | 598 40 | 102 95 | 598 63 | 111 78 | 599 2 | 125 30 | 599 99 | 143 90 |
| GR | 599 9 | 144 0 | 600 00 | 146 74 | 600 09 | 151 00 | 600 09 | 151 10 | 600 21 | 156 78 |
| GR | 597 30 | 169 49 | 595 81 | 177 48 | 594 6 | 184 08 | 589 57 | 200 83 | 589 57 | 200 93 |
| GR | 588 46 | 207 64 | 588 46 | 207 74 | 588 90 | 216 32 | 589 07 | 220 60 | 588 9 | 244 21 |
| GR | 588 89 | 244 27 | 588 89 | 244 39 | 588 90 | 244 64 | 589 43 | 265 84 | 589 43 | 265 94 |
| GR | 591 0 | 270 27 | 591 59 | 272 90 | 591 60 | 273 00 | 593 93 | 279 22 | 595 84 | 290 48 |
| GR | 596 90 | 297 00 | 597 40 | 299 71 | 597 4 | 300 67 | 599 70 | 341 22 | 600 42 | 349 97 |
| GR | 600 70 | 352 09 | 603 14 | 362 61 | 603 8 | 365 67 | 603 98 | 366 41 | 604 20 | 368 00 |
| GR | 604 40 | 370 00 | 604 75 | 381 42 | 605 00 | 383 38 | 605 38 | 388 51 | 606 4 | 391 30 |
| GR | 606 80 | 394 98 | 607 04 | 397 30 | 607 80 | 403 84 | 608 08 | 405 33 | 609 3 | 412 19 |
| GR | 609 43 | 413 81 | 610 70 | 419 25 | 610 80 | 421 09 | 612 60 | 441 23 | 613 1 | 445 77 |
| GR | 613 42 | 451 71 | 614 05 | 462 87 | 614 10 | 463 00 | 614 06 | 463 11 | 613 7 | 473 40 |
| GR | 614 07 | 475 39 | 614 20 | 476 42 | 616 20 | 480 00 | 621 10 | 488 59 | | |

REPEAT BT AND GR DATA FROM DOWNSTREAM FACE OF BRIDGE

| | | | | | | | | | | |
|---|---|---|---|---|---|---|---|---|---|---|
| NH | 6 | 03 | 72 95 | 02 | 146 74 | 045 | 290 48 | 02 | 451 71 | 018 |
| NH | 473 4 | 03 | 488 59 | | | | | | | |
| X1 | 2899 | 79 | 177 48 | 290 48 | 33 | 33 | 33 | | | |
| X2 | | | | 615 | 620 | | | | | |
| BT | -20 | 0 0 | 620 00 | 620 00 | 15 00 | 620 00 | 615 00 | 54 00 | 620 00 | 615 00 |
| BT | | 59 00 | 620 00 | 615 00 | 143 90 | 620 00 | 615 00 | 144 00 | 620 00 | 600 00 |
| BT | | 151 00 | 620 00 | 600 09 | 151 10 | 620 00 | 615 00 | 200 83 | 620 00 | 615 00 |
| BT | | 200 93 | 620 00 | 589 57 | 207 64 | 620 00 | 588 46 | 207 74 | 620 00 | 615 00 |
| BT | | 265 84 | 620 00 | 615 00 | 265 94 | 620 00 | 589 50 | 272 90 | 620 00 | 592 00 |
| BT | | 273 00 | 620 00 | 615 00 | 368 00 | 620 00 | 615 00 | 370 00 | 620 00 | 615 00 |
| BT | | 480 00 | 620 00 | 616 20 | 488 59 | 621 10 | 621 10 | | | |
| GR | 620 0 | 0 00 | 615 00 | 15 00 | 611 00 | 25 31 | 611 09 | 30 42 | 611 03 | 36 05 |
| GR | 610 95 | 39 56 | 610 9 | 44 55 | 611 05 | 49 52 | 611 09 | 50 76 | 607 00 | 54 00 |
| GR | 607 20 | 56 04 | 602 50 | 59 00 | 600 64 | 66 62 | 600 0 | 72 95 | 599 69 | 77 94 |
| GR | 598 42 | 96 09 | 598 40 | 102 95 | 598 63 | 111 78 | 599 2 | 125 30 | 599 99 | 143 90 |
| GR | 599 9 | 144 0 | 600 00 | 146 74 | 600 09 | 151 00 | 600 09 | 151 10 | 600 21 | 156 78 |
| GR | 597 30 | 169 49 | 595 81 | 177 48 | 594 6 | 184 08 | 589 57 | 200 83 | 589 57 | 200 93 |
| GR | 588 46 | 207 64 | 588 46 | 207 74 | 588 90 | 216 32 | 589 07 | 220 60 | 588 9 | 244 21 |
| GR | 588 89 | 244 27 | 588 89 | 244 39 | 588 90 | 244 64 | 589 43 | 265 84 | 589 43 | 265 94 |
| GR | 591 0 | 270 27 | 591 59 | 272 90 | 591 60 | 273 00 | 593 93 | 279 22 | 595 84 | 290 48 |
| GR | 596 90 | 297 00 | 597 40 | 299 71 | 597 4 | 300 67 | 599 70 | 341 22 | 600 42 | 349 97 |
| GR | 600 70 | 352 09 | 603 14 | 362 61 | 603 8 | 365 67 | 603 98 | 366 41 | 604 20 | 368 00 |
| GR | 604 40 | 370 00 | 604 75 | 381 42 | 605 00 | 383 38 | 605 38 | 388 51 | 606 4 | 391 30 |
| GR | 606 80 | 394 98 | 607 04 | 397 30 | 607 80 | 403 84 | 608 08 | 405 33 | 609 3 | 412 19 |
| GR | 609 43 | 413 81 | 610 70 | 419 25 | 610 80 | 421 09 | 612 60 | 441 23 | 613 1 | 445 77 |
| GR | 613 42 | 451 71 | 614 05 | 462 87 | 614 10 | 463 00 | 614 06 | 463 11 | 613 7 | 473 40 |
| GR | 614 07 | 475 39 | 614 20 | 476 42 | 616 20 | 480 00 | 621 10 | 488 59 | | |

END OF PROPOSED BRIDGE CROSSING MODEL

| | | | | | | | | | | |
|---|---|---|---|---|---|---|---|---|---|---|
| NH | 7 | 03 | 74 54 | 02 | 143 43 | 045 | 269 08 | 02 | 378 58 | 03 |
| NH | 438 0 | 018 | 459 38 | 03 | 469 93 | | | | | |
| X1 | 2900 | 59 | 154 05 | 269 08 | 1 | 1 | 1 | | | |
| GR | 619 7 | 0 00 | 610 56 | 32 17 | 610 62 | 43 81 | 610 57 | 46 70 | 610 27 | 57 88 |
| GR | 602 2 | 74 54 | 600 74 | 77 94 | 600 81 | 94 69 | 600 80 | 97 37 | 600 82 | 97 78 |
| GR | 600 8 | 98 35 | 600 84 | 111 71 | 600 38 | 143 43 | 600 38 | 143 58 | 596 44 | 154 05 |
| GR | 595 2 | 157 33 | 593 69 | 160 88 | 593 06 | 162 97 | 589 98 | 174 53 | 588 50 | 180 02 |

| | | | | | | | | | | |
|---|---|---|---|---|---|---|---|---|---|---|
| GR | 589 0 | 196 05 | 589 15 | 200 20 | 589 13 | 201 88 | 589 21 | 221 10 | 589 27 | 224 61 |
| GR | 589 4 | 238 16 | 589 45 | 240 38 | 589 69 | 241 11 | 593 77 | 253 08 | 594 46 | 258 23 |
| GR | 596 0 | 269 08 | 596 83 | 274 43 | 597 96 | 290 72 | 599 06 | 317 13 | 600 11 | 336 52 |
| GR | 600 4 | 342 97 | 601 21 | 357 10 | 601 51 | 361 46 | 601 60 | 362 21 | 601 98 | 365 09 |
| GR | 603 7 | 378 58 | 604 95 | 386 70 | 604 98 | 386 85 | 607 44 | 394 35 | 608 87 | 398 20 |
| GR | 609 9 | 400 70 | 612 80 | 408 76 | 612 81 | 408 81 | 612 81 | 408 85 | 613 97 | 421 48 |
| GR | 614 5 | 429 65 | 615 36 | 438 00 | 615 45 | 442 34 | 615 56 | 449 38 | 615 37 | 459 38 |
| GR | 615 4 | 459 89 | 615 38 | 460 07 | 615 79 | 464 11 | 620 23 | 469 93 | | |

| | | | | | | | | | | |
|---|---|---|---|---|---|---|---|---|---|---|
| NH | 3 | 0 045 | 42 00 | 02 | 55 00 | 0 045 | 394 22 | | | |
| ET | | 9 1 | | | | | | | | 324 00 |
| X1 | 3000 | 44 | 59 80 | 145 06 | 205 31 | 233 92 | 228 00 | | | |
| GR | 614 0 | 0 00 | 613 05 | 2 80 | 610 39 | 11 59 | 602 23 | 35 06 | 599 75 | 42 00 |
| GR | 599 6 | 55 00 | 598 26 | 57 36 | 598 23 | 59 27 | 597 72 | 59 80 | 593 05 | 64 57 |
| GR | 589 1 | 69 76 | 589 22 | 92 91 | 589 28 | 106 83 | 589 32 | 111 46 | 590 81 | 116 18 |
| GR | 595 9 | 132 97 | 596 00 | 144 98 | 596 00 | 145 06 | 596 22 | 186 99 | 596 88 | 221 91 |
| GR | 597 3 | 232 41 | 597 63 | 252 80 | 597 92 | 258 38 | 599 80 | 283 73 | 600 09 | 288 24 |
| GR | 600 8 | 291 39 | 603 07 | 307 27 | 603 21 | 313 29 | 603 55 | 318 05 | 604 25 | 326 80 |
| GR | 605 2 | 333 90 | 605 85 | 338 11 | 608 67 | 351 40 | 609 22 | 353 90 | 611 39 | 358 06 |
| GR | 613 0 | 361 17 | 614 78 | 371 67 | 615 34 | 374 24 | 616 52 | 382 30 | 619 41 | 392 04 |
| GR | 619 5 | 392 46 | 619 61 | 392 86 | 619 69 | 393 25 | 620 03 | 394 22 | | |

| | | | | | | | | | | |
|---|---|---|---|---|---|---|---|---|---|---|
| NC | 0 045 | 0 045 | 0 045 | | | | | | | |
| ET | | 9 1 | | | | | | | 119 00 | 658 05 |
| X1 | 3100 | 58 | 243 32 | 456 99 | 278 47 | 73 46 | 177 00 | | | |
| GR | 620 0 | 0 00 | 618 91 | 5 65 | 618 88 | 11 51 | 617 22 | 22 73 | 615 63 | 33 49 |
| GR | 615 2 | 39 00 | 615 20 | 39 10 | 613 07 | 71 90 | 613 07 | 72 00 | 612 64 | 77 86 |
| GR | 611 7 | 89 80 | 608 60 | 109 47 | 608 49 | 113 29 | 608 23 | 122 76 | 607 09 | 139 29 |
| GR | 606 7 | 150 12 | 604 10 | 180 16 | 603 73 | 188 98 | 603 16 | 199 77 | 601 29 | 237 23 |
| GR | 599 9 | 243 32 | 590 00 | 287 93 | 589 76 | 288 85 | 589 77 | 289 60 | 589 75 | 290 07 |
| GR | 589 7 | 291 22 | 589 60 | 295 87 | 590 07 | 302 75 | 590 07 | 325 65 | 590 83 | 333 56 |
| GR | 593 6 | 371 76 | 593 40 | 431 44 | 593 49 | 438 28 | 593 61 | 443 21 | 593 93 | 454 29 |
| GR | 594 0 | 456 99 | 594 10 | 458 33 | 595 54 | 479 29 | 597 20 | 502 65 | 597 22 | 503 59 |
| GR | 597 5 | 506 72 | 598 30 | 518 76 | 598 75 | 528 21 | 599 14 | 537 06 | 599 66 | 549 42 |
| GR | 599 8 | 552 05 | 599 80 | 553 02 | 599 88 | 554 15 | 600 00 | 556 96 | 600 67 | 570 10 |
| GR | 601 2 | 573 43 | 602 24 | 586 00 | 612 00 | 586 00 | 612 00 | 619 85 | 609 78 | 619 85 |
| GR | 612 33 | 627 08 | 617 80 | 649 37 | 620 00 | 658 15 | | | | |

| | | | | | | | | | | |
|---|---|---|---|---|---|---|---|---|---|---|
| X1 | 3200 | 29 | 93 30 | 223 49 | 349 78 | 243 92 | 308 00 | | | |
| GR | 620 0 | 0 00 | 618 62 | 3 66 | 617 31 | 7 65 | 614 53 | 15 53 | 614 36 | 16 03 |
| GR | 614 2 | 16 84 | 608 77 | 39 01 | 603 20 | 65 69 | 601 01 | 82 10 | 600 65 | 86 92 |
| GR | 600 1 | 93 30 | 597 95 | 116 02 | 596 41 | 123 99 | 596 07 | 126 34 | 596 00 | 126 58 |
| GR | 595 5 | 128 37 | 592 80 | 134 51 | 589 71 | 142 06 | 589 74 | 144 04 | 590 00 | 169 07 |
| GR | 590 1 | 176 60 | 590 95 | 187 95 | 593 89 | 223 49 | 595 85 | 247 20 | 596 05 | 257 58 |
| GR | 596 8 | 261 37 | 602 60 | 297 47 | 613 98 | 359 30 | 619 75 | 381 22 | | |

| | | | | | | | | | | |
|---|---|---|---|---|---|---|---|---|---|---|
| X1 | 3300 | 31 | 133 37 | 249 22 | 153 29 | 147 95 | 187 00 | | | |
| GR | 620 0 | 0 00 | 619 40 | 2 27 | 617 19 | 11 38 | 617 24 | 11 45 | 614 92 | 25 04 |
| GR | 613 8 | 29 17 | 613 20 | 38 39 | 613 01 | 41 62 | 612 74 | 43 63 | 611 72 | 49 02 |
| GR | 609 8 | 63 58 | 606 03 | 88 52 | 600 48 | 133 37 | 599 89 | 138 12 | 597 95 | 150 86 |
| GR | 595 1 | 168 87 | 590 38 | 185 96 | 589 73 | 187 83 | 589 76 | 190 48 | 590 05 | 208 07 |
| GR | 595 8 | 239 76 | 597 46 | 249 22 | 601 95 | 274 14 | 607 42 | 306 00 | 611 36 | 326 78 |
| GR | 612 9 | 341 95 | 612 95 | 342 18 | 613 49 | 344 45 | 616 01 | 355 44 | 616 04 | 356 87 |
| GR | 619 9 | 371 54 | | | | | | | | |

| | | | | | | | | | | |
|---|---|---|---|---|---|---|---|---|---|---|
| X1 | 3400 | 63 | 307 38 | 469 34 | 253 72 | 163 10 | 167 00 | | | |
| GR | 620 0 | 0 00 | 618 88 | 12 07 | 618 94 | 12 28 | 619 05 | 12 66 | 619 84 | 16 18 |
| GR | 619 8 | 17 60 | 619 76 | 18 80 | 619 54 | 19 18 | 618 60 | 22 07 | 618 22 | 22 95 |
| GR | 618 2 | 23 04 | 617 35 | 28 47 | 617 11 | 30 28 | 615 92 | 43 72 | 615 07 | 53 63 |
| GR | 614 5 | 57 52 | 614 01 | 64 99 | 612 76 | 75 41 | 611 19 | 93 93 | 610 34 | 106 11 |
| GR | 609 5 | 116 05 | 608 81 | 126 74 | 607 79 | 140 27 | 607 75 | 146 47 | 607 40 | 155 56 |
| GR | 606 4 | 172 86 | 606 17 | 175 77 | 604 57 | 193 56 | 604 41 | 196 66 | 603 86 | 214 79 |
| GR | 603 8 | 217 34 | 603 61 | 220 24 | 602 83 | 231 74 | 602 02 | 260 93 | 601 00 | 281 72 |
| GR | 600 6 | 290 30 | 599 87 | 307 38 | 599 73 | 310 66 | 598 36 | 332 14 | 595 39 | 372 31 |
| GR | 595 1 | 376 13 | 591 94 | 376 90 | 590 13 | 390 46 | 589 73 | 392 02 | 589 80 | 394 39 |
| GR | 589 7 | 402 54 | 589 79 | 403 86 | 589 83 | 405 05 | 590 05 | 406 05 | 598 53 | 460 87 |
| GR | 599 5 | 468 05 | 599 85 | 469 34 | 601 24 | 474 98 | 606 31 | 495 07 | 607 46 | 502 36 |
| GR | 608 8 | 511 03 | 609 61 | 515 82 | 615 18 | 547 97 | 615 55 | 550 17 | 615 68 | 550 91 |
| GR | 615 8 | 551 38 | 617 76 | 556 97 | 620 04 | 564 03 | | | | |

| | | | | | | | | | | |
|---|---|---|---|---|---|---|---|---|---|---|
| X1 | 3500 | 57 | 154 52 | 305 83 | 253 02 | 129 19 | 155 00 | | | |
| GR | 619 9 | 0 00 | 618 96 | 2 98 | 617 95 | 4 48 | 617 62 | 5 48 | 617 47 | 6 00 |
| GR | 617 0 | 7 65 | 616 85 | 11 34 | 616 81 | 17 85 | 614 63 | 18 98 | 614 56 | 18 99 |
| GR | 614 5 | 19 07 | 614 01 | 21 59 | 614 01 | 21 70 | 613 67 | 28 37 | 613 55 | 29 57 |
| GR | 613 3 | 37 90 | 613 26 | 38 58 | 613 54 | 56 48 | 613 54 | 56 50 | 613 55 | 57 22 |
| GR | 613 5 | 58 96 | 613 08 | 82 79 | 612 46 | 86 82 | 611 72 | 90 51 | 611 22 | 91 94 |
| GR | 608 7 | 96 32 | 608 44 | 100 71 | 607 56 | 110 72 | 607 09 | 115 10 | 605 97 | 120 20 |
| GR | 604 6 | 131 50 | 602 57 | 141 92 | 598 95 | 154 52 | 595 30 | 167 22 | 590 60 | 196 16 |
| GR | 588 8 | 211 27 | 588 82 | 227 61 | 588 81 | 230 41 | 591 05 | 239 74 | 592 01 | 243 63 |
| GR | 592 1 | 244 11 | 592 19 | 244 88 | 594 47 | 267 40 | 595 86 | 275 84 | 599 03 | 298 43 |
| GR | 600 2 | 305 83 | 600 78 | 309 96 | 603 04 | 319 33 | 604 88 | 325 04 | 605 17 | 332 25 |
| GR | 605 2 | 333 13 | 605 61 | 334 52 | 608 66 | 344 35 | 611 90 | 358 34 | 613 85 | 363 65 |
| GR | 618 9 | 375 13 | 620 00 | 381 54 | | | | | | |

| | | | | | | | | | | |
|---|---|---|---|---|---|---|---|---|---|---|
| X1 | 3600 | 68 | 237 09 | 363 79 | 182 65 | 220 76 | 207 00 | | | |
| GR | 620 2 | 0 00 | 619 82 | 1 83 | 619 40 | 3 12 | 618 91 | 4 29 | 618 80 | 4 74 |
| GR | 618 8 | 6 21 | 618 59 | 10 01 | 616 78 | 10 33 | 616 60 | 10 59 | 616 26 | 12 29 |
| GR | 615 5 | 14 76 | 615 65 | 20 80 | 615 60 | 22 02 | 615 58 | 22 28 | 615 48 | 22 35 |
| GR | 613 2 | 23 39 | 613 03 | 24 30 | 612 68 | 26 16 | 612 73 | 28 93 | 612 75 | 33 40 |
| GR | 612 6 | 34 81 | 612 29 | 36 31 | 612 24 | 48 63 | 612 17 | 53 84 | 612 05 | 65 47 |
| GR | 612 6 | 72 28 | 612 77 | 75 42 | 612 65 | 80 84 | 612 03 | 101 75 | 611 25 | 118 30 |
| GR | 611 2 | 120 11 | 611 16 | 123 45 | 611 17 | 145 24 | 611 44 | 164 62 | 611 53 | 169 95 |
| GR | 611 5 | 174 51 | 611 23 | 189 92 | 611 07 | 203 69 | 611 10 | 211 52 | 602 44 | 232 08 |
| GR | 600 4 | 237 09 | 593 70 | 253 60 | 590 59 | 288 24 | 589 39 | 302 06 | 589 30 | 307 65 |
| GR | 589 2 | 312 06 | 589 14 | 319 38 | 589 70 | 322 92 | 598 08 | 358 16 | 600 56 | 363 79 |
| GR | 612 9 | 391 67 | 613 22 | 392 48 | 613 22 | 392 55 | 613 75 | 399 69 | 613 76 | 401 63 |

| | | | | | | | | | | | |
|---|---|---|---|---|---|---|---|---|---|---|---|
| GR | 613 8 | 410 13 | 613 80 | 411 31 | 613 69 | 415 45 | 613 50 | 424 05 | 613 12 | 424 92 | |
| GR | 612 0 | 427 20 | 611 26 | 428 93 | 612 00 | 430 75 | 614 20 | 434 19 | 615 87 | 436 56 | |
| GR | 618 1 | 439 57 | 619 66 | 442 12 | 619 89 | 442 34 | | | | | |

| | | | | | | | | | | | |
|---|---|---|---|---|---|---|---|---|---|---|---|
| X1 | 3700 | 80 | 238 79 | 399 52 | 201 21 | 450 21 | 330 00 | | | | |
| GR | 620 0 | 0 00 | 619 08 | 3 64 | 619 39 | 4 19 | 619 10 | 6 95 | 618 61 | 8 43 | |
| GR | 618 4 | 12 68 | 616 02 | 14 63 | 614 55 | 17 32 | 613 84 | 23 76 | 613 36 | 27 57 | |
| GR | 612 6 | 33 42 | 612 46 | 34 44 | 612 28 | 37 18 | 612 28 | 44 23 | 612 11 | 51 40 | |
| GR | 611 8 | 61 47 | 611 31 | 73 69 | 611 09 | 80 43 | 610 32 | 98 78 | 610 27 | 104 40 | |
| GR | 610 3 | 113 46 | 610 28 | 119 41 | 610 33 | 122 59 | 610 27 | 125 19 | 610 51 | 140 34 | |
| GR | 610 5 | 142 02 | 610 52 | 142 47 | 610 70 | 180 74 | 611 43 | 191 21 | 611 16 | 199 12 | |
| GR | 611 1 | 203 42 | 611 09 | 205 01 | 611 11 | 206 75 | 610 06 | 215 28 | 609 64 | 217 74 | |
| GR | 609 7 | 219 61 | 604 33 | 238 15 | 604 12 | 238 79 | 594 20 | 269 69 | 590 39 | 298 62 | |
| GR | 590 3 | 299 33 | 590 29 | 300 16 | 590 31 | 302 06 | 590 43 | 326 44 | 590 71 | 340 03 | |
| GR | 591 7 | 347 36 | 593 21 | 358 34 | 595 00 | 371 35 | 595 67 | 377 81 | 595 59 | 378 94 | |
| GR | 597 1 | 385 00 | 600 35 | 397 94 | 600 63 | 399 52 | 601 21 | 402 72 | 602 70 | 414 00 | |
| GR | 603 6 | 426 84 | 603 91 | 430 67 | 604 66 | 439 46 | 604 75 | 440 31 | 606 06 | 460 95 | |
| GR | 606 1 | 461 56 | 606 16 | 462 06 | 607 42 | 478 41 | 608 31 | 489 12 | 608 97 | 494 96 | |
| GR | 610 0 | 503 00 | 611 48 | 513 55 | 611 89 | 518 20 | 612 12 | 520 16 | 613 15 | 533 80 | |
| GR | 613 1 | 546 98 | 614 04 | 554 73 | 614 48 | 558 05 | 615 39 | 561 98 | 618 88 | 576 81 | |
| GR | 621 8 | 588 46 | 623 28 | 594 15 | 625 12 | 600 43 | 628 44 | 612 20 | 630 00 | 618 12 | |

| | | | | | | | | | | | |
|---|---|---|---|---|---|---|---|---|---|---|---|
| X1 | 3800 | 69 | 175 26 | 408 43 | 159 69 | 498 78 | 260 00 | | | | |
| GR | 620 1 | 0 00 | 618 02 | 1 36 | 616 85 | 3 80 | 616 93 | 10 94 | 617 02 | 15 93 | |
| GR | 617 1 | 20 23 | 617 14 | 26 91 | 616 07 | 32 54 | 614 73 | 37 14 | 613 46 | 43 45 | |
| GR | 610 9 | 61 78 | 610 22 | 66 83 | 608 14 | 82 13 | 607 20 | 87 83 | 607 10 | 89 68 | |
| GR | 607 0 | 90 65 | 605 90 | 111 02 | 605 55 | 118 13 | 605 27 | 125 12 | 605 28 | 132 42 | |
| GR | 605 6 | 146 35 | 605 89 | 156 15 | 603 87 | 175 26 | 601 19 | 200 51 | 597 97 | 224 80 | |
| GR | 593 8 | 263 93 | 592 48 | 284 98 | 591 67 | 296 75 | 591 74 | 303 85 | 591 92 | 321 68 | |
| GR | 592 0 | 324 37 | 593 90 | 368 55 | 594 88 | 373 93 | 595 02 | 375 01 | 598 97 | 397 96 | |
| GR | 600 4 | 408 43 | 601 83 | 419 13 | 608 05 | 447 79 | 608 10 | 460 90 | 608 18 | 462 43 | |
| GR | 609 7 | 479 68 | 611 03 | 493 76 | 611 83 | 503 57 | 612 35 | 513 87 | 613 19 | 518 90 | |
| GR | 613 0 | 521 74 | 613 13 | 523 19 | 612 90 | 525 41 | 613 09 | 526 83 | 613 20 | 529 88 | |
| GR | 613 3 | 540 90 | 614 10 | 552 46 | 614 24 | 554 20 | 614 16 | 555 69 | 613 98 | 564 78 | |
| GR | 613 6 | 580 94 | 613 44 | 593 37 | 613 20 | 600 68 | 613 39 | 610 58 | 613 58 | 624 50 | |
| GR | 614 5 | 641 69 | 615 25 | 652 98 | 615 84 | 662 42 | 616 58 | 672 06 | 617 85 | 688 68 | |
| GR | 618 5 | 694 83 | 619 87 | 709 54 | 619 92 | 709 91 | 620 00 | 710 50 | | | |

| | | | | | | | | | | | |
|---|---|---|---|---|---|---|---|---|---|---|---|
| X1 | 4000 | 66 | 121 74 | 358 71 | 350 29 | 549 02 | 452 00 | | | | |
| GR | 619 9 | 0 00 | 618 62 | 7 83 | 617 15 | 17 94 | 615 85 | 24 16 | 614 80 | 29 54 | |
| GR | 613 7 | 33 55 | 613 59 | 36 68 | 613 56 | 43 04 | 613 27 | 53 58 | 612 59 | 60 96 | |
| GR | 612 0 | 70 76 | 611 17 | 77 14 | 610 89 | 81 62 | 610 37 | 91 15 | 610 26 | 94 00 | |
| GR | 609 8 | 98 71 | 608 85 | 107 97 | 608 63 | 109 80 | 608 63 | 110 71 | 607 43 | 113 47 | |
| GR | 604 8 | 119 04 | 604 33 | 120 58 | 603 96 | 121 74 | 602 10 | 127 60 | 601 93 | 128 76 | |
| GR | 600 2 | 140 32 | 596 40 | 191 05 | 595 71 | 199 86 | 595 45 | 202 83 | 595 29 | 204 53 | |
| GR | 595 0 | 207 83 | 593 71 | 275 78 | 593 64 | 281 54 | 593 70 | 297 99 | 594 87 | 300 90 | |
| GR | 594 8 | 301 14 | 594 70 | 301 59 | 593 38 | 306 34 | 593 39 | 308 37 | 593 39 | 308 97 | |
| GR | 593 4 | 313 10 | 593 43 | 315 39 | 593 45 | 318 03 | 593 46 | 319 69 | 593 47 | 320 99 | |
| GR | 593 5 | 329 03 | 593 52 | 330 04 | 593 99 | 331 34 | 594 95 | 334 93 | 595 81 | 337 48 | |
| GR | 598 9 | 345 30 | 600 07 | 347 13 | 602 72 | 352 01 | 607 40 | 358 71 | 608 96 | 360 94 | |
| GR | 609 2 | 362 19 | 611 50 | 371 26 | 611 95 | 374 15 | 613 24 | 382 19 | 613 40 | 383 60 | |

GR 613 7 387 01 613 83 388 70 613 94 390 34 614 27 395 20 615 10 401 81
GR 616 0 407 37

| | | | | | | | | | |
|---|---|---|---|---|---|---|---|---|---|
| SECNO | DEPTH | CWSEL | CRIWS | WSELK | EG | HV | HL | OLOSS | L-BANK ELEV |
| Q | QLOB | QCH | QROB | ALOB | ACH | AROB | VOL | TWA | R-BANK ELEV |
| TIME | VLOB | VCH | VROB | XNL | XNCH | XNR | WTN | ELMIN | SSTA |
| SLOPE | XLOBL | XLCH | XLOBR | ITRIAL | IDC | ICONT | CORAR | TOPWID | ENDST |

*PROF 1

CRITICAL DEPTH TO BE CALCULATED AT ALL CROSS SECTIONS

CCHV= 100 CEHV= 300

*SECNO 100 000

| | | | | | | | | | |
|---|---|---|---|---|---|---|---|---|---|
| 100 000 | 17 50 | 559 00 | 556 19 | 559 00 | 560 33 | 1 33 | 00 | 00 | 548 82 |
| 19000 0 | 7468 3 | 10125 0 | 1406 7 | 1087 0 | 910 4 | 396 5 | 0 | 0 | 550 14 |
| 00 | 6 87 | 11 12 | 3 55 | 045 | 040 | 060 | 000 | 541 50 | 23 57 |
| 002564 | 0 | 0 | 0 | 0 | 11 | 0 | 00 | 289 99 | 313 56 |

FLOW DISTRIBUTION FOR SECNO= 100 00 CWSEL= 559 00

| STA= | 24 | 57 | 71 | 82 | 108 | 139 | 163 | 164 | 223 | 250 | 287 | 314 |
|---|---|---|---|---|---|---|---|---|---|---|---|---|
| PER Q= | 3 7 | 4 1 | 3 3 | 8 3 | 10 8 | 8 7 | 3 | 53 3 | 3 3 | 3 1 | 1 0 | |
| AREA= | 142 2 | 116 3 | 90 2 | 225 9 | 281 1 | 222 5 | 8 7 | 910 4 | 156 5 | 170 6 | 69 5 | |
| VEL= | 4 9 | 6 7 | 6 9 | 7 0 | 7 3 | 7 5 | 7 0 | 11 1 | 4 0 | 3 5 | 2 6 | |
| DEPTH= | 4 3 | 8 0 | 8 4 | 8 6 | 9 2 | 9 4 | 9 9 | 15 3 | 5 7 | 4 6 | 2 6 | |

*SECNO 200 000

| | | | | | | | | | |
|---|---|---|---|---|---|---|---|---|---|
| 200 000 | 18 02 | 559 72 | 555 39 | 00 | 560 55 | 83 | 18 | 05 | 548 12 |
| 19000 0 | 11263 4 | 6697 5 | 1039 1 | 1782 1 | 735 8 | 271 5 | 4 9 | 5 | 549 90 |
| 00 | 6 32 | 9 10 | 3 83 | 045 | 040 | 060 | 000 | 541 70 | 19 88 |
| 001709 | 50 | 118 | 133 | 2 | 14 | 0 | 00 | 277 23 | 297 10 |

FLOW DISTRIBUTION FOR SECNO= 200 00 CWSEL= 559 72

| STA= | 20 | 60 | 83 | 101 | 116 | 134 | 143 | 163 | 174 | 186 | 206 | 208 | 256 |
|---|---|---|---|---|---|---|---|---|---|---|---|---|---|
| PER Q= | 5 8 | 6 4 | 5 8 | 5 3 | 6 2 | 3 3 | 8 2 | 4 3 | 4 7 | 8 0 | 1 2 | 35 3 | |
| AREA= | 231 3 | 204 3 | 177 5 | 157 5 | 182 4 | 93 9 | 228 5 | 120 1 | 133 1 | 222 0 | 31 6 | 735 8 | |
| VEL= | 4 8 | 6 0 | 6 2 | 6 4 | 6 5 | 6 6 | 6 8 | 6 9 | 6 8 | 6 8 | 6 9 | 9 1 | |
| DEPTH= | 5 7 | 9 2 | 9 8 | 10 2 | 10 4 | 10 6 | 11 1 | 11 3 | 11 0 | 11 2 | 11 5 | 15 4 | |

| STA= | 256 | 280 | 297 |
|---|---|---|---|
| PER Q= | 4 3 | 1 2 | |
| AREA= | 194 3 | 77 2 | |
| VEL= | 4 2 | 3 0 | |
| DEPTH= | 8 3 | 4 4 | |

| | | | | | | | | | |
|---|---|---|---|---|---|---|---|---|---|
| SECNO | DEPTH | CWSEL | CRIWS | WSELK | EG | HV | HL | OLOSS | L-BANK ELEV |
| Q | QLOB | QCH | QROB | ALOB | ACH | AROB | VOL | TWA | R-BANK ELEV |
| TIME | VLOB | VCH | VROB | XNL | XNCH | XNR | WTN | ELMIN | SSTA |
| SLOPE | XLOBL | XLCH | XLOBR | ITRIAL | IDC | ICONT | CORAR | TOPWID | ENDST |

*SECNO 400 000

3301 HV CHANGED MORE THAN HVINS

3302 WARNING CONVEYANCE CHANGE OUTSIDE OF ACCEPTABLE RANGE, KRATIO = 66

| | | | | | | | | | |
|---|---|---|---|---|---|---|---|---|---|
| 400 000 | 16 65 | 559 45 | 557 48 | 00 | 561 16 | 1 71 | 34 | 26 | 548 00 |
| 19000 0 | 8949 1 | 8113 8 | 1937 1 | 1098 3 | 607 7 | 356 3 | 12 3 | 1 3 | 550 20 |
| 01 | 8 15 | 13 35 | 5 44 | 045 | 040 | 060 | 000 | 542 80 | 31 33 |
| 003963 | 93 | 184 | 211 | 3 | 15 | 0 | 00 | 252 83 | 284 15 |

FLOW DISTRIBUTION FOR SECNO= 400 00 CWSEL= 559 45

| STA= | 31 | 70 | 100 | 110 | 142 | 153 | 161 | 173 | 182 | 185 | 225 | 245 | 265 |
|---|---|---|---|---|---|---|---|---|---|---|---|---|---|
| PER Q= | 4 6 | 7 7 | 3 2 | 12 2 | 5 1 | 3 5 | 5 6 | 4 3 | 1 0 | 42 7 | 4 8 | 4 1 | |
| AREA= | 152 5 | 197 3 | 75 0 | 269 2 | 106 2 | 72 9 | 114 8 | 86 9 | 23 6 | 607 7 | 155 5 | 137 2 | |
| VEL= | 5 7 | 7 4 | 8 0 | 8 6 | 9 2 | 9 2 | 9 2 | 9 3 | 8 2 | 13 4 | 5 9 | 5 7 | |
| DEPTH= | 3 9 | 6 7 | 7 5 | 8 5 | 9 2 | 9 3 | 9 3 | 9 5 | 10 4 | 15 2 | 7 5 | 7 1 | |

| STA= | 265 | 284 |
|---|---|---|
| PER Q= | 1 2 | |
| AREA= | 63 7 | |
| VEL= | 3 7 | |
| DEPTH= | 3 3 | |

*SECNO 500 000

3301 HV CHANGED MORE THAN HVINS

| | | | | | | | | | |
|---|---|---|---|---|---|---|---|---|---|
| 500 000 | 17 21 | 560 52 | 557 63 | 00 | 561 62 | 1 10 | 40 | 06 | 549 99 |
| 19000 0 | 4666 1 | 7377 2 | 6956 8 | 541 5 | 832 7 | 893 1 | 19 3 | 2 3 | 552 30 |
| 01 | 8 62 | 8 86 | 7 79 | 030 | 045 | 030 | 000 | 543 31 | 21 86 |
| 002122 | 73 | 160 | 207 | 3 | 14 | 0 | 00 | 342 70 | 364 56 |

FLOW DISTRIBUTION FOR SECNO= 500 00 CWSEL= 560 52

| | | | | | | | | | |
|---|---|---|---|---|---|---|---|---|---|
| SECNO | DEPTH | CWSEL | CRIWS | WSELK | EG | HV | HL | OLOSS | L-BANK ELEV |
| Q | QLOB | QCH | QROB | ALOB | ACH | AROB | VOL | TWA | R-BANK ELEV |
| TIME | VLOB | VCH | VROB | XNL | XNCH | XNR | WTN | ELMIN | SSTA |
| SLOPE | XLOBL | XLCH | XLOBR | ITRIAL | IDC | ICONT | CORAR | TOPWID | ENDST |

| STA= | 22 | 50 | 65 | 82 | 90 | 105 | 160 | 174 | 189 | 206 | 219 | 228 | 238 |
|---|---|---|---|---|---|---|---|---|---|---|---|---|---|
| PER Q= | 3 2 | 4 3 | 5 9 | 3 4 | 7 8 | 38 8 | 5 2 | 4 5 | 5 3 | 4 4 | 3 6 | 4 1 | |
| AREA= | 102 5 | 100 7 | 127 1 | 68 0 | 143 2 | 832 7 | 112 1 | 102 3 | 122 7 | 95 4 | 71 7 | 86 1 | |
| VEL= | 5 9 | 8 1 | 8 9 | 9 5 | 10 3 | 8 9 | 8 8 | 8 4 | 8 3 | 8 7 | 9 4 | 9 0 | |
| DEPTH= | 3 6 | 6 7 | 7 7 | 8 5 | 9 6 | 15 2 | 7 6 | 7 1 | 6 9 | 7 5 | 8 4 | 8 0 | |

| STA= | 238 | 257 | 286 | 365 |
|---|---|---|---|---|
| PER Q= | 5 3 | 3 2 | 9 | |
| AREA= | 123 3 | 106 5 | 73 1 | |
| VEL= | 8 2 | 5 8 | 2 4 | |
| DEPTH= | 6 8 | 3 7 | 9 | |

*SECNO 600 000

3301 HV CHANGED MORE THAN HVINS

7185 MINIMUM SPECIFIC ENERGY
3720 CRITICAL DEPTH ASSUMED

| | | | | | | | | | |
|---|---|---|---|---|---|---|---|---|---|
| 600 000 | 13 83 | 560 43 | 560 43 | 00 | 563 00 | 2 57 | 56 | 44 | 552 07 |
| 19000 0 | 1372 8 | 9897 1 | 7730 2 | 110 4 | 706 8 | 682 1 | 26 3 | 3 5 | 552 20 |
| 02 | 12 43 | 14 00 | 11 33 | 030 | 045 | 030 | 000 | 546 60 | 32 55 |
| 006849 | 131 | 165 | 169 | 0 | 15 | 0 | 00 | 282 10 | 314 64 |

FLOW DISTRIBUTION FOR SECNO= 600 00 CWSEL= 560 43

| STA= | 33 | 54 | 57 | 116 | 145 | 171 | 187 | 210 | 234 | 315 |
|---|---|---|---|---|---|---|---|---|---|---|
| PER Q= | 5 6 | 1 7 | 52 1 | 13 2 | 9 9 | 5 8 | 5 8 | 3 2 | 2 7 | |
| AREA= | 90 9 | 19 5 | 706 8 | 183 2 | 144 1 | 88 9 | 100 8 | 70 3 | 94 7 | |
| VEL= | 11 6 | 16 2 | 14 0 | 13 7 | 13 1 | 12 5 | 11 0 | 8 5 | 5 4 | |
| DEPTH= | 4 2 | 8 1 | 11 9 | 6 2 | 5 7 | 5 3 | 4 4 | 2 9 | 1 2 | |

*SECNO 700 000

3301 HV CHANGED MORE THAN HVINS

3302 WARNING CONVEYANCE CHANGE OUTSIDE OF ACCEPTABLE RANGE, KRATIO = 1 96

| | | | | | | | | | |
|---|---|---|---|---|---|---|---|---|---|
| 700 000 | 15 15 | 563 25 | 561 13 | 00 | 563 95 | 70 | 76 | 19 | 554 16 |
| 19000 0 | 533 1 | 7131 3 | 11335 5 | 84 8 | 942 2 | 1838 6 | 38 5 | 5 6 | 556 00 |
| 03 | 6 29 | 7 57 | 6 17 | 030 | 045 | 030 | 000 | 548 10 | 51 14 |
| 001774 | 241 | 253 | 237 | 3 | 10 | 0 | 00 | 490 32 | 541 46 |

| | | | | | | | | | |
|---|---|---|---|---|---|---|---|---|---|
| SECNO | DEPTH | CWSEL | CRIWS | WSELK | EG | HV | HL | OLOSS | L-BANK ELEV |
| Q | QLOB | QCH | QROB | ALOB | ACH | AROB | VOL | TWA | R-BANK ELEV |
| TIME | VLOB | VCH | VROB | XNL | XNCH | XNR | WTN | ELMIN | SSTA |
| SLOPE | XLOBL | XLCH | XLOBR | ITRIAL | IDC | ICONT | CORAR | TOPWID | ENDST |

FLOW DISTRIBUTION FOR SECNO= 700 00 CWSEL= 563 25

| STA= | 51 | 69 | 141 | 175 | 205 | 232 | 244 | 261 | 281 | 325 | 356 | 384 | 413 |
|---|---|---|---|---|---|---|---|---|---|---|---|---|---|
| PER Q= | 2 8 | 37 5 | 8 6 | 7 0 | 6 5 | 3 2 | 4 3 | 4 4 | 6 7 | 3 0 | 3 1 | 3 5 | |
| AREA= | 84 8 | 942 2 | 223 6 | 186 3 | 172 7 | 83 6 | 112 4 | 119 5 | 212 9 | 114 0 | 112 5 | 121 0 | |
| VEL= | 6 3 | 7 6 | 7 3 | 7 2 | 7 2 | 7 4 | 7 3 | 7 0 | 5 9 | 5 0 | 5 2 | 5 5 | |
| DEPTH= | 4 7 | 13 1 | 6 5 | 6 4 | 6 4 | 6 7 | 6 5 | 6 1 | 4 8 | 3 8 | 3 9 | 4 2 | |

| STA= | 413 | 440 | 475 | 541 |
|---|---|---|---|---|
| PER Q= | 3 1 | 3 4 | 2 8 | |
| AREA= | 112 2 | 128 2 | 139 5 | |
| VEL= | 5 3 | 5 0 | 3 8 | |
| DEPTH= | 4 1 | 3 7 | 2 1 | |

*SECNO 800 000

| | | | | | | | | | |
|---|---|---|---|---|---|---|---|---|---|
| 800 000 | 15 50 | 563 63 | 561 77 | 00 | 564 39 | 76 | 42 | 02 | 554 16 |
| 19000 0 | 5710 1 | 7669 3 | 5620 6 | 768 2 | 970 2 | 1129 4 | 53 6 | 8 3 | 555 70 |
| 03 | 7 43 | 7 91 | 4 98 | 030 | 045 | 030 | 000 | 548 13 | 91 52 |
| 001820 | 300 | 259 | 192 | 2 | 12 | 0 | 00 | 578 88 | 670 40 |

FLOW DISTRIBUTION FOR SECNO= 800 00 CWSEL= 563 63

| STA= | 92 | 170 | 200 | 233 | 240 | 311 | 332 | 372 | 421 | 476 | 528 | 586 | 670 |
|---|---|---|---|---|---|---|---|---|---|---|---|---|---|
| PER Q= | 5 9 | 9 6 | 11 7 | 2 8 | 40 4 | 5 5 | 5 7 | 3 9 | 3 7 | 4 1 | 4 5 | 2 1 | |
| AREA= | 218 8 | 225 9 | 263 5 | 60 0 | 970 2 | 142 3 | 182 3 | 160 4 | 162 2 | 169 3 | 186 7 | 126 2 | |
| VEL= | 5 2 | 8 1 | 8 4 | 8 8 | 7 9 | 7 4 | 5 9 | 4 6 | 4 4 | 4 6 | 4 6 | 3 2 | |
| DEPTH= | 2 8 | 7 5 | 8 0 | 8 7 | 13 8 | 6 6 | 4 7 | 3 2 | 3 0 | 3 2 | 3 2 | 1 5 | |

*SECNO 900 000

| | | | | | | | | | |
|---|---|---|---|---|---|---|---|---|---|
| 900 000 | 16 05 | 564 25 | 561 14 | 00 | 564 97 | 72 | 58 | 00 | 556 14 |
| 19000 0 | 2351 0 | 10629 0 | 6020 1 | 351 6 | 1412 0 | 1105 8 | 74 8 | 12 0 | 556 77 |
| 05 | 6 69 | 7 53 | 5 44 | 030 | 045 | 030 | 000 | 548 20 | 44 40 |
| 001700 | 326 | 362 | 275 | 2 | 12 | 0 | 00 | 505 98 | 550 38 |

FLOW DISTRIBUTION FOR SECNO= 900 00 CWSEL= 564 25

| STA= | 44 | 75 | 92 | 105 | 111 | 216 | 238 | 258 | 275 | 295 | 440 | 550 |
|---|---|---|---|---|---|---|---|---|---|---|---|---|
| PER Q= | 3 2 | 4 0 | 3 5 | 1 6 | 55 9 | 6 4 | 4 9 | 4 0 | 3 6 | 11 1 | 1 6 | |
| AREA= | 109 9 | 109 2 | 91 3 | 41 2 | 1412 0 | 160 5 | 129 8 | 110 3 | 108 0 | 471 1 | 126 2 | |
| VEL= | 5 6 | 7 0 | 7 3 | 7 5 | 7 5 | 7 6 | 7 2 | 6 9 | 6 4 | 4 5 | 2 3 | |
| DEPTH= | 3 6 | 6 3 | 6 8 | 7 3 | 13 5 | 7 2 | 6 7 | 6 2 | 5 6 | 3 2 | 1 1 | |

| | | | | | | | | | |
|---|---|---|---|---|---|---|---|---|---|
| SECNO | DEPTH | CWSEL | CRIWS | WSELK | EG | HV | HL | OLOSS | L-BANK ELEV |
| Q | QLOB | QCH | QROB | ALOB | ACH | AROB | VOL | TWA | R-BANK ELEV |
| TIME | VLOB | VCH | VROB | XNL | XNCH | XNR | WTN | ELMIN | SSTA |
| SLOPE | XLOBL | XLCH | XLOBR | ITRIAL | IDC | ICONT | CORAR | TOPWID | ENDST |

*SECNO 990 000

3470 ENCROACHMENT STATIONS= 224 0 658 0 TYPE= 1 TARGET= 434 010

| | | | | | | | | | |
|---|---|---|---|---|---|---|---|---|---|
| 990 000 | 14 88 | 564 41 | 561 23 | 00 | 565 62 | 1 20 | 50 | 14 | 555 94 |
| 19000 0 | 1898 5 | 14420 6 | 2680 9 | 222 6 | 1546 9 | 487 6 | 88 4 | 14 2 | 556 25 |
| 06 | 8 53 | 9 32 | 5 50 | 030 | 045 | 030 | 000 | 549 53 | 236 73 |
| 002733 | 277 | 241 | 196 | 2 | 15 | 0 | 00 | 365 61 | 602 34 |

FLOW DISTRIBUTION FOR SECNO= 990 00 CWSEL= 564 41

| STA= | 237 | 242 | 250 | 253 | 265 | 273 | 278 | 400 | 405 | 488 | 580 | 588 | 602 |
|---|---|---|---|---|---|---|---|---|---|---|---|---|---|
| PER Q= | 1 | 1 0 | 6 | 3 4 | 2 9 | 2 1 | 75 9 | 1 6 | 10 0 | 2 4 | 0 | 0 | |
| AREA= | 8 6 | 29 2 | 14 3 | 74 3 | 57 5 | 38 6 | 1546 9 | 36 4 | 306 8 | 137 4 | 3 9 | 3 0 | |
| VEL= | 3 1 | 6 3 | 7 5 | 8 6 | 9 5 | 10 2 | 9 3 | 8 3 | 6 2 | 3 4 | 1 6 | 9 | |
| DEPTH= | 1 5 | 3 9 | 5 1 | 6 1 | 7 1 | 8 0 | 12 7 | 6 6 | 3 7 | 1 5 | 5 | 2 | |

*SECNO 1001 000

3301 HV CHANGED MORE THAN HVINS

3470 ENCROACHMENT STATIONS= 140 0 580 0 TYPE= 1 TARGET= 440 000

| | | | | | | | | | |
|---|---|---|---|---|---|---|---|---|---|
| 1001 000 | 13 81 | 565 51 | 562 34 | 00 | 566 21 | 70 | 55 | 05 | 556 00 |
| 19000 0 | 3850 5 | 11413 6 | 3736 0 | 578 2 | 1587 6 | 726 8 | 104 1 | 16 6 | 560 00 |
| 07 | 6 66 | 7 19 | 5 14 | 030 | 045 | 030 | 000 | 551 70 | 161 40 |
| 001603 | 138 | 287 | 298 | 2 | 14 | 0 | 00 | 410 64 | 572 04 |

FLOW DISTRIBUTION FOR SECNO= 1001 00 CWSEL= 565 51

| STA= | 161 | 167 | 179 | 211 | 250 | 267 | 390 | 524 | 537 | 567 | 572 |
|---|---|---|---|---|---|---|---|---|---|---|---|
| PER Q= | 0 | 6 | 4 1 | 9 3 | 6 3 | 60 1 | 17 3 | 9 | 1 5 | 1 | |
| AREA= | 4 3 | 30 2 | 144 6 | 254 3 | 144 8 | 1587 6 | 605 6 | 39 3 | 75 6 | 6 3 | |
| VEL= | 1 6 | 3 6 | 5 4 | 6 9 | 8 2 | 7 2 | 5 4 | 4 1 | 3 7 | 2 1 | |
| DEPTH= | 8 | 2 5 | 4 5 | 6 5 | 8 5 | 12 9 | 4 5 | 3 0 | 2 5 | 1 3 | |

*SECNO 1100 000

3301 HV CHANGED MORE THAN HVINS

| | | | | | | | | | |
|---|---|---|---|---|---|---|---|---|---|
| SECNO | DEPTH | CWSEL | CRIWS | WSELK | EG | HV | HL | OLOSS | L-BANK ELEV |
| Q | QLOB | QCH | QROB | ALOB | ACH | AROB | VOL | TWA | R-BANK ELEV |
| TIME | VLOB | VCH | VROB | XNL | XNCH | XNR | WTN | ELMIN | SSTA |
| SLOPE | XLOBL | XLCH | XLOBR | ITRIAL | IDC | ICONT | CORAR | TOPWID | ENDST |

3302 WARNING CONVEYANCE CHANGE OUTSIDE OF ACCEPTABLE RANGE, KRATIO = 52

3470 ENCROACHMENT STATIONS= 318 5 756 5 TYPE= 1 TARGET= 437 970

| | | | | | | | | | |
|---|---|---|---|---|---|---|---|---|---|
| 1100 000 | 13 45 | 565 65 | 565 44 | 00 | 567 58 | 1 93 | 1 00 | 37 | 562 46 |
| 19000 0 | 98 1 | 9464 3 | 9437 5 | 24 6 | 760 4 | 968 5 | 123 4 | 19 9 | 559 40 |
| 08 | 3 99 | 12 45 | 9 74 | 030 | 045 | 030 | 000 | 552 20 | 333 62 |
| 005993 | 433 | 335 | 372 | 3 | 10 | 0 | 00 | 361 35 | 694 98 |

FLOW DISTRIBUTION FOR SECNO= 1100 00 CWSEL= 565 65

| STA= | 334 | 341 | 358 | 362 | 363 | 427 | 554 | 676 | 695 |
|---|---|---|---|---|---|---|---|---|---|
| PER Q= | 0 | 2 | 2 | 1 | 49 8 | 36 9 | 12 5 | 3 | |
| AREA= | 1 7 | 13 6 | 7 1 | 2 2 | 760 4 | 629 5 | 323 3 | 15 7 | |
| VEL= | 1 4 | 3 3 | 5 6 | 5 0 | 12 4 | 11 1 | 7 3 | 3 4 | |
| DEPTH= | 2 | 8 | 1 8 | 2 6 | 11 9 | 5 0 | 2 7 | 8 | |

CCHV= 300 CEHV= 500

*SECNO 1150 000

3470 ENCROACHMENT STATIONS= 346 3 757 5 TYPE= 1 TARGET= 411 220

| | | | | | | | | | |
|---|---|---|---|---|---|---|---|---|---|
| 1150 000 | 14 75 | 566 93 | 566 37 | 00 | 568 90 | 1 97 | 1 30 | 02 | 561 80 |
| 19000 0 | 411 6 | 11647 5 | 6940 9 | 66 5 | 941 3 | 738 4 | 132 4 | 21 6 | 559 87 |
| 08 | 6 19 | 12 37 | 9 40 | 030 | 045 | 030 | 000 | 552 18 | 359 52 |
| 005597 | 179 | 223 | 228 | 3 | 8 | 0 | 00 | 335 43 | 694 95 |

FLOW DISTRIBUTION FOR SECNO= 1150 00 CWSEL= 566 93

| STA= | 360 | 370 | 383 | 398 | 402 | 407 | 408 | 489 | 521 | 628 | 693 | 695 |
|---|---|---|---|---|---|---|---|---|---|---|---|---|
| PER Q= | 0 | 1 | 6 | 3 | 9 | 2 | 61 3 | 12 3 | 20 4 | 3 8 | 0 | |
| AREA= | 3 2 | 7 3 | 22 8 | 7 7 | 21 0 | 4 6 | 941 3 | 192 1 | 420 2 | 125 3 | 9 | |
| VEL= | 1 7 | 2 6 | 4 8 | 6 7 | 8 5 | 10 3 | 12 4 | 12 2 | 9 2 | 5 7 | 2 1 | |
| DEPTH= | 3 | 6 | 1 5 | 2 5 | 3 7 | 5 0 | 11 6 | 6 0 | 3 9 | 1 9 | 5 | |

*SECNO 1175 000

3301 HV CHANGED MORE THAN HVINS

| | | | | | | | | | |
|---|---|---|---|---|---|---|---|---|---|
| SECNO | DEPTH | CWSEL | CRIWS | WSELK | EG | HV | HL | OLOSS | L-BANK ELEV |
| Q | QLOB | QCH | QROB | ALOB | ACH | AROB | VOL | TWA | R-BANK ELEV |
| TIME | VLOB | VCH | VROB | XNL | XNCH | XNR | WTN | ELMIN | SSTA |
| SLOPE | XLOBL | XLCH | XLOBR | ITRIAL | IDC | ICONT | CORAR | TOPWID | ENDST |

3302 WARNING CONVEYANCE CHANGE OUTSIDE OF ACCEPTABLE RANGE, KRATIO = 1 57

| | | | | | | | | | |
|---|---|---|---|---|---|---|---|---|---|
| 1175 000 | 15 36 | 568 61 | 564 47 | 00 | 569 60 | 99 | 41 | 30 | 561 10 |
| 19000 0 | 1183 9 | 15276 2 | 2540 0 | 196 6 | 1808 5 | 465 3 | 138 2 | 22 6 | 560 18 |
| 09 | 6 02 | 8 45 | 5 46 | 030 | 045 | 030 | 000 | 553 25 | 33 22 |
| 002262 | 96 | 115 | 140 | 3 | 14 | 0 | 00 | 368 81 | 402 02 |

FLOW DISTRIBUTION FOR SECNO= 1175 00 CWSEL= 568 61

| STA= | 33 | 63 | 85 | 96 | 240 | 254 | 283 | 310 | 333 | 365 | 400 | 402 |
|---|---|---|---|---|---|---|---|---|---|---|---|---|
| PER Q= | 7 | 2 7 | 2 9 | 80 4 | 3 9 | 3 9 | 2 5 | 1 4 | 1 2 | 6 | 0 | |
| AREA= | 39 6 | 87 4 | 69 7 | 1808 5 | 91 3 | 120 3 | 89 5 | 60 3 | 62 7 | 40 5 | 7 | |
| VEL= | 3 1 | 5 8 | 7 9 | 8 4 | 8 0 | 6 1 | 5 2 | 4 5 | 3 7 | 2 6 | 1 1 | |
| DEPTH= | 1 4 | 3 9 | 6 3 | 12 6 | 6 5 | 4 1 | 3 3 | 2 6 | 2 0 | 1 2 | 4 | |

*SECNO 1200 000

| | | | | | | | | | |
|---|---|---|---|---|---|---|---|---|---|
| 1200 000 | 10 87 | 568 47 | 566 72 | 00 | 569 91 | 1 44 | 08 | 23 | 562 50 |
| 19000 0 | 1192 4 | 15432 6 | 2375 0 | 225 8 | 1496 6 | 379 4 | 139 7 | 22 9 | 561 09 |
| 09 | 5 28 | 10 31 | 6 26 | 039 | 039 | 039 | 000 | 557 60 | 215 52 |
| 003791 | 30 | 30 | 20 | 2 | 14 | 0 | 00 | 366 57 | 582 09 |

FLOW DISTRIBUTION FOR SECNO= 1200 00 CWSEL= 568 47

| STA= | 216 | 231 | 264 | 296 | 310 | 472 | 482 | 498 | 525 | 547 | 582 |
|---|---|---|---|---|---|---|---|---|---|---|---|
| PER Q= | 0 | 6 | 2 8 | 2 8 | 81 2 | 3 3 | 3 6 | 3 3 | 1 7 | 6 | |
| AREA= | 3 6 | 42 7 | 103 8 | 75 7 | 1496 6 | 71 9 | 91 7 | 105 4 | 67 0 | 43 3 | |
| VEL= | 9 | 2 8 | 5 2 | 7 0 | 10 3 | 8 7 | 7 5 | 5 9 | 4 9 | 2 7 | |
| DEPTH= | 2 | 1 3 | 3 3 | 5 2 | 9 2 | 7 2 | 5 7 | 4 0 | 3 0 | 1 2 | |

*SECNO 1225 000

3301 HV CHANGED MORE THAN HVINS

7185 MINIMUM SPECIFIC ENERGY
3720 CRITICAL DEPTH ASSUMED

| | | | | | | | | | |
|---|---|---|---|---|---|---|---|---|---|
| 1225 000 | 6 56 | 568 60 | 568 60 | 00 | 570 84 | 2 24 | 01 | 40 | 563 32 |
| 18740 0 | 1921 8 | 13127 4 | 3690 8 | 225 9 | 1010 6 | 380 7 | 139 9 | 22 9 | 563 20 |
| 09 | 8 51 | 12 99 | 9 70 | 018 | 018 | 018 | 000 | 562 04 | 213 76 |
| 002168 | 5 | 5 | 5 | 0 | 14 | 0 | 00 | 369 90 | 583 65 |

| | | | | | | | | | |
|---|---|---|---|---|---|---|---|---|---|
| SECNO | DEPTH | CWSEL | CRIWS | WSELK | EG | HV | HL | OLOSS | L-BANK ELEV |
| Q | QLOB | QCH | QROB | ALOB | ACH | AROB | VOL | TWA | R-BANK ELEV |
| TIME | VLOB | VCH | VROB | XNL | XNCH | XNR | WTN | ELMIN | SSTA |
| SLOPE | XLOBL | XLCH | XLOBR | ITRIAL | IDC | ICONT | CORAR | TOPWID | ENDST |

FLOW DISTRIBUTION FOR SECNO= 1225 00 CWSEL= 568 60

| STA= | 214 | 288 | 303 | 309 | 471 | 486 | 498 | 511 | 526 | 546 | 584 |
|---|---|---|---|---|---|---|---|---|---|---|---|
| PER Q= | 4 7 | 3 6 | 1 9 | 70 0 | 4 9 | 3 6 | 3 3 | 3 0 | 3 1 | 1 8 | |
| AREA= | 129 3 | 65 1 | 31 4 | 1010 6 | 78 4 | 59 6 | 59 9 | 57 8 | 66 9 | 58 0 | |
| VEL= | 6 8 | 10 4 | 11 5 | 13 0 | 11 6 | 11 3 | 10 4 | 9 7 | 8 6 | 5 8 | |
| DEPTH= | 1 7 | 4 5 | 5 2 | 6 2 | 5 3 | 5 1 | 4 5 | 4 0 | 3 4 | 1 5 | |

*SECNO 1250 000

3301 HV CHANGED MORE THAN HVINS

3302 WARNING CONVEYANCE CHANGE OUTSIDE OF ACCEPTABLE RANGE, KRATIO = 1 40

| | | | | | | | | | |
|---|---|---|---|---|---|---|---|---|---|
| 1250 000 | 7 67 | 569 74 | 568 65 | 00 | 571 13 | 1 39 | 03 | 26 | 563 21 |
| 18740 0 | 2515 0 | 12359 8 | 3865 2 | 369 5 | 1194 9 | 497 2 | 140 8 | 23 1 | 563 35 |
| 09 | 6 81 | 10 34 | 7 77 | 018 | 018 | 018 | 000 | 562 07 | 172 97 |
| 001100 | 20 | 20 | 19 | 13 | 5 | 0 | 00 | 415 22 | 588 19 |

FLOW DISTRIBUTION FOR SECNO= 1250 00 CWSEL= 569 74

| STA= | 173 | 264 | 284 | 304 | 305 | 468 | 480 | 493 | 524 | 550 | 588 |
|---|---|---|---|---|---|---|---|---|---|---|---|
| PER Q= | 4 0 | 3 6 | 5 5 | 4 | 66 0 | 3 7 | 3 8 | 7 3 | 3 8 | 1 9 | |
| AREA= | 154 6 | 90 6 | 116 8 | 7 5 | 1194 9 | 75 4 | 79 4 | 163 5 | 103 8 | 75 0 | |
| VEL= | 4 8 | 7 4 | 8 8 | 9 5 | 10 3 | 9 3 | 9 1 | 8 3 | 6 9 | 4 8 | |
| DEPTH= | 1 7 | 4 5 | 5 8 | 6 5 | 7 3 | 6 3 | 6 0 | 5 3 | 4 0 | 1 9 | |

*SECNO 1300 000

3265 DIVIDED FLOW

3302 WARNING CONVEYANCE CHANGE OUTSIDE OF ACCEPTABLE RANGE, KRATIO = 66

| | | | | | | | | | |
|---|---|---|---|---|---|---|---|---|---|
| 1300 000 | 10 64 | 570 32 | 568 16 | 00 | 571 27 | 94 | 01 | 13 | 563 61 |
| 19000 0 | 2865 4 | 12068 7 | 4065 9 | 442 3 | 1472 1 | 546 9 | 141 1 | 23 1 | 563 30 |
| 09 | 6 48 | 8 20 | 7 43 | 030 | 040 | 030 | 000 | 559 68 | 125 23 |
| 002597 | 6 | 5 | 6 | 3 | 8 | 0 | 00 | 428 58 | 560 19 |

| | | | | | | | | | |
|---|---|---|---|---|---|---|---|---|---|
| SECNO | DEPTH | CWSEL | CRIWS | WSELK | EG | HV | HL | OLOSS | L-BANK ELEV |
| Q | QLOB | QCH | QROB | ALOB | ACH | AROB | VOL | TWA | R-BANK ELEV |
| TIME | VLOB | VCH | VROB | XNL | XNCH | XNR | WTN | ELMIN | SSTA |
| SLOPE | XLOBL | XLCH | XLOBR | ITRIAL | IDC | ICONT | CORAR | TOPWID | ENDST |

FLOW DISTRIBUTION FOR SECNO= 1300 00 CWSEL= 570 32

| STA= | 125 | 231 | 252 | 271 | 274 | 437 | 449 | 459 | 476 | 491 | 515 | 555 | 560 |
|---|---|---|---|---|---|---|---|---|---|---|---|---|---|
| PER Q= | 5 5 | 3 5 | 5 1 | 1 0 | 63 5 | 3 7 | 3 0 | 4 1 | 3 4 | 4 1 | 3 1 | 0 | |
| AREA= | 210 5 | 94 4 | 115 8 | 21 6 | 1472 1 | 77 6 | 66 1 | 95 4 | 82 2 | 111 3 | 112 2 | 2 2 | |
| VEL= | 5 0 | 7 0 | 8 3 | 8 9 | 8 2 | 8 9 | 8 7 | 8 2 | 7 8 | 7 1 | 5 3 | 1 4 | |
| DEPTH= | 2 0 | 4 7 | 6 0 | 6 7 | 9 0 | 6 7 | 6 4 | 5 8 | 5 4 | 4 7 | 2 8 | 4 | |

*SECNO 1350 000

3265 DIVIDED FLOW

3301 HV CHANGED MORE THAN HVINS

7185 MINIMUM SPECIFIC ENERGY
3720 CRITICAL DEPTH ASSUMED

| | | | | | | | | | |
|---|---|---|---|---|---|---|---|---|---|
| 1350 000 | 11 27 | 570 95 | 570 95 | 00 | 573 00 | 2 06 | 42 | 56 | 565 98 |
| 19000 0 | 3086 9 | 11687 9 | 4225 1 | 442 4 | 935 2 | 374 0 | 146 4 | 24 3 | 564 12 |
| 09 | 6 98 | 12 50 | 11 30 | 030 | 040 | 030 | 000 | 559 68 | 131 64 |
| 006118 | 122 | 111 | 99 | 0 | 8 | 0 | 00 | 464 10 | 604 72 |

FLOW DISTRIBUTION FOR SECNO= 1350 00 CWSEL= 570 95

| STA= | 132 | 329 | 380 | 408 | 420 | 524 | 543 | 552 | 567 | 588 | 605 |
|---|---|---|---|---|---|---|---|---|---|---|---|
| PER Q= | 4 1 | 4 7 | 4 5 | 2 9 | 61 5 | 8 1 | 3 2 | 4 4 | 5 0 | 1 5 | |
| AREA= | 167 0 | 125 0 | 97 6 | 52 7 | 935 2 | 116 7 | 51 1 | 74 1 | 93 1 | 39 1 | |
| VEL= | 4 7 | 7 1 | 8 8 | 10 6 | 12 5 | 13 1 | 11 9 | 11 3 | 10 2 | 7 4 | |
| DEPTH= | 8 | 2 5 | 3 4 | 4 5 | 9 0 | 6 3 | 5 4 | 5 0 | 4 3 | 2 4 | |

CCHV= 100 CEHV= 300
*SECNO 1400 000

3265 DIVIDED FLOW

7185 MINIMUM SPECIFIC ENERGY
3720 CRITICAL DEPTH ASSUMED

| | | | | | | | | | |
|---|---|---|---|---|---|---|---|---|---|
| 1400 000 | 13 35 | 572 75 | 572 75 | 00 | 575 03 | 2 28 | 92 | 07 | 568 00 |
| 19000 0 | 6355 3 | 9933 4 | 2711 2 | 706 1 | 707 5 | 251 7 | 152 0 | 25 5 | 565 84 |
| 09 | 9 00 | 14 04 | 10 77 | 030 | 040 | 030 | 000 | 559 40 | 73 27 |
| 006410 | 99 | 149 | 203 | 0 | 11 | 0 | 00 | 367 70 | 441 46 |

| | | | | | | | | | |
|---|---|---|---|---|---|---|---|---|---|
| SECNO | DEPTH | CWSEL | CRIWS | WSELK | EG | HV | HL | OLOSS | L-BANK ELEV |
| Q | QLOB | QCH | QROB | ALOB | ACH | AROB | VOL | TWA | R-BANK ELEV |
| TIME | VLOB | VCH | VROB | XNL | XNCH | XNR | WTN | ELMIN | SSTA |
| SLOPE | XLOBL | XLCH | XLOBR | ITRIAL | IDC | ICONT | CORAR | TOPWID | ENDST |

FLOW DISTRIBUTION FOR SECNO= 1400 00 CWSEL= 572 75

| STA= | 73 | 149 | 181 | 203 | 234 | 259 | 288 | 308 | 314 | 380 | 392 | 411 | 431 |
|---|---|---|---|---|---|---|---|---|---|---|---|---|---|
| PER Q= | 3 0 | 3 3 | 3 3 | 6 0 | 5 3 | 6 3 | 4 5 | 1 7 | 52 3 | 4 4 | 5 7 | 3 6 | |
| AREA= | 101 8 | 82 9 | 73 2 | 117 6 | 98 9 | 120 1 | 82 7 | 29 0 | 707 5 | 67 8 | 94 7 | 71 5 | |
| VEL= | 5 7 | 7 6 | 8 7 | 9 6 | 10 1 | 10 0 | 10 4 | 10 9 | 14 0 | 12 4 | 11 5 | 9 5 | |
| DEPTH= | 1 3 | 2 6 | 3 2 | 3 8 | 4 1 | 4 0 | 4 2 | 4 6 | 10 8 | 5 6 | 4 9 | 3 7 | |

| STA= | 431 | 441 |
|---|---|---|
| PER Q= | 6 | |
| AREA= | 17 6 | |
| VEL= | 6 3 | |
| DEPTH= | 1 7 | |

*SECNO 1500 000

3301 HV CHANGED MORE THAN HVINS

7185 MINIMUM SPECIFIC ENERGY
3720 CRITICAL DEPTH ASSUMED

| | | | | | | | | | |
|---|---|---|---|---|---|---|---|---|---|
| 1500 000 | 14 11 | 573 77 | 573 77 | 00 | 577 35 | 3 58 | 1 75 | 39 | 570 20 |
| 19000 0 | 55 4 | 14562 6 | 4382 0 | 9 6 | 904 6 | 371 4 | 160 5 | 27 1 | 566 04 |
| 10 | 5 75 | 16 10 | 11 80 | 030 | 040 | 030 | 000 | 559 66 | 23 92 |
| 007562 | 255 | 263 | 214 | 0 | 8 | 0 | 00 | 178 95 | 202 87 |

FLOW DISTRIBUTION FOR SECNO= 1500 00 CWSEL= 573 77

| STA= | 24 | 29 | 107 | 121 | 141 | 169 | 200 | 203 |
|---|---|---|---|---|---|---|---|---|
| PER Q= | 3 | 76 6 | 8 8 | 7 2 | 3 6 | 3 5 | 0 | |
| AREA= | 9 6 | 904 6 | 103 7 | 105 3 | 78 6 | 81 6 | 2 3 | |
| VEL= | 5 8 | 16 1 | 16 1 | 12 9 | 8 7 | 8 2 | 3 6 | |
| DEPTH= | 1 8 | 11 7 | 7 2 | 5 2 | 2 8 | 2 6 | 9 | |

*SECNO 1600 000
7185 MINIMUM SPECIFIC ENERGY
3720 CRITICAL DEPTH ASSUMED

| | | | | | | | | | |
|---|---|---|---|---|---|---|---|---|---|
| 1600 000 | 14 23 | 578 29 | 578 29 | 00 | 582 36 | 4 08 | 1 27 | 15 | 574 40 |
| 19000 0 | 139 9 | 12203 9 | 6656 2 | 17 6 | 735 8 | 426 7 | 165 0 | 27 7 | 570 40 |
| 10 | 7 94 | 16 59 | 15 60 | 030 | 040 | 030 | 000 | 564 06 | 23 71 |
| 008596 | 143 | 151 | 176 | 0 | 5 | 0 | 00 | 146 05 | 169 75 |

| | | | | | | | | | |
|---|---|---|---|---|---|---|---|---|---|
| SECNO | DEPTH | CWSEL | CRIWS | WSELK | EG | HV | HL | OLOSS | L-BANK ELEV |
| Q | QLOB | QCH | QROB | ALOB | ACH | AROB | VOL | TWA | R-BANK ELEV |
| TIME | VLOB | VCH | VROB | XNL | XNCH | XNR | WTN | ELMIN | SSTA |
| SLOPE | XLOBL | XLCH | XLOBR | ITRIAL | IDC | ICONT | CORAR | TOPWID | ENDST |

FLOW DISTRIBUTION FOR SECNO= 1600 00 CWSEL= 578 29

| STA= | 24 | 32 | 99 | 108 | 121 | 131 | 142 | 148 | 154 | 169 |
|---|---|---|---|---|---|---|---|---|---|---|
| PER Q= | 7 | 64 2 | 4 5 | 6 0 | 5 9 | 7 5 | 3 7 | 3 9 | 3 5 | |
| AREA= | 17 6 | 735 8 | 55 4 | 76 6 | 68 1 | 82 2 | 40 4 | 45 2 | 58 6 | |
| VEL= | 7 9 | 16 6 | 15 5 | 14 9 | 16 5 | 17 2 | 17 2 | 16 5 | 11 4 | |
| DEPTH= | 2 1 | 11 0 | 6 5 | 5 9 | 6 8 | 7 3 | 7 2 | 6 8 | 3 8 | |

*SECNO 1700 000

3301 HV CHANGED MORE THAN HVINS

3302 WARNING CONVEYANCE CHANGE OUTSIDE OF ACCEPTABLE RANGE, KRATIO = 2 12

| | | | | | | | | | |
|---|---|---|---|---|---|---|---|---|---|
| 1700 000 | 17 41 | 581 80 | 577 13 | 00 | 583 22 | 1 42 | 59 | 27 | 575 09 |
| 19000 0 | 140 4 | 11450 5 | 7409 0 | 29 0 | 1212 7 | 755 8 | 171 1 | 28 3 | 570 00 |
| 11 | 4 84 | 9 44 | 9 80 | 030 | 040 | 030 | 000 | 564 39 | 10 55 |
| 001918 | 173 | 177 | 153 | 3 | 15 | 0 | 00 | 173 97 | 184 52 |

FLOW DISTRIBUTION FOR SECNO= 1700 00 CWSEL= 581 80

| STA= | 11 | 19 | 102 | 110 | 125 | 140 | 152 | 159 | 166 | 177 | 185 |
|---|---|---|---|---|---|---|---|---|---|---|---|
| PER Q= | 7 | 60 3 | 5 7 | 8 5 | 8 0 | 6 2 | 3 4 | 3 3 | 3 3 | 4 | |
| AREA= | 29 0 | 1212 7 | 98 9 | 154 1 | 151 3 | 118 8 | 66 1 | 67 0 | 78 6 | 21 0 | |
| VEL= | 4 8 | 9 4 | 11 0 | 10 5 | 10 1 | 9 9 | 9 9 | 9 4 | 8 1 | 3 7 | |
| DEPTH= | 3 5 | 14 6 | 11 5 | 10 7 | 10 0 | 9 8 | 9 7 | 9 0 | 7 5 | 2 7 | |

*SECNO 1800 000

3302 WARNING CONVEYANCE CHANGE OUTSIDE OF ACCEPTABLE RANGE, KRATIO = 68

| | | | | | | | | | |
|---|---|---|---|---|---|---|---|---|---|
| 1800 000 | 13 78 | 582 36 | 579 26 | 00 | 584 11 | 1 74 | 79 | 10 | 578 02 |
| 19000 0 | 72 1 | 16546 8 | 2381 1 | 27 9 | 1561 1 | 221 6 | 183 8 | 29 5 | 574 14 |
| 11 | 2 59 | 10 60 | 10 75 | 060 | 045 | 030 | 000 | 568 58 | 59 94 |
| 004165 | 447 | 313 | 217 | 2 | 14 | 0 | 00 | 193 50 | 253 43 |

FLOW DISTRIBUTION FOR SECNO= 1800 00 CWSEL= 582 36

| | | | | | | | | | |
|---|---|---|---|---|---|---|---|---|---|
| SECNO | DEPTH | CWSEL | CRIWS | WSELK | EG | HV | HL | OLOSS | L-BANK ELEV |
| Q | QLOB | QCH | QROB | ALOB | ACH | AROB | VOL | TWA | R-BANK ELEV |
| TIME | VLOB | VCH | VROB | XNL | XNCH | XNR | WTN | ELMIN | SSTA |
| SLOPE | XLOBL | XLCH | XLOBR | ITRIAL | IDC | ICONT | CORAR | TOPWID | ENDST |

| STA= | 60 | 73 | 212 | 213 | 215 | 220 | 233 | 242 | 246 | 249 | 253 |
|---|---|---|---|---|---|---|---|---|---|---|---|
| PER Q= | 4 | 87 1 | 5 | 1 3 | 2 2 | 5 8 | 2 1 | 3 | 2 | 1 | |
| AREA= | 27 9 | 1561 1 | 8 3 | 19 4 | 33 2 | 94 4 | 45 8 | 8 8 | 7 7 | 4 1 | |
| VEL= | 2 6 | 10 6 | 12 5 | 12 7 | 12 4 | 11 7 | 8 9 | 6 0 | 5 2 | 3 0 | |
| DEPTH= | 2 2 | 11 2 | 8 1 | 7 9 | 7 7 | 7 0 | 4 9 | 2 7 | 2 1 | 1 0 | |

*SECNO 1900 000

3301 HV CHANGED MORE THAN HVINS

| | | | | | | | | | |
|---|---|---|---|---|---|---|---|---|---|
| 1900 000 | 12 43 | 583 25 | 581 35 | 00 | 585 50 | 2 24 | 1 24 | 15 | 578 58 |
| 19000 0 | 252 3 | 18677 1 | 70 6 | 57 9 | 1542 3 | 11 3 | 193 1 | 30 5 | 579 93 |
| 12 | 74 36 | 12 11 | 6 26 | 060 | 045 | 030 | 000 | 570 82 | 84 79 |
| 006842 | 214 | 236 | 245 | 2 | 15 | 0 | 00 | 192 62 | 277 41 |

FLOW DISTRIBUTION FOR SECNO= 1900 00 CWSEL= 583 25

| STA= | 85 | 91 | 93 | 101 | 107 | 271 | 273 | 277 |
|---|---|---|---|---|---|---|---|---|
| PER Q= | 0 | 1 | 4 | 8 | 98 3 | 2 | 2 | |
| AREA= | 4 2 | 4 0 | 20 8 | 28 8 | 1542 3 | 4 6 | 6 6 | |
| VEL= | 1 6 | 2 8 | 3 9 | 5 3 | 12 1 | 8 5 | 4 7 | |
| DEPTH= | 7 | 1 6 | 2 7 | 4 2 | 9 4 | 3 1 | 1 4 | |

*SECNO 2000 000

3301 HV CHANGED MORE THAN HVINS

7185 MINIMUM SPECIFIC ENERGY
3720 CRITICAL DEPTH ASSUMED

| | | | | | | | | | |
|---|---|---|---|---|---|---|---|---|---|
| 2000 000 | 13 72 | 585 32 | 585 32 | 00 | 589 86 | 4 54 | 2 25 | 69 | 582 61 |
| 19000 0 | 52 8 | 18475 6 | 471 6 | 13 4 | 1073 1 | 37 7 | 200 7 | 31 4 | 580 10 |
| 12 | 3 93 | 17 22 | 12 53 | 060 | 045 | 030 | 000 | 571 60 | 49 67 |
| 013051 | 196 | 244 | 259 | 0 | 8 | 0 | 00 | 129 11 | 178 78 |

FLOW DISTRIBUTION FOR SECNO= 2000 00 CWSEL= 585 32

| STA= | 50 | 56 | 59 | 166 | 168 | 176 | 179 |
|---|---|---|---|---|---|---|---|
| PER Q= | 1 | 2 | 97 2 | 7 | 1 7 | 1 | |
| AREA= | 6 7 | 6 8 | 1073 1 | 8 7 | 26 2 | 2 8 | |
| VEL= | 2 8 | 5 0 | 17 2 | 16 0 | 12 2 | 4 9 | |
| DEPTH= | 1 1 | 2 4 | 10 0 | 5 0 | 3 3 | 1 0 | |

| | | | | | | | | | |
|---|---|---|---|---|---|---|---|---|---|
| SECNO | DEPTH | CWSEL | CRIWS | WSELK | EG | HV | HL | OLOSS | L-BANK ELEV |
| Q | QLOB | QCH | QROB | ALOB | ACH | AROB | VOL | TWA | R-BANK ELEV |
| TIME | VLOB | VCH | VROB | XNL | XNCH | XNR | WTN | ELMIN | SSTA |
| SLOPE | XLOBL | XLCH | XLOBR | ITRIAL | IDC | ICONT | CORAR | TOPWID | ENDST |

*SECNO 2100 000
7185 MINIMUM SPECIFIC ENERGY
3720 CRITICAL DEPTH ASSUMED

| | | | | | | | | | |
|---|---|---|---|---|---|---|---|---|---|
| 2100 000 | 14 37 | 588 76 | 588 76 | 00 | 593 33 | 4 56 | 2 62 | 01 | 585 86 |
| 19000 0 | 204 7 | 18600 2 | 195 2 | 44 4 | 1074 9 | 25 1 | 206 0 | 32 0 | 583 70 |
| 13 | 4 61 | 17 30 | 7 78 | 060 | 045 | 040 | 000 | 574 39 | 46 93 |
| 012669 | 193 | 204 | 211 | 0 | 8 | 0 | 00 | 137 41 | 184 34 |

FLOW DISTRIBUTION FOR SECNO= 2100 00 CWSEL= 588 76

| STA= | 47 | 54 | 64 | 68 | 69 | 173 | 174 | 182 | 184 |
|---|---|---|---|---|---|---|---|---|---|
| PER Q= | 1 | 6 | 2 | 1 | 97 9 | 2 | 8 | 0 | |
| AREA= | 8 5 | 23 4 | 9 3 | 3 1 | 1074 9 | 3 1 | 21 0 | 1 0 | |
| VEL= | 3 0 | 5 0 | 5 1 | 5 2 | 17 3 | 11 4 | 7 5 | 2 0 | |
| DEPTH= | 1 2 | 2 4 | 2 5 | 2 7 | 10 3 | 4 9 | 2 7 | 3 | |

1490 NH CARD USED
*SECNO 2200 000
7185 MINIMUM SPECIFIC ENERGY
3720 CRITICAL DEPTH ASSUMED

| | | | | | | | | | |
|---|---|---|---|---|---|---|---|---|---|
| 2200 000 | 16 32 | 594 02 | 594 02 | 00 | 598 79 | 4 77 | 2 91 | 06 | 589 80 |
| 19000 0 | 428 7 | 18453 3 | 118 0 | 49 5 | 1040 3 | 19 4 | 212 3 | 32 8 | 589 80 |
| 13 | 8 66 | 17 74 | 6 07 | 030 | 045 | 045 | 000 | 577 70 | 34 93 |
| 011183 | 245 | 245 | 261 | 0 | 8 | 0 | 00 | 120 67 | 155 60 |

FLOW DISTRIBUTION FOR SECNO= 2200 00 CWSEL= 594 02

| STA= | 35 | 59 | 146 | 156 |
|---|---|---|---|---|
| PER Q= | 2 3 | 97 1 | 6 | |
| AREA= | 49 5 | 1040 3 | 19 4 | |
| VEL= | 8 7 | 17 7 | 6 1 | |
| DEPTH= | 2 0 | 12 1 | 2 0 | |

1490 NH CARD USED
*SECNO 2300 000
7185 MINIMUM SPECIFIC ENERGY
3720 CRITICAL DEPTH ASSUMED

| | | | | | | | | | |
|---|---|---|---|---|---|---|---|---|---|
| 2300 000 | 16 08 | 599 29 | 599 29 | 00 | 603 77 | 4 48 | 2 16 | 03 | 589 90 |
| 19000 0 | 1537 9 | 16323 1 | 1139 0 | 135 4 | 917 5 | 113 8 | 217 9 | 33 4 | 589 93 |
| 13 | 11 36 | 17 79 | 10 01 | 033 | 045 | 045 | 000 | 583 21 | 16 58 |
| 009166 | 219 | 215 | 164 | 0 | 6 | 0 | 00 | 122 27 | 138 85 |

| | | | | | | | | | |
|---|---|---|---|---|---|---|---|---|---|
| SECNO | DEPTH | CWSEL | CRIWS | WSELK | EG | HV | HL | OLOSS | L-BANK ELEV |
| Q | QLOB | QCH | QROB | ALOB | ACH | AROB | VOL | TWA | R-BANK ELEV |
| TIME | VLOB | VCH | VROB | XNL | XNCH | XNR | WTN | ELMIN | SSTA |
| SLOPE | XLOBL | XLCH | XLOBR | ITRIAL | IDC | ICONT | CORAR | TOPWID | ENDST |

FLOW DISTRIBUTION FOR SECNO= 2300 00 CWSEL= 599 29

| STA= | 17 | 33 | 49 | 115 | 130 | 139 |
|---|---|---|---|---|---|---|
| PER Q= | 3 8 | 4 3 | 85 9 | 5 6 | 4 | |
| AREA= | 48 7 | 86 7 | 917 5 | 98 1 | 15 7 | |
| VEL= | 14 9 | 9 4 | 17 8 | 10 9 | 4 4 | |
| DEPTH= | 3 0 | 5 4 | 13 8 | 6 6 | 1 8 | |

1490 NH CARD USED
*SECNO 2400 000

3301 HV CHANGED MORE THAN HVINS

7185 MINIMUM SPECIFIC ENERGY
3720 CRITICAL DEPTH ASSUMED

| | | | | | | | | | |
|---|---|---|---|---|---|---|---|---|---|
| 2400 000 | 19 35 | 604 10 | 604 10 | 00 | 606 74 | 2 63 | 2 01 | 18 | 594 20 |
| 19000 0 | 5583 1 | 11934 1 | 1482 8 | 548 1 | 820 1 | 166 7 | 226 7 | 34 6 | 595 90 |
| 14 | 10 19 | 14 55 | 8 89 | 035 | 045 | 024 | 000 | 584 75 | 61 67 |
| 005763 | 393 | 266 | 131 | 0 | 14 | 0 | 00 | 290 86 | 352 53 |

FLOW DISTRIBUTION FOR SECNO= 2400 00 CWSEL= 604 10

| STA= | 62 | 119 | 143 | 158 | 188 | 191 | 244 | 268 | 353 |
|---|---|---|---|---|---|---|---|---|---|
| PER Q= | 5 7 | 5 3 | 3 6 | 13 3 | 1 5 | 62 8 | 5 5 | 2 3 | |
| AREA= | 117 5 | 79 6 | 76 4 | 246 8 | 27 8 | 820 1 | 97 0 | 69 7 | |
| VEL= | 9 2 | 12 7 | 9 0 | 10 2 | 10 1 | 14 6 | 10 7 | 6 3 | |
| DEPTH= | 2 0 | 3 4 | 5 1 | 8 3 | 9 1 | 15 4 | 4 0 | 8 | |

1490 NH CARD USED
*SECNO 2500 000

3301 HV CHANGED MORE THAN HVINS

3302 WARNING CONVEYANCE CHANGE OUTSIDE OF ACCEPTABLE RANGE, KRATIO = 1 65

| | | | | | | | | | |
|---|---|---|---|---|---|---|---|---|---|
| 2500 000 | 21 11 | 606 03 | 601 22 | 00 | 607 35 | 1 32 | 48 | 13 | 594 80 |
| 19000 0 | 3844 1 | 13835 2 | 1320 7 | 475 3 | 1405 3 | 328 4 | 232 9 | 35 6 | 595 74 |
| 14 | 8 09 | 9 84 | 4 02 | 030 | 045 | 036 | 000 | 584 92 | 57 94 |
| 002129 | 142 | 150 | 126 | 3 | 14 | 0 | 00 | 304 96 | 362 90 |

| | | | | | | | | | |
|---|---|---|---|---|---|---|---|---|---|
| SECNO | DEPTH | CWSEL | CRIWS | WSELK | EG | HV | HL | OLOSS | L-BANK ELEV |
| Q | QLOB | QCH | QROB | ALOB | ACH | AROB | VOL | TWA | R-BANK ELEV |
| TIME | VLOB | VCH | VROB | XNL | XNCH | XNR | WTN | ELMIN | SSTA |
| SLOPE | XLOBL | XLCH | XLOBR | ITRIAL | IDC | ICONT | CORAR | TOPWID | ENDST |

FLOW DISTRIBUTION FOR SECNO= 2500 00 CWSEL= 606 03

| STA= | 58 | 77 | 90 | 102 | 118 | 127 | 134 | 136 | 218 | 237 | 346 | 363 |
|---|---|---|---|---|---|---|---|---|---|---|---|---|
| PER Q= | 3 2 | 3 6 | 3 3 | 3 4 | 3 0 | 3 1 | 7 | 72 8 | 3 0 | 3 4 | 5 | |
| AREA= | 72 5 | 68 4 | 60 8 | 90 7 | 83 6 | 81 4 | 17 8 | 1405 3 | 115 3 | 190 5 | 22 6 | |
| VEL= | 8 5 | 9 9 | 10 2 | 7 1 | 6 9 | 7 3 | 7 1 | 9 8 | 5 0 | 3 4 | 4 3 | |
| DEPTH= | 3 9 | 5 0 | 5 2 | 5 7 | 9 8 | 10 4 | 10 9 | 17 1 | 6 0 | 1 8 | 1 3 | |

1490 NH CARD USED
*SECNO 2600 000

| | | | | | | | | | |
|---|---|---|---|---|---|---|---|---|---|
| 2600 000 | 20 95 | 606 32 | 601 79 | 00 | 607 65 | 1 34 | 30 | 01 | 596 21 |
| 19000 0 | 8051 2 | 10154 0 | 794 8 | 755 0 | 1219 7 | 183 1 | 241 1 | 36 6 | 595 90 |
| 15 | 10 66 | 8 33 | 4 34 | 022 | 045 | 030 | 000 | 585 37 | 29 05 |
| 001576 | 163 | 163 | 159 | 2 | 13 | 0 | 00 | 240 95 | 270 00 |

FLOW DISTRIBUTION FOR SECNO= 2600 00 CWSEL= 606 32

| STA= | 29 | 58 | 70 | 100 | 106 | 115 | 126 | 132 | 204 | 241 | 270 |
|---|---|---|---|---|---|---|---|---|---|---|---|
| PER Q= | 5 7 | 4 7 | 16 9 | 3 8 | 6 0 | 3 9 | 1 5 | 53 4 | 3 1 | 1 1 | |
| AREA= | 128 1 | 82 9 | 260 3 | 54 5 | 87 6 | 89 1 | 52 4 | 1219 7 | 134 1 | 49 1 | |
| VEL= | 8 4 | 10 7 | 12 3 | 13 1 | 13 0 | 8 2 | 5 5 | 8 3 | 4 4 | 4 1 | |
| DEPTH= | 4 4 | 7 0 | 8 6 | 9 4 | 9 2 | 8 5 | 9 1 | 16 9 | 3 6 | 1 7 | |

1490 NH CARD USED
*SECNO 2700 000

3265 DIVIDED FLOW

| | | | | | | | | | |
|---|---|---|---|---|---|---|---|---|---|
| 2700 000 | 21 07 | 606 47 | 601 75 | 00 | 607 91 | 1 44 | 23 | 03 | 596 57 |
| 19000 0 | 6010 2 | 11305 0 | 1684 9 | 604 6 | 1184 8 | 185 7 | 247 2 | 37 2 | 592 60 |
| 15 | 9 94 | 9 54 | 9 07 | 025 | 045 | 020 | 000 | 585 40 | 36 23 |
| 001929 | 133 | 128 | 128 | 2 | 14 | 0 | 00 | 186 70 | 305 00 |

FLOW DISTRIBUTION FOR SECNO= 2700 00 CWSEL= 606 47

| STA= | 36 | 54 | 160 | 168 | 182 | 189 | 256 | 261 | 284 | 305 |
|---|---|---|---|---|---|---|---|---|---|---|
| PER Q= | 5 7 | 13 6 | 6 4 | 4 2 | 1 8 | 59 5 | 4 6 | 3 3 | 1 0 | |
| AREA= | 99 7 | 241 1 | 78 1 | 127 3 | 58 4 | 1184 8 | 60 7 | 84 9 | 40 1 | |
| VEL= | 10 9 | 10 7 | 15 5 | 6 2 | 5 8 | 9 5 | 14 2 | 7 4 | 4 8 | |
| DEPTH= | 5 8 | 2 3 | 10 4 | 9 0 | 8 5 | 17 7 | 11 9 | 3 7 | 1 9 | |

| | | | | | | | | | |
|---|---|---|---|---|---|---|---|---|---|
| SECNO | DEPTH | CWSEL | CRIWS | WSELK | EG | HV | HL | OLOSS | L-BANK ELEV |
| Q | QLOB | QCH | QROB | ALOB | ACH | AROB | VOL | TWA | R-BANK ELEV |
| TIME | VLOB | VCH | VROB | XNL | XNCH | XNR | WTN | ELMIN | SSTA |
| SLOPE | XLOBL | XLCH | XLOBR | ITRIAL | IDC | ICONT | CORAR | TOPWID | ENDST |

1490 NH CARD USED
*SECNO 2800 000

3265 DIVIDED FLOW

3301 HV CHANGED MORE THAN HVINS

3302 WARNING CONVEYANCE CHANGE OUTSIDE OF ACCEPTABLE RANGE, KRATIO = 1 85

| | | | | | | | | | |
|---|---|---|---|---|---|---|---|---|---|
| 2800 000 | 22 52 | 607 47 | 601 07 | 00 | 608 13 | 67 | 14 | 08 | 598 68 |
| 19000 0 | 10976 2 | 5609 0 | 2414 8 | 1456 5 | 1122 1 | 520 2 | 256 2 | 38 1 | 595 43 |
| 16 | 7 54 | 5 00 | 4 64 | 020 | 045 | 021 | 000 | 584 95 | 20 83 |
| 000564 | 105 | 187 | 190 | 2 | 17 | 0 | 00 | 330 78 | 409 60 |

FLOW DISTRIBUTION FOR SECNO= 2800 00 CWSEL= 607 47

| STA= | 21 | 55 | 142 | 155 | 174 | 198 | 208 | 221 | 224 | 287 | 311 | 347 | 384 |
|---|---|---|---|---|---|---|---|---|---|---|---|---|---|
| PER Q= | 9 2 | 10 9 | 5 7 | 9 1 | 11 7 | 5 1 | 5 6 | 6 | 29 5 | 3 3 | 5 4 | 3 6 | |
| AREA= | 290 7 | 302 1 | 128 4 | 204 4 | 259 1 | 109 5 | 127 0 | 35 4 | 1122 1 | 151 3 | 180 0 | 142 3 | |
| VEL= | 6 0 | 6 8 | 8 4 | 8 4 | 8 6 | 8 8 | 8 3 | 3 4 | 5 0 | 4 1 | 5 7 | 4 8 | |
| DEPTH= | 8 5 | 3 5 | 10 4 | 10 4 | 10 7 | 11 1 | 10 4 | 9 1 | 17 9 | 6 5 | 4 9 | 3 8 | |

| STA= | 384 | 410 |
|---|---|---|
| PER Q= | 5 | |
| AREA= | 46 6 | |
| VEL= | 1 9 | |
| DEPTH= | 1 9 | |

1490 NH CARD USED
*SECNO 2830 000

3265 DIVIDED FLOW

| | | | | | | | | | |
|---|---|---|---|---|---|---|---|---|---|
| 2830 000 | 22 83 | 607 73 | 600 33 | 00 | 608 19 | 46 | 03 | 02 | 598 43 |
| 19000 0 | 8976 1 | 8071 9 | 1952 0 | 1393 9 | 1852 5 | 471 5 | 262 0 | 38 7 | 596 10 |
| 16 | 6 44 | 4 36 | 4 14 | 021 | 045 | 028 | 000 | 584 90 | 15 95 |
| 000440 | 27 | 100 | 130 | 2 | 18 | 0 | 00 | 338 89 | 415 85 |

| | | | | | | | | | |
|---|---|---|---|---|---|---|---|---|---|
| SECNO | DEPTH | CWSEL | CRIWS | WSELK | EG | HV | HL | OLOSS | L-BANK ELEV |
| Q | QLOB | QCH | QROB | ALOB | ACH | AROB | VOL | TWA | R-BANK ELEV |
| TIME | VLOB | VCH | VROB | XNL | XNCH | XNR | WTN | ELMIN | SSTA |
| SLOPE | XLOBL | XLCH | XLOBR | ITRIAL | IDC | ICONT | CORAR | TOPWID | ENDST |

FLOW DISTRIBUTION FOR SECNO= 2830 00 CWSEL= 607 73

| STA= | 16 | 66 | 152 | 179 | 208 | 216 | 228 | 229 | 342 | 366 | 398 | 416 |
|---|---|---|---|---|---|---|---|---|---|---|---|---|
| PER Q= | 7 2 | 8 2 | 11 4 | 13 0 | 3 9 | 3 5 | 2 | 42 5 | 4 2 | 5 5 | 6 | |
| AREA= | 297 9 | 262 0 | 286 3 | 319 3 | 92 4 | 126 6 | 9 3 | 1852 5 | 219 5 | 204 9 | 47 0 | |
| VEL= | 4 6 | 5 9 | 7 6 | 7 7 | 7 9 | 5 2 | 3 1 | 4 4 | 3 6 | 5 1 | 2 3 | |
| DEPTH= | 6 0 | 3 0 | 10 7 | 11 0 | 11 5 | 10 2 | 9 3 | 16 4 | 9 3 | 6 3 | 2 6 | |

1490 NH CARD USED
*SECNO 2860 000

3265 DIVIDED FLOW

| | | | | | | | | | |
|---|---|---|---|---|---|---|---|---|---|
| 2860 000 | 19 96 | 607 76 | 600 10 | 00 | 608 20 | 43 | 01 | 00 | 595 98 |
| 19000 0 | 9016 7 | 7746 3 | 2237 0 | 1421 2 | 1878 9 | 564 2 | 263 8 | 38 9 | 595 98 |
| 16 | 6 34 | 4 12 | 3 97 | 020 | 045 | 028 | 000 | 587 80 | 16 40 |
| 000383 | 24 | 17 | 29 | 2 | 11 | 0 | 00 | 338 01 | 417 41 |

FLOW DISTRIBUTION FOR SECNO= 2860 00 CWSEL= 607 76

| STA= | 16 | 49 | 80 | 156 | 177 | 199 | 211 | 221 | 221 | 336 | 356 | 398 | 417 |
|---|---|---|---|---|---|---|---|---|---|---|---|---|---|
| PER Q= | 7 4 | 9 3 | 3 3 | 8 8 | 9 1 | 5 0 | 4 5 | 1 | 40 8 | 3 4 | 7 3 | 1 1 | |
| AREA= | 247 0 | 315 4 | 132 6 | 236 2 | 239 8 | 129 1 | 116 0 | 5 1 | 1878 9 | 194 8 | 293 4 | 76 0 | |
| VEL= | 5 7 | 5 6 | 4 7 | 7 1 | 7 2 | 7 3 | 7 4 | 3 3 | 4 1 | 3 3 | 4 8 | 2 7 | |
| DEPTH= | 7 7 | 10 0 | 1 8 | 10 8 | 11 0 | 11 2 | 11 6 | 11 8 | 16 4 | 9 6 | 7 1 | 3 8 | |

1490 NH CARD USED
*SECNO 2890 000

| | | | | | | | | | |
|---|---|---|---|---|---|---|---|---|---|
| 2890 000 | 19 37 | 607 83 | 601 09 | 00 | 608 26 | 43 | 06 | 00 | 595 81 |
| 19000 0 | 5503 8 | 8858 3 | 4637 9 | 1030 7 | 1933 3 | 735 9 | 277 0 | 40 1 | 595 84 |
| 17 | 5 34 | 4 58 | 6 30 | 025 | 045 | 020 | 000 | 588 46 | 53 34 |
| 000446 | 135 | 149 | 192 | 0 | 16 | 0 | 00 | 350 65 | 403 99 |

FLOW DISTRIBUTION FOR SECNO= 2890 00 CWSEL= 607 83

| STA= | 53 | 78 | 96 | 112 | 125 | 144 | 169 | 177 | 290 | 297 | 341 | 363 | 404 |
|---|---|---|---|---|---|---|---|---|---|---|---|---|---|
| PER Q= | 3 3 | 5 6 | 5 4 | 4 3 | 5 2 | 3 7 | 1 6 | 46 6 | 3 1 | 15 3 | 4 3 | 1 7 | |
| AREA= | 145 6 | 159 2 | 146 9 | 120 5 | 153 1 | 215 2 | 90 1 | 1933 3 | 74 7 | 415 2 | 145 5 | 100 4 | |
| VEL= | 4 3 | 6 7 | 7 0 | 6 7 | 6 4 | 3 2 | 3 5 | 4 6 | 7 9 | 7 0 | 5 6 | 3 3 | |
| DEPTH= | 5 9 | 8 8 | 9 4 | 8 9 | 8 2 | 8 4 | 11 3 | 17 1 | 11 5 | 9 4 | 6 8 | 2 4 | |

| | | | | | | | | | |
|---|---|---|---|---|---|---|---|---|---|
| SECNO | DEPTH | CWSEL | CRIWS | WSELK | EG | HV | HL | OLOSS | L-BANK ELEV |
| Q | QLOB | QCH | QROB | ALOB | ACH | AROB | VOL | TWA | R-BANK ELEV |
| TIME | VLOB | VCH | VROB | XNL | XNCH | XNR | WTN | ELMIN | SSTA |
| SLOPE | XLOBL | XLCH | XLOBR | ITRIAL | IDC | ICONT | CORAR | TOPWID | ENDST |

1490 NH CARD USED
*SECNO 2897 000

3370 NORMAL BRIDGE, NRD= 20 MIN ELTRD= 620 00 MAX ELLC= 615 00

| | | | | | | | | | |
|---|---|---|---|---|---|---|---|---|---|
| 2897 000 | 19 21 | 607 67 | 601 08 | 00 | 608 33 | 66 | 00 | 07 | 595 81 |
| 19000 0 | 6645 4 | 6526 9 | 5827 7 | 957 4 | 1670 0 | 718 1 | 277 1 | 40 1 | 595 84 |
| 17 | 6 94 | 3 91 | 8 12 | 024 | 045 | 020 | 000 | 588 46 | 53 47 |
| 000754 | 1 | 1 | 1 | 2 | 12 | 0 | -299 24 | 349 26 | 402 73 |

FLOW DISTRIBUTION FOR SECNO= 2897 00 CWSEL= 607 67

| STA= | 53 | 78 | 96 | 103 | 112 | 125 | 144 | 169 | 177 | 290 | 297 | 341 | 352 |
|---|---|---|---|---|---|---|---|---|---|---|---|---|---|
| PER Q= | 4 1 | 7 0 | 3 0 | 3 8 | 5 4 | 6 5 | 3 1 | 2 1 | 34 4 | 3 9 | 19 3 | 3 4 | |
| AREA= | 141 8 | 156 4 | 63 5 | 80 8 | 118 4 | 150 2 | 157 4 | 88 8 | 1670 0 | 73 7 | 408 2 | 81 7 | |
| VEL= | 5 5 | 8 6 | 9 0 | 8 9 | 8 7 | 8 2 | 3 7 | 4 5 | 3 9 | 10 2 | 9 0 | 7 8 | |
| DEPTH= | 5 8 | 8 6 | 9 3 | 9 2 | 8 8 | 8 1 | 6 2 | 11 1 | 14 8 | 11 3 | 9 2 | 7 5 | |

| STA= | 352 | 381 | 403 |
|---|---|---|---|
| PER Q= | 3 6 | 5 | |
| AREA= | 123 9 | 30 6 | |
| VEL= | 5 5 | 3 2 | |
| DEPTH= | 4 2 | 1 4 | |

1490 NH CARD USED
*SECNO 2899 000

3370 NORMAL BRIDGE, NRD= 20 MIN ELTRD= 620 00 MAX ELLC= 615 00

| | | | | | | | | | |
|---|---|---|---|---|---|---|---|---|---|
| 2899 000 | 19 24 | 607 70 | 601 08 | 00 | 608 35 | 65 | 02 | 00 | 595 81 |
| 19000 0 | 6649 7 | 6516 8 | 5833 5 | 959 6 | 1672 0 | 720 3 | 279 6 | 40 4 | 595 84 |
| 17 | 6 93 | 3 90 | 8 10 | 024 | 045 | 020 | 000 | 588 46 | 53 45 |
| 000749 | 33 | 33 | 33 | 0 | 12 | 0 | -299 65 | 349 44 | 402 90 |

FLOW DISTRIBUTION FOR SECNO= 2899 00 CWSEL= 607 70

| | | | | | | | | | |
|---|---|---|---|---|---|---|---|---|---|
| SECNO | DEPTH | CWSEL | CRIWS | WSELK | EG | HV | HL | OLOSS | L-BANK ELEV |
| Q | QLOB | QCH | QROB | ALOB | ACH | AROB | VOL | TWA | R-BANK ELEV |
| TIME | VLOB | VCH | VROB | XNL | XNCH | XNR | WTN | ELMIN | SSTA |
| SLOPE | XLOBL | XLCH | XLOBR | ITRIAL | IDC | ICONT | CORAR | TOPWID | ENDST |

| STA= | 53 | 78 | 96 | 103 | 112 | 125 | 144 | 169 | 177 | 290 | 297 | 341 | 352 |
|---|---|---|---|---|---|---|---|---|---|---|---|---|---|
| PER Q= | 4 1 | 7 0 | 3 0 | 3 8 | 5 4 | 6 5 | 3 1 | 2 1 | 34 3 | 3 9 | 19 3 | 3 4 | |
| AREA= | 142 2 | 156 7 | 63 7 | 81 0 | 118 6 | 150 6 | 157 8 | 89 0 | 1672 0 | 73 8 | 409 1 | 81 9 | |
| VEL= | 5 5 | 8 5 | 9 0 | 8 9 | 8 6 | 8 2 | 3 7 | 4 5 | 3 9 | 10 2 | 9 0 | 7 8 | |
| DEPTH= | 5 8 | 8 6 | 9 3 | 9 2 | 8 8 | 8 1 | 6 2 | 11 1 | 14 8 | 11 3 | 9 3 | 7 5 | |

| STA= | 352 | 381 | 403 |
|---|---|---|---|
| PER Q= | 3 6 | 5 | |
| AREA= | 124 5 | 31 0 | |
| VEL= | 5 5 | 3 2 | |
| DEPTH= | 4 2 | 1 4 | |

1490 NH CARD USED

*SECNO 2900 000

| | | | | | | | | | |
|---|---|---|---|---|---|---|---|---|---|
| 2900 000 | 19 39 | 607 89 | 601 22 | 00 | 608 37 | 48 | 00 | 02 | 596 44 |
| 19000 0 | 3359 7 | 9301 2 | 6339 2 | 626 1 | 1958 5 | 951 7 | 279 7 | 40 4 | 596 00 |
| 17 | 5 37 | 4 75 | 6 66 | 023 | 045 | 020 | 000 | 588 50 | 62 79 |
| 000484 | 1 | 1 | 1 | 2 | 14 | 0 | 00 | 332 77 | 395 56 |

FLOW DISTRIBUTION FOR SECNO= 2900 00 CWSEL= 607 89

| STA= | 63 | 95 | 112 | 143 | 154 | 269 | 291 | 317 | 337 | 357 | 379 | 396 |
|---|---|---|---|---|---|---|---|---|---|---|---|---|
| PER Q= | 4 8 | 3 8 | 7 5 | 1 6 | 49 0 | 9 7 | 9 5 | 5 7 | 4 8 | 3 2 | 5 | |
| AREA= | 174 4 | 120 4 | 230 9 | 100 4 | 1958 5 | 232 4 | 247 7 | 161 0 | 149 4 | 118 9 | 42 3 | |
| VEL= | 5 2 | 6 0 | 6 1 | 3 1 | 4 7 | 7 9 | 7 3 | 6 7 | 6 1 | 5 1 | 2 2 | |
| DEPTH= | 5 5 | 7 1 | 7 3 | 9 5 | 17 0 | 10 7 | 9 4 | 8 3 | 7 3 | 5 5 | 2 5 | |

1490 NH CARD USED

*SECNO 3000 000

| | | | | | | | | | |
|---|---|---|---|---|---|---|---|---|---|
| 3000 000 | 18 92 | 608 02 | 601 51 | 00 | 608 53 | 52 | 15 | 01 | 597 72 |
| 19000 0 | 1498 5 | 9084 7 | 8416 9 | 251 0 | 1409 8 | 1728 0 | 297 8 | 42 1 | 596 00 |
| 18 | 5 97 | 6 44 | 4 87 | 028 | 045 | 045 | 000 | 589 10 | 18 40 |
| 000964 | 205 | 228 | 234 | 1 | 14 | 0 | 00 | 299 65 | 318 05 |

FLOW DISTRIBUTION FOR SECNO= 3000 00 CWSEL= 608 02

| STA= | 18 | 55 | 60 | 145 | 187 | 222 | 232 | 253 | 284 | 307 | 318 |
|---|---|---|---|---|---|---|---|---|---|---|---|
| PER Q= | 6 9 | 1 0 | 47 8 | 14 1 | 11 0 | 3 0 | 5 6 | 6 9 | 3 0 | 7 | |
| AREA= | 205 6 | 45 5 | 1409 8 | 499 5 | 400 6 | 114 8 | 215 3 | 289 4 | 157 0 | 51 5 | |
| VEL= | 6 3 | 4 3 | 6 4 | 5 3 | 5 2 | 5 0 | 4 9 | 4 6 | 3 6 | 2 5 | |
| DEPTH= | 5 6 | 9 5 | 16 5 | 11 9 | 11 5 | 10 9 | 10 6 | 9 4 | 6 7 | 4 8 | |

| | | | | | | | | | |
|---|---|---|---|---|---|---|---|---|---|
| SECNO | DEPTH | CWSEL | CRIWS | WSELK | EG | HV | HL | OLOSS | L-BANK ELEV |
| Q | QLOB | QCH | QROB | ALOB | ACH | AROB | VOL | TWA | R-BANK ELEV |
| TIME | VLOB | VCH | VROB | XNL | XNCH | XNR | WTN | ELMIN | SSTA |
| SLOPE | XLOBL | XLCH | XLOBR | ITRIAL | IDC | ICONT | CORAR | TOPWID | ENDST |

*SECNO 3100 000

3302 WARNING CONVEYANCE CHANGE OUTSIDE OF ACCEPTABLE RANGE, KRATIO = 1 54

3470 ENCROACHMENT STATIONS= 119 0 658 0 TYPE= 1 TARGET= 539 050

| | | | | | | | | | |
|---|---|---|---|---|---|---|---|---|---|
| 3100 000 | 18 82 | 608 42 | 598 90 | 00 | 608 65 | 23 | 09 | 03 | 599 90 |
| 19000 0 | 969 3 | 13789 1 | 4241 6 | 493 1 | 3325 7 | 1326 2 | 312 4 | 43 5 | 594 00 |
| 20 | 1 97 | 4 15 | 3 20 | 045 | 045 | 045 | 000 | 589 60 | 119 00 |
| 000409 | 278 | 177 | 73 | 2 | 8 | 0 | 00 | 467 00 | 586 00 |

FLOW DISTRIBUTION FOR SECNO= 3100 00 CWSEL= 608 42

| STA= | 119 | 237 | 243 | 457 | 479 | 503 | 528 | 549 | 586 |
|---|---|---|---|---|---|---|---|---|---|
| PER Q= | 4 5 | 6 | 72 6 | 6 1 | 5 2 | 4 4 | 3 0 | 3 6 | |
| AREA= | 445 5 | 47 6 | 3325 7 | 304 3 | 281 4 | 265 3 | 195 3 | 280 0 | |
| VEL= | 1 9 | 2 6 | 4 1 | 3 8 | 3 5 | 3 2 | 2 9 | 2 4 | |
| DEPTH= | 3 8 | 7 8 | 15 6 | 13 6 | 12 0 | 10 4 | 9 2 | 7 7 | |

*SECNO 3200 000

3302 WARNING CONVEYANCE CHANGE OUTSIDE OF ACCEPTABLE RANGE, KRATIO = 60

| | | | | | | | | | |
|---|---|---|---|---|---|---|---|---|---|
| 3200 000 | 18 62 | 608 33 | 601 10 | 00 | 608 95 | 62 | 19 | 12 | 600 10 |
| 19000 0 | 895 3 | 13408 3 | 4696 4 | 252 3 | 1974 9 | 894 0 | 340 3 | 46 0 | 593 89 |
| 21 | 3 55 | 6 79 | 5 25 | 045 | 045 | 045 | 000 | 589 71 | 41 09 |
| 001145 | 350 | 308 | 244 | 2 | 14 | 0 | 00 | 287 54 | 328 63 |

FLOW DISTRIBUTION FOR SECNO= 3200 00 CWSEL= 608 33

| STA= | 41 | 66 | 82 | 87 | 93 | 223 | 247 | 258 | 261 | 297 | 329 |
|---|---|---|---|---|---|---|---|---|---|---|---|
| PER Q= | 7 | 2 0 | 8 | 1 2 | 70 6 | 10 6 | 4 0 | 1 4 | 7 7 | 1 0 | |
| AREA= | 63 2 | 102 2 | 36 2 | 50 8 | 1974 9 | 319 3 | 128 6 | 45 1 | 311 7 | 89 4 | |
| VEL= | 2 1 | 3 8 | 4 3 | 4 4 | 6 8 | 6 3 | 6 0 | 5 8 | 4 7 | 2 2 | |
| DEPTH= | 2 6 | 6 2 | 7 5 | 8 0 | 15 2 | 13 5 | 12 4 | 11 9 | 8 6 | 2 9 | |

*SECNO 3300 000

| | | | | | | | | | |
|---|---|---|---|---|---|---|---|---|---|
| SECNO | DEPTH | CWSEL | CRIWS | WSELK | EG | HV | HL | OLOSS | L-BANK ELEV |
| Q | QLOB | QCH | QROB | ALOB | ACH | AROB | VOL | TWA | R-BANK ELEV |
| TIME | VLOB | VCH | VROB | XNL | XNCH | XNR | WTN | ELMIN | SSTA |
| SLOPE | XLOBL | XLCH | XLOBR | ITRIAL | IDC | ICONT | CORAR | TOPWID | ENDST |

3301 HV CHANGED MORE THAN HVINS

3302 WARNING CONVEYANCE CHANGE OUTSIDE OF ACCEPTABLE RANGE, KRATIO = 65

| | | | | | | | | | |
|---|---|---|---|---|---|---|---|---|---|
| 3300 000 | 18 39 | 608 12 | 603 69 | 00 | 609 47 | 1 35 | 30 | 22 | 600 48 |
| 19000 0 | 1098 9 | 15997 8 | 1903 3 | 233 0 | 1620 4 | 320 8 | 350 9 | 47 0 | 597 46 |
| 21 | 4 72 | 9 87 | 5 93 | 045 | 045 | 045 | 000 | 589 73 | 74 65 |
| 002708 | 153 | 187 | 148 | 2 | 19 | 0 | 00 | 235 07 | 309 72 |

FLOW DISTRIBUTION FOR SECNO= 3300 00 CWSEL= 608 12

| STA= | 75 | 89 | 133 | 249 | 274 | 306 | 310 |
|---|---|---|---|---|---|---|---|
| PER Q= | 1 | 5 6 | 84 2 | 7 8 | 2 2 | 0 | |
| AREA= | 14 5 | 218 5 | 1620 4 | 209 9 | 109 6 | 1 3 | |
| VEL= | 1 8 | 4 9 | 9 9 | 7 0 | 3 9 | 8 | |
| DEPTH= | 1 0 | 4 9 | 14 0 | 8 4 | 3 4 | 4 | |

*SECNO 3400 000

3301 HV CHANGED MORE THAN HVINS

3302 WARNING CONVEYANCE CHANGE OUTSIDE OF ACCEPTABLE RANGE, KRATIO = 1 54

| | | | | | | | | | |
|---|---|---|---|---|---|---|---|---|---|
| 3400 000 | 19 61 | 609 31 | 603 05 | 00 | 609 85 | 54 | 30 | 08 | 599 87 |
| 19000 0 | 3704 8 | 14634 7 | 660 5 | 962 6 | 2279 8 | 189 5 | 362 8 | 48 5 | 599 85 |
| 22 | 3 85 | 6 42 | 3 48 | 045 | 045 | 045 | 000 | 589 70 | 118 92 |
| 001145 | 254 | 167 | 163 | 2 | 19 | 0 | 00 | 395 16 | 514 08 |

FLOW DISTRIBUTION FOR SECNO= 3400 00 CWSEL= 609 31

| STA= | 119 | 215 | 261 | 282 | 307 | 469 | 495 | 514 |
|---|---|---|---|---|---|---|---|---|
| PER Q= | 3 8 | 6 2 | 3 8 | 5 8 | 77 0 | 3 2 | 3 | |
| AREA= | 270 8 | 301 5 | 162 3 | 228 1 | 2279 8 | 160 8 | 28 8 | |
| VEL= | 2 7 | 3 9 | 4 4 | 4 8 | 6 4 | 3 8 | 1 7 | |
| DEPTH= | 2 8 | 6 5 | 7 8 | 8 9 | 14 1 | 6 2 | 1 5 | |

| | | | | | | | | | |
|---|---|---|---|---|---|---|---|---|---|
| SECNO | DEPTH | CWSEL | CRIWS | WSELK | EG | HV | HL | OLOSS | L-BANK ELEV |
| Q | QLOB | QCH | QROB | ALOB | ACH | AROB | VOL | TWA | R-BANK ELEV |
| TIME | VLOB | VCH | VROB | XNL | XNCH | XNR | WTN | ELMIN | SSTA |
| SLOPE | XLOBL | XLCH | XLOBR | ITRIAL | IDC | ICONT | CORAR | TOPWID | ENDST |

*SECNO 3500 000

| | | | | | | | | | |
|---|---|---|---|---|---|---|---|---|---|
| 3500 000 | 20 56 | 609 36 | 601 30 | 00 | 610 11 | 75 | 19 | 06 | 598 95 |
| 19000 0 | 928 9 | 17327 1 | 744 0 | 255 4 | 2415 1 | 200 7 | 375 3 | 49 9 | 600 20 |
| 23 | 3 64 | 7 17 | 3 71 | 045 | 045 | 045 | 000 | 588 80 | 95 17 |
| 001194 | 253 | 155 | 129 | 2 | 14 | 0 | 00 | 252 20 | 347 38 |

FLOW DISTRIBUTION FOR SECNO= 3500 00 CWSEL= 609 36

| STA= | 95 | 155 | 306 | 325 | 347 |
|---|---|---|---|---|---|
| PER Q= | 4 9 | 91 2 | 3 1 | 9 | |
| AREA= | 255 4 | 2415 1 | 137 3 | 63 4 | |
| VEL= | 3 6 | 7 2 | 4 2 | 2 6 | |
| DEPTH= | 4 3 | 16 0 | 7 1 | 2 8 | |

*SECNO 3600 000

| | | | | | | | | | |
|---|---|---|---|---|---|---|---|---|---|
| 3600 000 | 20 23 | 609 37 | 601 72 | 00 | 610 53 | 1 16 | 29 | 12 | 600 40 |
| 19000 0 | 377 1 | 18317 9 | 305 0 | 96 8 | 2088 8 | 87 6 | 387 5 | 50 9 | 600 56 |
| 24 | 3 90 | 8 77 | 3 48 | 045 | 045 | 045 | 000 | 589 14 | 215 63 |
| 001735 | 183 | 207 | 221 | 2 | 14 | 0 | 00 | 168 05 | 383 69 |

FLOW DISTRIBUTION FOR SECNO= 3600 00 CWSEL= 609 37

| STA= | 216 | 232 | 237 | 364 | 384 |
|---|---|---|---|---|---|
| PER Q= | 9 | 1 1 | 96 4 | 1 6 | |
| AREA= | 57 0 | 39 8 | 2088 8 | 87 6 | |
| VEL= | 3 0 | 5 2 | 8 8 | 3 5 | |
| DEPTH= | 3 5 | 7 9 | 16 5 | 4 4 | |

*SECNO 3700 000

3265 DIVIDED FLOW

3301 HV CHANGED MORE THAN HVINS

| | | | | | | | | | |
|---|---|---|---|---|---|---|---|---|---|
| 3700 000 | 20 10 | 610 39 | 601 51 | 00 | 611 01 | 62 | 43 | 05 | 604 12 |
| 19000 0 | 157 7 | 17107 8 | 1734 5 | 72 9 | 2612 4 | 514 1 | 408 8 | 52 8 | 600 63 |
| 25 | 2 16 | 6 55 | 3 37 | 045 | 045 | 045 | 000 | 590 29 | 97 06 |
| 000977 | 201 | 330 | 450 | 2 | 11 | 0 | 00 | 329 05 | 505 80 |

| | | | | | | | | | |
|---|---|---|---|---|---|---|---|---|---|
| SECNO | DEPTH | CWSEL | CRIWS | WSELK | EG | HV | HL | OLOSS | L-BANK ELEV |
| Q | QLOB | QCH | QROB | ALOB | ACH | AROB | VOL | TWA | R-BANK ELEV |
| TIME | VLOB | VCH | VROB | XNL | XNCH | XNR | WTN | ELMIN | SSTA |
| SLOPE | XLOBL | XLCH | XLOBR | ITRIAL | IDC | ICONT | CORAR | TOPWID | ENDST |

FLOW DISTRIBUTION FOR SECNO= 3700 00 CWSEL= 610 39

| STA= | 97 | 239 | 400 | 427 | 461 | 506 |
|---|---|---|---|---|---|---|
| PER Q= | 8 | 90 0 | 4 7 | 3 2 | 1 2 | |
| AREA= | 72 8 | 2612 4 | 218 5 | 186 9 | 108 8 | |
| VEL= | 2 2 | 6 5 | 4 1 | 3 2 | 2 1 | |
| DEPTH= | 5 | 16 3 | 8 0 | 5 5 | 2 4 | |

*SECNO 3800 000

| | | | | | | | | | |
|---|---|---|---|---|---|---|---|---|---|
| 3800 000 | 19 24 | 610 91 | 601 34 | 00 | 611 24 | 33 | 20 | 03 | 603 87 |
| 19000 0 | 1159 6 | 16920 6 | 919 8 | 506 5 | 3534 0 | 358 9 | 433 2 | 55 4 | 600 40 |
| 27 | 2 29 | 4 79 | 2 56 | 045 | 045 | 045 | 000 | 591 67 | 61 72 |
| 000564 | 160 | 260 | 499 | 2 | 11 | 0 | 00 | 430 75 | 492 47 |

FLOW DISTRIBUTION FOR SECNO= 3800 00 CWSEL= 610 91

| STA= | 62 | 146 | 175 | 408 | 448 | 492 |
|---|---|---|---|---|---|---|
| PER Q= | 3 9 | 2 2 | 89 1 | 4 3 | 6 | |
| AREA= | 340 7 | 165 8 | 3534 0 | 275 8 | 83 1 | |
| VEL= | 2 2 | 2 5 | 4 8 | 2 9 | 1 3 | |
| DEPTH= | 4 0 | 5 7 | 15 2 | 7 0 | 1 9 | |

*SECNO 4000 000

| | | | | | | | | | |
|---|---|---|---|---|---|---|---|---|---|
| 4000 000 | 17 74 | 611 12 | 601 88 | 00 | 611 56 | 44 | 29 | 03 | 603 96 |
| 19000 0 | 182 5 | 18797 1 | 20 4 | 90 3 | 3509 0 | 16 4 | 474 5 | 59 1 | 607 40 |
| 29 | 2 02 | 5 36 | 1 25 | 045 | 045 | 045 | 000 | 593 38 | 77 97 |
| 000742 | 350 | 452 | 549 | 2 | 14 | 0 | 00 | 291 79 | 369 75 |

FLOW DISTRIBUTION FOR SECNO= 4000 00 CWSEL= 611 12

| STA= | 78 | 122 | 359 | 370 |
|---|---|---|---|---|
| PER Q= | 1 0 | 98 9 | 1 | |
| AREA= | 90 3 | 3509 0 | 16 4 | |
| VEL= | 2 0 | 5 4 | 1 2 | |
| DEPTH= | 2 1 | 14 8 | 1 5 | |

THIS RUN EXECUTED 06MAY05 09 20 38

**********
HEC-2 WATER SURFACE PROFILES

Version 4 6 2, May 1991
**********

NOTE- ASTERISK (*) AT LEFT OF CROSS-SECTION NUMBER INDICATES MESSAGE IN SUMMARY OF ERRORS LIST

AME 14312BCC HC2

SUMMARY PRINTOUT

| | SECNO | Q | CWSEL | CRIWS | CUMDS |
|---|---|---|---|---|---|
| | 100 000 | 19000 00 | 559 00 | 556 19 | 00 |
| | 200 000 | 19000 00 | 559 72 | 555 39 | 118 00 |
| * | 400 000 | 19000 00 | 559 45 | 557 48 | 302 00 |
| | 500 000 | 19000 00 | 560 52 | 557 63 | 462 00 |
| * | 600 000 | 19000 00 | 560 43 | 560 43 | 627 00 |
| * | 700 000 | 19000 00 | 563 25 | 561 13 | 880 00 |
| | 800 000 | 19000 00 | 563 63 | 561 77 | 1139 00 |
| | 900 000 | 19000 00 | 564 25 | 561 14 | 1501 00 |
| | 990 000 | 19000 00 | 564 41 | 561 23 | 1742 00 |
| | 1001 000 | 19000 00 | 565 51 | 562 34 | 2029 00 |
| * | 1100 000 | 19000 00 | 565 65 | 565 44 | 2364 00 |
| | 1150 000 | 19000 00 | 566 93 | 566 37 | 2587 00 |
| * | 1175 000 | 19000 00 | 568 61 | 564 47 | 2702 00 |
| | 1200 000 | 19000 00 | 568 47 | 566 72 | 2732 00 |
| * | 1225 000 | 18740 00 | 568 60 | 568 60 | 2737 00 |
| * | 1250 000 | 18740 00 | 569 74 | 568 65 | 2757 00 |
| * | 1300 000 | 19000 00 | 570 32 | 568 16 | 2762 00 |

| | SECNO | Q | CWSEL | CRIWS | CUMDS |
|---|---|---|---|---|---|
| * | 1350 000 | 19000 00 | 570 95 | 570 95 | 2873 00 |
| * | 1400 000 | 19000 00 | 572 75 | 572 75 | 3022 00 |
| * | 1500 000 | 19000 00 | 573 77 | 573 77 | 3285 00 |
| * | 1600 000 | 19000 00 | 578 29 | 578 29 | 3436 00 |
| * | 1700 000 | 19000 00 | 581 80 | 577 13 | 3613 00 |
| * | 1800 000 | 19000 00 | 582 36 | 579 26 | 3926 00 |
| | 1900 000 | 19000 00 | 583 25 | 581 35 | 4162 00 |
| * | 2000 000 | 19000 00 | 585 32 | 585 32 | 4406 00 |
| * | 2100 000 | 19000 00 | 588 76 | 588 76 | 4610 00 |
| * | 2200 000 | 19000 00 | 594 02 | 594 02 | 4855 00 |
| * | 2300 000 | 19000 00 | 599 29 | 599 29 | 5070 00 |
| * | 2400 000 | 19000 00 | 604 10 | 604 10 | 5336 00 |
| * | 2500 000 | 19000 00 | 606 03 | 601 22 | 5486 00 |
| | 2600 000 | 19000 00 | 606 32 | 601 79 | 5649 00 |
| | 2700 000 | 19000 00 | 606 47 | 601 75 | 5777 00 |
| * | 2800 000 | 19000 00 | 607 47 | 601 07 | 5964 00 |
| | 2830 000 | 19000 00 | 607 73 | 600 33 | 6064 00 |
| | 2860 000 | 19000 00 | 607 76 | 600 10 | 6081 00 |
| | 2890 000 | 19000 00 | 607 83 | 601 09 | 6230 00 |
| | 2897 000 | 19000 00 | 607 67 | 601 08 | 6231 00 |
| | 2899 000 | 19000 00 | 607 70 | 601 08 | 6264 00 |
| | 2900 000 | 19000 00 | 607 89 | 601 22 | 6265 00 |
| | 3000 000 | 19000 00 | 608 02 | 601 51 | 6493 00 |
| * | 3100 000 | 19000 00 | 608 42 | 598 90 | 6670 00 |
| * | 3200 000 | 19000 00 | 608 33 | 601 10 | 6978 00 |
| * | 3300 000 | 19000 00 | 608 12 | 603 69 | 7165 00 |

| | SECNO | Q | CWSEL | CRIWS | CUMDS |
|---|---|---|---|---|---|
| * | 3400 000 | 19000 00 | 609 31 | 603 05 | 7332 00 |
| | 3500 000 | 19000 00 | 609 36 | 601 30 | 7487 00 |
| | 3600 000 | 19000 00 | 609 37 | 601 72 | 7694 00 |
| | 3700 000 | 19000 00 | 610 39 | 601 51 | 8024 00 |
| | 3800 000 | 19000 00 | 610 91 | 601 34 | 8284 00 |
| | 4000 000 | 19000 00 | 611 12 | 601 88 | 8736 00 |

AME 14312BCC HC2

SUMMARY PRINTOUT TABLE 150

| | SECNO | XLCH | ELTRD | ELLC | ELMIN | Q | CWSEL | CRIWS | EG | 10*KS | VCH | AREA | 01K |
|---|---|---|---|---|---|---|---|---|---|---|---|---|---|
| | 100 000 | 00 | 00 | 00 | 541 50 | 19000 00 | 559 00 | 556 19 | 560 33 | 25 64 | 11 12 | 2394 02 | 3752 0 |
| | 200 000 | 118 00 | 00 | 00 | 541 70 | 19000 00 | 559 72 | 555 39 | 560 55 | 17 09 | 9 10 | 2789 38 | 4596 2 |
| * | 400 000 | 184 00 | 00 | 00 | 542 80 | 19000 00 | 559 45 | 557 48 | 561 16 | 39 63 | 13 35 | 2062 37 | 3018 0 |
| | 500 000 | 160 00 | 00 | 00 | 543 31 | 19000 00 | 560 52 | 557 63 | 561 62 | 21 22 | 8 86 | 2267 31 | 4124 8 |
| * | 600 000 | 165 00 | 00 | 00 | 546 60 | 19000 00 | 560 43 | 560 43 | 563 00 | 68 49 | 14 00 | 1499 33 | 2295 9 |
| * | 700 000 | 253 00 | 00 | 00 | 548 10 | 19000 00 | 563 25 | 561 13 | 563 95 | 17 74 | 7 57 | 2865 54 | 4510 8 |
| | 800 000 | 259 00 | 00 | 00 | 548 13 | 19000 00 | 563 63 | 561 77 | 564 39 | 18 20 | 7 91 | 2867 75 | 4453 5 |
| | 900 000 | 362 00 | 00 | 00 | 548 20 | 19000 00 | 564 25 | 561 14 | 564 97 | 17 00 | 7 53 | 2869 46 | 4607 5 |
| | 990 000 | 241 00 | 00 | 00 | 549 53 | 19000 00 | 564 41 | 561 23 | 565 62 | 27 33 | 9 32 | 2257 03 | 3634 2 |
| | 1001 000 | 287 00 | 00 | 00 | 551 70 | 19000 00 | 565 51 | 562 34 | 566 21 | 16 03 | 7 19 | 2892 56 | 4745 9 |
| * | 1100 000 | 335 00 | 00 | 00 | 552 20 | 19000 00 | 565 65 | 565 44 | 567 58 | 59 93 | 12 45 | 1753 42 | 2454 3 |
| | 1150 000 | 223 00 | 00 | 00 | 552 18 | 19000 00 | 566 93 | 566 37 | 568 90 | 55 97 | 12 37 | 1746 31 | 2539 6 |
| * | 1175 000 | 115 00 | 00 | 00 | 553 25 | 19000 00 | 568 61 | 564 47 | 569 60 | 22 62 | 8 45 | 2470 43 | 3994 9 |
| | 1200 000 | 30 00 | 00 | 00 | 557 60 | 19000 00 | 568 47 | 566 72 | 569 91 | 37 91 | 10 31 | 2101 76 | 3085 8 |
| * | 1225 000 | 5 00 | 00 | 00 | 562 04 | 18740 00 | 568 60 | 568 60 | 570 84 | 21 68 | 12 99 | 1617 19 | 4025 1 |
| * | 1250 000 | 20 00 | 00 | 00 | 562 07 | 18740 00 | 569 74 | 568 65 | 571 13 | 11 00 | 10 34 | 2061 59 | 5649 8 |
| * | 1300 000 | 5 00 | 00 | 00 | 559 68 | 19000 00 | 570 32 | 568 16 | 571 27 | 25 97 | 8 20 | 2461 34 | 3728 0 |
| * | 1350 000 | 111 00 | 00 | 00 | 559 68 | 19000 00 | 570 95 | 570 95 | 573 00 | 61 18 | 12 50 | 1751 68 | 2429 1 |
| * | 1400 000 | 149 00 | 00 | 00 | 559 40 | 19000 00 | 572 75 | 572 75 | 575 03 | 64 10 | 14 04 | 1665 28 | 2373 0 |
| * | 1500 000 | 263 00 | 00 | 00 | 559 66 | 19000 00 | 573 77 | 573 77 | 577 35 | 75 62 | 16 10 | 1285 61 | 2184 9 |
| * | 1600 000 | 151 00 | 00 | 00 | 564 06 | 19000 00 | 578 29 | 578 29 | 582 36 | 85 96 | 16 59 | 1180 05 | 2049 3 |
| * | 1700 000 | 177 00 | 00 | 00 | 564 39 | 19000 00 | 581 80 | 577 13 | 583 22 | 19 18 | 9 44 | 1997 53 | 4338 2 |
| * | 1800 000 | 313 00 | 00 | 00 | 568 58 | 19000 00 | 582 36 | 579 26 | 584 11 | 41 65 | 10 60 | 1810 60 | 2944 0 |
| | 1900 000 | 236 00 | 00 | 00 | 570 82 | 19000 00 | 583 25 | 581 35 | 585 50 | 68 42 | 12 11 | 1611 47 | 2297 0 |

| | SECNO | XLCH | ELTRD | ELLC | ELMIN | Q | CWSEL | CRIWS | EG | 10*KS | VCH | AREA | 01K |
|---|---|---|---|---|---|---|---|---|---|---|---|---|---|
| * | 2000 000 | 244 00 | 00 | 00 | 571 60 | 19000 00 | 585 32 | 585 32 | 589 86 | 130 51 | 17 22 | 1124 15 | 1663 1 |
| * | 2100 000 | 204 00 | 00 | 00 | 574 39 | 19000 00 | 588 76 | 588 76 | 593 33 | 126 69 | 17 30 | 1144 38 | 1688 0 |
| * | 2200 000 | 245 00 | 00 | 00 | 577 70 | 19000 00 | 594 02 | 594 02 | 598 79 | 111 83 | 17 74 | 1109 31 | 1796 7 |
| * | 2300 000 | 215 00 | 00 | 00 | 583 21 | 19000 00 | 599 29 | 599 29 | 603 77 | 91 66 | 17 79 | 1166 66 | 1984 6 |
| * | 2400 000 | 266 00 | 00 | 00 | 584 75 | 19000 00 | 604 10 | 604 10 | 606 74 | 57 63 | 14 55 | 1534 89 | 2502 7 |
| * | 2500 000 | 150 00 | 00 | 00 | 584 92 | 19000 00 | 606 03 | 601 22 | 607 35 | 21 29 | 9 84 | 2208 95 | 4117 6 |
| | 2600 000 | 163 00 | 00 | 00 | 585 37 | 19000 00 | 606 32 | 601 79 | 607 65 | 15 76 | 8 33 | 2157 75 | 4786 0 |
| | 2700 000 | 128 00 | 00 | 00 | 585 40 | 19000 00 | 606 47 | 601 75 | 607 91 | 19 29 | 9 54 | 1975 06 | 4326 5 |
| * | 2800 000 | 187 00 | 00 | 00 | 584 95 | 19000 00 | 607 47 | 601 07 | 608 13 | 5 64 | 5 00 | 3098 80 | 7999 4 |
| | 2830 000 | 100 00 | 00 | 00 | 584 90 | 19000 00 | 607 73 | 600 33 | 608 19 | 4 40 | 4 36 | 3717 85 | 9061 9 |
| | 2860 000 | 17 00 | 00 | 00 | 587 80 | 19000 00 | 607 76 | 600 10 | 608 20 | 3 83 | 4 12 | 3864 22 | 9706 2 |
| | 2890 000 | 149 00 | 00 | 00 | 588 46 | 19000 00 | 607 83 | 601 09 | 608 26 | 4 46 | 4 58 | 3699 94 | 8993 1 |
| | 2897 000 | 1 00 | 620 00 | 615 00 | 588 46 | 19000 00 | 607 67 | 601 08 | 608 33 | 7 54 | 3 91 | 3345 45 | 6919 8 |
| | 2899 000 | 33 00 | 620 00 | 615 00 | 588 46 | 19000 00 | 607 70 | 601 08 | 608 35 | 7 49 | 3 90 | 3351 89 | 6942 0 |
| | 2900 000 | 1 00 | 00 | 00 | 588 50 | 19000 00 | 607 89 | 601 22 | 608 37 | 4 84 | 4 75 | 3536 34 | 8639 1 |
| | 3000 000 | 228 00 | 00 | 00 | 589 10 | 19000 00 | 608 02 | 601 51 | 608 53 | 9 64 | 6 44 | 3388 84 | 6119 9 |
| * | 3100 000 | 177 00 | 00 | 00 | 589 60 | 19000 00 | 608 42 | 598 90 | 608 65 | 4 09 | 4 15 | 5145 01 | 9396 6 |
| * | 3200 000 | 308 00 | 00 | 00 | 589 71 | 19000 00 | 608 33 | 601 10 | 608 95 | 11 45 | 6 79 | 3121 23 | 5615 0 |
| * | 3300 000 | 187 00 | 00 | 00 | 589 73 | 19000 00 | 608 12 | 603 69 | 609 47 | 27 08 | 9 87 | 2174 18 | 3651 3 |
| * | 3400 000 | 167 00 | 00 | 00 | 589 70 | 19000 00 | 609 31 | 603 05 | 609 85 | 11 45 | 6 42 | 3431 98 | 5615 4 |
| | 3500 000 | 155 00 | 00 | 00 | 588 80 | 19000 00 | 609 36 | 601 30 | 610 11 | 11 94 | 7 17 | 2871 18 | 5497 4 |
| | 3600 000 | 207 00 | 00 | 00 | 589 14 | 19000 00 | 609 37 | 601 72 | 610 53 | 17 35 | 8 77 | 2273 22 | 4561 9 |
| | 3700 000 | 330 00 | 00 | 00 | 590 29 | 19000 00 | 610 39 | 601 51 | 611 01 | 9 77 | 6 55 | 3199 42 | 6078 9 |
| | 3800 000 | 260 00 | 00 | 00 | 591 67 | 19000 00 | 610 91 | 601 34 | 611 24 | 5 64 | 4 79 | 4399 48 | 7998 5 |
| | 4000 000 | 452 00 | 00 | 00 | 593 38 | 19000 00 | 611 12 | 601 88 | 611 56 | 7 42 | 5 36 | 3615 66 | 6975 5 |

AME 14312BCC HC2

SUMMARY PRINTOUT TABLE 150

| | SECNO | Q | CWSEL | DIFWSP | DIFWSX | DIFKWS | TOPWID | XLCH |
|---|---|---|---|---|---|---|---|---|
| | 100 000 | 19000 00 | 559 00 | 00 | 00 | 00 | 289 99 | 00 |
| | 200 000 | 19000 00 | 559 72 | 00 | 72 | 00 | 277 23 | 118 00 |
| * | 400 000 | 19000 00 | 559 45 | 00 | - 27 | 00 | 252 83 | 184 00 |
| | 500 000 | 19000 00 | 560 52 | 00 | 1 07 | 00 | 342 70 | 160 00 |
| * | 600 000 | 19000 00 | 560 43 | 00 | - 08 | 00 | 282 10 | 165 00 |
| * | 700 000 | 19000 00 | 563 25 | 00 | 2 82 | 00 | 490 32 | 253 00 |
| | 800 000 | 19000 00 | 563 63 | 00 | 38 | 00 | 578 88 | 259 00 |
| | 900 000 | 19000 00 | 564 25 | 00 | 62 | 00 | 505 98 | 362 00 |
| | 990 000 | 19000 00 | 564 41 | 00 | 16 | 00 | 365 61 | 241 00 |
| | 1001 000 | 19000 00 | 565 51 | 00 | 1 10 | 00 | 410 64 | 287 00 |
| * | 1100 000 | 19000 00 | 565 65 | 00 | 14 | 00 | 361 35 | 335 00 |
| | 1150 000 | 19000 00 | 566 93 | 00 | 1 28 | 00 | 335 43 | 223 00 |
| * | 1175 000 | 19000 00 | 568 61 | 00 | 1 69 | 00 | 368 81 | 115 00 |
| | 1200 000 | 19000 00 | 568 47 | 00 | - 15 | 00 | 366 57 | 30 00 |
| * | 1225 000 | 18740 00 | 568 60 | 00 | 14 | 00 | 369 90 | 5 00 |
| * | 1250 000 | 18740 00 | 569 74 | 00 | 1 14 | 00 | 415 22 | 20 00 |
| * | 1300 000 | 19000 00 | 570 32 | 00 | 58 | 00 | 428 58 | 5 00 |
| * | 1350 000 | 19000 00 | 570 95 | 00 | 62 | 00 | 464 10 | 111 00 |
| * | 1400 000 | 19000 00 | 572 75 | 00 | 1 81 | 00 | 367 70 | 149 00 |
| * | 1500 000 | 19000 00 | 573 77 | 00 | 1 02 | 00 | 178 95 | 263 00 |
| * | 1600 000 | 19000 00 | 578 29 | 00 | 4 52 | 00 | 146 05 | 151 00 |
| * | 1700 000 | 19000 00 | 581 80 | 00 | 3 52 | 00 | 173 97 | 177 00 |
| * | 1800 000 | 19000 00 | 582 36 | 00 | 56 | 00 | 193 50 | 313 00 |
| | 1900 000 | 19000 00 | 583 25 | 00 | 89 | 00 | 192 62 | 236 00 |

| | SECNO | Q | CWSEL | DIFWSP | DIFWSX | DIFKWS | TOPWID | XLCH |
|---|---|---|---|---|---|---|---|---|
| * | 2000 000 | 19000 00 | 585 32 | 00 | 2 07 | 00 | 129 11 | 244 00 |
| * | 2100 000 | 19000 00 | 588 76 | 00 | 3 44 | 00 | 137 41 | 204 00 |
| * | 2200 000 | 19000 00 | 594 02 | 00 | 5 25 | 00 | 120 67 | 245 00 |
| * | 2300 000 | 19000 00 | 599 29 | 00 | 5 27 | 00 | 122 27 | 215 00 |
| * | 2400 000 | 19000 00 | 604 10 | 00 | 4 82 | 00 | 290 86 | 266 00 |
| * | 2500 000 | 19000 00 | 606 03 | 00 | 1 93 | 00 | 304 96 | 150 00 |
| | 2600 000 | 19000 00 | 606 32 | 00 | 28 | 00 | 240 95 | 163 00 |
| | 2700 000 | 19000 00 | 606 47 | 00 | 15 | 00 | 186 70 | 128 00 |
| * | 2800 000 | 19000 00 | 607 47 | 00 | 99 | 00 | 330 78 | 187 00 |
| | 2830 000 | 19000 00 | 607 73 | 00 | 26 | 00 | 338 89 | 100 00 |
| | 2860 000 | 19000 00 | 607 76 | 00 | 04 | 00 | 338 01 | 17 00 |
| | 2890 000 | 19000 00 | 607 83 | 00 | 06 | 00 | 350 65 | 149 00 |
| | 2897 000 | 19000 00 | 607 67 | 00 | - 16 | 00 | 349 26 | 1 00 |
| | 2899 000 | 19000 00 | 607 70 | 00 | 03 | 00 | 349 44 | 33 00 |
| | 2900 000 | 19000 00 | 607 89 | 00 | 19 | 00 | 332 77 | 1 00 |
| | 3000 000 | 19000 00 | 608 02 | 00 | 13 | 00 | 299 65 | 228 00 |
| * | 3100 000 | 19000 00 | 608 42 | 00 | 40 | 00 | 467 00 | 177 00 |
| * | 3200 000 | 19000 00 | 608 33 | 00 | - 08 | 00 | 287 54 | 308 00 |
| * | 3300 000 | 19000 00 | 608 12 | 00 | - 21 | 00 | 235 07 | 187 00 |
| * | 3400 000 | 19000 00 | 609 31 | 00 | 1 18 | 00 | 395 16 | 167 00 |
| | 3500 000 | 19000 00 | 609 36 | 00 | 05 | 00 | 252 20 | 155 00 |
| | 3600 000 | 19000 00 | 609 37 | 00 | 01 | 00 | 168 05 | 207 00 |
| | 3700 000 | 19000 00 | 610 39 | 00 | 1 02 | 00 | 329 05 | 330 00 |
| | 3800 000 | 19000 00 | 610 91 | 00 | 52 | 00 | 430 75 | 260 00 |
| | 4000 000 | 19000 00 | 611 12 | 00 | 21 | 00 | 291 79 | 452 00 |

SUMMARY OF ERRORS AND SPECIAL NOTES

```
WARNING SECNO=    400 000  PROFILE=  1  CONVEYANCE CHANGE OUTSIDE ACCEPTABLE RANGE

CAUTION SECNO=    600 000  PROFILE=  1  CRITICAL DEPTH ASSUMED
CAUTION SECNO=    600 000  PROFILE=  1  MINIMUM SPECIFIC ENERGY

WARNING SECNO=    700 000  PROFILE=  1  CONVEYANCE CHANGE OUTSIDE ACCEPTABLE RANGE

WARNING SECNO=   1100 000  PROFILE=  1  CONVEYANCE CHANGE OUTSIDE ACCEPTABLE RANGE

WARNING SECNO=   1175 000  PROFILE=  1  CONVEYANCE CHANGE OUTSIDE ACCEPTABLE RANGE

CAUTION SECNO=   1225 000  PROFILE=  1  CRITICAL DEPTH ASSUMED
CAUTION SECNO=   1225 000  PROFILE=  1  MINIMUM SPECIFIC ENERGY

WARNING SECNO=   1250 000  PROFILE=  1  CONVEYANCE CHANGE OUTSIDE ACCEPTABLE RANGE

WARNING SECNO=   1300 000  PROFILE=  1  CONVEYANCE CHANGE OUTSIDE ACCEPTABLE RANGE

CAUTION SECNO=   1350 000  PROFILE=  1  CRITICAL DEPTH ASSUMED
CAUTION SECNO=   1350 000  PROFILE=  1  MINIMUM SPECIFIC ENERGY

CAUTION SECNO=   1400 000  PROFILE=  1  CRITICAL DEPTH ASSUMED
CAUTION SECNO=   1400 000  PROFILE=  1  MINIMUM SPECIFIC ENERGY

CAUTION SECNO=   1500 000  PROFILE=  1  CRITICAL DEPTH ASSUMED
CAUTION SECNO=   1500 000  PROFILE=  1  MINIMUM SPECIFIC ENERGY

CAUTION SECNO=   1600 000  PROFILE=  1  CRITICAL DEPTH ASSUMED
CAUTION SECNO=   1600 000  PROFILE=  1  MINIMUM SPECIFIC ENERGY

WARNING SECNO=   1700 000  PROFILE=  1  CONVEYANCE CHANGE OUTSIDE ACCEPTABLE RANGE

WARNING SECNO=   1800 000  PROFILE=  1  CONVEYANCE CHANGE OUTSIDE ACCEPTABLE RANGE

CAUTION SECNO=   2000 000  PROFILE=  1  CRITICAL DEPTH ASSUMED
CAUTION SECNO=   2000 000  PROFILE=  1  MINIMUM SPECIFIC ENERGY

CAUTION SECNO=   2100 000  PROFILE=  1  CRITICAL DEPTH ASSUMED
CAUTION SECNO=   2100 000  PROFILE=  1  MINIMUM SPECIFIC ENERGY

CAUTION SECNO=   2200 000  PROFILE=  1  CRITICAL DEPTH ASSUMED
CAUTION SECNO=   2200 000  PROFILE=  1  MINIMUM SPECIFIC ENERGY

CAUTION SECNO=   2300 000  PROFILE=  1  CRITICAL DEPTH ASSUMED
CAUTION SECNO=   2300 000  PROFILE=  1  MINIMUM SPECIFIC ENERGY

CAUTION SECNO=   2400 000  PROFILE=  1  CRITICAL DEPTH ASSUMED
CAUTION SECNO=   2400 000  PROFILE=  1  MINIMUM SPECIFIC ENERGY

WARNING SECNO=   2500 000  PROFILE=  1  CONVEYANCE CHANGE OUTSIDE ACCEPTABLE RANGE
```

```
WARNING SECNO=   2800 000  PROFILE=  1  CONVEYANCE CHANGE OUTSIDE ACCEPTABLE RANGE

WARNING SECNO=   3100 000  PROFILE=  1  CONVEYANCE CHANGE OUTSIDE ACCEPTABLE RANGE

WARNING SECNO=   3200 000  PROFILE=  1  CONVEYANCE CHANGE OUTSIDE ACCEPTABLE RANGE

WARNING SECNO=   3300 000  PROFILE=  1  CONVEYANCE CHANGE OUTSIDE ACCEPTABLE RANGE

WARNING SECNO=   3400 000  PROFILE=  1  CONVEYANCE CHANGE OUTSIDE ACCEPTABLE RANGE
```

# HARMONY GROVE VILLAGE

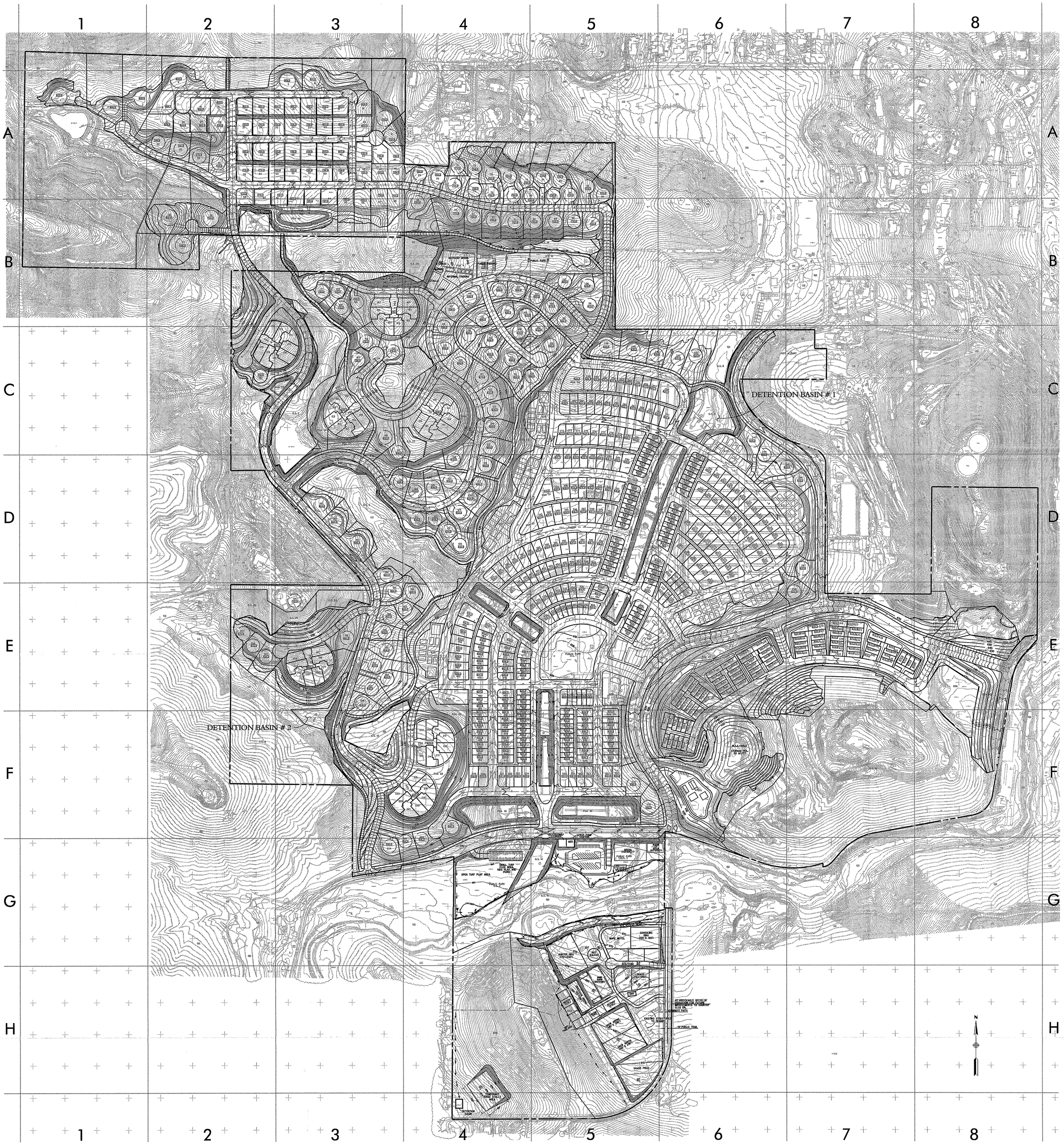


RICK ENGINEERING COMPANY
San Diego
5620 FRIARS ROAD
SAN DIEGO, CA 92110
619.291.0707
(FAX)619.291.4165
rickengineering.com
Riverside Sacramento Orange Phoenix Tucson

| NO. | REVISIONS | DATE |
|---|---|---|
| 1 | ORIGINAL | 02-03-05 |
| | | |
| | | |
| | | |

## COMPOSITE SITE PLAN

200 100 0 200 400 600
GRAPHIC SCALE 1"= 200'

m:\sj1437\composite\ha_2006site_dp.dgn
1:10"=/_feet\1435\topographic\1p1411\0\fen\ucsdcdp.pen
11/14/2005 13:18

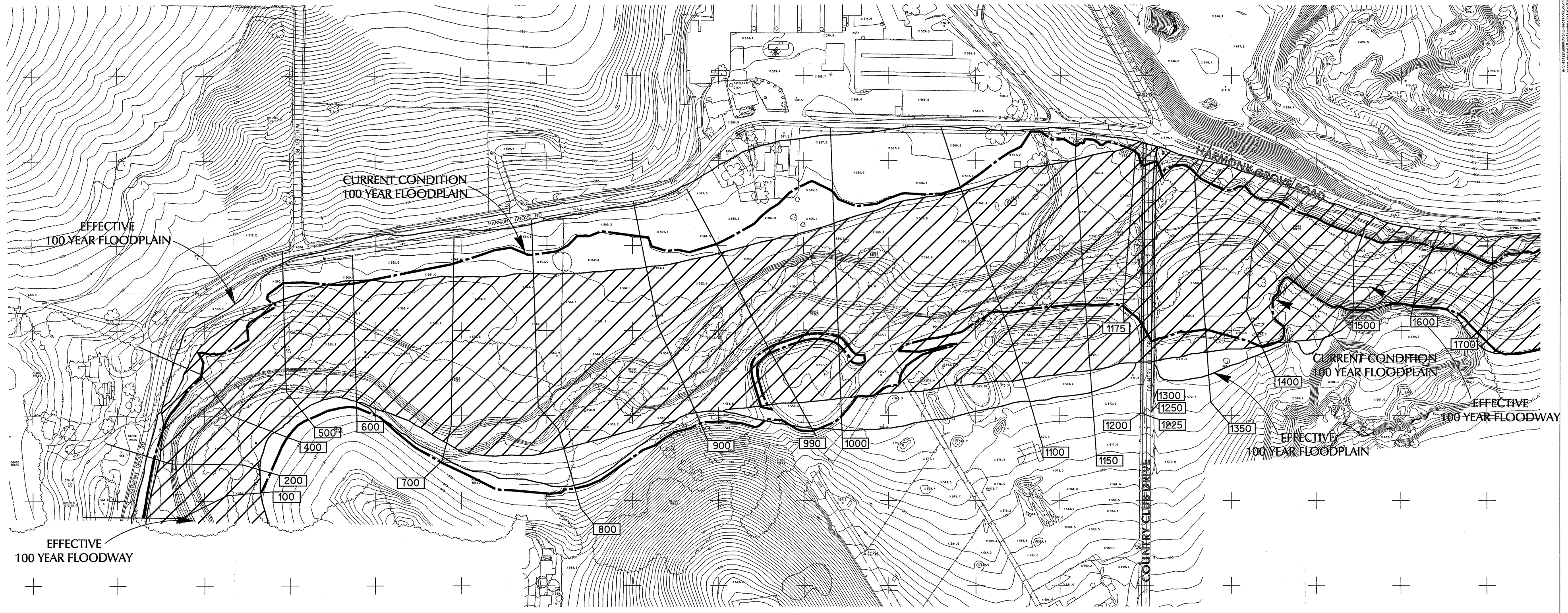


N

100 50 0 100 200 300

GRAPHIC SCALE 1"= 100'

LEGEND:

- 1000 — HEC-2 CROSS SECTION
- CURRENT CONDITION
- EFFECTIVE FLOODWAY
- EFFECTIVE FLOODPLAIN
- 222 — NODE NUMBER
- 1.6 AC — SUB-BASIN AREA
- EXIST MAJOR CONTOUR
- EXIST MINOR CONTOUR
- PROPOSED CONTOUR
- MAJOR BASIN BOUNDARY
- MINOR BASIN BOUNDARY
- PROPOSED STORM-DRAIN
- PROPOSED STORM-DRAIN STRUCTURE
- BLADED SWELLS
- 114 — PROPOSED LOT NUMBER

TOPOGRAPHY NOTES:

1. The Datum is CCS83, Zone 6 (NAD 83) 1991.35 EPOCH. Vertical Datum: USGS

# HARMONY GROVE VILLAGE

## HEC-2 ANALYSIS
## ESCONDIDO CREEK
## CURRENT CONDITIONS

**SHEET 1 of 2**

**JOB NO. 14312B** **December 19, 2005**

RICK ENGINEERING COMPANY
5620 FRIARS ROAD
SAN DIEGO, CA 92110
619.291.0707
(FAX)619.291.4165
rickengineering.com
San Diego Riverside Sacramento Orange Phoenix Tucson

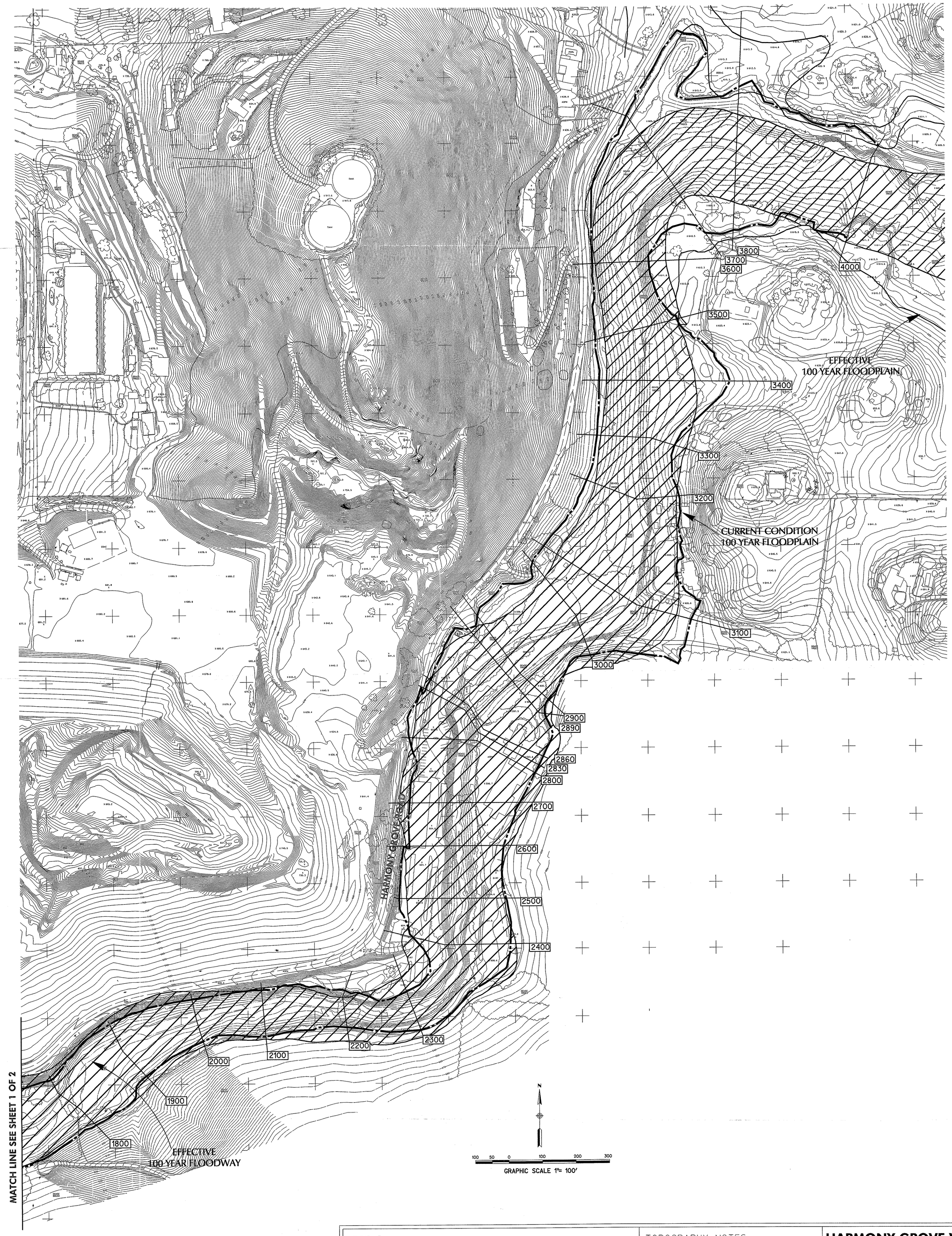


LEGEND:

- 1000 — HEC-2 CROSS SECTION
- CURRENT CONDITIONS
- EFFECTIVE FLOODPLAIN
- EFFECTIVE FLOODWAY
- 222 — NODE NUMBER
- 1.6 AC — SUB-BASIN AREA
- EXIST MAJOR CONTOUR
- EXIST MINOR CONTOUR
- PROPOSED CONTOUR
- MAJOR BASIN BOUNDARY
- MINOR BASIN BOUNDARY
- PROPOSED STORM-DRAIN
- PROPOSED STORM-DRAIN STRUCTURE
- BLADED SWELLS
- 114 — PROPOSED LOT NUMBER

TOPOGRAPHY NOTES:

The Topography for this study comes from the following source:

1. The Datum is CCS83, Zone 6 (NAD 83) 1991.35 EPOCH. Vertical Datum: USGS

# HARMONY GROVE VILLAGE

## HEC-2 ANALYSIS
## ESCONDIDO CREEK
## CURRENT CONDITIONS

**SHEET 2 of 2**

**JOB NO. 14312B** **December 19, 2005**

RICK ENGINEERING COMPANY
San Diego
5620 FRIARS ROAD
SAN DIEGO, CA 92110
619.291.0707
(FAX)619.291.4165
rickengineering.com
Riverside Sacramento Orange Phoenix Tucson

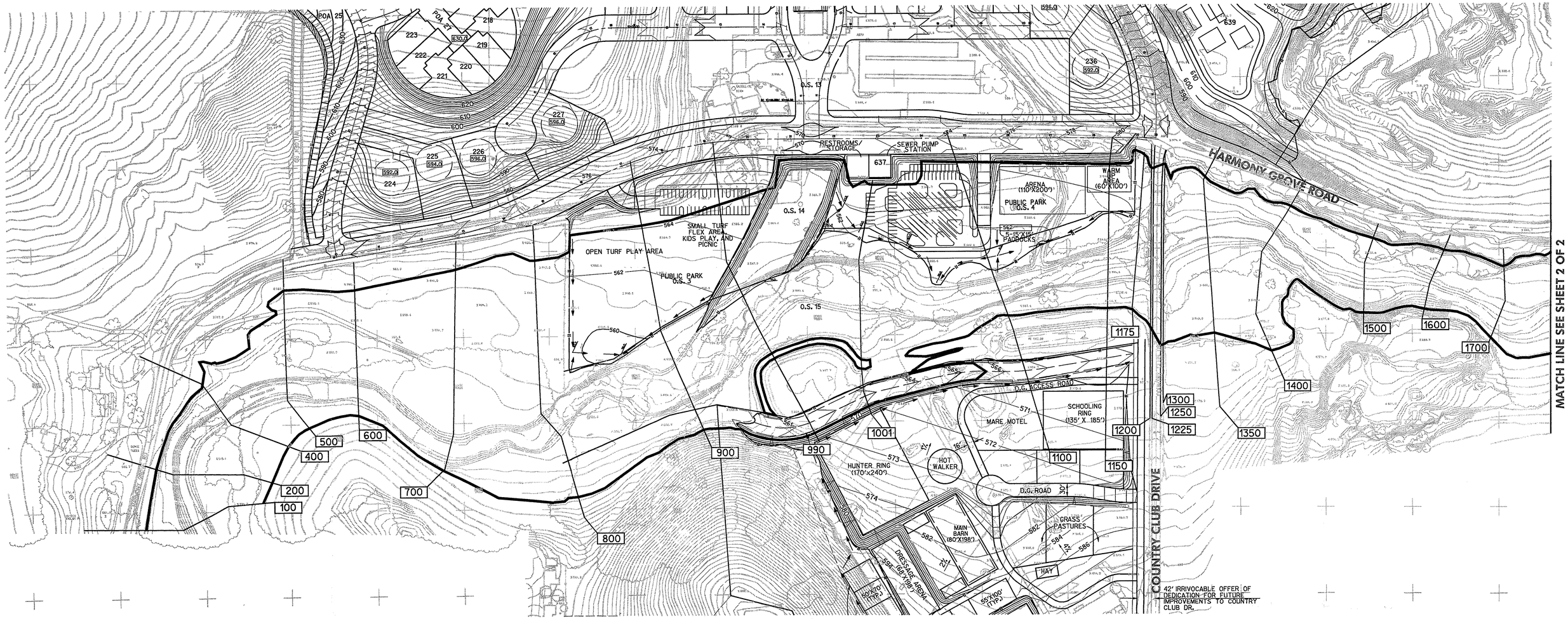


LEGEND:

1000 — HEC-2 CROSS SECTION

POST-PROJECT CONDITIONS 100 YEAR FLOODPLAIN

TOPOGRAPHY NOTES:

1. The Datum is CCS83, Zone 6 (NAD 83) 1991.35 EPOCH.
Vertical Datum: USGS

# HARMONY GROVE VILLAGE

## HEC-2 ANALYSIS
## ESCONDIDO CREEK
## POST-PROJECT CONDITIONS

**SHEET 1 of 2**

**JOB NO. 14312B** **December 19, 2005**

RICK ENGINEERING COMPANY
5620 FRIARS ROAD
SAN DIEGO, CA 92110
619.291.0707
(FAX)619.291.4165
rickengineering.com
San Diego Riverside Sacramento Orange Phoenix Tucson

LEGEND:

1000 — HEC-2 CROSS SECTION

POST-PROJECT CONDITIONS 100 YEAR FLOODPLAIN

TOPOGRAPHY NOTES:

The Topography for this study comes from the following source:

1. The Datum is CCS83, Zone 6 (NAD 83) 1991.35 EPOCH. Vertical Datum: USGS

# HARMONY GROVE VILLAGE

## HEC-2 ANALYSIS
## ESCONDIDO CREEK
## POST-PROJECT CONDITIONS

**SHEET 2 of 2**

**JOB NO. 14312B** **December 19, 2005**

RICK ENGINEERING COMPANY
5620 FRIARS ROAD
SAN DIEGO, CA 92110
619.291.0707
(FAX)619.291.4165
rickengineering.com
San Diego Riverside Sacramento Orange Phoenix Tucson

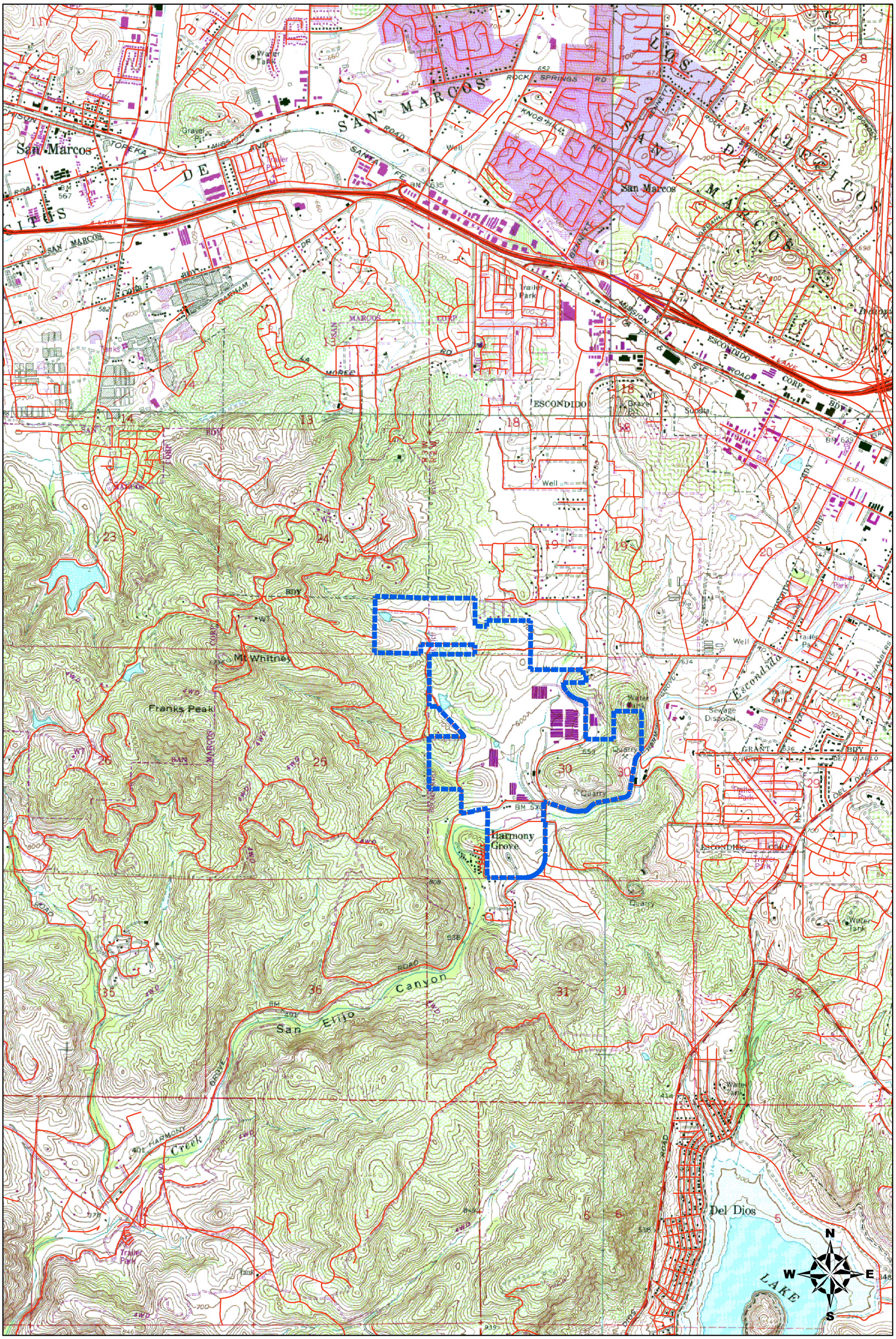


RICK ENGINEERING COMPANY

# Hamony Grove Village

## HEC-1 Workmap

0 1,000 2,000 4,000 Feet