HYDROLOGY/HYDRAULIC STUDY
for PALMA DE LA REINA
Commercial and Residential Grading Plan
Cancha De Golf, Rancho Santa Fe
L-14372

PREPARED BY:
SAN DIEGUITO ENGINEERING, INC.
4407 MANCHESTER AVENUE, SUITE 105
ENCINITAS, CA 92024

L- 14372

Log No. 03.13.001

SDE 4200.02
July 12, 2004

SDC DPLU RCVD 7-16-04

L14372

SAN DIEGUITO ENGINEERING, INC.
ENGINEERS · PLANNERS · SURVEYORS

Ivan R. Fox, P.E.
Barry L. Munson, P.E.
Gordon L. McElroy, P.L.S.
Laurie Simon, Principal Planner

CIVIL ENGINEERING
Engineering Studies
Site Development
Grading Plans
Improvement Plans
Drainage Plans
Sewer/Water Line Plans
Hydrology/Hydraulics
Construction Administration
Pavement Rehabilitation
Forensic Engineering

LAND PLANNING
Pre-Acquisition Analysis
Land Use Consultation
Environmental Analysis
Government Relations
Land Division
Tentative Maps
Major Use Permits
Specific Plans
Rezoning
Variances
Administrative Permits
Annexations
Boundary Adjustments

LAND SURVEYING
Property Surveys
Topographical Surveys
Construction Staking
Records of Survey
Legal Descriptions
Subdivision Maps
Easements
Height Certifications
Cadastral Surveys
Photogrammetric Surveys

July 13, 2004
SDE 4200.02

County of San Diego
Department of Public Works
5201 Ruffin Road
San Diego, CA 92123

Reference: Commercial and Residential Grading Plan L-14372
for Palma De La Reina
Cancha de Golf, Rancho Santa Fe

Subject: Hydrology and Hydraulic Analysis

Attention: Mr. Lee Shick

Lee;

The attached report presents our hydrology and hydraulic analysis for the referenced project. Hydrology calculations were performed using the San Diego County Hydrology Manual, dated 1993. All runoff quantities are for the 100 year storm. The hydrology calculations include calculations for Pre-development (Qpre) and Post-development (Qpost). The hydraulic calculations include design of a catch basin that separates the Qpre flow and increase in flow, Qpost minus Qpre, ie, overflow. The overflow is piped to Rainstore3™ structures, a prefabricated subsurface storage system, and eventually percolates onsite.

The Qpost is 21.84 cfs, using the Tc (time of concentration) of 6 minutes, and the appropriate runoff coefficient, C, for soil group A, 0.80. The calculated Qpre is 8.71 cfs. Utilizing a catch basin with a built in weir, the flow exiting the property is 8.43 cfs. The remaining flow is 13.41 cfs, which is directed to the Rainstore3™ structures located throughout the proposed parking lot. The H-20 loading allow placement of Rainstore3™ structures below parking spaces.

The water quality treatment is designed using the flow-based method, which is listed as an alternative to the 85th percentile runoff values as outlined in the SUSMP. The Qwq is 0.83 cfs, using rainfall intensity of 0.2 in/hour. The flow-based method was chosen since the post construction BMP used is a bioswale, an existing golf course. The Qwq, water quality runoff, flows into the proposed curb

(760) 753-5525 • FAX (760) 943-8236
4407 Manchester Avenue • Suite 105 • Encinitas, California 92024

and gutter, into the existing curb and gutter, which drops into existing curb inlets. The Qwq then flows via existing culverts to the existing golf course greens, where it is treated by the existing natural bioswale.

We have maintained the current drainage pattern for this property, utilizing existing curb inlets that discharge to existing golf course greens.

If you have any questions, please feel free to contact our office,

Sincerely,
San Dieguito Engineering, Inc.

Barry L. Munson, PE
Principal Engineer

REGISTERED PROFESSIONAL ENGINEER
BARRY L MUNSON
C-040980
Expires 3-31-07
CIVIL
STATE OF CALIFORNIA

HYDROLOGY/HYDRAULIC CALCULATIONS

COUNTY OF SAN DIEGO — FLOODPLAIN MAP

-LEGEND-

- Horizontal Control Monument *Third Order* / Vertical Control Monument *Second Order or Better*
- Horizontal Control Monument *Second Order or Better* / Vertical Control Monument *Third Order*
- Horizontal Control Monument *Second Order or Better*
- Horizontal Control Monument & Bench Mark *Second Order or Better*
- Horizontal Control Monument *Third Order*
- Horizontal Control Monument & Bench Mark *Third Order*
- Bench Mark *Second Order or Better*
- Vertical Control Monument *Third Order*
- Property Corner Found & Coordinated (California Coordinate System, Zone 6)
- 36 31 / 1 6 T 10 S T 11 S R 3 W R 2 W — Found Section, Grant or Subdivision Corner
- Photograph, Nadir Point
- Geographic Tick

BOUNDARIES IN ORDER OF PRECEDENCE
(Land Lines Shown are Approximate)

- .025" — National
- Name .025" Name — County
- .015" — City
- Name within Bdry. .016" — Reservation
- Name within Bdry. .016" — National, State or County Park
- Name within Bdry. .016" — Land Grant
- T 2 S / T 3 S .016" — Township, Range or Section

PREPARED UNDER THE DIRECTION
of
DEPARTMENT OF PUBLIC WORKS
County of San Diego

CONTROL DATA FURNISHED
by
SURVEY SECTION
Department of Public Works

HORIZONTAL CONTROL BASED
on
NORTH AMERICAN 1927 DATUM

VERTICAL CONTROL BASED
on
U.S.C. & G.S. 1929 SEA LEVEL DATUM

ORTHOPHOTO IMAGE PREPARED
from
PHOTOGRAPHY DATED: OCT. 23, 1985
by
AMERICAN AERIAL SURVEYS, INC.

TOPOGRAPHY COMPILED
by
PHOTOGRAMMETRIC METHODS
from
PHOTOGRAPHY DATED: OCT. 25, 1985
by
SAN-LO AERIAL SURVEYS

FINAL MAP PREPARED
by
MAPPING SECTION
Department of Public Works

This Map Complies with
NATIONAL MAP ACCURACY STANDARDS

200 0 200 400 600 800 1000 (Feet)
100 0 100 200 300 (Meters)

SCALE 1: 2400 (1" = 200')
INDEX CONTOUR INTERVAL: 25 FEET
CONTOUR INTERVAL: 5 FEET

TWO THOUSAND FOOT CALIFORNIA RECTANGULAR GRID (ZONE VI)
THE LAST THREE DIGITS OF THE GRID NUMBERS ARE OMITTED

THE RECTANGULAR COORDINATE VALUES ARE SHOWN ON THE SOUTH AND WEST MARGINS
THE GEOGRAPHIC VALUES ARE SHOWN ON THE NORTH AND EAST MARGINS

FLOOD PLAIN DATA

PREPARED UNDER DIRECTION OF THE DIRECTOR OF PUBLIC WORKS, COUNTY OF SAN DIEGO, CALIFORNIA

EFFECTIVE DATE: _____

BASED ON FLOOD PLAIN DATA COMPILED FROM PHOTOGRAPHY OF OCTOBER 12, 1983

FLOOD PLAIN LEGEND

- POINT OF MINIMUM ELEVATION
- CROSS SECTION END OR ANGLE POINTS
- FLOODWAY ANGLE POINTS
- 234.5 FLOODWAY ELEVATION SEA (MEAN SEA LEVEL)
- FLOODWAY LINE
- 100 YEAR FLOOD PLAIN
- EROSION/SEDIMENTATION HAZARD AREA

IN ACCORDANCE WITH THE RESOURCE PROTECTION ORDINANCE, THE INCREASE OF THE FLOODWAY WATER SURFACE ELEVATION OVER THAT OF THE 100-YEAR FLOOD IS NO MORE THAN 0.2 OF ONE FOOT.

302-1695	302-1701	302-1707
298-1695	298-1701	298-1707
294-1695	294-1701	294-1707

SAN DIEGUITO RIVER
SHEET 1 OF 13
PROJECT 3152

SAN DIEGO COUNTY
CALIFORNIA

SHEET NO.
298-1701

COUNTY OF SAN DIEGO — TOPOGRAPHIC SURVEY

-LEGEND-

- Horizontal Control Monument *Third Order*
- Vertical Control Monument *Second Order or Better*
- Horizontal Control Monument *Second Order or Better*
- Vertical Control Monument *Third Order*
- Horizontal Control Monument *Second Order or Better*
- Horizontal Control Monument & Bench Mark *Second Order or Better*
- Horizontal Control Monument *Third Order*
- Horizontal Control Monument & Bench Mark *Third Order*
- Bench Mark *Second Order or Better*
- Vertical Control Monument *Third Order*
- Property Corner Found & Coordinated (California Coordinate System, Zone 6)
- 36 31 / 1 6 T 19 S / T 18 S R 2 W / R 1 W — Found Section, Grant or Subdivision Corner
- Photograph, Nadir Point
- Geographic Tick

BOUNDARIES IN ORDER OF PRECEDENCE
(Land Lines Shown are Approximate)

- .025" — National
- Name .025" Name — County
- .015" — City
- Name within Bdry. .015" — Reservation
- Name within Bdry. .015" — National, State or County Park
- Name within Bdry. .015" — Land Grant
- T2S T3S .015" — Township, Range or Section

PREPARED UNDER THE DIRECTION
of
DEPARTMENT OF PUBLIC WORKS
County of San Diego

CONTROL DATA FURNISHED
by
SURVEY SECTION
Department of Public Works

HORIZONTAL CONTROL BASED
on
NORTH AMERICAN 1927 DATUM

VERTICAL CONTROL BASED
on
U.S.C. & G.S. 1929 SEA LEVEL DATUM

ORTHOPHOTO IMAGE PREPARED
from
PHOTOGRAPHY DATED: OCTOBER 23, 1985
by
AMERICAN AERIAL SURVEYS, INC.

TOPOGRAPHY COMPILED
by
PHOTOGRAMMETRIC METHODS
from
PHOTOGRAPHY DATED: OCTOBER 25, 1985
by
SAN-LO AERIAL SURVEYS

FINAL MAP PREPARED
by
MAPPING SECTION
Department of Public Works

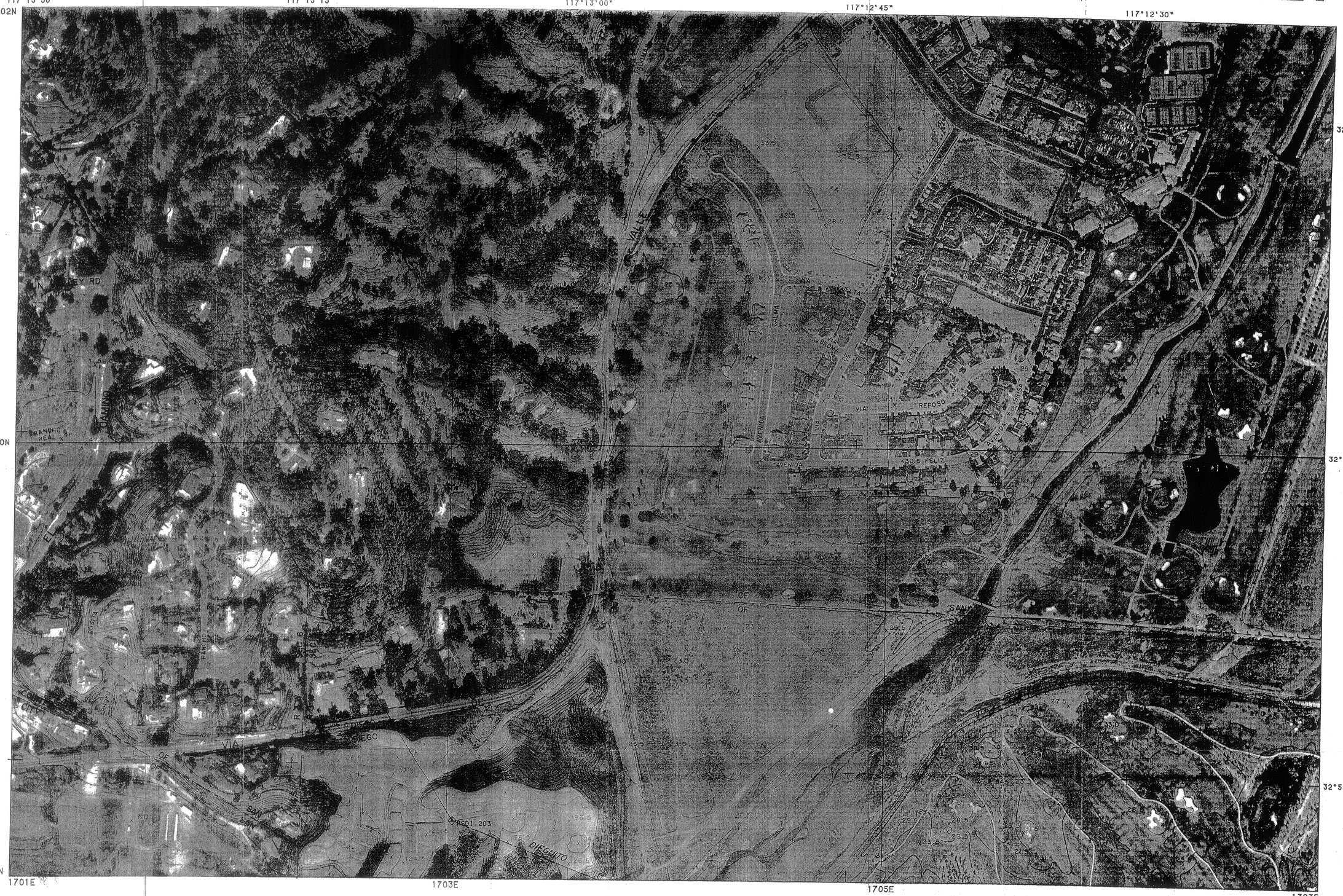

This Map Complies with
NATIONAL MAP ACCURACY STANDARDS

200 0 200 400 600 800 1000 (Feet)
100 0 100 200 300 (Meters)

SCALE 1: 2400 (1" = 200')

INDEX CONTOUR INTERVAL: 25 FEET
CONTOUR INTERVAL: 5 FEET

TWO THOUSAND FOOT CALIFORNIA RECTANGULAR GRID (ZONE VI)
THE LAST THREE DIGITS OF THE GRID NUMBERS ARE OMITTED

THE RECTANGULAR COORDINATE VALUES ARE SHOWN ON THE SOUTH AND WEST MARGINS
THE GEOGRAPHIC VALUES ARE SHOWN ON THE NORTH AND EAST MARGINS

INDEX TO ADJOINING SHEETS

302-1695	302-1701	302-1707
298-1695	298-1701	298-1707
294-1695	294-1701	294-1707

SAN DIEGO COUNTY
CALIFORNIA

SHEET NO. 298-1701

STORM DRAIN PIPE TO RAINSTORE3™

	L [FT]	SLOPE [FT/FT]	IE1	IE2	PVC PIPE SIZE
F1	49.6	0.0200	31.91	30.92	6" SDR-35
F2	84.1	0.0200	30.98	29.30	6" SDR-35
F3	63.9	0.0376	29.30	31.70	4" SDR-35
F4	61.9	0.0141	28.43	29.30	4" SDR-35

	L [FT]	SLOPE [FT/FT]	IE1	IE2	PVC PIPE SIZE
G	104.0	0.0281	32.46	29.54	4" SDR-35
H	84.2	0.0227	32.42	30.51	4" SDR-35
J	137.0	0.0297	32.93	28.86	6" SDR-35
K	79.8	0.0382	31.91	28.86	6" SDR-35
L	65.2	0.0454	31.82	28.86	6" SDR-35

STORM DRAIN PIPE TO FACE OF CURB

	L [FT]	SLOPE [FT/FT]	IE1	IE2	PVC PIPE SIZE
6	38.1	0.0126	32.46	31.98	4" SDR-35
7A	66.5	0.0101	33.09	32.42	4" SDR-35
7B	52.6	0.0103	32.96	32.42	4" SDR-35
7C	101.8	0.0094	32.42	31.46	4" SDR-35

	L [FT]	SLOPE [FT/FT]	IE1	IE2	PVC PIPE SIZE
8	129.7	0.0113	32.93	31.46	4" SDR-35
9	65.3	0.0069	31.91	31.46	4" SDR-35
10	50.8	0.0071	31.82	31.46	4" SDR-35

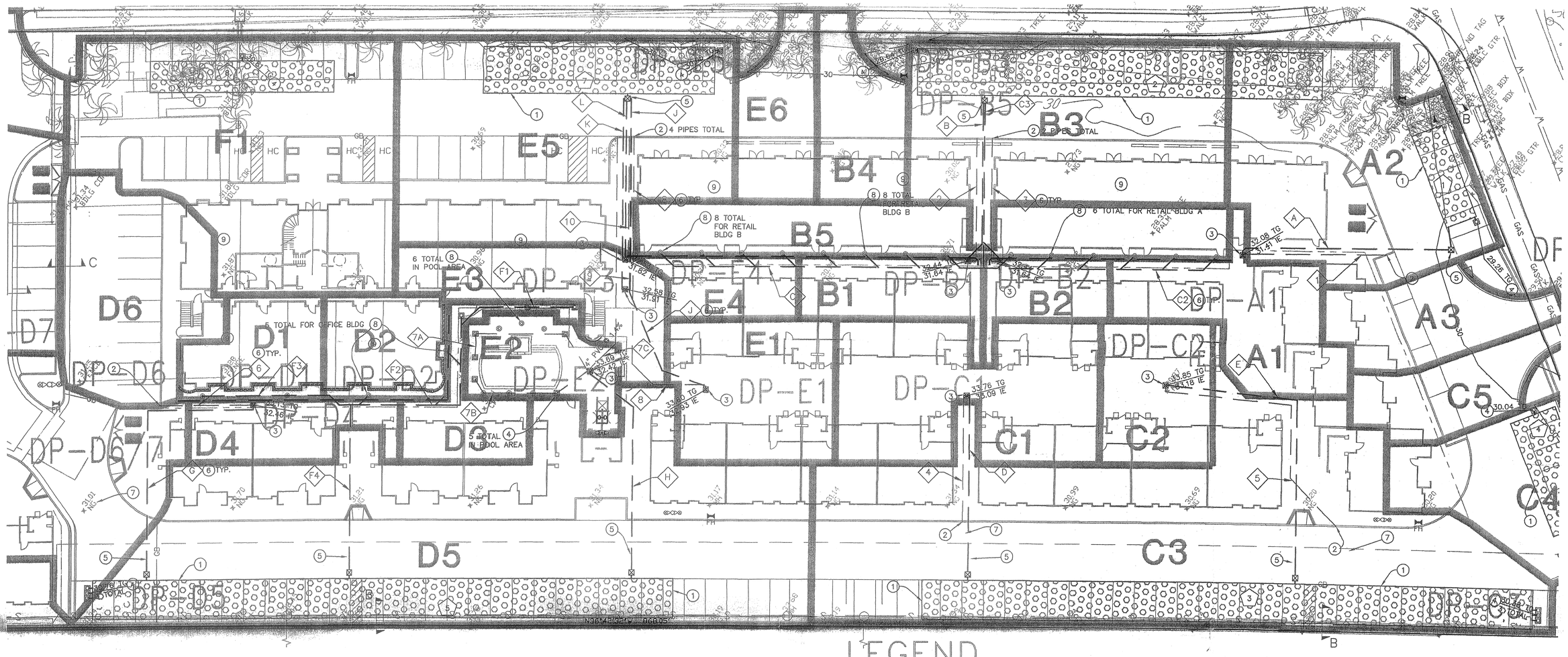

PIPE DESIGNATION

LEGEND

DP-C4	DESIGN POINT OF CONCENTRATION
D4	WATERSHED BASIN AREA
	PROPOSED INFILTRATION BASINS
	PROPOSED DRAINAGE STRUCTURES
6	SEE CONSTRUCTION NOTES ON L-14372

SCALE 1" = 20'

SAN DIEGUITO ENGINEERING, INC.
4407 MANCHESTER, SUITE 105
ENCINITAS, CA 92024
PHONE: (760) 753-5525
CIVIL ENGINEERING - PLANNING
LAND SURVEYING

U:1DATA\ENGINEERING\4200.02\DWG\4200_02HYDRO_MAP.DWG, SCALE:1"=20', DATE: 7-9-04

ENGINEER'S NAME: SAN DIEGUITO ENGINEERING
PHONE NO. (760) 753-5525

FILE NO.4200.02

Del Mar

San Diego County, California

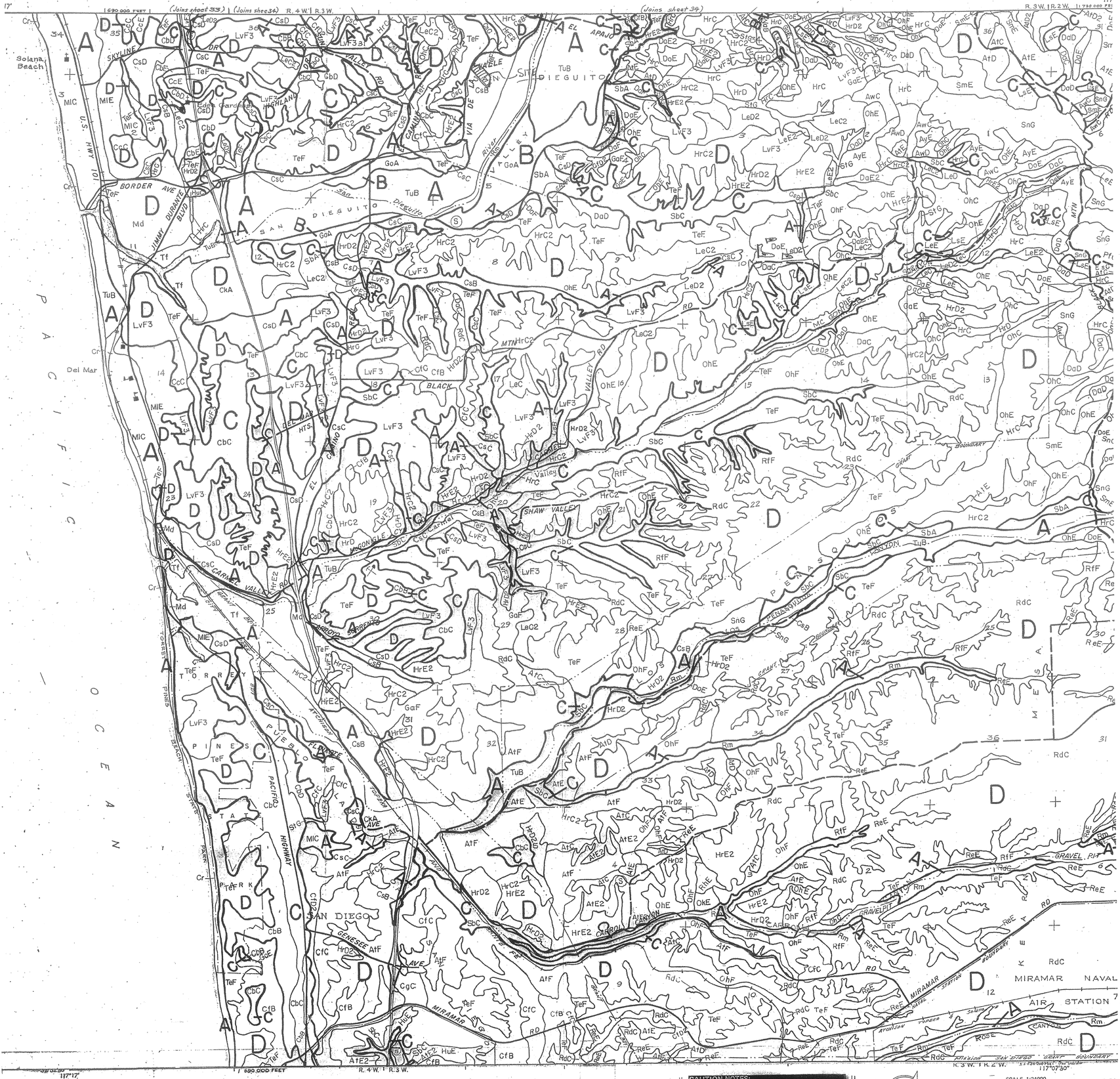

San Diego County Soils Interpretation Study

HYDROLOGIC SOIL GROUPS - Runoff Potential

SEE CAUTION NOTES

Group A	Group B	Group C	Group D
A Low Runoff Potential	B Moderate Runoff Potential	C High Runoff Potential	D Very High Runoff Potential

CAUTION NOTES:

1. User is urged to refer to corresponding SUPPLEMENTAL DATA SHEET for assumptions, criteria, map sources, additional legend items, and necessary explanation of ratings shown on map.

2. This map does not eliminate the need for detailed on-site investigation of the soil and site to determine precise soil conditions prior to undertaking any construction, grading, planting, or other soils related activity.

Base Map Source: U. S. Geological Survey with California State Coordinate System, Zone 6 Indicated

Prepared by: U. S. Department of Agriculture, Soil Conservation Service

Published by: San Diego County Planning Department for the Comprehensive Planning Organization — 1969

North

SCALE-1:24000

0 2000 4000 6000 feet

0 ¼ mile ½ mile 1 mile

Represents 40 acres

FEDERAL ASSISTANCE — The preparation of this map was financed in part through a comprehensive planning grant from the Department of Housing and Urban Development.

SHEET NAME: Del Mar

SHEET NUMBER: 43

RUNOFF POTENTIAL

MAP NO. 43

HYDRO MAP - PRE DEVELOPMENT

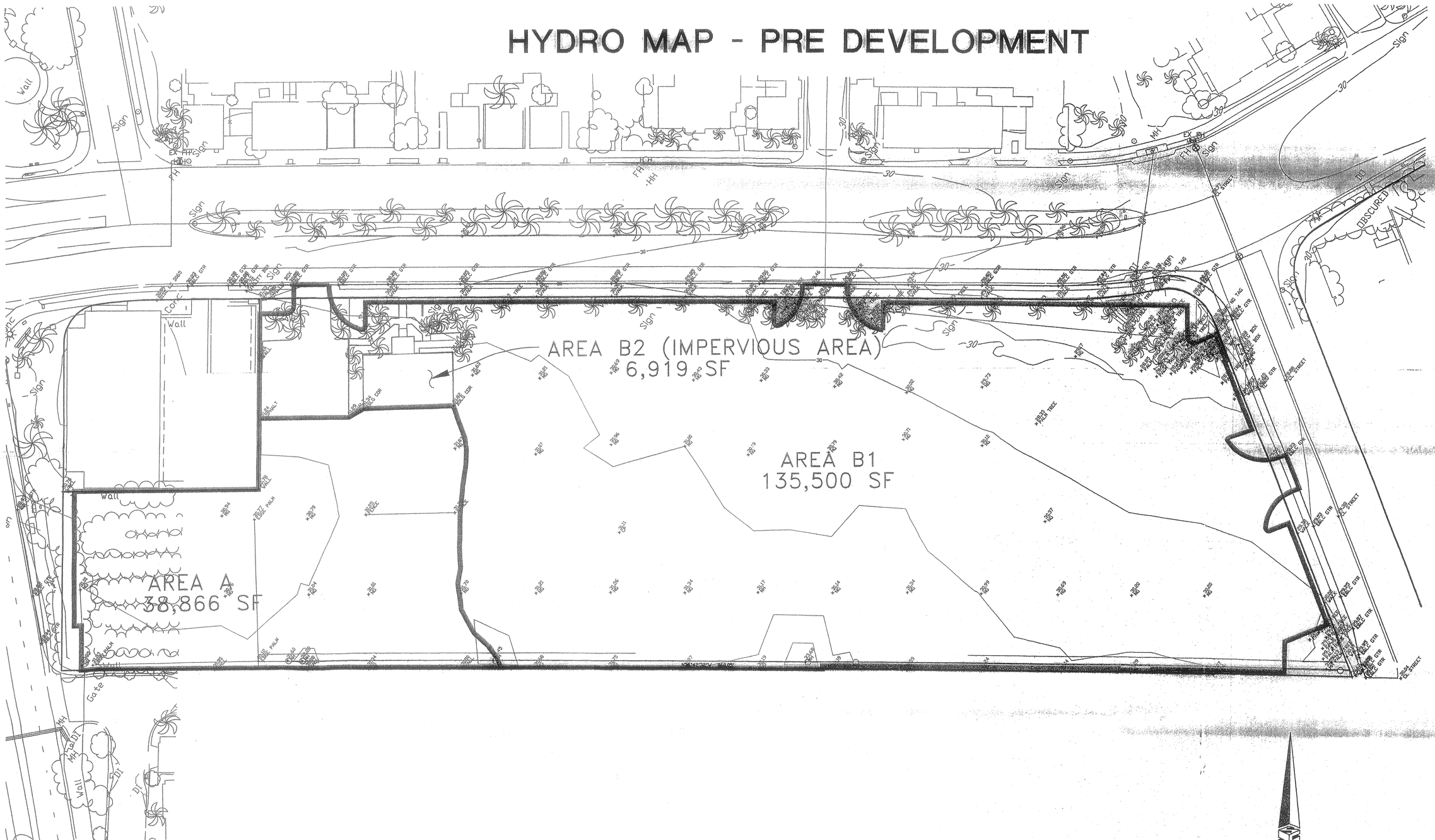

SAN DIEGUITO ENGINEERING, INC
4407 MANCHESTER, SUITE 105
ENCINITAS, CA 92024
PHONE: (760) 753-5525
CIVIL ENGINEERING • PLANNING
LAND SURVEYING

ENGINEER'S NAME: SAN DIEGUITO ENGINEERING
PHONE NO. (760) 753-5525

I:\DATA\ENGINEERING\4200.02\DWG\4200_02HYDRO_MAP.DWG, SCALE:1"=30', DATE:1-8-02

FILE NO.4200.02

HYDRO MAP - POST DEVELOPMENT

EXISTING DRAINAGE STRUCTURE

DP-F1 Q100=0.88 cfs V100=3.07 fps

Q100=0.29 cfs V100=3.08 fps

Q100=0.92 cfs V100=3.26 fps

Q100=0.24 cfs V100=2.31 fps

Q100=1.44 cfs V100=5.23 fps

DP-A2 Q100=0.82 cfs V100=1.92 fps

Q100=0.35 cfs V100=2.41 fps

Q100=0.29 cfs V100=2.82 fps

DP-C4 Q100=1.15 cfs V100=4.78 fps

Q100=1.10 cfs V100=3.90 fps

Q100=0.64 cfs V100=1.80 fps

EX. TYPE K CATCH BASIN

EX. TYPE K CATCH BASIN

EX. SD CLEANOUT D-9

EXISTING DRAINAGE STRUCTURE

EX. 24" CMP

EX. TYPE B INLET PER D-2

LEGEND

	DIRECTION OF FLOW
DP-C4	DESIGN POINT OF CONCENTRATION
D4	WATERSHED BASIN AREA
	PROPOSED INFILTRATION BASINS
	PROPOSED DRAINAGE STRUCTURES

SCALE 1" = 30'

SAN DIEGUITO ENGINEERING, INC

4407 MANCHESTER, SUITE 105
ENCINITAS, CA 92024
PHONE: (760) 753-5525

CIVIL ENGINEERING • PLANNING
LAND SURVEYING

ENGINEER'S NAME: SAN DIEGUITO ENGINEERING
PHONE NO. (760) 753-5525

FILE NO.4200.02

U:1DATA\ENGINEERING\4200.02\DWG\4200_02HYDRO_MAP.DWG, SCALE:1"=30', DATE: 7-9-04

PALMA DE LA REINA

INLET FLOODING EXHIBIT

100% PLUGGED

(Purpose: to show F.F.'s are all protected in event inlets plug)

See Basin Map for "Design" Flows

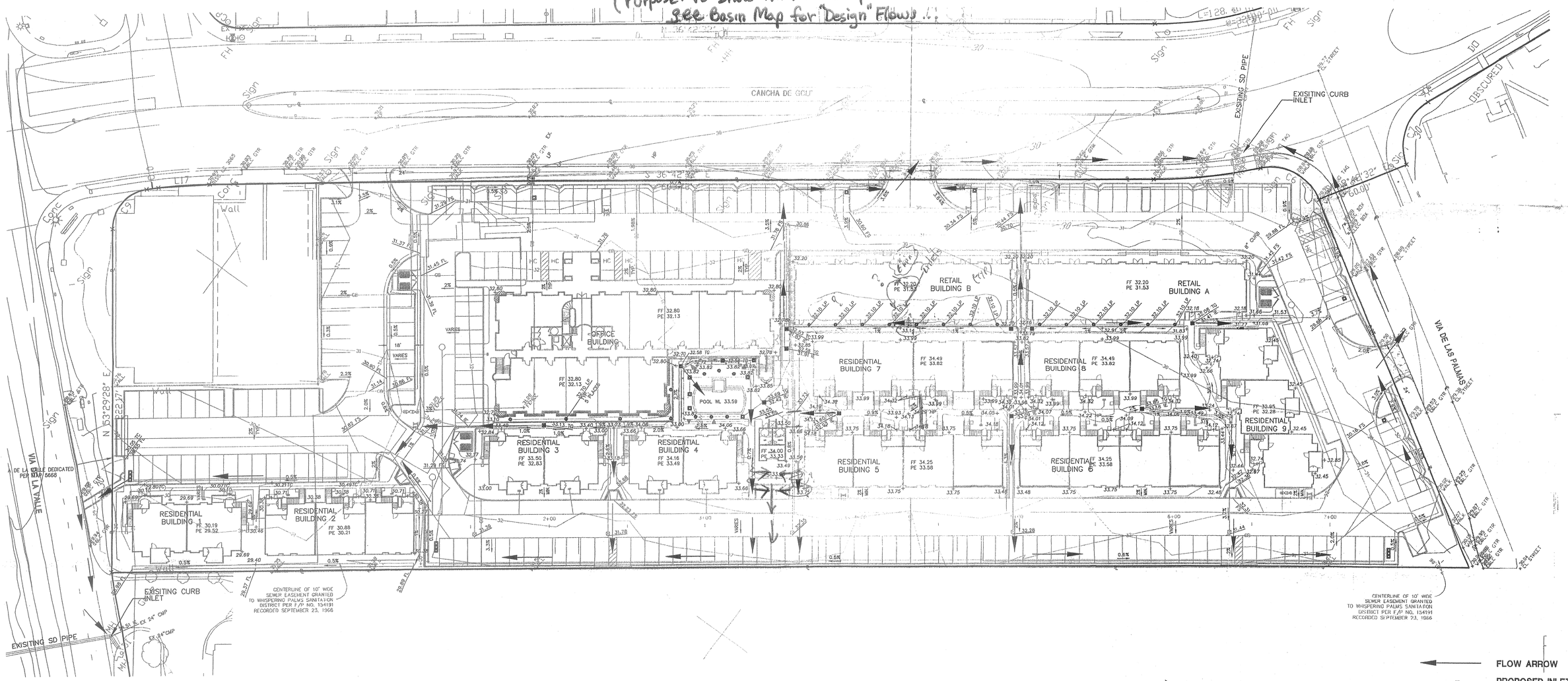

NOTE:
THIS IS NOT FOR FINAL DESIGN. THIS IS PROVIDED AS AN ILLUSTRATION OF WHERE WATER WILL FLOW IF ALL GRATES ARE CLOGGED.

PIPE DESIGNATION

SAN DIEGUITO ENGINEERING, INC
4407 MANCHESTER, SUITE 105
ENCINITAS, CA 92024
PHONE: (760) 753-5525
CIVIL ENGINEERING • PLANNING
LAND SURVEYING

ENGINEER'S NAME: SAN DIEGUITO ENGINEERING
PHONE NO. (760) 753-5525

U:\1DATA\ENGINEERING\4200.02\DWG\4200_PLUGGED-GRATE.DWG, SCALE 1"=30', DATE:07-12-04

FILE NO.4200.02

HYDROLOGY SUMMARY

PROJECT NAME: NEWPORT PACIFIC
PROJECT NUMBER: 4200.02
COMMENT: PALMA DE LA REINA PROJECT

COORD:

100 YEAR STORM

P6 (in):	2.80	P6/P24:	0.62
P24 (in):	4.50	ADJUSTED P6:	2.80

SOIL GROUP: A
RUNOFF COEFFICIENT:
0.80 Industrial Urban Area

WATERSI DESIGNA	AREA (sf)	AREA (Ac)	C	Tc used (min)	I (iph)	Qpost Total (cfs)	Qpre Total (cfs)	Comments	Qwq Total (cfs)
A	38866	0.89	0.30	6.0	6.56		1.76	See Hydro Map for	
B1	135500	3.11	0.30	6.0	6.56		6.12	Pre-Development	
B2	6919.00	0.16	0.80	6.0	6.56		0.83	Drainage Basins	
					Total for B1+B2		6.95		
A1	4035	0.09	0.80	6.0	6.56	0.49		See Sub-Basin Calculations	0.02
A2	8879	0.20	0.80	6.0	6.56	1.07		(ie, DP-A1 for A1)	0.04
A3	2932	0.07	0.80	6.0	6.56	0.35			0.01
B1	2170	0.05	0.80	6.0	6.56	0.26			0.01
B2	1510	0.03	0.80	6.0	6.56	0.18			0.01
B3	9385	0.22	0.80	6.0	6.56	1.13			0.04
B4	2526	0.06	0.80	6.0	6.56	0.30			0.01
B5	5434	0.12	0.80	6.0	6.56	0.65		Directly to Rainstore 3 CB	0.02
C1	6298	0.14	0.80	6.0	6.56	0.76			0.03
C2	2908	0.07	0.80	6.0	6.56	0.35			0.01
C3	21287	0.49	0.80	6.0	6.56	2.56			0.10
C4	4252	0.10	0.80	6.0	6.56	0.51			0.02
C5	2448	0.06	0.80	6.0	6.56	0.29			0.01
D1	2290	0.05	0.80	6.0	6.56	0.28		Directly to Rainstore 3 CB	0.01
D2	2335	0.05	0.80	6.0	6.56	0.28		Directly to Rainstore 3 CB	0.01
D3	2055	0.05	0.80	6.0	6.56	0.25		Directly to Rainstore 3 CB	0.01
D4	2049	0.05	0.80	6.0	6.56	0.25			0.01
D5	21385	0.49	0.80	6.0	6.56	2.58			0.10
D6	5372	0.12	0.80	6.0	6.56	0.65			0.02
D7	6453	0.15	0.80	6.0	6.56	0.78			0.03
D8	20377	0.47	0.80	6.0	6.56	2.45			0.09
E1	4198	0.10	0.80	6.0	6.56	0.51			0.02
E2	2252	0.05	0.80	6.0	6.56	0.27			0.01
E3	3528	0.08	0.80	6.0	6.56	0.42			0.02
E4	1573	0.04	0.80	6.0	6.56	0.19			0.01
E5	11593	0.27	0.80	6.0	6.56	1.40			0.05
E6	2370	0.05	0.80	6.0	6.56	0.29			0.01
F1	12130	0.28	0.80	6.0	6.56	1.46			0.06
F2	1992	0.05	0.80	6.0	6.56	0.24			0.01
G1	5300	0.12	0.80	6.0	6.56	0.64			0.02
	181316				Q_{100} total	21.84	8.71	Qwq=	0.83 cfs

NOTES:

<1> Tc calculated per Urban Areas Overland Time of Flow Curves, Appendix X-C of 1993 Edition of County of San Diego Hydrology Manual, Tc used is 6 minutes minimum required per Hydrology Manual.
<2> For Qpre Calculations, C=0.30 per Appendix IX of 1993 Edition of County of San diego Hydrology Manual.
<3> Qwq represent flow to be treated based the maximum flow rate of runoff produced from a rainfall intensity of 0.2"/hour. Therefore, Q=CIA, where C=1.0, I=0.2 and A=area of watershed in acres

RUNOFF COEFFICIENTS (RATIONAL METHOD)

DEVELOPED AREAS (URBAN)

Land Use	Coefficient, C Soil Group [1] A	B	C	D
Residential:				
Single Family	.40	.45	.50	.55
Multi-Units	.45	.50	.60	.70
Mobile Homes	.45	.50	.55	.65
Rural (lots greater than 1/2 acre)	.30	.35	.40	.45
Commercial [2]				
80% Impervious	.70	.75	.80	.85
Industrial [2] 90% Impervious	.80	.85	.90	.95

NOTES:

[1] Soil Group maps are available at the offices of the Department of Public Works.

[2] Where actual conditions deviate significantly from the tabulated imperviousness values of 80% or 90%, the values given for coefficient C, may be revised by multiplying 80% or 90% by the ratio of actual imperviousness to the tabulated imperviousness. However, in no case shall the final coefficient be less than 0.50. For example: Consider commercial property on D soil group.

Actual imperviousness = 50%

Tabulated imperviousness = 80%

$$\text{Revised } C = \frac{50}{80} \times 0.85 = 0.53$$

COMMERCIAL SITE PLAN

SHEET 1 OF 2

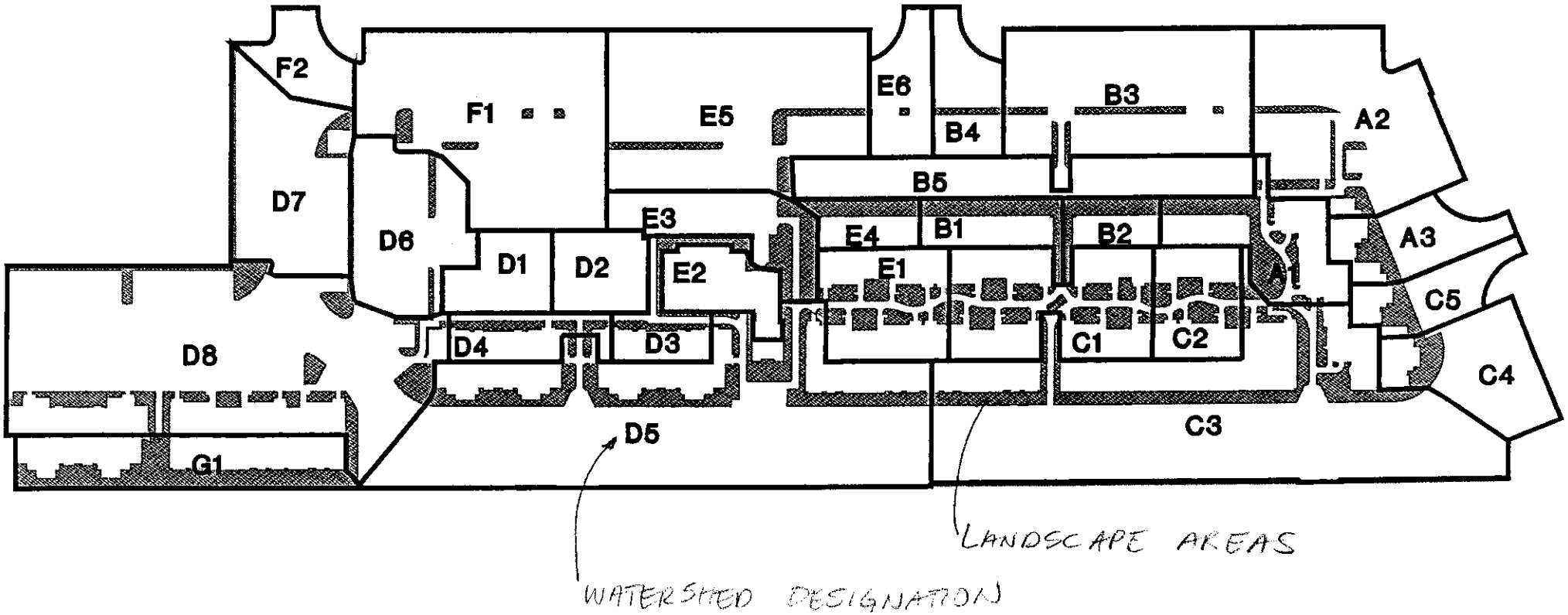

TOTAL SQ. FT. OF LANDSCAPE AREAS. SEE SHEET 2 OF 2

COMMERCIAL SITE PLAN

SHEET 2 OF 2

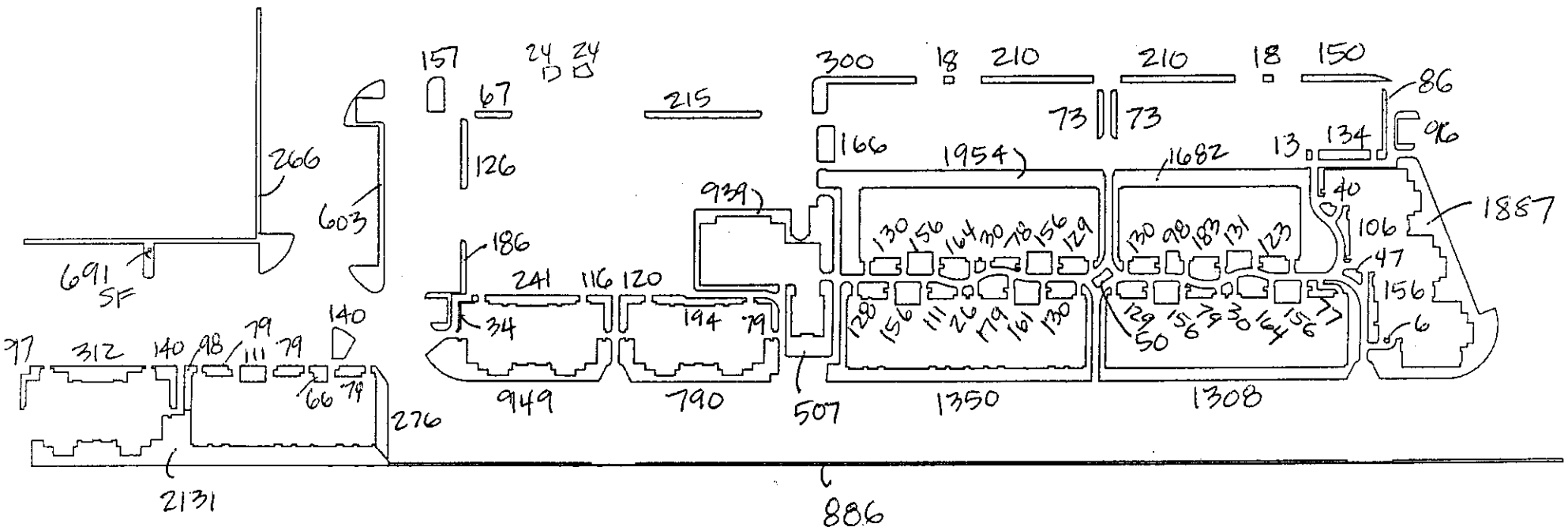

TOTAL LANDSCAPE AREA = 24,145 SF

TOTAL AREA OF HYDROLOGY BASINS = 181,316 SF

TOTAL IMPERVIOUS AREA = 157,171

% IMPERVIOUS = $\frac{157,171}{181,316}$ = 0.8668 = 86.7%

SOILS MAP

(Joins sheet 34, Rancho Santa Fe quadrangle)

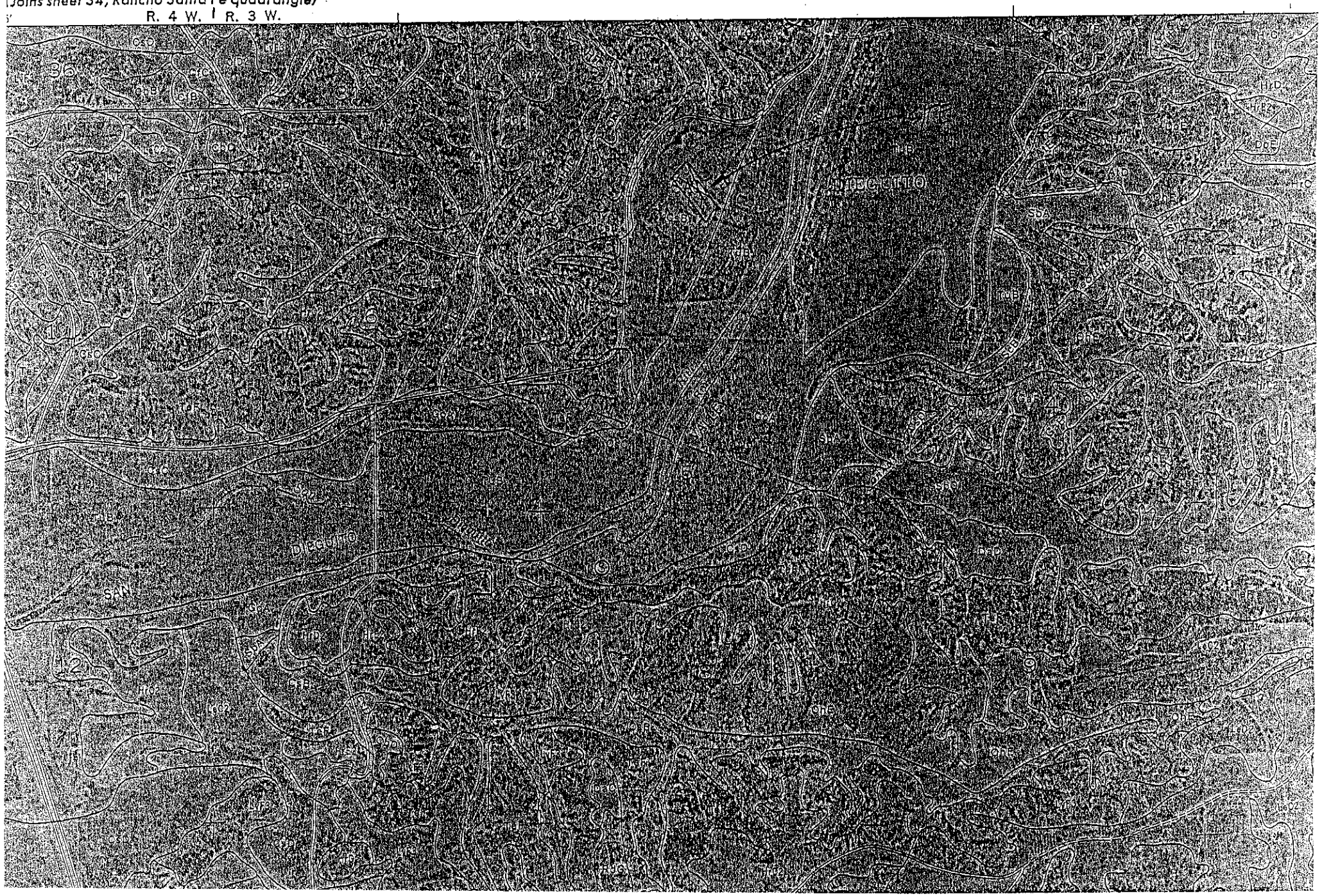

TABLE - 15

INTERPRETATIONS FOR LAND MANAGEMENT

KEY TO INTERPRETATION RATING SYMBOLS:

HYDROLOGIC SOIL GROUPS:

- *A - HIGH INFILTRATION RATE*
- *B - MODERATE INFILTRATION RATE*
- *C - SLOW INFILTRATION RATE*
- *D - VERY SLOW INFILTRATION RATE*

LIMITATIONS:

- *SL - SLIGHT DEGREE OF LIMITATION*
- *M - MODERATE DEGREE OF LIMITATION*
- *SE - SEVERE DEGREE OF LIMITATION*

Soil Map Symbol[a]	Interpretation Rating[b]		
	Hydrologic Group	Erodibility by Water	Conversion from Brush to Grass
(1)	(2)	(3)	(4)
CmrG	B	SE (slp)	SE
CnE2 [c]			
(Cl)	B	SE (str)	SE
(Fa)	C	SE (str)	SE
CnG2 [c]			
(Cl)	B	SE (slp)	SE
(Fa)	C	SE (slp)	SE
Co	D	M (txt)	SL
Cr	A	SE (txt)	
CsB	A	SE (txt)	SL
CsC	A	SE (txt)	SL
CsD	A	SE (txt)	SL
CtE	B	SE (str)	SL
CtF	B	SE (slp)	M
CuE	B	SE (str)	M
CuG	B	SE (slp)	M
CvG	B	SE (slp)	M
DaC	D	SL	SL [d]
DaD	D	SL	SL [d]
DaE	D	M (slp)	SL [d]
DaE2	D	M (slp)	SL [d]
DaF	D	SE (slp)	M [d]
DcD [c]			
(Da)	D		
(Ur)	D		
DcF [c]			
(Da)	D		
(Ur)	D		
DoE [c]			
(Da)	D	M (slp)	SL
(Oh)	D	M (slp)	SE
EdC	B	M (txt)	SL
EsC	C	SE (str)	SL
EsD2	C	SE (str)	SL
EsE2	C	SE (str)	SL
EvC	C	SE (str)	SL
ExE	D	SE (dpt)	SE
ExG	D	SE (slp)	SE
FaB	C	SE (str)	SL

Soil Map Symbol[a]	Interpretation Rating[b]		
	Hydrologic Group	Erodibility by Water	Conversion from Brush to Grass
(1)	(2)	(3)	(4)
FaC	C	SE (str)	SL
FaC2	C	SE (str)	SL
FaD2	C	SE (str)	SL
FaE2	C	SE (str)	SL
FaE3	C	SE (str)	SE
FeC	C	SE (str)	SL
FeE	C	SE (str)	M
FeE2	C	SE (str)	M
FvD [c]			
(Fa)	C	SE (str)	SL
(Vs)	B	SE (str)	M
FvE [c]			
(Fa)	C	SE (str)	SL
(Vs)	B	SE (str)	M
FwF	D	SE (dpt)	SE
FxE	D	SE (dpt)	SE
FxG	D	SE (slp)	SE
GaE	D	SE (dpt)	SE
GaF	D	SE (slp)	SE
GoA	B	SE (str)	SL
GrA	B	SE (str)	SL
GrB	B	SE (str)	SL
GrC	B	SE (str)	SL
GrD	B	SE (str)	SL
HaG	D	SE (slp)	M
HmD	C	SE (str)	SL
HmE	C	SE (str)	SL
HnE	C	SE (str)	M
HnG	C	SE (slp)	M
HoC	C	SE (str)	SL
HrC	D	SE (dpt)	SL
HrC2	D	SE (dpt)	SL
HrD	D	SE (dpt)	SL
HrD2	D	SE (dpt)	SL
HrE2	D	SE (dpt)	SL
HuC [c]			
(Hr)	D		
(Ur)	D		
HuE [c]			
(Hr)	D		
(Ur)	D		

INTENSITY-DURATION DESIGN CHART

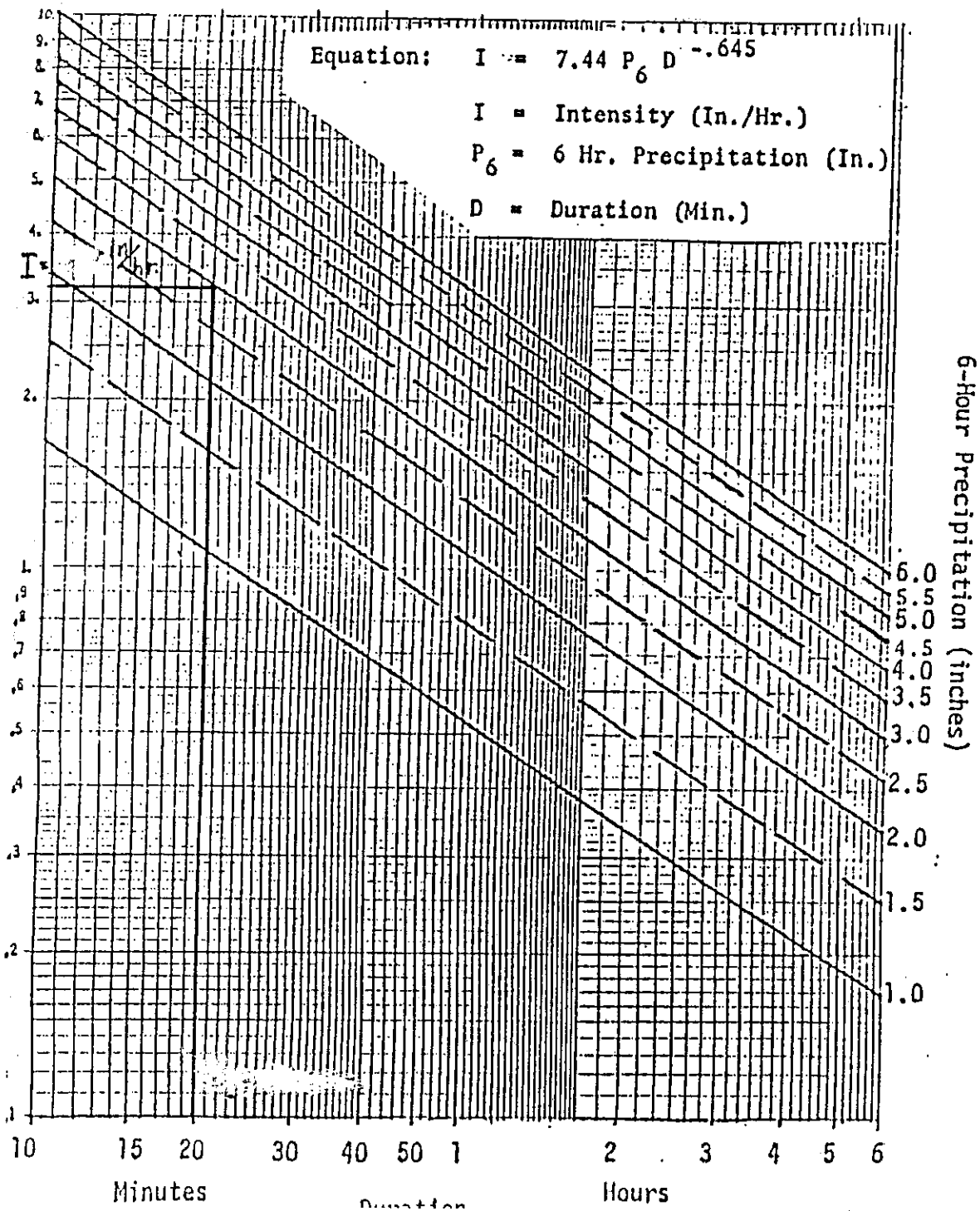

Directions for Application:

1) From precipitation maps determine 6 hr. and 24 hr. amounts for the selected frequency. These maps are printed in the County Hydrology Manual (10, 50 and 100 yr. maps included in the Design and Procedure Manual).

2) Adjust 6 hr. precipitation (if necessary) so that it is within the range of 45% to 65% of the 24 hr. precipitation. (Not applicable to Desert)

3) Plot 6 hr. precipitation on the right side of the chart.

4) Draw a line through the point parallel to the plotted lines.

5) This line is the intensity-duration curve for the location being analyzed.

Application Form:

0) Selected Frequency 100 yr.

1) P_6 = 2.8 in., P_{24} = 4.5, $\frac{{}^{*}P_6}{P_{24}}$ = 62.2%*

2) Adjusted $^{*}P_6$ = 2.8 in.

3) t_c = 6 min.

4) I = 6.56 in/hr.

*Not Applicable to Desert Region

COUNTY OF SAN DIEGO
DEPARTMENT OF SANITATION &
FLOOD CONTROL

100-YEAR 6-HOUR PRECIPITATION

~20~ ISOPLUVIALS OF 100-YEAR 6-HOUR PRECIPITATION IN TENTHS OF AN INCH

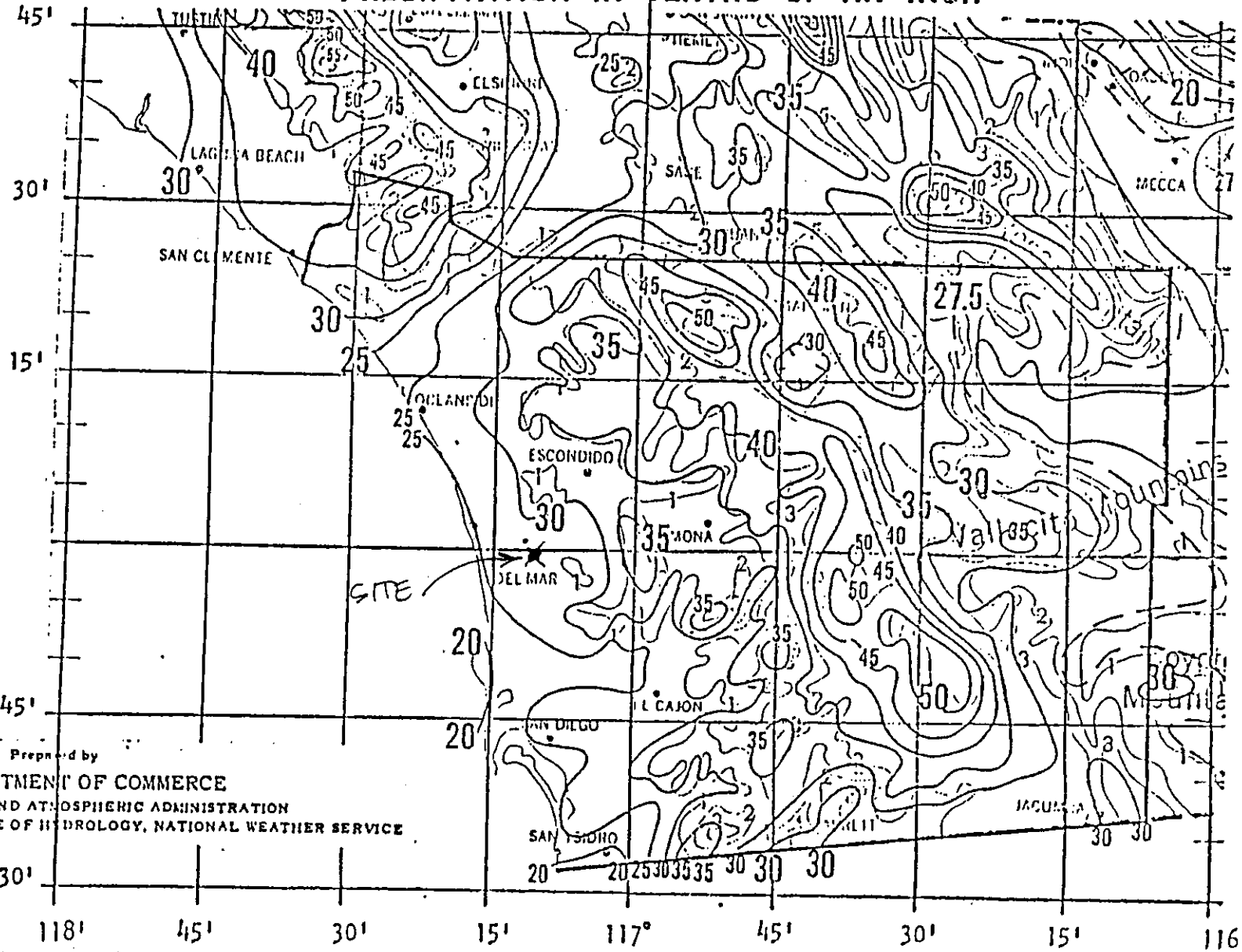

Prepared by
U.S. DEPARTMENT OF COMMERCE
NATIONAL OCEANIC AND ATMOSPHERIC ADMINISTRATION
SPECIAL STUDIES BRANCH, OFFICE OF HYDROLOGY, NATIONAL WEATHER SERVICE

COUNTY OF SAN DIEGO
DEPARTMENT OF SANITATION &
FLOOD CONTROL

100-YEAR 24-HOUR PRECIPITATION

ISOPLUVIALS OF 100-YEAR 24-HOUR PRECIPITATION IN TENTHS OF AN INCH

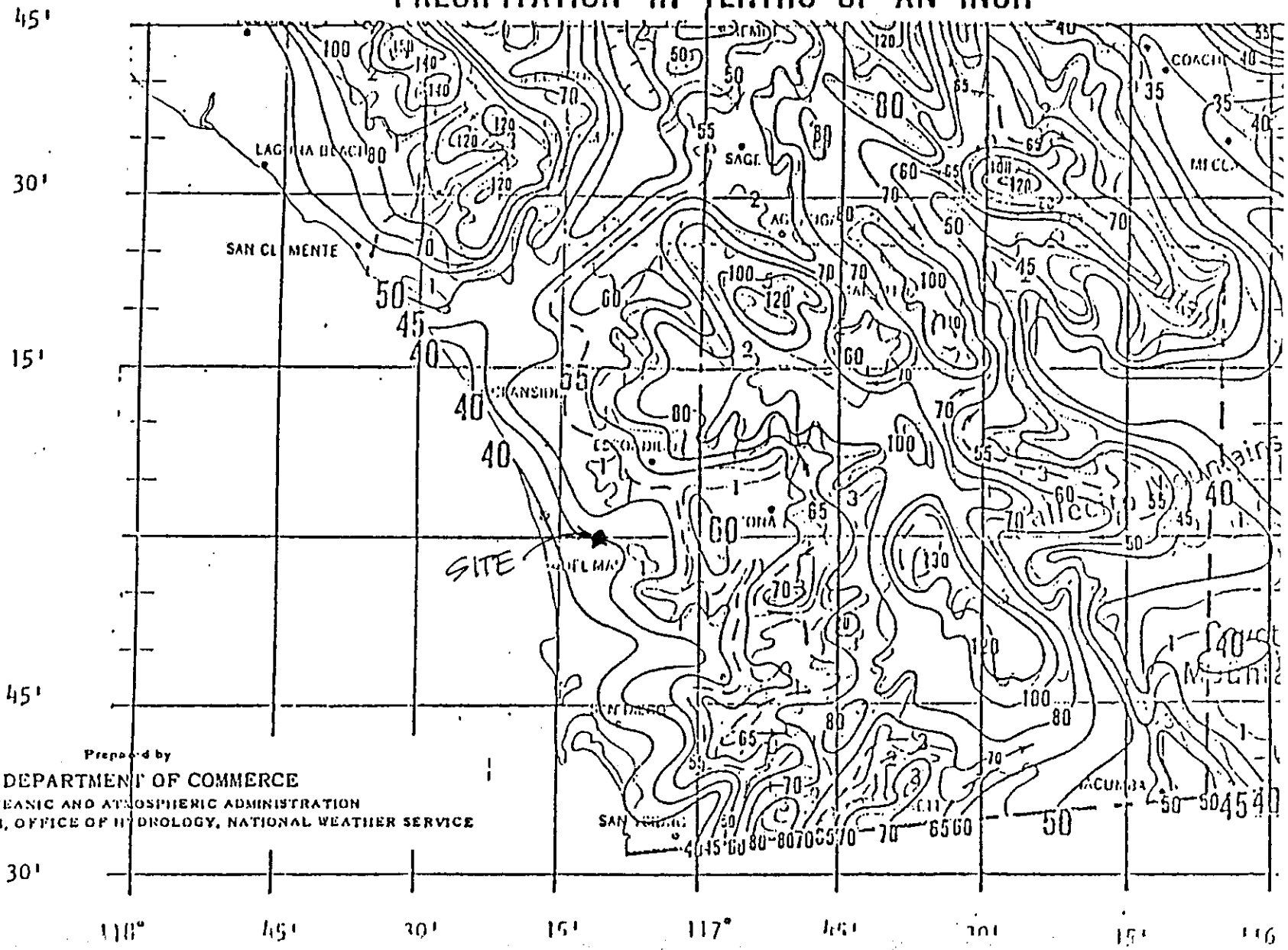

Prepared by
U.S. DEPARTMENT OF COMMERCE
NATIONAL OCEANIC AND ATMOSPHERIC ADMINISTRATION
SPECIAL STUDIES BRANCH, OFFICE OF HYDROLOGY, NATIONAL WEATHER SERVICE

HYDROLOGY/HYDRAULICS SUMMARY FOR SUB-BASINS

PROJECT NAME: NEWPORT PACIFIC
PROJECT NUMBER: 4200.02
COMMENT: PALMA DE LA REINA PROJECT

Grate Inlet Capacity *:

Sub-Basin for:	*Area [SF]*	*Area [AC]*	***Qpost[cfs]***	Q 4" PVC*	Q to 4" pvc (to surface)	Q to 4" pvc (to Rainstore3)UNO	h [ft]	Brooks CB	*TG Elev.*
DP-A1	4035	0.09	**0.49**	0.29	0.29 cfs	0.20 cfs	–	24"x24"	
DP-B1	2170	0.05	**0.26**	0.23	0.23 cfs	0.03 cfs	–	24"x24"	
DP-B2	1510	0.03	**0.18**	0.18	0.18 cfs	0.00 cfs		24"x24"	
DP-B5	5434	0.12	**0.65**		–	6" dia. 0.65 cfs	–	landscape drains	
DP-C1	6298	0.14	**0.76**	0.38	0.38 cfs	6" dia. 0.38	0.23	24"x24"	
DP-C2	2908	0.07	**0.35**	0.26	0.26 cfs	0.09 cfs	–	24"x24"	
DP-D1/D2/D3	6680	0.15	**0.80**		–	6" dia. 0.80 cfs	–	landscape drains	
DP-D4	2049	0.05	**0.25**	0.23	0.23 cfs	0.02 cfs	–	24"x24"	
DP-E1	4198	0.10	**0.51**	0.29	0.29 cfs	6" dia. 0.22 cfs		24"x24"	
DP-E2	2252	0.05	**0.27**	0.24	0.24 cfs	0.03 cfs		24"x24"	
DP-E3	3528	0.08	**0.43**	0.28	0.28 cfs	6" dia. 0.15 cfs		24"x24"	
DP-E4	1573	0.04	**0.19**	0.19	0.19 cfs	6" dia. 0.00 cfs		24"x24"	
DP-D6	5372	0.12	**0.88**	See Valley Gutter Capacity Calculation					
DP-D7	6453	0.15	**0.78**	See Valley Gutter Capacity Calculation					
DP-D6/7	11825	DP-D6 + DP-D7=	1.65	See Valley Gutter Capacity Calculation					
DP-A2	8879	0.20	**1.36**	12"x6"weir	0.82 cfs, h=0.39'	0.54 cfs	0.20	1-12"X12"	29.26
DP-B3	9385	0.22	**1.54**	12"x6"weir	0.92 cfs, h=0.42'	0.62 cfs	0.22	1-12"X12"	29.64
DP-C3	21287	0.49	**3.20**		1.41 cfs, to DP-C4 (1)	1.79 cfs	0.21	3-12"X12"	30.38
DP-C4	4252	0.10	**1.92**	12"x6"weir	1.15 cfs, h=0.49'	0.77 cfs	0.25	1-12"X12"	30.04
DP-D5	21385	0.49	**2.58**		1.13 cfs, to DP-D8 (1)	1.45 cfs	0.20	3-12"X12"	30.76
DP-D8	20377	0.47	**5.24**	4-12"x6"weir	1.10 cfs, h=0.48'	4.14 cfs	0.38	3-12"X12"	29.34
DP-E5	11593	0.27	**2.40**	18"x6"weir	1.44 cfs, h=0.44'	0.96 cfs	0.30	1-12"X12"	30.06
DP-F1	12130	0.28	**1.46**	12"x6"weir	0.88 cfs, h=0.41'	0.58 cfs	0.21	1-12"X12"	30.81
DP-G1	5300	0.12	**0.64**		0.64				
Entrances	12268	0.28	**1.48**		1.48 cfs				
	181316			sum=	8.43	sum= 13.41			
				Qpre runoff=	8.71	Qpost -Qpre= 13.13			

Note: Qpre= CIA, where C= 0.3, I = 6.56, A area in [AC]
Qpost= CIA, where C=0.8, I = 6.56, A area in [AC]
* - Q 4" PVC is dependent on culvert design, see attached calculations combining the effects of a built-in weir.
For Grate Inlet Capacity, see attached calculations.
For Parking Lot Calculations, see Weir and Catch Basin Calculations for those boxed values.
(1) See Valley Gutter Capacity Calculation

Sum	Qpost [cfs]	Qpre[cfs]	
	6.69	6.95	<<<=TARGET FLOWS
	1.74	1.76	<<<=TARGET FLOWS

Weir opening, for Rectangular Weir: $Q=C_w*L*h^{(1.5)}$
Where Cw = 3.33
L, h in [ft]
Q in [cfs] h= height above brick

Weir created by 4" high x 12" wide brick wall inside catch basin

CULVERT DESIGN W/ WEIR CALCULATIONS FOR CATCH BASINS

WEIR LENGTH	1.00
WEIR COEFF	3.33

Q PRE-PIPE (cfs)	HEAD PRE-PIPE (ft)	HEAD WEIR (ft)	Q WEIR (cfs)	Q PIPE (cfs)	HEAD OVERFLOW PIPE (ft)	Q GRATE (cfs)	
0	0	0	0	0	0	0	
0.01	0.02	0	0.00	0.00	0.00	0.01	
0.02	0.03	0	0.00	0.00	0.00	0.02	
0.03	0.05	0	0.00	0.00	0.00	0.03	
0.04	0.07	0	0.00	0.00	0.00	0.04	
0.05	0.08	0	0.00	0.00	0.00	0.05	
0.06	0.10	0	0.00	0.00	0.00	0.06	
0.07	0.11	0	0.00	0.00	0.00	0.07	
0.08	0.12	0	0.00	0.00	0.00	0.08	
0.09	0.14	0	0.00	0.00	0.00	0.09	
0.10	0.15	0	0.00	0.00	0.00	0.10	
0.11	0.17	0	0.00	0.00	0.00	0.11	
0.12	0.18	0	0.00	0.00	0.00	0.12	
0.13	0.20	0	0.00	0.00	0.00	0.13	
0.14	0.22	0	0.00	0.00	0.00	0.14	
0.15	0.24	0	0.00	0.00	0.00	0.15	
0.16	0.25	0	0.00	0.00	0.00	0.16	
0.17	0.26	0	0.00	0.00	0.00	0.17	
0.18	0.28	0	0.00	0.00	0.00	0.18	
0.19	0.29	0	0.00	0.00	0.00	0.19	
0.20	0.31	0	0.00	0.00	0.00	0.20	
0.21	0.32	0	0.00	0.00	0.00	0.21	
0.22	0.34	0.01	0.00	0.00	0.00	0.22	Head exceeds Weir height
0.23	0.36	0.03	0.02	0.02	0.02	0.25	
0.24	0.38	0.05	0.04	0.04	0.05	0.28	
0.25	0.39	0.06	0.05	0.05	0.07	0.30	
0.26	0.41	0.08	0.08	0.08	0.11	0.34	
0.27	0.43	0.1	0.11	0.11	0.15	0.38	
0.28	0.45	0.12	0.14	0.14	0.20	0.42	
0.29	0.48	0.15	0.19	0.19	0.29	0.48	
0.30	0.50	0.17	0.23	0.23	0.36	0.53	
0.31	0.52	0.19	0.28	0.28	0.43	0.59	
0.32	0.54	0.21	0.32	0.32	0.54	0.64	
0.33	0.57	0.24	0.39	0.33	0.57	0.66	Q WEIR EXCEEDS PIPE HERE
0.34	0.59	0.26	0.44	0.34	0.59	0.68	
0.35	0.62	0.29	0.52	0.35	0.62	0.70	
0.36	0.64	0.31	0.57	0.36	0.64	0.72	
0.37	0.67	0.34	0.66	0.37	0.67	0.74	
0.38	0.70	0.37	0.75	0.38	0.70	0.76	
0.39	0.72	0.39	0.81	0.39	0.72	0.78	
0.40	0.75	0.42	0.91	0.40	0.75	0.80	

SEE DETAIL OF CATCH BASIN ON FOLLOWING SHEET.

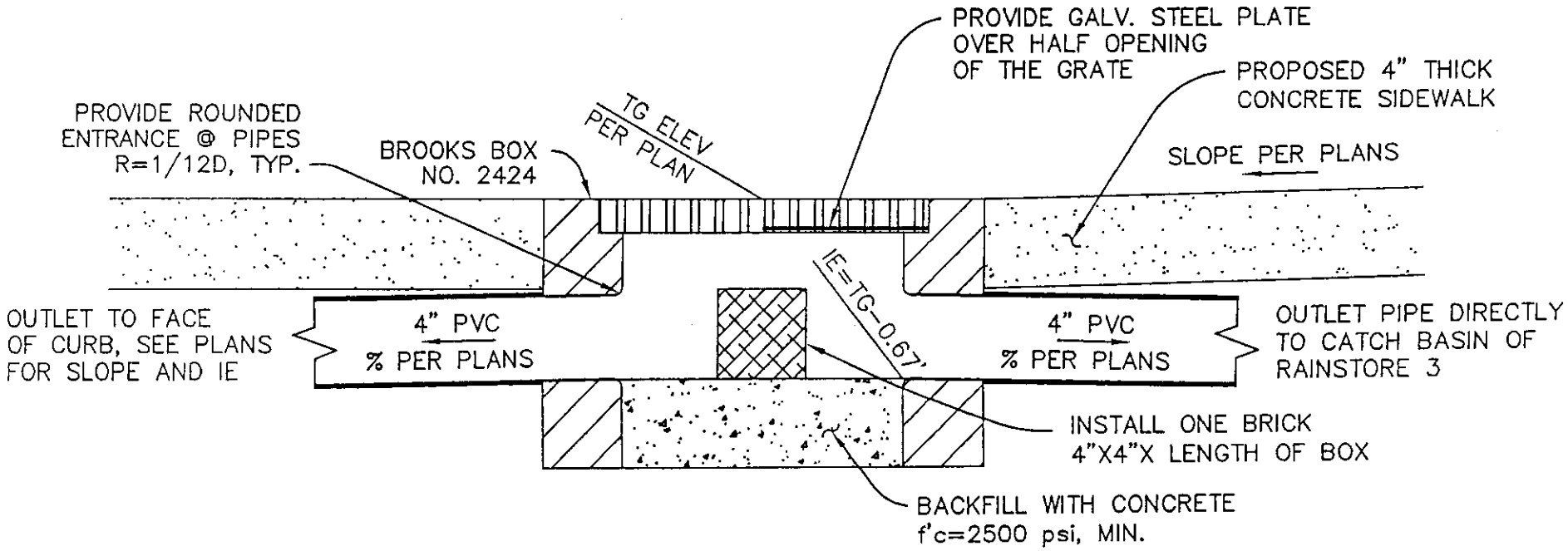

TYPICAL BOX DETAIL IN BUILDING AREAS

NOT TO SCALE

Channel Calculator

Given Input Data:

Shape	Trapezoidal
Solving for	Depth of Flow
Flowrate	0.8700 cfs
Slope	0.0050 ft/ft
Manning's n	0.0130
Height	0.5000 ft
Bottom width	0.0000 ft
Left slope	0.1250 ft/ft (V/H)
Right slope	0.1250 ft/ft (V/H)

Computed Results:

Depth	0.2368 ft
Velocity	1.9390 fps
Full Flowrate	6.3822 cfs
Flow area	0.4487 ft2
Flow perimeter	3.8187 ft
Hydraulic radius	0.1175 ft
Top width	3.7892 ft
Area	2.0000 ft2
Perimeter	8.0623 ft
Percent full	47.3647 %

Critical Information

Critical depth	0.2362 ft
Critical slope	0.0051 ft/ft
Critical velocity	1.9493 fps
Critical area	0.4463 ft2
Critical perimeter	3.8086 ft
Critical hydraulic radius	0.1172 ft
Critical top width	3.7792 ft
Specific energy	0.2953 ft
Minimum energy	0.3543 ft
Froude number	0.9934
Flow condition	Subcritical

Channel Calculator

Given Input Data:

Shape	Trapezoidal
Solving for	Depth of Flow
Flowrate	0.7800 cfs
Slope	0.0050 ft/ft
Manning's n	0.0130
Height	0.5000 ft
Bottom width	0.0000 ft
Left slope	3.0000 ft/ft (V/H)
Right slope	0.1250 ft/ft (V/H)

Computed Results:

Depth	0.2963 ft
Velocity	2.1317 fps
Full Flowrate	3.1471 cfs
Flow area	0.3659 ft2
Flow perimeter	2.7015 ft
Hydraulic radius	0.1354 ft
Top width	2.4695 ft
Area	1.0417 ft2
Perimeter	4.5582 ft
Percent full	59.2676 %

Critical Information

Critical depth	0.2935 ft
Critical slope	0.0053 ft/ft
Critical velocity	2.1730 fps
Critical area	0.3590 ft2
Critical perimeter	2.6758 ft
Critical hydraulic radius	0.1342 ft
Critical top width	2.4459 ft
Specific energy	0.3670 ft
Minimum energy	0.4403 ft
Froude number	0.9763
Flow condition	Subcritical

WEIR AND CATCH BASIN CALCULATIONS

Weir Capacity: $Q=3.33Lh^{(3/2)}$

12"x6" opening:		18"x6" opening:
H[ft]	Q[cfs]	Q[cfs]
0.00	0.000	0.000
0.01	0.003	0.005
0.02	0.009	0.014
0.03	0.017	0.026
0.04	0.027	0.040
0.05	0.037	0.056
0.06	0.049	0.073
0.07	0.062	0.093
0.08	0.075	0.113
0.09	0.090	0.135
0.10	0.105	0.158
0.11	0.121	0.182
0.12	0.138	0.208
0.13	0.156	0.234
0.14	0.174	0.262
0.15	0.193	0.290
0.16	0.213	0.320
0.17	0.233	0.350
0.18	0.254	0.381
0.19	0.276	0.414
0.20	0.298	0.447
0.21	0.320	0.481
0.22	0.344	0.515
0.23	0.367	0.551
0.24	0.392	0.587
0.25	0.416	0.624
0.26	0.441	0.662
0.27	0.467	0.701
0.28	0.493	0.740
0.29	0.520	0.780
0.30	0.547	0.821
0.31	0.575	0.862
0.32	0.603	0.904
0.33	0.631	0.947
0.34	0.660	0.990
0.35	0.690	1.034
0.36	0.719	1.079
0.37	0.749	1.124
0.38	0.780	1.170
0.39	0.811	1.217
0.40	0.842	1.264
0.41	0.874	1.311
0.42	0.906	1.360
0.43	0.939	1.408
0.44	0.972	1.458
0.45	1.005	1.508
0.46	1.039	1.558
0.47	1.073	1.609
0.48	1.107	1.661
0.49	1.142	1.713
0.50	1.177	1.766

Catch Basin Capacity:

Typical 12"x12" Brooks Box:		Against Curb Face:	
H[ft]	Q[cfs]	H[ft]	Q[cfs]
0.00	0.000	0.00	0.000
0.01	0.006	0.01	0.005
0.02	0.017	0.02	0.013
0.03	0.031	0.03	0.023
0.04	0.048	0.04	0.036
0.05	0.067	0.05	0.050
0.06	0.088	0.06	0.066
0.07	0.111	0.07	0.083
0.08	0.136	0.08	0.102
0.09	0.162	0.09	0.122
0.10	0.190	0.10	0.142
0.11	0.219	0.11	0.164
0.12	0.249	0.12	0.187
0.13	0.281	0.13	0.211
0.14	0.314	0.14	0.236
0.15	0.349	0.15	0.261
0.16	0.384	0.16	0.288
0.17	0.421	0.17	0.315
0.18	0.458	0.18	0.344
0.19	0.497	0.19	0.373
0.20	0.537	0.20	0.402
0.21	0.577	0.21	0.433
0.22	0.619	0.22	0.464
0.23	0.662	0.23	0.496
0.24	0.705	0.24	0.529
0.25	0.750	0.25	0.563
0.26	0.795	0.26	0.597
0.27	0.842	0.27	0.631
0.28	0.889	0.28	0.667
0.29	0.937	0.29	0.703
0.30	0.986	0.30	0.739
0.31	1.036	0.31	0.777
0.32	1.086	0.32	0.815
0.33	1.137	0.33	0.853
0.34	1.190	0.34	0.892
0.35	1.242	0.35	0.932
0.36	1.296	0.36	0.972
0.37	1.350	0.37	1.013
0.38	1.405	0.38	1.054
0.39	1.461	0.39	1.096
0.40	1.518	0.40	1.138

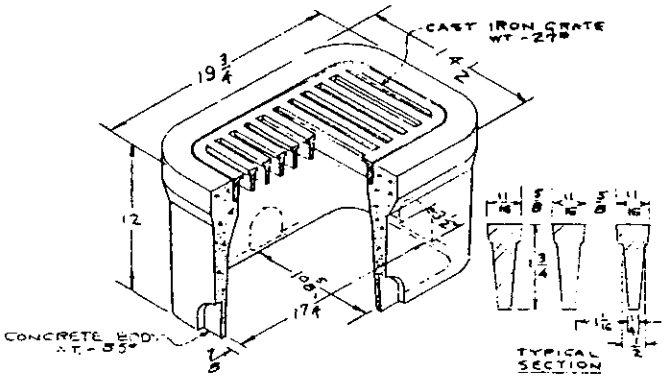

No. 36 DRAIN BOX

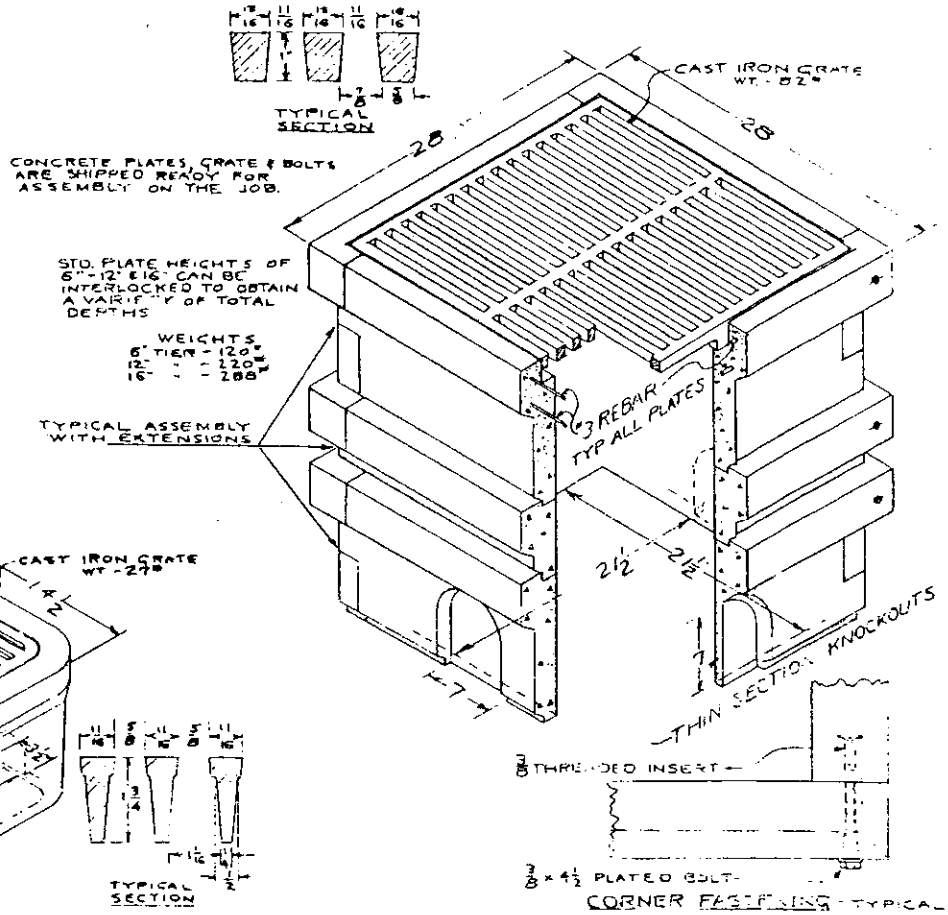

No. 722 DRAIN BOX
(NON-TRAFFIC)

NOTE - No.3 - No.36 & No.38 DRAIN BOXES AND EXTENSIONS ARE ALSO AVAILABLE IN DEPTHS OF 6" & 8" AS WELL AS 12" AND CAN BE SUPPLIED WITH OR WITHOUT PIPE SLOTS.

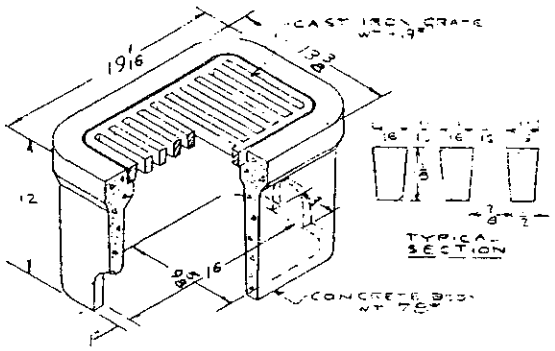

No. 3 DRAIN BOX

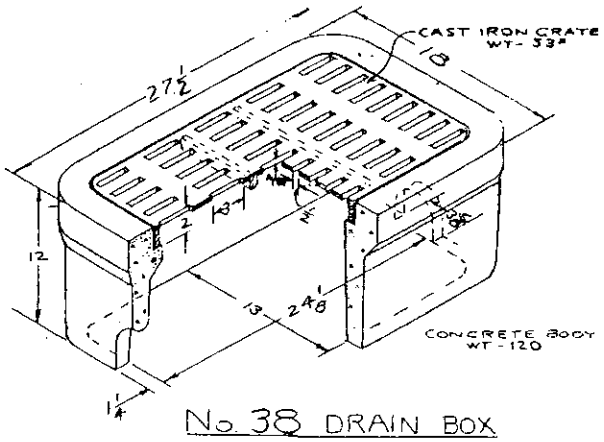

No. 38 DRAIN BOX

DRAIN BOXES WITH CAST IRON GRATES	
BROOKS PRODUCTS INC. EL MONTE OAKLAND	
SCALE - NONE	No. 711
DATE - 12-8-60	BY [illegible]

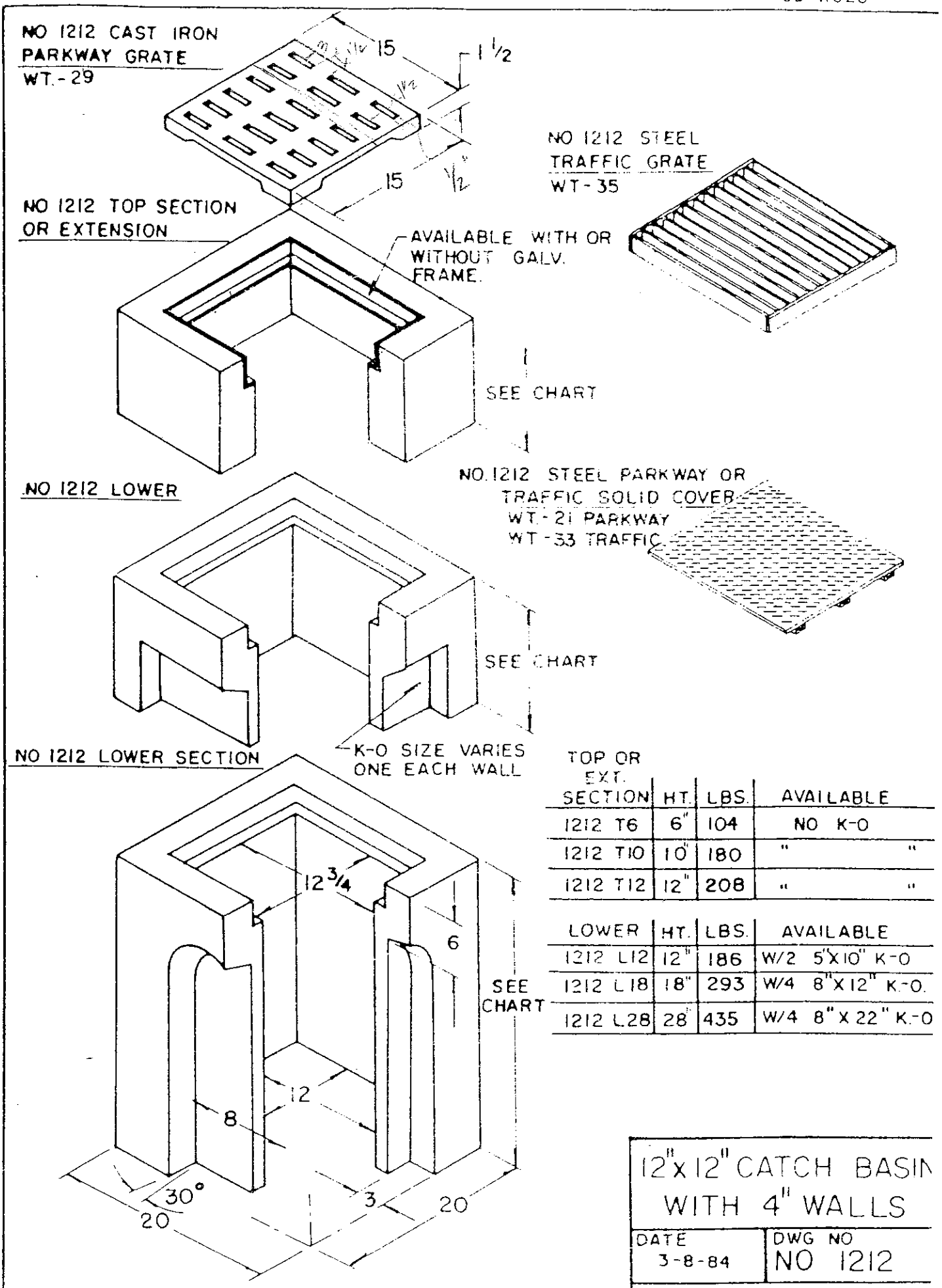

TOP OR EXT. SECTION	HT.	LBS.	AVAILABLE
1212 T6	6"	104	NO K-O
1212 T10	10"	180	" "
1212 T12	12"	208	" "

LOWER	HT.	LBS.	AVAILABLE
1212 L12	12"	186	W/2 5"X10" K-O
1212 L18	18"	293	W/4 8"X12" K-O.
1212 L28	28"	435	W/4 8"X22" K-O

12"x12" CATCH BASIN
WITH 4" WALLS

DATE	DWG NO
3-8-84	NO 1212

BROOKS PRODUCTS

213-283

CD-W031

NO 2424 CAST IRON PARKWAY GRATE
WT. 115

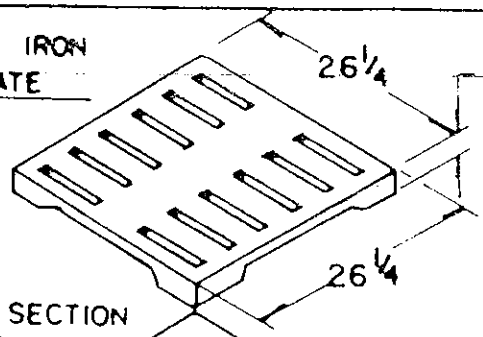

22825 SQ - OPENING PER MANUFACTURER

NO 2424 STEEL TRAFFIC GRATE
WT. 96

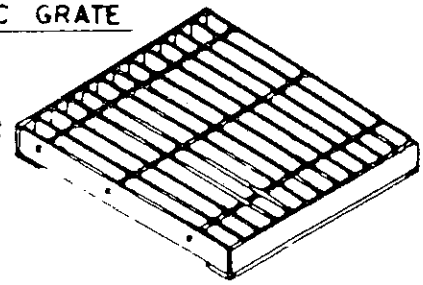

NO 2424 TOP SECTION OR EXTENSION
W/O K-O

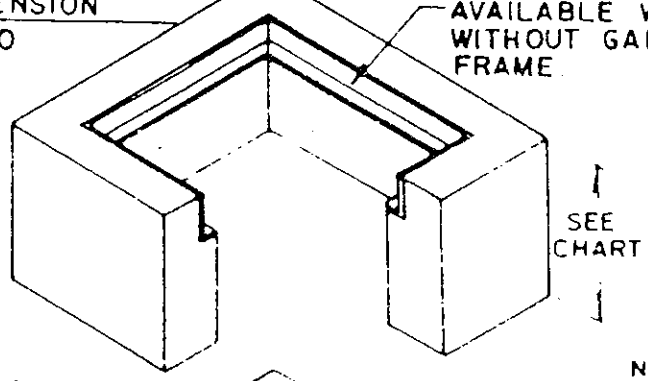

NO 2424 STEEL PARKWAY OR TRAFFIC SOLID COVER
WT. 80 PARKWAY
WT 105 TRAF.

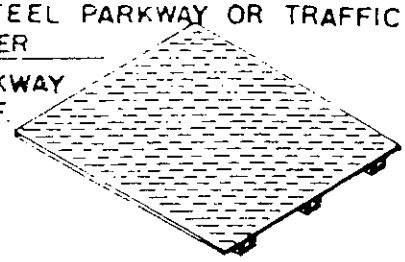

NO 2424 LOWER SECTION
W K-O

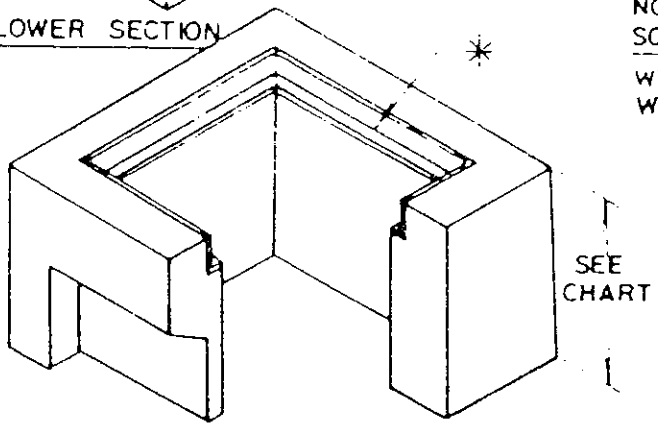

* TOP SECTIONS AND BOTTOM SECTIONS AVAILABLE WITH FRAME

NO 2424 LOWER

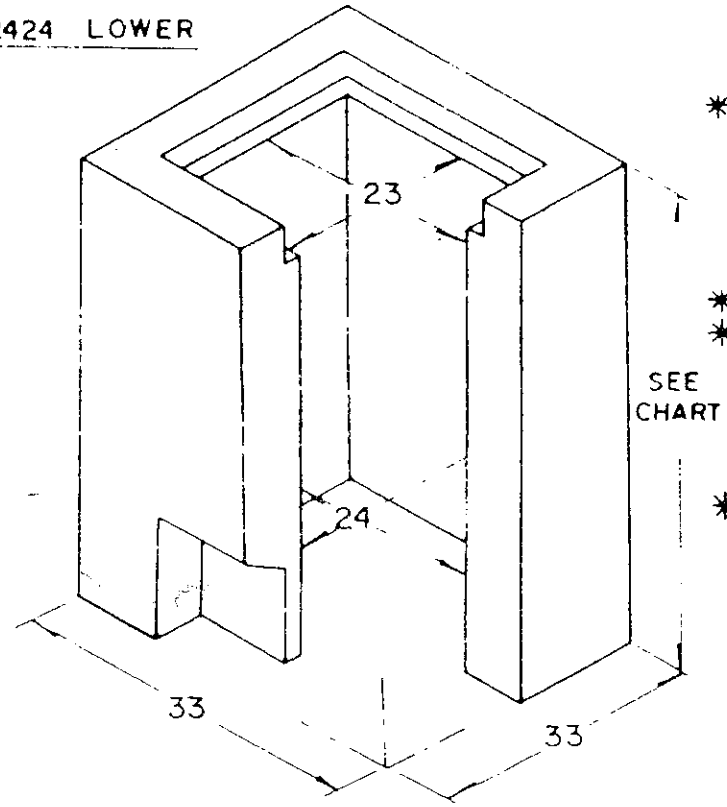

TOP OR EXT. SECTION	HT	LBS	AVAILABLE
2424 T6	6	303	NO K-O
* 2424 T12	12	606	" "
2424 T18	18	909	"
2424 T24	24	1030	W/2 14 X 14 K-O.

LOWER	HT	LBS	AVAILABLE
2424 L 12	12	606	W/2 5 X 14 K-O.
* 2424 L 18	18	909	W/2 8 X 14 K-O.
* 2424 L 24	24	606	W/2 14 X 14 K-O.
2424 L 30	30	2030	" "
2424 L 36	36	2300	" "

BOTTOM	HT.	LBS	AVAILABLE
* 2424 B 30	30	2408	W/2 14 X 14 K-O.
2424 B 36	36	2678	" "

24"x24" CATCH BASIN WITH 5" WALLS

DATE	DWG NO.
3-8-84	NO. 2424

BROOKS PRODUCTS

Annie's Copy

INSTRUCTIONS FOR USE OF FIG. 1073.02
CAPACITY OF GRATE INLETS IN A SUMP

Fig. 1073.02 applies only when the grate is located in a low point or sump where the water will pond at the grate.

The capacity of the grate depends upon the area of the openings and the depth of water at the grate. Recent experiments (1) have determined that a grate will act as a weir and follow the weir formula for depths (heads) on the grate up to 0.4 ft. It will act as an orifice and follow the orifice formula for heads of 1.4 ft. and over. For heads between 0.4 ft. and 1.4 ft. the operation is indefinite because of vortices and eddies over the grate.

In the usual problem the following are given:

1. A particular design of grate, with dimensions
2. A design discharge (Q) or information as to drainage area, rainfall intensities and runoff coefficients from which a design discharge can be estimated.

Procedure:

1. Compute the perimeter of the grate opening (P) ignoring the bars and omitting any side over which the water does not enter, such as when one side is against the face of a curb. Divide the result by 2. This allows for partial clogging of the grate by assuming that only half of the perimeter will be effective.
2. Compute the Q/P ratio.
3. Compute the total area of clear opening (a), excluding area taken up by bars, and divide by 2. This allows for partial clogging of the grate by assuming that only half of the area will be effective.
4. Compute the Q/A ratio.
5. Enter the chart at the bottom scale using line (a) with the Q/P value and line (b) with the Q/A value and read the required head in feet at the left margin.
6. If the required head falls below 0.4, (a) only will apply. This is the usual case.
7. If the required head falls above 1.4 ft., (b) only will apply.

---

(1) Airfield Drainage Structure Investigation (Final Report)
Hydraulic Laboratory Report No. 54
U. S. Corps of Engineers, St. Paul District Suboffice, April 1949.

8. If the required head falls between 0.4 ft. and 1.4 ft. the actual head may be anywhere between (a) and (b). Use the value that gives the most conservative result, being sure to use line (a) with Q/P and line (b) with Q/A.

   Vortices and eddies over the grate may cause the actual head to differ from the required head in this case (see second paragraph).

9. If the inlet is a combination type with grate and curb opening the recommended procedure is the same as with a grate alone except the perimeter and area are not divided by 2. The reason for this is that the curb opening will serve as a relief in event the grate becomes clogged. With the grate operating freely it is questionable whether much water will get to the curb opening until the discharge is sufficient to submerge the entire grate.

10. If the grate has an appreciable cross slope so the side away from the curb is higher than that next to the curb the inflow over the side should be determined separately from that over the ends. Use the depth at the middle of the grate for end inflow and depth at edge away from the curb for side inflow.

10W: Depth going into grate, h

$h < 0.4'$ use Eqn. (a)

$1.4' < h$ use Eqn (b)

$0.4' < h < 1.4'$ compare results of (a) and (b) and use most conservative, ie, worst depth.

1073.02

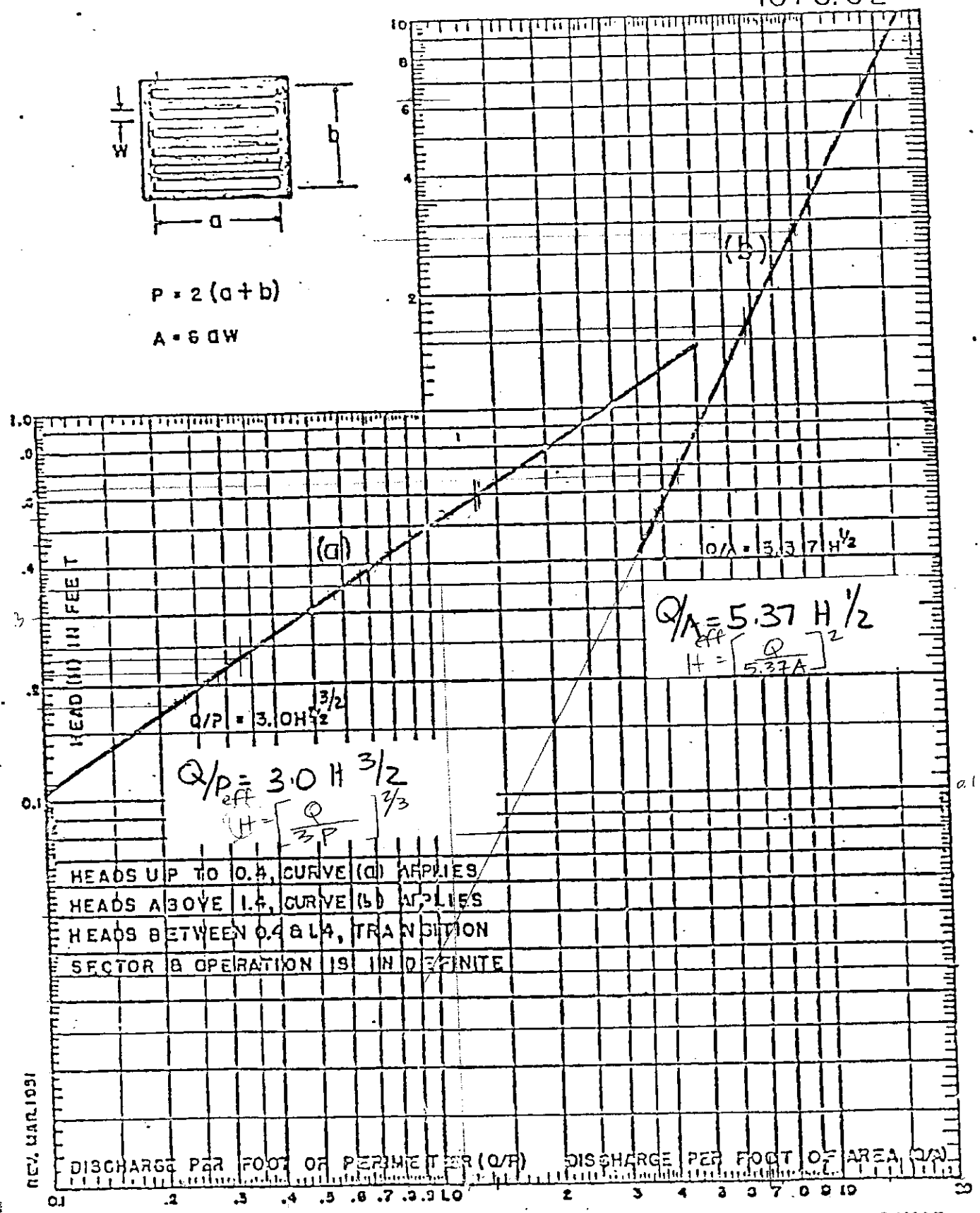

BUREAU OF PUBLIC ROADS
DIVISION TWO WASH, D.C.

CAPACITY OF GRATE INLET IN SUMP
WATER PONDED ON GRATE

GRATE INLET CALC, CONT'D 4200.02 NP

BROOKS 12x12 CATCH BASIN.

PLACE STL. PLATE TO COVER ½ OPENINGS

$P_{eff} = \frac{(6+12)}{2} = 9'' = \underline{0.75'}$ $Q_{100} = 0.43(DP-2)$

$\frac{Q}{P_{eff}} = \frac{0.43}{1.5} = 0.29$ $H_{reqd} = 0.21'$

$A_{eff} = \frac{9 \times 3 \times 0.5}{2} = 6.75 \text{ in}^2 = \underline{0.0469 \text{ ft}^2}$

$\frac{Q}{A_{eff}} = \frac{0.43}{0.0469} = 9.17$ $H_{reqd} = 2.80'$ n.g.

USE 2 INLETS AT DP2 $A_{eff} = 2 \times 0.0469 = 0.0938 \text{ ft}^2$

$\frac{Q}{A_{eff}} = \frac{0.43}{0.0938} = 4.58$ $H_{reqd} = 0.64'$ ok

DP3: $Q_{100} = 0.35$ $\frac{Q}{P_{eff}} = 0.23$ $H = 0.18'$

$\frac{Q}{A_{eff}} = 7.46$ $H = 1.85'$

USE 2 INLETS AT DP3, DP4 $A_{eff} = 0.0938$

$\frac{Q}{A_{eff}} = 3.73$ $H = 0.48'$ ok

TRY 24" x 24" CATCH BASIN.

GRATE INLET CALC. CONT'D 4200.02 N.P.

24" × 24" CATCH BASIN w/ STEEL TR OVER 1/2 INLET

$A = 228.26\ in^2/2 = 114.13\ in^2$ $P = 13.13 + 26.25 = 39.4''$
$= 328$

$A_{eff} = 57.06\ in^2 = 0.40\ ft^2$ $P_{eff} = 1.64\ ft$

DP-C1: $Q_{100} = 0.54\ cfs$

$\frac{Q}{P_{eff}} = \frac{0.54}{1.64} = 0.33$ $H = 0.23'$ ← GOVERNS.

$\frac{Q}{A_{eff}} = \frac{0.54}{0.40} = 1.35$ $H < 0.10'$

USE 24"x24" CATCH BASIN FOR SUB-BASINS IN BLDG AREAS

DP5: $Q_{100} = 0.77\ cfs$, ✓ 24"x24" C.B.

$\frac{Q}{P_{eff}} = 0.47$ $H = 0.28'$ ← GOVERNS

$\frac{Q}{A_{eff}} = 1.93$ $H = 0.13$

Channel Calculator

Given Input Data:

Shape	Trapezoidal
Solving for	Depth of Flow
Flowrate	1.7300 cfs
Slope	0.0100 ft/ft
Manning's n	0.0130
Height	0.5000 ft
Bottom width	0.0000 ft
Left slope	0.0150 ft/ft (V/H)
Right slope	0.0150 ft/ft (V/H)

Computed Results:

Depth	0.1213 ft
Velocity	1.7642 fps
Full Flowrate	75.5994 cfs
Flow area	0.9806 ft2
Flow perimeter	16.1726 ft
Hydraulic radius	0.0606 ft
Top width	16.1708 ft
Area	16.6667 ft2
Perimeter	66.6742 ft
Percent full	24.2562 %

Critical Information

Critical depth	0.1332 ft
Critical slope	0.0061 ft/ft
Critical velocity	1.4636 fps
Critical area	1.1820 ft2
Critical perimeter	17.7561 ft
Critical hydraulic radius	0.0666 ft
Critical top width	17.7541 ft
Specific energy	0.1697 ft
Minimum energy	0.1997 ft
Froude number	1.2630
Flow condition	Supercritical

Channel Calculator

Given Input Data:

Shape	Trapezoidal
Solving for	Depth of Flow
Flowrate	5.7200 cfs
Slope	0.0100 ft/ft
Manning's n	0.0130
Height	0.5000 ft
Bottom width	0.0000 ft
Left slope	3.0000 ft/ft (V/H)
Right slope	0.0200 ft/ft (V/H)

Computed Results:

Depth	0.2746 ft
Velocity	3.0134 fps
Full Flowrate	28.2680 cfs
Flow area	1.8982 ft2
Flow perimeter	14.0241 ft
Hydraulic radius	0.1354 ft
Top width	13.8234 ft
Area	6.2917 ft2
Perimeter	25.5320 ft
Percent full	54.9273 %

Critical Information

Critical depth	0.3172 ft
Critical slope	0.0046 ft/ft
Critical velocity	2.2589 fps
Critical area	2.5322 ft2
Critical perimeter	16.1975 ft
Critical hydraulic radius	0.1563 ft
Critical top width	15.9657 ft
Specific energy	0.4158 ft
Minimum energy	0.4758 ft
Froude number	1.4336
Flow condition	Supercritical

Channel Calculator

Given Input Data:

Shape	Trapezoidal
Solving for	Depth of Flow
Flowrate	1.2400 cfs
Slope	0.0050 ft/ft
Manning's n	0.0130
Height	0.5000 ft
Bottom width	0.0000 ft
Left slope	3.0000 ft/ft (V/H)
Right slope	0.0200 ft/ft (V/H)

Computed Results:

Depth	0.1763 ft
Velocity	1.5855 fps
Full Flowrate	19.9885 cfs
Flow area	0.7821 ft2
Flow perimeter	9.0017 ft
Hydraulic radius	0.0869 ft
Top width	8.8729 ft
Area	6.2917 ft2
Perimeter	25.5320 ft
Percent full	35.2566 %

Critical Information

Critical depth	0.1721 ft
Critical slope	0.0057 ft/ft
Critical velocity	1.6638 fps
Critical area	0.7453 ft2
Critical perimeter	8.7874 ft
Critical hydraulic radius	0.0848 ft
Critical top width	8.6616 ft
Specific energy	0.2154 ft
Minimum energy	0.2581 ft
Froude number	0.9415
Flow condition	Subcritical

Channel Calculator

Given Input Data:

Shape	Trapezoidal
Solving for	Depth of Flow
Flowrate	1.3200 cfs
Slope	0.0060 ft/ft
Manning's n	0.0130
Height	0.5000 ft
Bottom width	0.0000 ft
Left slope	3.0000 ft/ft (V/H)
Right slope	0.0200 ft/ft (V/H)

Computed Results:

Depth	0.1744 ft
Velocity	1.7245 fps
Full Flowrate	21.8963 cfs
Flow area	0.7655 ft2
Flow perimeter	8.9056 ft
Hydraulic radius	0.0860 ft
Top width	8.7781 ft
Area	6.2917 ft2
Perimeter	25.5320 ft
Percent full	34.8800 %

Critical Information

Critical depth	0.1764 ft
Critical slope	0.0056 ft/ft
Critical velocity	1.6848 fps
Critical area	0.7835 ft2
Critical perimeter	9.0099 ft
Critical hydraulic radius	0.0870 ft
Critical top width	8.8810 ft
Specific energy	0.2206 ft
Minimum energy	0.2647 ft
Froude number	1.0295
Flow condition	Supercritical

Manning Pipe Calculator

Given Input Data:

Shape	Circular
Solving for	Flowrate
Diameter	0.5000 ft
Depth	0.5000 ft
Slope	0.0200 ft/ft
Manning's n	0.0110

Computed Results:

Flowrate	0.9378 cfs
Area	0.1963 ft2
Wetted Area	0.1963 ft2
Wetted Perimeter	1.5708 ft
Perimeter	1.5708 ft
Velocity	4.7762 fps
Hydraulic Radius	0.1250 ft
Percent Full	100.0000 %
Full flow Flowrate	0.9378 cfs
Full flow velocity	4.7762 fps

Manning Pipe Calculator

Given Input Data:

Shape	Circular
Solving for	Depth of Flow
Diameter	0.5000 ft
Flowrate	0.6500 cfs
Slope	0.0087 ft/ft
Manning's n	0.0110

Computed Results:

Depth	0.4376 ft
Area	0.1963 ft2
Wetted Area	0.1822 ft2
Wetted Perimeter	1.2098 ft
Perimeter	1.5708 ft
Velocity	3.5671 fps
Hydraulic Radius	0.1506 ft
Percent Full	87.5224 %
Full flow Flowrate	0.6185 cfs
Full flow velocity	3.1501 fps

Critical Information

Critical depth	0.4282 ft
Critical slope	0.0074 ft/ft
Critical velocity	3.4712 fps
Critical area	0.1873 ft2
Critical perimeter	1.1417 ft
Critical hydraulic radius	0.1640 ft
Critical top width	0.5000 ft
Specific energy	0.6181 ft
Minimum energy	0.6422 ft
Froude number	1.1075
Flow condition	Supercritical

Manning Pipe Calculator

Given Input Data:

Shape	Circular
Solving for	Depth of Flow
Diameter	0.5000 ft
Flowrate	0.8000 cfs
Slope	0.0141 ft/ft
Manning's n	0.0110

Computed Results:

Depth	0.4174 ft
Area	0.1963 ft2
Wetted Area	0.1751 ft2
Wetted Perimeter	1.1523 ft
Perimeter	1.5708 ft
Velocity	4.5683 fps
Hydraulic Radius	0.1520 ft
Percent Full	83.4849 %
Full flow Flowrate	0.7874 cfs
Full flow velocity	4.0103 fps

Critical Information

Critical depth	0.4838 ft
Critical slope	0.0079 ft/ft
Critical velocity	3.7200 fps
Critical area	0.2151 ft2
Critical perimeter	1.2529 ft
Critical hydraulic radius	0.1716 ft
Critical top width	0.5000 ft
Specific energy	0.7373 ft
Minimum energy	0.7256 ft
Froude number	1.4198
Flow condition	Supercritical

Channel Calculator

Given Input Data:

Shape	Trapezoidal
Solving for	Depth of Flow
Flowrate	0.6400 cfs
Slope	0.0050 ft/ft
Manning's n	0.0130
Height	0.2500 ft
Bottom width	0.0000 ft
Left slope	0.1250 ft/ft (V/H)
Right slope	0.1250 ft/ft (V/H)

Computed Results:

Depth	0.2111 ft
Velocity	1.7957 fps
Full Flowrate	1.0051 cfs
Flow area	0.3564 ft2
Flow perimeter	3.4034 ft
Hydraulic radius	0.1047 ft
Top width	3.3771 ft
Area	0.5000 ft2
Perimeter	4.0311 ft
Percent full	84.4273 %

Critical Information

Critical depth	0.2089 ft
Critical slope	0.0053 ft/ft
Critical velocity	1.8332 fps
Critical area	0.3491 ft2
Critical perimeter	3.3684 ft
Critical hydraulic radius	0.1036 ft
Critical top width	3.3424 ft
Specific energy	0.2612 ft
Minimum energy	0.3134 ft
Froude number	0.9745
Flow condition	Subcritical

Channel Calculator

.iven Input Data:

Shape	Rectangular
Solving for	Depth of Flow
Flowrate	0.8200 cfs
Slope	0.0020 ft/ft
Manning's n	0.0130
Height	0.5000 ft
Bottom width	1.0000 ft

Computed Results:

Depth	0.4269 ft
Velocity	1.9206 fps
Full Flowrate	1.0143 cfs
Flow area	0.4269 ft2
Flow perimeter	1.8539 ft
Hydraulic radius	0.2303 ft
Top width	1.0000 ft
Area	0.5000 ft2
Perimeter	2.0000 ft
Percent full	85.3880 %

Critical Information

Critical depth	0.2754 ft
Critical slope	0.0068 ft/ft
Critical velocity	2.9770 fps
Critical area	0.2754 ft2
Critical perimeter	1.5509 ft
Critical hydraulic radius	0.1776 ft
Critical top width	1.0000 ft
Specific energy	0.4843 ft
Minimum energy	0.4132 ft
Froude number	0.5182
Flow condition	Subcritical

Channel Calculator

Given Input Data:

Shape	Trapezoidal
Solving for	Depth of Flow
Flowrate	0.3500 cfs
Slope	0.0200 ft/ft
Manning's n	0.0130
Height	0.5000 ft
Bottom width	0.0000 ft
Left slope	3.0000 ft/ft (V/H)
Right slope	0.0625 ft/ft (V/H)

Computed Results:

Depth	0.1300 ft
Velocity	2.5361 fps
Full Flowrate	12.7107 cfs
Flow area	0.1380 ft2
Flow perimeter	2.2210 ft
Hydraulic radius	0.0621 ft
Top width	2.1233 ft
Area	2.0417 ft2
Perimeter	8.5427 ft
Percent full	25.9993 %

Critical Information

Critical depth	0.1627 ft
Critical slope	0.0060 ft/ft
Critical velocity	1.6181 fps
Critical area	0.2163 ft2
Critical perimeter	2.7806 ft
Critical hydraulic radius	0.0778 ft
Critical top width	2.6582 ft
Specific energy	0.2299 ft
Minimum energy	0.2441 ft
Froude number	1.7537
Flow condition	Supercritical

Channel Calculator

Given Input Data:

Shape	Rectangular
Solving for	Depth of Flow
Flowrate	0.9200 cfs
Slope	0.0080 ft/ft
Manning's n	0.0130
Height	0.5000 ft
Bottom width	1.0000 ft

Computed Results:

Depth	0.2820 ft
Velocity	3.2629 fps
Full Flowrate	2.0287 cfs
Flow area	0.2820 ft2
Flow perimeter	1.5639 ft
Hydraulic radius	0.1803 ft
Top width	1.0000 ft
Area	0.5000 ft2
Perimeter	2.0000 ft
Percent full	56.3918 %

Critical Information

Critical depth	0.2974 ft
Critical slope	0.0069 ft/ft
Critical velocity	3.0934 fps
Critical area	0.2974 ft2
Critical perimeter	1.5948 ft
Critical hydraulic radius	0.1865 ft
Critical top width	1.0000 ft
Specific energy	0.4474 ft
Minimum energy	0.4461 ft
Froude number	1.0833
Flow condition	Supercritical

Channel Calculator

Given Input Data:

Shape	Trapezoidal
Solving for	Depth of Flow
Flowrate	0.3000 cfs
Slope	0.0364 ft/ft
Manning's n	0.0130
Height	0.5000 ft
Bottom width	0.0000 ft
Left slope	3.0000 ft/ft (V/H)
Right slope	0.0625 ft/ft (V/H)

Computed Results:

Depth	0.1097 ft
Velocity	3.0546 fps
Full Flowrate	17.1477 cfs
Flow area	0.0982 ft2
Flow perimeter	1.8736 ft
Hydraulic radius	0.0524 ft
Top width	1.7912 ft
Area	2.0417 ft2
Perimeter	8.5427 ft
Percent full	21.9328 %

Critical Information

Critical depth	0.1530 ft
Critical slope	0.0062 ft/ft
Critical velocity	1.5689 fps
Critical area	0.1912 ft2
Critical perimeter	2.6143 ft
Critical hydraulic radius	0.0731 ft
Critical top width	2.4993 ft
Specific energy	0.2547 ft
Minimum energy	0.2295 ft
Froude number	2.2997
Flow condition	Supercritical

Channel Calculator

Given Input Data:

Shape	Rectangular
Solving for	Depth of Flow
Flowrate	1.1500 cfs
Slope	0.0260 ft/ft
Manning's n	0.0130
Height	0.5000 ft
Bottom width	1.0000 ft

Computed Results:

Depth	0.2189 ft
Velocity	5.2547 fps
Full Flowrate	3.6573 cfs
Flow area	0.2189 ft2
Flow perimeter	1.4377 ft
Hydraulic radius	0.1522 ft
Top width	1.0000 ft
Area	0.5000 ft2
Perimeter	2.0000 ft
Percent full	43.7703 %

Critical Information

Critical depth	0.3451 ft
Critical slope	0.0071 ft/ft
Critical velocity	3.3322 fps
Critical area	0.3451 ft2
Critical perimeter	1.6902 ft
Critical hydraulic radius	0.2042 ft
Critical top width	1.0000 ft
Specific energy	0.6480 ft
Minimum energy	0.5177 ft
Froude number	1.9803
Flow condition	Supercritical

Channel Calculator

iven Input Data:

Shape	Trapezoidal
Solving for	Depth of Flow
Flowrate	0.2900 cfs
Slope	0.0300 ft/ft
Manning's n	0.0130
Height	0.5000 ft
Bottom width	0.0000 ft
Left slope	3.0000 ft/ft (V/H)
Right slope	0.0625 ft/ft (V/H)

omputed Results:

Depth	0.1123 ft
Velocity	2.8169 fps
Full Flowrate	15.5674 cfs
Flow area	0.1029 ft2
Flow perimeter	1.9183 ft
Hydraulic radius	0.0537 ft
Top width	1.8338 ft
Area	2.0417 ft2
Perimeter	8.5427 ft
Percent full	22.4553 %

Critical Information

Critical depth	0.1510 ft
Critical slope	0.0062 ft/ft
Critical velocity	1.5583 fps
Critical area	0.1861 ft2
Critical perimeter	2.5791 ft
Critical hydraulic radius	0.0722 ft
Critical top width	2.4656 ft
Specific energy	0.2356 ft
Minimum energy	0.2264 ft
Froude number	2.0960
Flow condition	Supercritical

Channel Calculator

iven Input Data:

Shape	Rectangular
Solving for	Depth of Flow
Flowrate	1.1000 cfs
Slope	0.0420 ft/ft
Manning's n	0.0130
Height	0.5000 ft
Bottom width	4.0000 ft

Computed Results:

Depth	0.0704 ft
Velocity	3.9043 fps
Full Flowrate	25.4353 cfs
Flow area	0.2817 ft2
Flow perimeter	4.1409 ft
Hydraulic radius	0.0680 ft
Top width	4.0000 ft
Area	2.0000 ft2
Perimeter	5.0000 ft
Percent full	14.0871 %

Critical Information

Critical depth	0.1330 ft
Critical slope	0.0053 ft/ft
Critical velocity	2.0683 fps
Critical area	0.5318 ft2
Critical perimeter	4.2659 ft
Critical hydraulic radius	0.1247 ft
Critical top width	4.0000 ft
Specific energy	0.3073 ft
Minimum energy	0.1994 ft
Froude number	2.5935
Flow condition	Supercritical

Channel Calculator

iven Input Data:

Shape	Trapezoidal
Solving for	Depth of Flow
Flowrate	0.2900 cfs
Slope	0.0380 ft/ft
Manning's n	0.0130
Height	0.5000 ft
Bottom width	0.0000 ft
Left slope	3.0000 ft/ft (V/H)
Right slope	0.0625 ft/ft (V/H)

omputed Results:

Depth	0.1074 ft
Velocity	3.0780 fps
Full Flowrate	17.5205 cfs
Flow area	0.0942 ft2
Flow perimeter	1.8351 ft
Hydraulic radius	0.0513 ft
Top width	1.7543 ft
Area	2.0417 ft2
Perimeter	8.5427 ft
Percent full	21.4817 %

Critical Information

Critical depth	0.1510 ft
Critical slope	0.0062 ft/ft
Critical velocity	1.5583 fps
Critical area	0.1861 ft2
Critical perimeter	2.5791 ft
Critical hydraulic radius	0.0722 ft
Critical top width	2.4656 ft
Specific energy	0.2546 ft
Minimum energy	0.2264 ft
Froude number	2.3416
Flow condition	Supercritical

Channel Calculator

iven Input Data:

Shape	Rectangular
Solving for	Depth of Flow
Flowrate	1.4400 cfs
Slope	0.0210 ft/ft
Manning's n	0.0130
Height	0.5000 ft
Bottom width	1.0000 ft

Computed Results:

Depth	0.2752 ft
Velocity	5.2321 fps
Full Flowrate	3.2869 cfs
Flow area	0.2752 ft2
Flow perimeter	1.5505 ft
Hydraulic radius	0.1775 ft
Top width	1.0000 ft
Area	0.5000 ft2
Perimeter	2.0000 ft
Percent full	55.0452 %

Critical Information

Critical depth	0.4009 ft
Critical slope	0.0073 ft/ft
Critical velocity	3.5916 fps
Critical area	0.4009 ft2
Critical perimeter	1.8019 ft
Critical hydraulic radius	0.2225 ft
Critical top width	1.0000 ft
Specific energy	0.7006 ft
Minimum energy	0.6014 ft
Froude number	1.7582
Flow condition	Supercritical

Channel Calculator

Given Input Data:

Shape	Rectangular
Solving for	Depth of Flow
Flowrate	0.8800 cfs
Slope	0.0070 ft/ft
Manning's n	0.0130
Height	0.5000 ft
Bottom width	1.0000 ft

Computed Results:

Depth	0.2864 ft
Velocity	3.0725 fps
Full Flowrate	1.8977 cfs
Flow area	0.2864 ft2
Flow perimeter	1.5728 ft
Hydraulic radius	0.1821 ft
Top width	1.0000 ft
Area	0.5000 ft2
Perimeter	2.0000 ft
Percent full	57.2817 %

Critical Information

Critical depth	0.2887 ft
Critical slope	0.0068 ft/ft
Critical velocity	3.0479 fps
Critical area	0.2887 ft2
Critical perimeter	1.5775 ft
Critical hydraulic radius	0.1830 ft
Critical top width	1.0000 ft
Specific energy	0.4331 ft
Minimum energy	0.4331 ft
Froude number	1.0122
Flow condition	Supercritical

Channel Calculator

Given Input Data:

Shape	Trapezoidal
Solving for	Depth of Flow
Flowrate	0.2400 cfs
Slope	0.0200 ft/ft
Manning's n	0.0130
Height	0.5000 ft
Bottom width	0.0000 ft
Left slope	3.0000 ft/ft (V/H)
Right slope	0.0625 ft/ft (V/H)

Computed Results:

Depth	0.1128 ft
Velocity	2.3078 fps
Full Flowrate	12.7107 cfs
Flow area	0.1040 ft2
Flow perimeter	1.9280 ft
Hydraulic radius	0.0539 ft
Top width	1.8431 ft
Area	2.0417 ft2
Perimeter	8.5427 ft
Percent full	22.5692 %

Critical Information

Critical depth	0.1399 ft
Critical slope	0.0063 ft/ft
Critical velocity	1.5005 fps
Critical area	0.1600 ft2
Critical perimeter	2.3911 ft
Critical hydraulic radius	0.0669 ft
Critical top width	2.2858 ft
Specific energy	0.1956 ft
Minimum energy	0.2099 ft
Froude number	1.7128
Flow condition	Supercritical

PIPE DESIGN

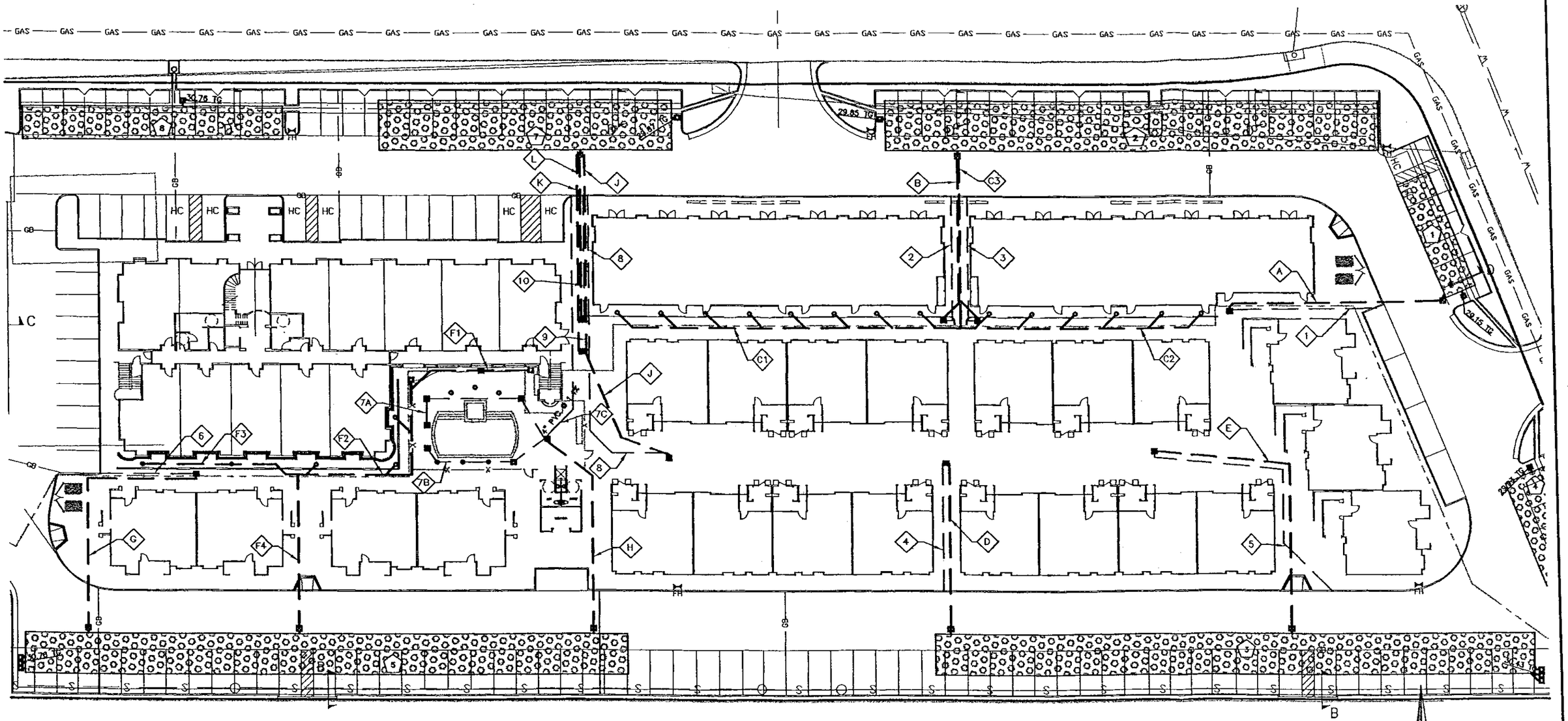

SAN DIEGUITO ENGINEERING, INC.

4407 MANCHESTER, SUITE 105
ENCINITAS, CA 92024
PHONE: (760) 753-5525

CIVIL ENGINEERING • PLANNING
LAND SURVEYING

SCALE 1" = 60'

U:1DATA\ENGINEERING\4200.02\DWG\4200_02HYDRO_MAP.DWG, SCALE:1"=60', DATE:12-5-02

SDE 4200.02

PIPE SIZING

TO CURB FACE

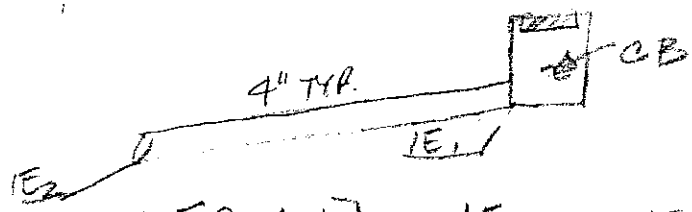

◇	L[ft]	S[ft/ft]	IE_1	IE_2	TG
1	59.6	0.0111	31.41	30.75	
2	53.7	0.0074	31.64	31.24	
3	53.9	0.0076	31.64	31.23	
4	52.7	0.0127	33.09	32.72	
5	111.7	0.0128	33.18	31.75	
6	38.1	0.0126	32.46	31.98	
7A	66.5	0.0101	33.09	32.42	
7B	52.6	0.0103	32.96	32.42	
7C	101.8	0.0094	32.42	31.46	33.69
8	129.7	0.0113	32.93	↓	33.60
9	65.3	0.0069	31.91	↓	32.58
10	50.8	0.0071	31.82	31.46	32.13

HYDRAULICS

4200.02 NEWPORT PACIFIC 2/6
PARKWAY GRADE
ABA

TO RS3 CHAMBER

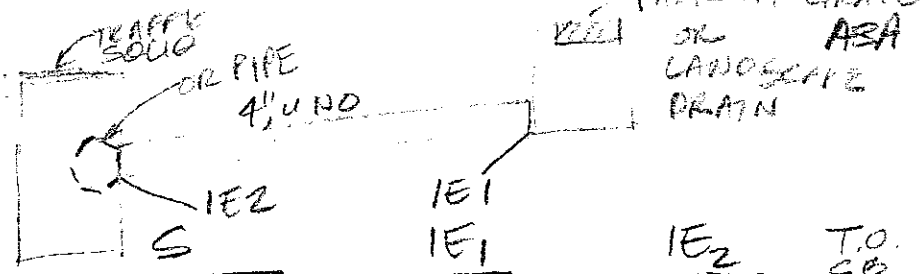

		L [ft]	S	IE_1	IE_2	T.O. CB
	A	86.3	0.0355	31.41	28.35	29.68
	B	67.2	0.0586	31.64	27.70	30.76
6"φ	C1	130.2	0.0200	30.9	28.30	L-32.10
6"φ	C2	91.9	0.0283	30.9	28.30	L-32.10
6"φ	C3	68.9	0.0087	28.30	27.70	30.72
	D	66.8	0.0398	33.09	30.43	32.43
	E	121.3	0.0281	33.18	29.77	31.77
6"φ	F1	49.6	0.0200	31.91	30.92	
6"φ	F2	84.1	0.0200	30.98 29.3	29.30	
	F3	63.9	0.0376	29.30	31.70	L-32.5
	F4	61.9	0.0141	28.43	29.30	31.9
	G	104.0	0.0281	32.46	29.54	31.[illegible]
	H	84.2	0.0227	32.42	30.51	32.5
6"	J	137.0	0.0297	32.93	28.86	30.8
6"	K	79.8	0.0382	31.91	28.86	30.8[illegible]
6"	L	65.2	0.0454	31.82	28.86	30.8[illegible]

3/6
ABA

FOR 7A-7B-7C PIPES:

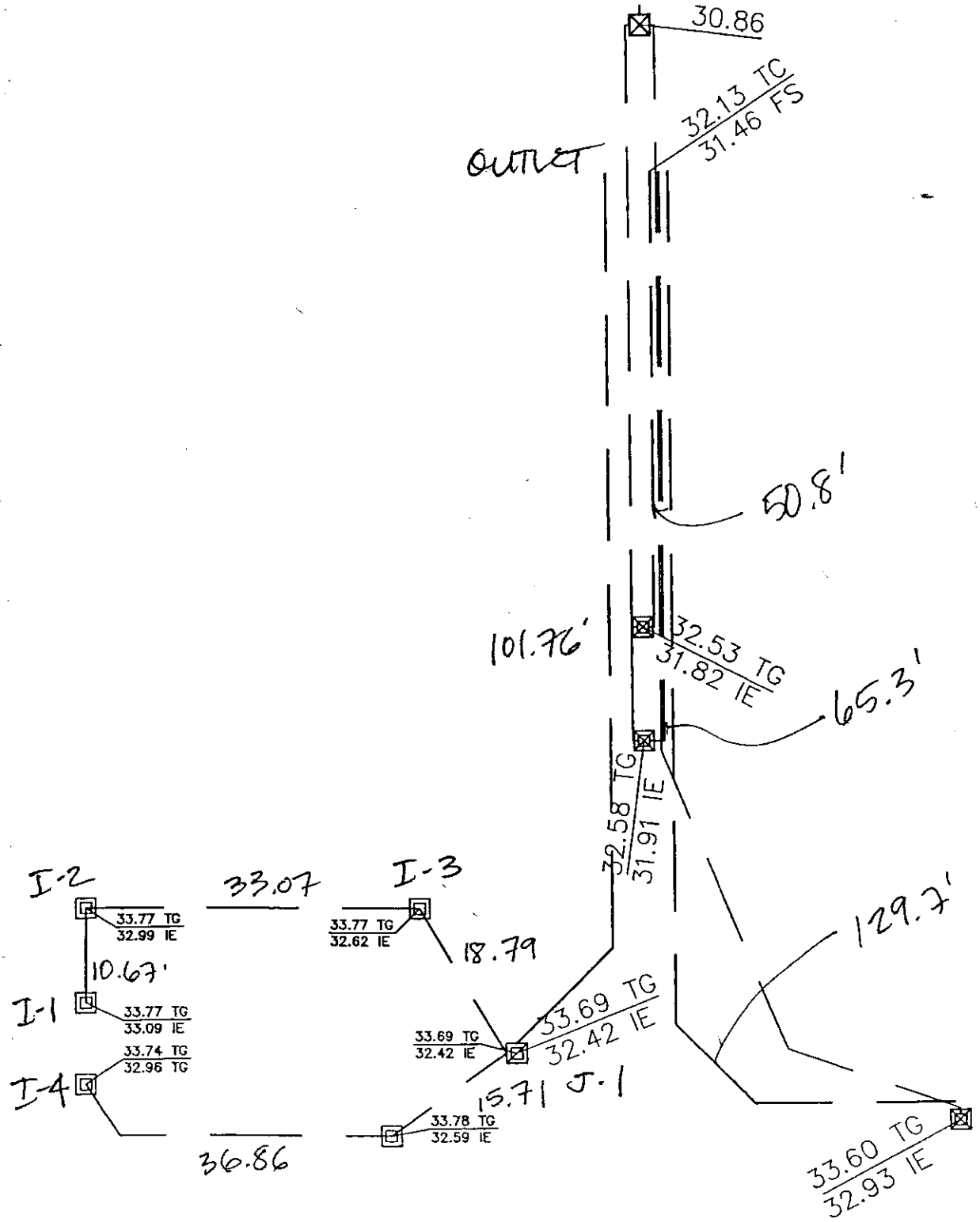

4/6
A&A

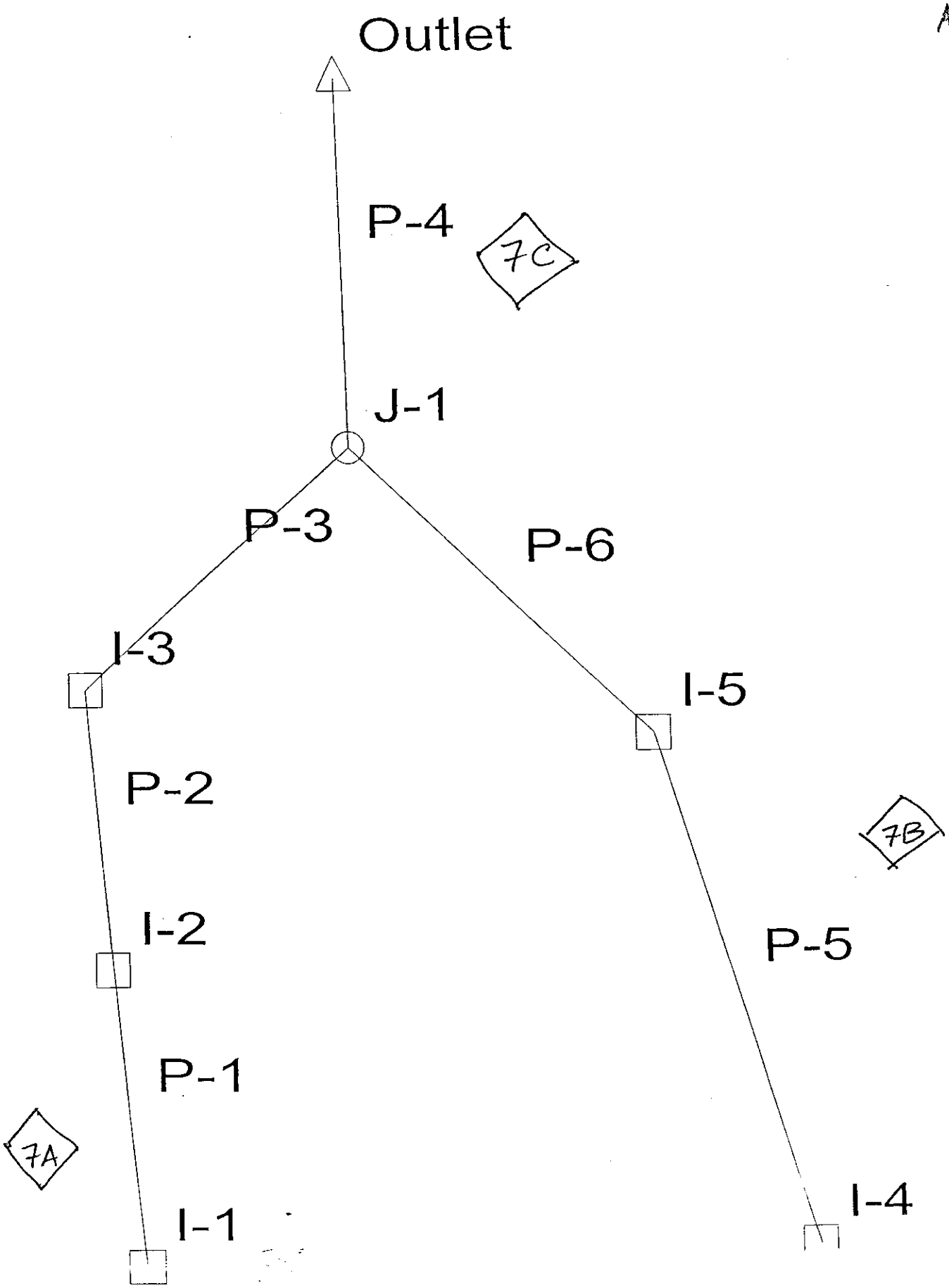

Project Title: 4200.02 NEWPORT PACIFIC
u:\1data\engineering\4200.02\stormcad\pipes-7a.stm
12/05/02 05:16:41 PM

San Dieguito Engineering
Haestad Methods, Inc. 37 Brookside Road Waterbury, CT 06708 (203) 755-1666

Project Engineer: San Dieguito Engineeing
StormCAD v1.0
Page 1 of 1

5/6
ASA

DOT Report

Pipe	-Node- Upstream Downstream	Inlet Area (acres)	Inlet CA (acres)	Total CA (acres)	-Ground- Upstream Downstream (ft)	-HGL- Upstream Downstream (ft)	-Slope- Energy Constructed (ft/ft)	-Section- Discharge Capacity (cfs)	-Section- Shape Size	Length (ft)	Average Velocity (ft/s)	Description
P-5	I-4	0.00	0.00	0.00	33.74	33.04	0.001150	0.04	Circular	36.86	0.71	
	I-5				33.78	33.02	0.010038	4.22	12 inch			
P-6	I-5	0.00	0.00	0.00	33.78	33.02	0.001083	0.07	Circular	15.71	0.85	
	J-1				33.69	33.00	0.010821	0.23	4 inch			
P-1	I-1	0.00	0.00	0.00	33.77	33.20	0.005207	0.04	Circular	10.67	1.21	
	I-2				33.77	33.17	0.009372	0.22	4 inch			
P-2	I-2	0.00	0.00	0.00	33.77	33.14	0.003943	0.08	Circular	33.07	1.42	
	I-3				33.77	33.06	0.011188	0.24	4 inch			
P-3	I-3	0.00	0.00	0.00	33.77	33.05	0.002569	0.11	Circular	18.79	1.31	
	J-1				33.69	33.00	0.010644	0.23	4 inch			
P-4	J-1	N/A	N/A	0.00	33.69	32.96	0.006988	0.19	Circular	101.76	2.15	
	Outlet				32.13	32.25	0.009434	0.22	4 inch			

6/6
ABA

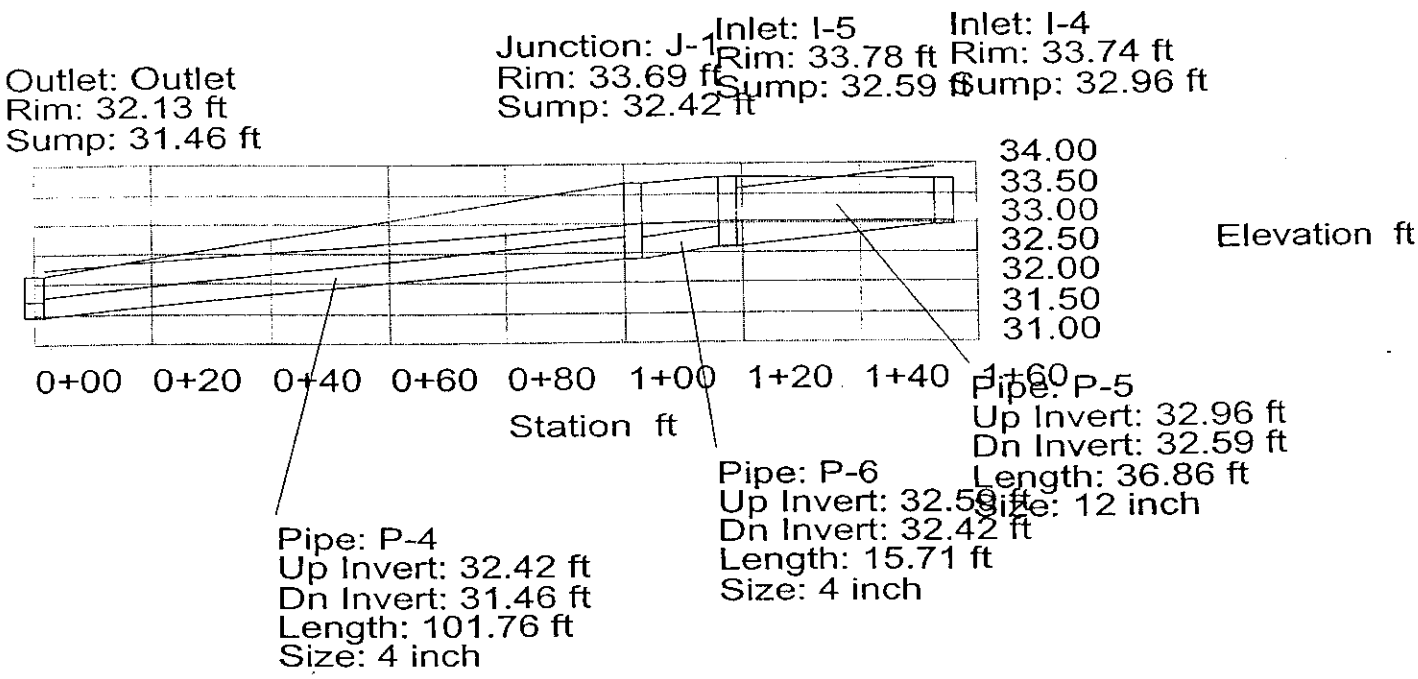
Outlet: Outlet
Rim: 32.13 ft
Sump: 31.46 ft
Junction: J-1
Rim: 33.69 ft
Sump: 32.42 ft
Inlet: I-5
Rim: 33.78 ft
Sump: 32.59 ft
Inlet: I-4
Rim: 33.74 ft
Sump: 32.96 ft
34.00
33.50
33.00
32.50
32.00
31.50
31.00
Elevation ft
0+00
0+20
0+40
0+60
0+80
1+00
1+20
1+40
1+60
Station ft
Pipe: P-5
Up Invert: 32.96 ft
Dn Invert: 32.59 ft
Length: 36.86 ft
Size: 12 inch
Pipe: P-6
Up Invert: 32.59 ft
Dn Invert: 32.42 ft
Length: 15.71 ft
Size: 4 inch
Pipe: P-4
Up Invert: 32.42 ft
Dn Invert: 31.46 ft
Length: 101.76 ft
Size: 4 inch

RAINSTORE 3 ™ DESIGN

RAINSTORE 3 SUMMARY

WATERSHED DESIGNATION	Volume [cf]	Total Volume Retained	Width [ft]	L max [ft]	Equiv. # of units	TOTAL # UNITS			RAINSTORE DESIGNATION
A1	415.36								
A2	831.52	1246.88	10	63	19	384	12x4x8	units	1
A3	n/a								
B1	63.52								
B2	0.00								
B3	953.62								
B4	n/a								
B5	1001.22	2018.37	18	198	60	612	51x6x2	units	2
C1	831.52								
C2	200.41								
C3	2756.39	3788.32	15	311	94	1155	77x5x3	units	3
C4	1185.47	1185.47	18	65	20	360	15x6x4	units	4
C5	n/a								
D1	Combined with D3, see D3								
D2	Combined with D3, see D3								
D3	1231.53								
D4	46.06								
D5	2232.75								
E2	76.77	3587.11	15	311	94	1095	73x5x3	units	5
D7	n/a								
D8	6375.02	6375.02	18	150	46	1968	41x6x8	units	6
E1	446.87								
E3	323.24								
E4	0.00								
E5	1478.00	2248.11	18	145	44	696	29x6x4	units	7
E6	n/a								
F1	892.94	892.94	13	108	33	276	23x4x3	units	8
F2	n/a								
					Grand Total:	6546 x $15/unit			

NOTE: Per Report No. 1 , dated October 4, 2002, prepared by SCS&T, Estimated Coefficient of Permeability ranges from 10^{-3} to 10^{-5} cm/sec.

10^{-3} cm/sec converts to 42.34 minutes/inch and 10^{-5} cm/sec converts to 4234 minutes/inch.

Rainstore^3 chambers are 40" x 40" (3.33' x 3.33'), each unit hold 25 gallons.

Per Report No. 1 (SCS&T JN 0411169), dated May 12, 2004, prepared by SCS&T, Infiltration Rates range from 13.5 to 58.5 inches/hour.

Qp for Post-development conditions, Area A1

P6 (in)	2.80
C	0.8
A (Ac.)	0.0514
Tc (min) raw	6
Tc (min) adj	6
N	60

SLICE	Time (min)	N	Pn (in)	Qn (cfs)	VOLn (cf)	TOT VOL (cf)
0	0		0.00	0.00	0.00	
1	6	59	0.02	0.01	1.25	1.25
2	12	57	0.02	0.01	2.53	3.78
3	18	55	0.02	0.01	2.58	6.36
4	24	53	0.02	0.01	2.65	9.01
5	30	51	0.02	0.01	2.71	11.72
6	36	49	0.02	0.01	2.78	14.50
7	42	47	0.02	0.01	2.86	17.36
8	48	45	0.02	0.01	2.94	20.30
9	54	43	0.02	0.01	3.02	23.32
10	60	41	0.02	0.01	3.12	26.44
11	66	39	0.02	0.01	3.22	29.66
12	72	37	0.02	0.01	3.33	32.99
13	78	35	0.02	0.01	3.45	36.44
14	84	33	0.02	0.01	3.58	40.02
15	90	31	0.03	0.01	3.73	43.75
16	96	29	0.03	0.01	3.89	47.63
17	102	27	0.03	0.01	4.07	51.70
18	108	25	0.03	0.01	4.27	55.97
19	114	23	0.03	0.01	4.50	60.48
20	120	21	0.03	0.01	4.77	65.25
21	126	19	0.04	0.01	5.08	70.33
22	132	17	0.04	0.02	5.45	75.78
23	138	15	0.04	0.02	5.90	81.68
24	144	13	0.05	0.02	6.45	88.13
25	150	11	0.05	0.02	7.16	95.29
26	156	9	0.06	0.02	8.12	103.41
27	162	7	0.07	0.03	9.50	112.91
28	168	5	0.09	0.04	11.70	124.61
29	174	3	0.13	0.05	16.16	140.77
30	180	1	0.66	0.27	58.16	198.93
31	186	2	0.18	0.08	62.09	261.02
32	192	4	0.10	0.04	21.25	282.27
33	198	6	0.08	0.03	13.46	295.73
34	204	8	0.06	0.03	10.45	306.18
35	210	10	0.05	0.02	8.74	314.92
36	216	12	0.05	0.02	7.60	322.52
37	222	14	0.04	0.02	6.78	329.30
38	228	16	0.04	0.02	6.16	335.46
39	234	18	0.04	0.02	5.66	341.13
40	240	20	0.03	0.01	5.26	346.38
41	246	22	0.03	0.01	4.92	351.30
42	252	24	0.03	0.01	4.63	355.94
43	258	26	0.03	0.01	4.38	360.32
44	264	28	0.03	0.01	4.17	364.49
45	270	30	0.03	0.01	3.98	368.46
46	276	32	0.03	0.01	3.80	372.27
47	282	34	0.02	0.01	3.65	375.92
48	288	36	0.02	0.01	3.51	379.43
49	294	38	0.02	0.01	3.39	382.82
50	300	40	0.02	0.01	3.27	386.09
51	306	42	0.02	0.01	3.17	389.26
52	312	44	0.02	0.01	3.07	392.33
53	318	46	0.02	0.01	2.98	395.31
54	324	48	0.02	0.01	2.90	398.21
55	330	50	0.02	0.01	2.82	401.03
56	336	52	0.02	0.01	2.75	403.77
57	342	54	0.02	0.01	2.68	406.45
58	348	56	0.02	0.01	2.62	409.07
59	354	58	0.02	0.01	2.56	411.62
60	360	60	0.02	0.01	2.50	414.12
			0.00	0.00	1.24	415.36

For Qp for Post-Development Conditions, Area B1

P6 (in)	2.80
C	0.8
A (Ac.)	0.0076
Tc (min) raw	6
Tc (min) adj	6
N	60

SLICE	Time (min)	N	Pn (in)	Qn (cfs)	VOLn (cf)	TOT VOL (cf)
0	0		0.00	0.00	0.00	
1	6	59	0.02	0.00	0.18	0.18
2	12	57	0.02	0.00	0.37	0.56
3	18	55	0.02	0.00	0.38	0.94
4	24	53	0.02	0.00	0.39	1.33
5	30	51	0.02	0.00	0.40	1.73
6	36	49	0.02	0.00	0.41	2.14
7	42	47	0.02	0.00	0.42	2.57
8	48	45	0.02	0.00	0.43	3.00
9	54	43	0.02	0.00	0.45	3.45
10	60	41	0.02	0.00	0.46	3.91
11	66	39	0.02	0.00	0.48	4.39
12	72	37	0.02	0.00	0.49	4.88
13	78	35	0.02	0.00	0.51	5.39
14	84	33	0.02	0.00	0.53	5.92
15	90	31	0.03	0.00	0.55	6.47
16	96	29	0.03	0.00	0.57	7.04
17	102	27	0.03	0.00	0.60	7.64
18	108	25	0.03	0.00	0.63	8.28
19	114	23	0.03	0.00	0.67	8.94
20	120	21	0.03	0.00	0.71	9.65
21	126	19	0.04	0.00	0.75	10.40
22	132	17	0.04	0.00	0.81	11.20
23	138	15	0.04	0.00	0.87	12.08
24	144	13	0.05	0.00	0.95	13.03
25	150	11	0.05	0.00	1.06	14.09
26	156	9	0.06	0.00	1.20	15.29
27	162	7	0.07	0.00	1.40	16.69
28	168	5	0.09	0.01	1.73	18.43
29	174	3	0.13	0.01	2.39	20.81
30	180	1	0.66	0.04	8.60	29.41
31	186	2	0.18	0.01	9.18	38.59
32	192	4	0.10	0.01	3.14	41.74
33	198	6	0.08	0.00	1.99	43.73
34	204	8	0.06	0.00	1.55	45.27
35	210	10	0.05	0.00	1.29	46.56
36	216	12	0.05	0.00	1.12	47.69
37	222	14	0.04	0.00	1.00	48.69
38	228	16	0.04	0.00	0.91	49.60
39	234	18	0.04	0.00	0.84	50.44
40	240	20	0.03	0.00	0.78	51.22
41	246	22	0.03	0.00	0.73	51.94
42	252	24	0.03	0.00	0.68	52.63
43	258	26	0.03	0.00	0.65	53.28
44	264	28	0.03	0.00	0.62	53.89
45	270	30	0.03	0.00	0.59	54.48
46	276	32	0.03	0.00	0.56	55.04
47	282	34	0.02	0.00	0.54	55.58
48	288	36	0.02	0.00	0.52	56.10
49	294	38	0.02	0.00	0.50	56.60
50	300	40	0.02	0.00	0.48	57.09
51	306	42	0.02	0.00	0.47	57.56
52	312	44	0.02	0.00	0.45	58.01
53	318	46	0.02	0.00	0.44	58.45
54	324	48	0.02	0.00	0.43	58.88
55	330	50	0.02	0.00	0.42	59.30
56	336	52	0.02	0.00	0.41	59.70
57	342	54	0.02	0.00	0.40	60.10
58	348	56	0.02	0.00	0.39	60.48
59	354	58	0.02	0.00	0.38	60.86
60	360	60	0.02	0.01	1.42	62.28
			0.00	0.00	1.24	63.52

Qp for Post-development conditions, Area C1

P6 (in)	2.80
C	0.8
A (Ac.)	0.1029
Tc (min) raw	6
Tc (min) adj	6
N	60

SLICE	Time (min)	N	Pn (in)	Qn (cfs)	VOLn (cf)	TOT VOL (cf)
0	0		0.00	0.00	0.00	
1	6	59	0.02	0.01	2.50	2.50
2	12	57	0.02	0.01	5.06	7.56
3	18	55	0.02	0.01	5.17	12.73
4	24	53	0.02	0.01	5.30	18.03
5	30	51	0.02	0.02	5.43	23.46
6	36	49	0.02	0.02	5.57	29.03
7	42	47	0.02	0.02	5.72	34.75
8	48	45	0.02	0.02	5.88	40.64
9	54	43	0.02	0.02	6.06	46.69
10	60	41	0.02	0.02	6.24	52.94
11	66	39	0.02	0.02	6.44	59.38
12	72	37	0.02	0.02	6.66	66.04
13	78	35	0.02	0.02	6.90	72.95
14	84	33	0.02	0.02	7.17	80.12
15	90	31	0.03	0.02	7.46	87.58
16	96	29	0.03	0.02	7.78	95.36
17	102	27	0.03	0.02	8.14	103.50
18	108	25	0.03	0.02	8.55	112.05
19	114	23	0.03	0.03	9.02	121.07
20	120	21	0.03	0.03	9.55	130.62
21	126	19	0.04	0.03	10.17	140.79
22	132	17	0.04	0.03	10.91	151.70
23	138	15	0.04	0.03	11.81	163.51
24	144	13	0.05	0.04	12.92	176.43
25	150	11	0.05	0.04	14.34	190.77
26	156	9	0.06	0.05	16.26	207.03
27	162	7	0.07	0.06	19.01	226.04
28	168	5	0.09	0.07	23.43	249.47
29	174	3	0.13	0.11	32.35	281.82
30	180	1	0.66	0.54	116.43	398.25
31	186	2	0.18	0.15	124.30	522.54
32	192	4	0.10	0.09	42.55	565.09
33	198	6	0.08	0.06	26.94	592.03
34	204	8	0.06	0.05	20.92	612.95
35	210	10	0.05	0.04	17.49	630.45
36	216	12	0.05	0.04	15.22	645.67
37	222	14	0.04	0.04	13.58	659.25
38	228	16	0.04	0.03	12.33	671.58
39	234	18	0.04	0.03	11.34	682.92
40	240	20	0.03	0.03	10.53	693.44
41	246	22	0.03	0.03	9.85	703.29
42	252	24	0.03	0.03	9.27	712.56
43	258	26	0.03	0.02	8.78	721.34
44	264	28	0.03	0.02	8.34	729.68
45	270	30	0.03	0.02	7.96	737.64
46	276	32	0.03	0.02	7.62	745.25
47	282	34	0.02	0.02	7.31	752.57
48	288	36	0.02	0.02	7.03	759.60
49	294	38	0.02	0.02	6.78	766.38
50	300	40	0.02	0.02	6.55	772.93
51	306	42	0.02	0.02	6.34	779.28
52	312	44	0.02	0.02	6.15	785.42
53	318	46	0.02	0.02	5.97	791.39
54	324	48	0.02	0.02	5.80	797.19
55	330	50	0.02	0.02	5.64	802.84
56	336	52	0.02	0.02	5.50	808.34
57	342	54	0.02	0.01	5.36	813.70
58	348	56	0.02	0.01	5.24	818.93
59	354	58	0.02	0.01	5.12	824.05
60	360	60	0.02	0.01	5.00	829.05
			0.00	0.00	2.47	831.52

Qp for Post-development conditions, Area C2

P6 (in)	2.80
C	0.8
A (Ac.)	0.0248
Tc (min) raw	6
Tc (min) adj	6
N	60

SLICE	Time (min)	N	Pn (in)	Qn (cfs)	VOLn (cf)	TOT VOL (cf)
0	0		0.00	0.00	0.00	
1	6	59	0.02	0.00	0.60	0.60
2	12	57	0.02	0.00	1.22	1.82
3	18	55	0.02	0.00	1.25	3.07
4	24	53	0.02	0.00	1.28	4.35
5	30	51	0.02	0.00	1.31	5.65
6	36	49	0.02	0.00	1.34	7.00
7	42	47	0.02	0.00	1.38	8.38
8	48	45	0.02	0.00	1.42	9.79
9	54	43	0.02	0.00	1.46	11.25
10	60	41	0.02	0.00	1.50	12.76
11	66	39	0.02	0.00	1.55	14.31
12	72	37	0.02	0.00	1.61	15.92
13	78	35	0.02	0.00	1.66	17.58
14	84	33	0.02	0.00	1.73	19.31
15	90	31	0.03	0.01	1.80	21.11
16	96	29	0.03	0.01	1.88	22.98
17	102	27	0.03	0.01	1.96	24.95
18	108	25	0.03	0.01	2.06	27.01
19	114	23	0.03	0.01	2.17	29.18
20	120	21	0.03	0.01	2.30	31.48
21	126	19	0.04	0.01	2.45	33.93
22	132	17	0.04	0.01	2.63	36.56
23	138	15	0.04	0.01	2.85	39.41
24	144	13	0.05	0.01	3.11	42.52
25	150	11	0.05	0.01	3.46	45.98
26	156	9	0.06	0.01	3.92	49.90
27	162	7	0.07	0.01	4.58	54.48
28	168	5	0.09	0.02	5.65	60.12
29	174	3	0.13	0.03	7.80	67.92
30	180	1	0.66	0.13	28.06	95.98
31	186	2	0.18	0.04	29.96	125.94
32	192	4	0.10	0.02	10.25	136.19
33	198	6	0.08	0.02	6.49	142.69
34	204	8	0.06	0.01	5.04	147.73
35	210	10	0.05	0.01	4.22	151.94
36	216	12	0.05	0.01	3.67	155.61
37	222	14	0.04	0.01	3.27	158.89
38	228	16	0.04	0.01	2.97	161.86
39	234	18	0.04	0.01	2.73	164.59
40	240	20	0.03	0.01	2.54	167.13
41	246	22	0.03	0.01	2.37	169.50
42	252	24	0.03	0.01	2.23	171.74
43	258	26	0.03	0.01	2.11	173.85
44	264	28	0.03	0.01	2.01	175.86
45	270	30	0.03	0.01	1.92	177.78
46	276	32	0.03	0.00	1.84	179.61
47	282	34	0.02	0.00	1.76	181.38
48	288	36	0.02	0.00	1.70	183.07
49	294	38	0.02	0.00	1.63	184.71
50	300	40	0.02	0.00	1.58	186.29
51	306	42	0.02	0.00	1.53	187.81
52	312	44	0.02	0.00	1.48	189.30
53	318	46	0.02	0.00	1.44	190.73
54	324	48	0.02	0.00	1.40	192.13
55	330	50	0.02	0.00	1.36	193.49
56	336	52	0.02	0.00	1.33	194.82
57	342	54	0.02	0.00	1.29	196.11
58	348	56	0.02	0.00	1.26	197.37
59	354	58	0.02	0.00	1.23	198.60
60	360	60	0.02	0.00	1.21	199.81
			0.00	0.00	0.60	200.41

Qp for Post-development conditions, Area D1/D2/D3

P6 (in)	2.80
C	0.8
A (Ac.)	0.1524
Tc (min) raw	6
Tc (min) adj	6
N	60

SLICE	Time (min)	N	Pn (in)	Qn (cfs)	VOLn (cf)	TOT VOL (cf)
0	0		0.00	0.00	0.00	
1	6	59	0.02	0.02	3.70	3.70
2	12	57	0.02	0.02	7.49	11.19
3	18	55	0.02	0.02	7.66	18.86
4	24	53	0.02	0.02	7.85	26.71
5	30	51	0.02	0.02	8.04	34.75
6	36	49	0.02	0.02	8.25	43.00
7	42	47	0.02	0.02	8.47	51.47
8	48	45	0.02	0.02	8.71	60.19
9	54	43	0.02	0.03	8.97	69.15
10	60	41	0.02	0.03	9.25	78.40
11	66	39	0.02	0.03	9.55	87.94
12	72	37	0.02	0.03	9.87	97.82
13	78	35	0.02	0.03	10.23	108.04
14	84	33	0.02	0.03	10.62	118.66
15	90	31	0.03	0.03	11.05	129.71
16	96	29	0.03	0.03	11.53	141.23
17	102	27	0.03	0.03	12.06	153.29
18	108	25	0.03	0.04	12.66	165.96
19	114	23	0.03	0.04	13.35	179.31
20	120	21	0.03	0.04	14.14	193.45
21	126	19	0.04	0.04	15.07	208.52
22	132	17	0.04	0.05	16.16	224.68
23	138	15	0.04	0.05	17.49	242.17
24	144	13	0.05	0.06	19.13	261.30
25	150	11	0.05	0.06	21.24	282.54
26	156	9	0.06	0.07	24.08	306.62
27	162	7	0.07	0.08	28.15	334.77
28	168	5	0.09	0.11	34.70	369.47
29	174	3	0.13	0.16	47.91	417.38
30	180	1	0.66	0.80	172.44	589.82
31	186	2	0.18	0.22	184.09	773.91
32	192	4	0.10	0.13	63.02	836.93
33	198	6	0.08	0.09	39.90	876.83
34	204	8	0.06	0.08	30.98	907.81
35	210	10	0.05	0.07	25.91	933.72
36	216	12	0.05	0.06	22.54	956.27
37	222	14	0.04	0.05	20.12	976.38
38	228	16	0.04	0.05	18.26	994.64
39	234	18	0.04	0.04	16.79	1011.43
40	240	20	0.03	0.04	15.59	1027.02
41	246	22	0.03	0.04	14.59	1041.61
42	252	24	0.03	0.04	13.73	1055.34
43	258	26	0.03	0.04	13.00	1068.34
44	264	28	0.03	0.03	12.35	1080.69
45	270	30	0.03	0.03	11.79	1092.48
46	276	32	0.03	0.03	11.28	1103.76
47	282	34	0.02	0.03	10.83	1114.59
48	288	36	0.02	0.03	10.42	1125.00
49	294	38	0.02	0.03	10.04	1135.05
50	300	40	0.02	0.03	9.70	1144.75
51	306	42	0.02	0.03	9.39	1154.14
52	312	44	0.02	0.02	9.10	1163.25
53	318	46	0.02	0.02	8.84	1172.09
54	324	48	0.02	0.02	8.59	1180.68
55	330	50	0.02	0.02	8.36	1189.04
56	336	52	0.02	0.02	8.15	1197.18
57	342	54	0.02	0.02	7.94	1205.13
58	348	56	0.02	0.02	7.75	1212.88
59	354	58	0.02	0.02	7.58	1220.46
60	360	60	0.02	0.02	7.41	1227.87
			0.00	0.00	3.66	1231.53

Qp for Post-development conditions, Area D4

P6 (in)	2.80
C	0.8
A (Ac.)	0.0057
Tc (min) raw	6
Tc (min) adj	6
N	60

SLICE	Time (min)	N	Pn (in)	Qn (cfs)	VOLn (cf)	TOT VOL (cf)
0	0		0.00	0.00	0.00	
1	6	59	0.02	0.00	0.14	0.14
2	12	57	0.02	0.00	0.28	0.42
3	18	55	0.02	0.00	0.29	0.71
4	24	53	0.02	0.00	0.29	1.00
5	30	51	0.02	0.00	0.30	1.30
6	36	49	0.02	0.00	0.31	1.61
7	42	47	0.02	0.00	0.32	1.93
8	48	45	0.02	0.00	0.33	2.25
9	54	43	0.02	0.00	0.34	2.59
10	60	41	0.02	0.00	0.35	2.93
11	66	39	0.02	0.00	0.36	3.29
12	72	37	0.02	0.00	0.37	3.66
13	78	35	0.02	0.00	0.38	4.04
14	84	33	0.02	0.00	0.40	4.44
15	90	31	0.03	0.00	0.41	4.85
16	96	29	0.03	0.00	0.43	5.28
17	102	27	0.03	0.00	0.45	5.73
18	108	25	0.03	0.00	0.47	6.21
19	114	23	0.03	0.00	0.50	6.71
20	120	21	0.03	0.00	0.53	7.24
21	126	19	0.04	0.00	0.56	7.80
22	132	17	0.04	0.00	0.60	8.40
23	138	15	0.04	0.00	0.65	9.06
24	144	13	0.05	0.00	0.72	9.77
25	150	11	0.05	0.00	0.79	10.57
26	156	9	0.06	0.00	0.90	11.47
27	162	7	0.07	0.00	1.05	12.52
28	168	5	0.09	0.00	1.30	13.82
29	174	3	0.13	0.01	1.79	15.61
30	180	1	0.66	0.03	6.45	22.06
31	186	2	0.18	0.01	6.89	28.95
32	192	4	0.10	0.00	2.36	31.30
33	198	6	0.08	0.00	1.49	32.79
34	204	8	0.06	0.00	1.16	33.95
35	210	10	0.05	0.00	0.97	34.92
36	216	12	0.05	0.00	0.84	35.77
37	222	14	0.04	0.00	0.75	36.52
38	228	16	0.04	0.00	0.68	37.20
39	234	18	0.04	0.00	0.63	37.83
40	240	20	0.03	0.00	0.58	38.41
41	246	22	0.03	0.00	0.55	38.96
42	252	24	0.03	0.00	0.51	39.47
43	258	26	0.03	0.00	0.49	39.96
44	264	28	0.03	0.00	0.46	40.42
45	270	30	0.03	0.00	0.44	40.86
46	276	32	0.03	0.00	0.42	41.28
47	282	34	0.02	0.00	0.40	41.69
48	288	36	0.02	0.00	0.39	42.08
49	294	38	0.02	0.00	0.38	42.45
50	300	40	0.02	0.00	0.36	42.82
51	306	42	0.02	0.00	0.35	43.17
52	312	44	0.02	0.00	0.34	43.51
53	318	46	0.02	0.00	0.33	43.84
54	324	48	0.02	0.00	0.32	44.16
55	330	50	0.02	0.00	0.31	44.47
56	336	52	0.02	0.00	0.30	44.78
57	342	54	0.02	0.00	0.30	45.07
58	348	56	0.02	0.00	0.29	45.36
59	354	58	0.02	0.00	0.28	45.65
60	360	60	0.02	0.00	0.28	45.92
			0.00	0.00	0.14	46.06

Qp for Post-development conditions, Area E1

P6 (in)	2.80
C	0.8
A (Ac.)	0.0553
Tc (min) raw	6
Tc (min) adj	6
N	60

SLICE	Time (min)	N	Pn (in)	Qn (cfs)	VOLn (cf)	TOT VOL (cf)
0	0		0.00	0.00	0.00	
1	6	59	0.02	0.01	1.34	1.34
2	12	57	0.02	0.01	2.72	4.06
3	18	55	0.02	0.01	2.78	6.84
4	24	53	0.02	0.01	2.85	9.69
5	30	51	0.02	0.01	2.92	12.61
6	36	49	0.02	0.01	2.99	15.60
7	42	47	0.02	0.01	3.07	18.68
8	48	45	0.02	0.01	3.16	21.84
9	54	43	0.02	0.01	3.25	25.09
10	60	41	0.02	0.01	3.35	28.45
11	66	39	0.02	0.01	3.46	31.91
12	72	37	0.02	0.01	3.58	35.49
13	78	35	0.02	0.01	3.71	39.20
14	84	33	0.02	0.01	3.85	43.06
15	90	31	0.03	0.01	4.01	47.07
16	96	29	0.03	0.01	4.18	51.25
17	102	27	0.03	0.01	4.38	55.62
18	108	25	0.03	0.01	4.60	60.22
19	114	23	0.03	0.01	4.84	65.06
20	120	21	0.03	0.01	5.13	70.20
21	126	19	0.04	0.02	5.47	75.66
22	132	17	0.04	0.02	5.86	81.53
23	138	15	0.04	0.02	6.35	87.87
24	144	13	0.05	0.02	6.94	94.82
25	150	11	0.05	0.02	7.71	102.52
26	156	9	0.06	0.03	8.74	111.26
27	162	7	0.07	0.03	10.22	121.47
28	168	5	0.09	0.04	12.59	134.07
29	174	3	0.13	0.06	17.38	151.45
30	180	1	0.66	0.29	62.57	214.02
31	186	2	0.18	0.08	66.80	280.82
32	192	4	0.10	0.05	22.87	303.69
33	198	6	0.08	0.03	14.48	318.17
34	204	8	0.06	0.03	11.24	329.41
35	210	10	0.05	0.02	9.40	338.81
36	216	12	0.05	0.02	8.18	346.99
37	222	14	0.04	0.02	7.30	354.29
38	228	16	0.04	0.02	6.63	360.92
39	234	18	0.04	0.02	6.09	367.01
40	240	20	0.03	0.02	5.66	372.67
41	246	22	0.03	0.01	5.29	377.96
42	252	24	0.03	0.01	4.98	382.94
43	258	26	0.03	0.01	4.72	387.66
44	264	28	0.03	0.01	4.48	392.14
45	270	30	0.03	0.01	4.28	396.42
46	276	32	0.03	0.01	4.09	400.51
47	282	34	0.02	0.01	3.93	404.44
48	288	36	0.02	0.01	3.78	408.22
49	294	38	0.02	0.01	3.64	411.86
50	300	40	0.02	0.01	3.52	415.39
51	306	42	0.02	0.01	3.41	418.79
52	312	44	0.02	0.01	3.30	422.10
53	318	46	0.02	0.01	3.21	425.30
54	324	48	0.02	0.01	3.12	428.42
55	330	50	0.02	0.01	3.03	431.46
56	336	52	0.02	0.01	2.96	434.41
57	342	54	0.02	0.01	2.88	437.29
58	348	56	0.02	0.01	2.81	440.11
59	354	58	0.02	0.01	2.75	442.86
60	360	60	0.02	0.01	2.69	445.54
			0.00	0.00	1.33	446.87

Qp for Post-development conditions, Area E2

P6 (in)	2.80
C	0.8
A (Ac.)	0.0095
Tc (min) raw	6
Tc (min) adj	6
N	60

SLICE	Time (min)	N	Pn (in)	Qn (cfs)	VOLn (cf)	TOT VOL (cf)
0	0		0.00	0.00	0.00	
1	6	59	0.02	0.00	0.23	0.23
2	12	57	0.02	0.00	0.47	0.70
3	18	55	0.02	0.00	0.48	1.18
4	24	53	0.02	0.00	0.49	1.66
5	30	51	0.02	0.00	0.50	2.17
6	36	49	0.02	0.00	0.51	2.68
7	42	47	0.02	0.00	0.53	3.21
8	48	45	0.02	0.00	0.54	3.75
9	54	43	0.02	0.00	0.56	4.31
10	60	41	0.02	0.00	0.58	4.89
11	66	39	0.02	0.00	0.60	5.48
12	72	37	0.02	0.00	0.62	6.10
13	78	35	0.02	0.00	0.64	6.73
14	84	33	0.02	0.00	0.66	7.40
15	90	31	0.03	0.00	0.69	8.09
16	96	29	0.03	0.00	0.72	8.80
17	102	27	0.03	0.00	0.75	9.56
18	108	25	0.03	0.00	0.79	10.35
19	114	23	0.03	0.00	0.83	11.18
20	120	21	0.03	0.00	0.88	12.06
21	126	19	0.04	0.00	0.94	13.00
22	132	17	0.04	0.00	1.01	14.01
23	138	15	0.04	0.00	1.09	15.10
24	144	13	0.05	0.00	1.19	16.29
25	150	11	0.05	0.00	1.32	17.61
26	156	9	0.06	0.00	1.50	19.11
27	162	7	0.07	0.01	1.75	20.87
28	168	5	0.09	0.01	2.16	23.03
29	174	3	0.13	0.01	2.99	26.02
30	180	1	0.66	0.05	10.75	36.77
31	186	2	0.18	0.01	11.48	48.24
32	192	4	0.10	0.01	3.93	52.17
33	198	6	0.08	0.01	2.49	54.66
34	204	8	0.06	0.00	1.93	56.59
35	210	10	0.05	0.00	1.62	58.20
36	216	12	0.05	0.00	1.41	59.61
37	222	14	0.04	0.00	1.25	60.86
38	228	16	0.04	0.00	1.14	62.00
39	234	18	0.04	0.00	1.05	63.05
40	240	20	0.03	0.00	0.97	64.02
41	246	22	0.03	0.00	0.91	64.93
42	252	24	0.03	0.00	0.86	65.79
43	258	26	0.03	0.00	0.81	66.60
44	264	28	0.03	0.00	0.77	67.37
45	270	30	0.03	0.00	0.73	68.10
46	276	32	0.03	0.00	0.70	68.80
47	282	34	0.02	0.00	0.67	69.48
48	288	36	0.02	0.00	0.65	70.13
49	294	38	0.02	0.00	0.63	70.75
50	300	40	0.02	0.00	0.60	71.36
51	306	42	0.02	0.00	0.59	71.94
52	312	44	0.02	0.00	0.57	72.51
53	318	46	0.02	0.00	0.55	73.06
54	324	48	0.02	0.00	0.54	73.60
55	330	50	0.02	0.00	0.52	74.12
56	336	52	0.02	0.00	0.51	74.63
57	342	54	0.02	0.00	0.50	75.12
58	348	56	0.02	0.00	0.48	75.61
59	354	58	0.02	0.00	0.47	76.08
60	360	60	0.02	0.00	0.46	76.54
			0.00	0.00	0.23	76.77

Qp for Post-development conditions, Area E3

P6 (in)	2.80
C	0.8
A (Ac.)	0.04
Tc (min) raw	6
Tc (min) adj	6
N	60

SLICE	Time (min)	N	Pn (in)	Qn (cfs)	VOLn (cf)	TOT VOL (cf)
0	0		0.00	0.00	0.00	
1	6	59	0.02	0.01	0.97	0.97
2	12	57	0.02	0.01	1.97	2.94
3	18	55	0.02	0.01	2.01	4.95
4	24	53	0.02	0.01	2.06	7.01
5	30	51	0.02	0.01	2.11	9.12
6	36	49	0.02	0.01	2.17	11.29
7	42	47	0.02	0.01	2.22	13.51
8	48	45	0.02	0.01	2.29	15.80
9	54	43	0.02	0.01	2.35	18.15
10	60	41	0.02	0.01	2.43	20.58
11	66	39	0.02	0.01	2.51	23.08
12	72	37	0.02	0.01	2.59	25.67
13	78	35	0.02	0.01	2.68	28.36
14	84	33	0.02	0.01	2.79	31.14
15	90	31	0.03	0.01	2.90	34.04
16	96	29	0.03	0.01	3.03	37.07
17	102	27	0.03	0.01	3.17	40.23
18	108	25	0.03	0.01	3.32	43.56
19	114	23	0.03	0.01	3.50	47.06
20	120	21	0.03	0.01	3.71	50.78
21	126	19	0.04	0.01	3.95	54.73
22	132	17	0.04	0.01	4.24	58.97
23	138	15	0.04	0.01	4.59	63.56
24	144	13	0.05	0.01	5.02	68.58
25	150	11	0.05	0.02	5.58	74.16
26	156	9	0.06	0.02	6.32	80.48
27	162	7	0.07	0.02	7.39	87.87
28	168	5	0.09	0.03	9.11	96.97
29	174	3	0.13	0.04	12.57	109.55
30	180	1	0.66	0.21	45.26	154.81
31	186	2	0.18	0.06	48.32	203.13
32	192	4	0.10	0.03	16.54	219.67
33	198	6	0.08	0.02	10.47	230.14
34	204	8	0.06	0.02	8.13	238.27
35	210	10	0.05	0.02	6.80	245.07
36	216	12	0.05	0.02	5.92	250.99
37	222	14	0.04	0.01	5.28	256.27
38	228	16	0.04	0.01	4.79	261.06
39	234	18	0.04	0.01	4.41	265.47
40	240	20	0.03	0.01	4.09	269.56
41	246	22	0.03	0.01	3.83	273.39
42	252	24	0.03	0.01	3.60	276.99
43	258	26	0.03	0.01	3.41	280.40
44	264	28	0.03	0.01	3.24	283.65
45	270	30	0.03	0.01	3.09	286.74
46	276	32	0.03	0.01	2.96	289.70
47	282	34	0.02	0.01	2.84	292.54
48	288	36	0.02	0.01	2.73	295.28
49	294	38	0.02	0.01	2.64	297.91
50	300	40	0.02	0.01	2.55	300.46
51	306	42	0.02	0.01	2.47	302.93
52	312	44	0.02	0.01	2.39	305.31
53	318	46	0.02	0.01	2.32	307.63
54	324	48	0.02	0.01	2.25	309.89
55	330	50	0.02	0.01	2.19	312.08
56	336	52	0.02	0.01	2.14	314.22
57	342	54	0.02	0.01	2.08	316.31
58	348	56	0.02	0.01	2.04	318.34
59	354	58	0.02	0.01	1.99	320.33
60	360	60	0.02	0.01	1.94	322.27
			0.00	0.00	0.96	323.24

Qp for Post-development conditions, Area A2

P6 (in)	2.80
C	0.8
A (Ac.)	0.1029
Tc (min) raw	6
Tc (min) adj	6
N	60

SLICE	Time (min)	N	Pn (in)	Qn (cfs)	VOLn (cf)	TOT VOL (cf)
0	0		0.00	0.00	0.00	
1	6	59	0.02	0.01	2.50	2.50
2	12	57	0.02	0.01	5.06	7.56
3	18	55	0.02	0.01	5.17	12.73
4	24	53	0.02	0.01	5.30	18.03
5	30	51	0.02	0.02	5.43	23.46
6	36	49	0.02	0.02	5.57	29.03
7	42	47	0.02	0.02	5.72	34.75
8	48	45	0.02	0.02	5.88	40.64
9	54	43	0.02	0.02	6.06	46.69
10	60	41	0.02	0.02	6.24	52.94
11	66	39	0.02	0.02	6.44	59.38
12	72	37	0.02	0.02	6.66	66.04
13	78	35	0.02	0.02	6.90	72.95
14	84	33	0.02	0.02	7.17	80.12
15	90	31	0.03	0.02	7.46	87.58
16	96	29	0.03	0.02	7.78	95.36
17	102	27	0.03	0.02	8.14	103.50
18	108	25	0.03	0.02	8.55	112.05
19	114	23	0.03	0.03	9.02	121.07
20	120	21	0.03	0.03	9.55	130.62
21	126	19	0.04	0.03	10.17	140.79
22	132	17	0.04	0.03	10.91	151.70
23	138	15	0.04	0.03	11.81	163.51
24	144	13	0.05	0.04	12.92	176.43
25	150	11	0.05	0.04	14.34	190.77
26	156	9	0.06	0.05	16.26	207.03
27	162	7	0.07	0.06	19.01	226.04
28	168	5	0.09	0.07	23.43	249.47
29	174	3	0.13	0.11	32.35	281.82
30	180	1	0.66	0.54	116.43	398.25
31	186	2	0.18	0.15	124.30	522.54
32	192	4	0.10	0.09	42.55	565.09
33	198	6	0.08	0.06	26.94	592.03
34	204	8	0.06	0.05	20.92	612.95
35	210	10	0.05	0.04	17.49	630.45
36	216	12	0.05	0.04	15.22	645.67
37	222	14	0.04	0.04	13.58	659.25
38	228	16	0.04	0.03	12.33	671.58
39	234	18	0.04	0.03	11.34	682.92
40	240	20	0.03	0.03	10.53	693.44
41	246	22	0.03	0.03	9.85	703.29
42	252	24	0.03	0.03	9.27	712.56
43	258	26	0.03	0.02	8.78	721.34
44	264	28	0.03	0.02	8.34	729.68
45	270	30	0.03	0.02	7.96	737.64
46	276	32	0.03	0.02	7.62	745.25
47	282	34	0.02	0.02	7.31	752.57
48	288	36	0.02	0.02	7.03	759.60
49	294	38	0.02	0.02	6.78	766.38
50	300	40	0.02	0.02	6.55	772.93
51	306	42	0.02	0.02	6.34	779.28
52	312	44	0.02	0.02	6.15	785.42
53	318	46	0.02	0.02	5.97	791.39
54	324	48	0.02	0.02	5.80	797.19
55	330	50	0.02	0.02	5.64	802.84
56	336	52	0.02	0.02	5.50	808.34
57	342	54	0.02	0.01	5.36	813.70
58	348	56	0.02	0.01	5.24	818.93
59	354	58	0.02	0.01	5.12	824.05
60	360	60	0.02	0.01	5.00	829.05
			0.00	0.00	2.47	831.52

For Qp for Post-Development Conditions, Area B3

P6 (in)	2.80
C	0.8
A (Ac.)	0.1181
Tc (min) raw	6
Tc (min) adj	6
N	60

SLICE	Time (min)	N	Pn (in)	Qn (cfs)	VOLn (cf)	TOT VOL (cf)
0	0		0.00	0.00	0.00	
1	6	59	0.02	0.02	2.87	2.87
2	12	57	0.02	0.02	5.80	8.67
3	18	55	0.02	0.02	5.94	14.61
4	24	53	0.02	0.02	6.08	20.69
5	30	51	0.02	0.02	6.23	26.93
6	36	49	0.02	0.02	6.39	33.32
7	42	47	0.02	0.02	6.57	39.89
8	48	45	0.02	0.02	6.75	46.64
9	54	43	0.02	0.02	6.95	53.59
10	60	41	0.02	0.02	7.16	60.75
11	66	39	0.02	0.02	7.40	68.15
12	72	37	0.02	0.02	7.65	75.80
13	78	35	0.02	0.02	7.92	83.73
14	84	33	0.02	0.02	8.23	91.95
15	90	31	0.03	0.02	8.56	100.51
16	96	29	0.03	0.03	8.93	109.45
17	102	27	0.03	0.03	9.35	118.79
18	108	25	0.03	0.03	9.81	128.61
19	114	23	0.03	0.03	10.35	138.95
20	120	21	0.03	0.03	10.96	149.91
21	126	19	0.04	0.03	11.68	161.59
22	132	17	0.04	0.04	12.52	174.11
23	138	15	0.04	0.04	13.55	187.66
24	144	13	0.05	0.04	14.83	202.49
25	150	11	0.05	0.05	16.46	218.95
26	156	9	0.06	0.06	18.66	237.61
27	162	7	0.07	0.07	21.82	259.42
28	168	5	0.09	0.08	26.89	286.32
29	174	3	0.13	0.12	37.13	323.45
30	180	1	0.66	0.62	133.63	457.07
31	186	2	0.18	0.17	142.66	599.73
32	192	4	0.10	0.10	48.83	648.57
33	198	6	0.08	0.07	30.92	679.49
34	204	8	0.06	0.06	24.01	703.50
35	210	10	0.05	0.05	20.08	723.57
36	216	12	0.05	0.05	17.47	741.04
37	222	14	0.04	0.04	15.59	756.63
38	228	16	0.04	0.04	14.15	770.78
39	234	18	0.04	0.03	13.01	783.80
40	240	20	0.03	0.03	12.08	795.88
41	246	22	0.03	0.03	11.30	807.18
42	252	24	0.03	0.03	10.64	817.82
43	258	26	0.03	0.03	10.07	827.89
44	264	28	0.03	0.03	9.57	837.47
45	270	30	0.03	0.02	9.13	846.60
46	276	32	0.03	0.02	8.74	855.34
47	282	34	0.02	0.02	8.39	863.73
48	288	36	0.02	0.02	8.07	871.80
49	294	38	0.02	0.02	7.78	879.59
50	300	40	0.02	0.02	7.52	887.11
51	306	42	0.02	0.02	7.28	894.39
52	312	44	0.02	0.02	7.06	901.44
53	318	46	0.02	0.02	6.85	908.29
54	324	48	0.02	0.02	6.66	914.95
55	330	50	0.02	0.02	6.48	921.43
56	336	52	0.02	0.02	6.31	927.74
57	342	54	0.02	0.02	6.16	933.89
58	348	56	0.02	0.02	6.01	939.90
59	354	58	0.02	0.02	5.87	945.77
60	360	60	0.02	0.01	5.38	951.15
			0.00	0.00	2.47	953.62

Qp for Post-development conditions, Area B5

P6 (in)	2.80
C	0.8
A (Ac.)	0.1239
Tc (min) raw	6
Tc (min) adj	6
N	60

SLICE	Time (min)	N	Pn (in)	Qn (cfs)	VOLn (cf)	TOT VOL (cf)
0	0		0.00	0.00	0.00	
1	6	59	0.02	0.02	3.01	3.01
2	12	57	0.02	0.02	6.09	9.10
3	18	55	0.02	0.02	6.23	15.33
4	24	53	0.02	0.02	6.38	21.71
5	30	51	0.02	0.02	6.54	28.25
6	36	49	0.02	0.02	6.71	34.96
7	42	47	0.02	0.02	6.89	41.85
8	48	45	0.02	0.02	7.08	48.93
9	54	43	0.02	0.02	7.29	56.22
10	60	41	0.02	0.02	7.52	63.74
11	66	39	0.02	0.02	7.76	71.50
12	72	37	0.02	0.02	8.02	79.52
13	78	35	0.02	0.02	8.31	87.84
14	84	33	0.02	0.02	8.63	96.47
15	90	31	0.03	0.03	8.98	105.45
16	96	29	0.03	0.03	9.37	114.82
17	102	27	0.03	0.03	9.81	124.63
18	108	25	0.03	0.03	10.30	134.92
19	114	23	0.03	0.03	10.85	145.78
20	120	21	0.03	0.03	11.50	157.28
21	126	19	0.04	0.04	12.25	169.53
22	132	17	0.04	0.04	13.14	182.66
23	138	15	0.04	0.04	14.22	196.88
24	144	13	0.05	0.05	15.55	212.43
25	150	11	0.05	0.05	17.27	229.70
26	156	9	0.06	0.06	19.57	249.28
27	162	7	0.07	0.07	22.89	272.17
28	168	5	0.09	0.09	28.21	300.38
29	174	3	0.13	0.13	38.95	339.33
30	180	1	0.66	0.65	140.19	479.52
31	186	2	0.18	0.18	149.67	629.19
32	192	4	0.10	0.10	51.23	680.42
33	198	6	0.08	0.08	32.44	712.86
34	204	8	0.06	0.06	25.19	738.04
35	210	10	0.05	0.05	21.06	759.11
36	216	12	0.05	0.05	18.33	777.44
37	222	14	0.04	0.04	16.35	793.79
38	228	16	0.04	0.04	14.85	808.64
39	234	18	0.04	0.04	13.65	822.29
40	240	20	0.03	0.03	12.67	834.96
41	246	22	0.03	0.03	11.86	846.82
42	252	24	0.03	0.03	11.16	857.99
43	258	26	0.03	0.03	10.57	868.55
44	264	28	0.03	0.03	10.04	878.60
45	270	30	0.03	0.03	9.58	888.18
46	276	32	0.03	0.02	9.17	897.35
47	282	34	0.02	0.02	8.80	906.15
48	288	36	0.02	0.02	8.47	914.62
49	294	38	0.02	0.02	8.17	922.79
50	300	40	0.02	0.02	7.89	930.67
51	306	42	0.02	0.02	7.64	938.31
52	312	44	0.02	0.02	7.40	945.71
53	318	46	0.02	0.02	7.19	952.90
54	324	48	0.02	0.02	6.98	959.88
55	330	50	0.02	0.02	6.80	966.68
56	336	52	0.02	0.02	6.62	973.30
57	342	54	0.02	0.02	6.46	979.76
58	348	56	0.02	0.02	6.30	986.06
59	354	58	0.02	0.02	6.16	992.22
60	360	60	0.02	0.02	6.02	998.25
			0.00	0.00	2.98	1001.22

Qp for Post-development conditions, Area C3

P6 (in)	2.80
C	0.8
A (Ac.)	0.3411
Tc (min) raw	6
Tc (min) adj	6
N	60

SLICE	Time (min)	N	Pn (in)	Qn (cfs)	VOLn (cf)	TOT VOL (cf)
0	0		0.00	0.00	0.00	
1	6	59	0.02	0.05	8.29	8.29
2	12	57	0.02	0.05	16.77	25.05
3	18	55	0.02	0.05	17.15	42.21
4	24	53	0.02	0.05	17.56	59.77
5	30	51	0.02	0.05	18.00	77.77
6	36	49	0.02	0.05	18.47	96.24
7	42	47	0.02	0.05	18.97	115.21
8	48	45	0.02	0.05	19.50	134.71
9	54	43	0.02	0.06	20.07	154.78
10	60	41	0.02	0.06	20.69	175.47
11	66	39	0.02	0.06	21.36	196.84
12	72	37	0.02	0.06	22.09	218.93
13	78	35	0.02	0.06	22.89	241.82
14	84	33	0.02	0.07	23.76	265.58
15	90	31	0.03	0.07	24.73	290.31
16	96	29	0.03	0.07	25.80	316.11
17	102	27	0.03	0.08	27.00	343.10
18	108	25	0.03	0.08	28.35	371.45
19	114	23	0.03	0.09	29.88	401.33
20	120	21	0.03	0.09	31.66	432.99
21	126	19	0.04	0.10	33.72	466.71
22	132	17	0.04	0.10	36.17	502.88
23	138	15	0.04	0.11	39.14	542.02
24	144	13	0.05	0.12	42.82	584.84
25	150	11	0.05	0.14	47.54	632.38
26	156	9	0.06	0.16	53.89	686.27
27	162	7	0.07	0.19	63.01	749.28
28	168	5	0.09	0.24	77.67	826.95
29	174	3	0.13	0.35	107.23	934.19
30	180	1	0.66	1.79	385.95	1320.13
31	186	2	0.18	0.50	412.03	1732.17
32	192	4	0.10	0.28	141.04	1873.21
33	198	6	0.08	0.21	89.30	1962.51
34	204	8	0.06	0.17	69.35	2031.86
35	210	10	0.05	0.15	57.99	2089.85
36	216	12	0.05	0.13	50.46	2140.30
37	222	14	0.04	0.12	45.02	2185.33
38	228	16	0.04	0.11	40.87	2226.20
39	234	18	0.04	0.10	37.58	2263.78
40	240	20	0.03	0.09	34.89	2298.67
41	246	22	0.03	0.09	32.65	2331.32
42	252	24	0.03	0.08	30.74	2362.06
43	258	26	0.03	0.08	29.09	2391.15
44	264	28	0.03	0.07	27.65	2418.80
45	270	30	0.03	0.07	26.38	2445.17
46	276	32	0.03	0.07	25.25	2470.42
47	282	34	0.02	0.07	24.23	2494.65
48	288	36	0.02	0.06	23.32	2517.97
49	294	38	0.02	0.06	22.48	2540.45
50	300	40	0.02	0.06	21.72	2562.17
51	306	42	0.02	0.06	21.02	2583.19
52	312	44	0.02	0.06	20.38	2603.57
53	318	46	0.02	0.05	19.78	2623.35
54	324	48	0.02	0.05	19.23	2642.58
55	330	50	0.02	0.05	18.71	2661.29
56	336	52	0.02	0.05	18.23	2679.52
57	342	54	0.02	0.05	17.78	2697.30
58	348	56	0.02	0.05	17.36	2714.66
59	354	58	0.02	0.05	16.96	2731.62
60	360	60	0.02	0.05	16.58	2748.20
			0.00	0.00	8.20	2756.39

Qp for Post-development conditions, Area C4

P6 (in)	2.80
C	0.8
A (Ac.)	0.1467
Tc (min) raw	6
Tc (min) adj	6
N	60

SLICE	Time (min)	N	Pn (in)	Qn (cfs)	VOLn (cf)	TOT VOL (cf)
0	0		0.00	0.00	0.00	
1	6	59	0.02	0.02	3.56	3.56
2	12	57	0.02	0.02	7.21	10.78
3	18	55	0.02	0.02	7.38	18.15
4	24	53	0.02	0.02	7.55	25.71
5	30	51	0.02	0.02	7.74	33.45
6	36	49	0.02	0.02	7.94	41.39
7	42	47	0.02	0.02	8.16	49.55
8	48	45	0.02	0.02	8.39	57.93
9	54	43	0.02	0.02	8.63	66.57
10	60	41	0.02	0.03	8.90	75.47
11	66	39	0.02	0.03	9.19	84.66
12	72	37	0.02	0.03	9.50	94.16
13	78	35	0.02	0.03	9.84	104.00
14	84	33	0.02	0.03	10.22	114.22
15	90	31	0.03	0.03	10.63	124.86
16	96	29	0.03	0.03	11.09	135.95
17	102	27	0.03	0.03	11.61	147.56
18	108	25	0.03	0.03	12.19	159.75
19	114	23	0.03	0.04	12.85	172.60
20	120	21	0.03	0.04	13.61	186.22
21	126	19	0.04	0.04	14.50	200.72
22	132	17	0.04	0.04	15.56	216.28
23	138	15	0.04	0.05	16.83	233.11
24	144	13	0.05	0.05	18.42	251.53
25	150	11	0.05	0.06	20.45	271.97
26	156	9	0.06	0.07	23.18	295.15
27	162	7	0.07	0.08	27.10	322.25
28	168	5	0.09	0.10	33.41	355.66
29	174	3	0.13	0.15	46.12	401.77
30	180	1	0.66	0.77	165.99	567.76
31	186	2	0.18	0.21	177.21	744.97
32	192	4	0.10	0.12	60.66	805.63
33	198	6	0.08	0.09	38.41	844.03
34	204	8	0.06	0.07	29.82	873.86
35	210	10	0.05	0.06	24.94	898.80
36	216	12	0.05	0.06	21.70	920.50
37	222	14	0.04	0.05	19.36	939.86
38	228	16	0.04	0.05	17.58	957.44
39	234	18	0.04	0.04	16.16	973.60
40	240	20	0.03	0.04	15.01	988.61
41	246	22	0.03	0.04	14.04	1002.65
42	252	24	0.03	0.04	13.22	1015.87
43	258	26	0.03	0.03	12.51	1028.38
44	264	28	0.03	0.03	11.89	1040.27
45	270	30	0.03	0.03	11.35	1051.62
46	276	32	0.03	0.03	10.86	1062.48
47	282	34	0.02	0.03	10.42	1072.90
48	288	36	0.02	0.03	10.03	1082.93
49	294	38	0.02	0.03	9.67	1092.60
50	300	40	0.02	0.03	9.34	1101.94
51	306	42	0.02	0.02	9.04	1110.98
52	312	44	0.02	0.02	8.76	1119.74
53	318	46	0.02	0.02	8.51	1128.25
54	324	48	0.02	0.02	8.27	1136.52
55	330	50	0.02	0.02	8.05	1144.57
56	336	52	0.02	0.02	7.84	1152.41
57	342	54	0.02	0.02	7.65	1160.05
58	348	56	0.02	0.02	7.46	1167.52
59	354	58	0.02	0.02	7.29	1174.81
60	360	60	0.02	0.02	7.13	1181.94
			0.00	0.00	3.53	1185.47

Qp for Post-development conditions, Area D5

P6 (in)	2.80
C	0.8
A (Ac.)	0.2763
Tc (min) raw	6
Tc (min) adj	6
N	60

SLICE	Time (min)	N	Pn (in)	Qn (cfs)	VOLn (cf)	TOT VOL (cf)
0	0		0.00	0.00	0.00	
1	6	59	0.02	0.04	6.71	6.71
2	12	57	0.02	0.04	13.58	20.29
3	18	55	0.02	0.04	13.89	34.19
4	24	53	0.02	0.04	14.23	48.42
5	30	51	0.02	0.04	14.58	63.00
6	36	49	0.02	0.04	14.96	77.96
7	42	47	0.02	0.04	15.36	93.32
8	48	45	0.02	0.04	15.80	109.11
9	54	43	0.02	0.05	16.26	125.38
10	60	41	0.02	0.05	16.76	142.14
11	66	39	0.02	0.05	17.31	159.44
12	72	37	0.02	0.05	17.90	177.34
13	78	35	0.02	0.05	18.54	195.88
14	84	33	0.02	0.05	19.25	215.13
15	90	31	0.03	0.06	20.03	235.16
16	96	29	0.03	0.06	20.90	256.05
17	102	27	0.03	0.06	21.87	277.92
18	108	25	0.03	0.07	22.96	300.88
19	114	23	0.03	0.07	24.21	325.09
20	120	21	0.03	0.07	25.64	350.73
21	126	19	0.04	0.08	27.32	378.05
22	132	17	0.04	0.08	29.30	407.35
23	138	15	0.04	0.09	31.70	439.05
24	144	13	0.05	0.10	34.68	473.73
25	150	11	0.05	0.11	38.51	512.24
26	156	9	0.06	0.13	43.65	555.89
27	162	7	0.07	0.15	51.04	606.94
28	168	5	0.09	0.20	62.92	669.85
29	174	3	0.13	0.29	86.86	756.72
30	180	1	0.66	1.45	312.63	1069.34
31	186	2	0.18	0.40	333.76	1403.10
32	192	4	0.10	0.23	114.25	1517.35
33	198	6	0.08	0.17	72.34	1589.68
34	204	8	0.06	0.14	56.17	1645.86
35	210	10	0.05	0.12	46.97	1692.83
36	216	12	0.05	0.11	40.87	1733.70
37	222	14	0.04	0.10	36.47	1770.17
38	228	16	0.04	0.09	33.11	1803.28
39	234	18	0.04	0.08	30.44	1833.72
40	240	20	0.03	0.08	28.26	1861.99
41	246	22	0.03	0.07	26.44	1888.43
42	252	24	0.03	0.07	24.90	1913.33
43	258	26	0.03	0.06	23.56	1936.89
44	264	28	0.03	0.06	22.40	1959.29
45	270	30	0.03	0.06	21.37	1980.66
46	276	32	0.03	0.06	20.45	2001.11
47	282	34	0.02	0.05	19.63	2020.74
48	288	36	0.02	0.05	18.89	2039.62
49	294	38	0.02	0.05	18.21	2057.83
50	300	40	0.02	0.05	17.59	2075.43
51	306	42	0.02	0.05	17.03	2092.46
52	312	44	0.02	0.05	16.51	2108.96
53	318	46	0.02	0.04	16.02	2124.99
54	324	48	0.02	0.04	15.58	2140.56
55	330	50	0.02	0.04	15.16	2155.72
56	336	52	0.02	0.04	14.77	2170.49
57	342	54	0.02	0.04	14.40	2184.89
58	348	56	0.02	0.04	14.06	2198.95
59	354	58	0.02	0.04	13.74	2212.68
60	360	60	0.02	0.04	13.43	2226.11
			0.00	0.00	6.64	2232.75

Qp for Post-development conditions, Area D8

P6 (in)	2.80
C	0.8
A (Ac.)	0.7889
Tc (min) raw	6
Tc (min) adj	6
N	60

SLICE	Time (min)	N	Pn (in)	Qn (cfs)	VOLn (cf)	TOT VOL (cf)
0	0		0.00	0.00	0.00	
1	6	59	0.02	0.11	19.17	19.17
2	12	57	0.02	0.11	38.78	57.95
3	18	55	0.02	0.11	39.67	97.62
4	24	53	0.02	0.11	40.62	138.24
5	30	51	0.02	0.12	41.63	179.87
6	36	49	0.02	0.12	42.71	222.58
7	42	47	0.02	0.12	43.86	266.45
8	48	45	0.02	0.13	45.10	311.55
9	54	43	0.02	0.13	46.43	357.98
10	60	41	0.02	0.14	47.86	405.84
11	66	39	0.02	0.14	49.41	455.25
12	72	37	0.02	0.14	51.10	506.34
13	78	35	0.02	0.15	52.94	559.28
14	84	33	0.02	0.16	54.96	614.24
15	90	31	0.03	0.16	57.19	671.43
16	96	29	0.03	0.17	59.66	731.09
17	102	27	0.03	0.18	62.43	793.53
18	108	25	0.03	0.19	65.56	859.09
19	114	23	0.03	0.20	69.12	928.20
20	120	21	0.03	0.21	73.21	1001.41
21	126	19	0.04	0.22	77.99	1079.41
22	132	17	0.04	0.24	83.66	1163.07
23	138	15	0.04	0.26	90.52	1253.59
24	144	13	0.05	0.29	99.03	1352.62
25	150	11	0.05	0.32	109.96	1462.58
26	156	9	0.06	0.37	124.63	1587.21
27	162	7	0.07	0.44	145.73	1732.94
28	168	5	0.09	0.56	179.65	1912.59
29	174	3	0.13	0.82	248.01	2160.60
30	180	1	0.66	4.14	892.62	3053.22
31	186	2	0.18	1.15	952.96	4006.17
32	192	4	0.10	0.66	326.20	4332.37
33	198	6	0.08	0.49	206.54	4538.92
34	204	8	0.06	0.40	160.39	4699.30
35	210	10	0.05	0.34	134.12	4833.42
36	216	12	0.05	0.30	116.70	4950.12
37	222	14	0.04	0.27	104.13	5054.25
38	228	16	0.04	0.25	94.53	5148.78
39	234	18	0.04	0.23	86.92	5235.70
40	240	20	0.03	0.22	80.70	5316.40
41	246	22	0.03	0.20	75.51	5391.90
42	252	24	0.03	0.19	71.09	5462.99
43	258	26	0.03	0.18	67.28	5530.27
44	264	28	0.03	0.17	63.95	5594.22
45	270	30	0.03	0.17	61.01	5655.23
46	276	32	0.03	0.16	58.39	5713.62
47	282	34	0.02	0.15	56.05	5769.67
48	288	36	0.02	0.15	53.92	5823.59
49	294	38	0.02	0.14	52.00	5875.59
50	300	40	0.02	0.14	50.24	5925.82
51	306	42	0.02	0.13	48.62	5974.44
52	312	44	0.02	0.13	47.13	6021.57
53	318	46	0.02	0.13	45.75	6067.32
54	324	48	0.02	0.12	44.47	6111.79
55	330	50	0.02	0.12	43.28	6155.07
56	336	52	0.02	0.12	42.16	6197.24
57	342	54	0.02	0.11	41.12	6238.36
58	348	56	0.02	0.11	40.14	6278.50
59	354	58	0.02	0.11	39.22	6317.71
60	360	60	0.02	0.11	38.35	6356.06
			0.00	0.00	18.96	6375.02

Qp for Post-development conditions, Area E5

P6 (in)	2.80
C	0.8
A (Ac.)	0.1829
Tc (min) raw	6
Tc (min) adj	6
N	60

SLICE	Time (min)	N	Pn (in)	Qn (cfs)	VOLn (cf)	TOT VOL (cf)
0	0		0.00	0.00	0.00	
1	6	59	0.02	0.02	4.44	4.44
2	12	57	0.02	0.03	8.99	13.43
3	18	55	0.02	0.03	9.20	22.63
4	24	53	0.02	0.03	9.42	32.05
5	30	51	0.02	0.03	9.65	41.70
6	36	49	0.02	0.03	9.90	51.60
7	42	47	0.02	0.03	10.17	61.77
8	48	45	0.02	0.03	10.46	72.23
9	54	43	0.02	0.03	10.76	82.99
10	60	41	0.02	0.03	11.10	94.09
11	66	39	0.02	0.03	11.46	105.55
12	72	37	0.02	0.03	11.85	117.39
13	78	35	0.02	0.03	12.27	129.66
14	84	33	0.02	0.04	12.74	142.41
15	90	31	0.03	0.04	13.26	155.66
16	96	29	0.03	0.04	13.83	169.50
17	102	27	0.03	0.04	14.48	183.97
18	108	25	0.03	0.04	15.20	199.17
19	114	23	0.03	0.05	16.02	215.20
20	120	21	0.03	0.05	16.97	232.17
21	126	19	0.04	0.05	18.08	250.25
22	132	17	0.04	0.06	19.40	269.65
23	138	15	0.04	0.06	20.99	290.63
24	144	13	0.05	0.07	22.96	313.59
25	150	11	0.05	0.07	25.49	339.09
26	156	9	0.06	0.09	28.89	367.98
27	162	7	0.07	0.10	33.79	401.77
28	168	5	0.09	0.13	41.65	443.42
29	174	3	0.13	0.19	57.50	500.92
30	180	1	0.66	0.96	206.95	707.86
31	186	2	0.18	0.27	220.94	928.80
32	192	4	0.10	0.15	75.63	1004.42
33	198	6	0.08	0.11	47.89	1052.31
34	204	8	0.06	0.09	37.18	1089.49
35	210	10	0.05	0.08	31.09	1120.59
36	216	12	0.05	0.07	27.06	1147.65
37	222	14	0.04	0.06	24.14	1171.79
38	228	16	0.04	0.06	21.92	1193.70
39	234	18	0.04	0.05	20.15	1213.85
40	240	20	0.03	0.05	18.71	1232.56
41	246	22	0.03	0.05	17.51	1250.07
42	252	24	0.03	0.04	16.48	1266.55
43	258	26	0.03	0.04	15.60	1282.15
44	264	28	0.03	0.04	14.83	1296.97
45	270	30	0.03	0.04	14.14	1311.12
46	276	32	0.03	0.04	13.54	1324.66
47	282	34	0.02	0.04	12.99	1337.65
48	288	36	0.02	0.03	12.50	1350.15
49	294	38	0.02	0.03	12.05	1362.21
50	300	40	0.02	0.03	11.65	1373.85
51	306	42	0.02	0.03	11.27	1385.13
52	312	44	0.02	0.03	10.93	1396.05
53	318	46	0.02	0.03	10.61	1406.66
54	324	48	0.02	0.03	10.31	1416.97
55	330	50	0.02	0.03	10.03	1427.00
56	336	52	0.02	0.03	9.78	1436.78
57	342	54	0.02	0.03	9.53	1446.31
58	348	56	0.02	0.03	9.31	1455.62
59	354	58	0.02	0.02	9.09	1464.71
60	360	60	0.02	0.02	8.89	1473.60
			0.00	0.00	4.40	1478.00

Qp for Post-development conditions, Area F1

P6 (in)	2.80
C	0.8
A (Ac.)	0.1105
Tc (min) raw	6
Tc (min) adj	6
N	60

SLICE	Time (min)	N	Pn (in)	Qn (cfs)	VOLn (cf)	TOT VOL (cf)
0	0		0.00	0.00	0.00	
1	6	59	0.02	0.01	2.69	2.69
2	12	57	0.02	0.02	5.43	8.12
3	18	55	0.02	0.02	5.56	13.67
4	24	53	0.02	0.02	5.69	19.36
5	30	51	0.02	0.02	5.83	25.19
6	36	49	0.02	0.02	5.98	31.18
7	42	47	0.02	0.02	6.14	37.32
8	48	45	0.02	0.02	6.32	43.64
9	54	43	0.02	0.02	6.50	50.14
10	60	41	0.02	0.02	6.70	56.84
11	66	39	0.02	0.02	6.92	63.77
12	72	37	0.02	0.02	7.16	70.92
13	78	35	0.02	0.02	7.41	78.34
14	84	33	0.02	0.02	7.70	86.04
15	90	31	0.03	0.02	8.01	94.05
16	96	29	0.03	0.02	8.36	102.40
17	102	27	0.03	0.02	8.75	111.15
18	108	25	0.03	0.03	9.18	120.33
19	114	23	0.03	0.03	9.68	130.01
20	120	21	0.03	0.03	10.25	140.27
21	126	19	0.04	0.03	10.92	151.19
22	132	17	0.04	0.03	11.72	162.91
23	138	15	0.04	0.04	12.68	175.59
24	144	13	0.05	0.04	13.87	189.46
25	150	11	0.05	0.05	15.40	204.86
26	156	9	0.06	0.05	17.46	222.32
27	162	7	0.07	0.06	20.41	242.73
28	168	5	0.09	0.08	25.16	267.89
29	174	3	0.13	0.11	34.74	302.63
30	180	1	0.66	0.58	125.03	427.66
31	186	2	0.18	0.16	133.48	561.14
32	192	4	0.10	0.09	45.69	606.83
33	198	6	0.08	0.07	28.93	635.76
34	204	8	0.06	0.06	22.46	658.22
35	210	10	0.05	0.05	18.79	677.01
36	216	12	0.05	0.04	16.35	693.36
37	222	14	0.04	0.04	14.58	707.94
38	228	16	0.04	0.04	13.24	721.18
39	234	18	0.04	0.03	12.17	733.36
40	240	20	0.03	0.03	11.30	744.66
41	246	22	0.03	0.03	10.58	755.24
42	252	24	0.03	0.03	9.96	765.19
43	258	26	0.03	0.03	9.42	774.62
44	264	28	0.03	0.02	8.96	783.57
45	270	30	0.03	0.02	8.55	792.12
46	276	32	0.03	0.02	8.18	800.30
47	282	34	0.02	0.02	7.85	808.15
48	288	36	0.02	0.02	7.55	815.70
49	294	38	0.02	0.02	7.28	822.98
50	300	40	0.02	0.02	7.04	830.02
51	306	42	0.02	0.02	6.81	836.83
52	312	44	0.02	0.02	6.60	843.43
53	318	46	0.02	0.02	6.41	849.84
54	324	48	0.02	0.02	6.23	856.07
55	330	50	0.02	0.02	6.06	862.13
56	336	52	0.02	0.02	5.91	868.04
57	342	54	0.02	0.02	5.76	873.80
58	348	56	0.02	0.02	5.62	879.42
59	354	58	0.02	0.02	5.49	884.91
60	360	60	0.02	0.01	5.37	890.28
			0.00	0.00	2.66	892.94

RAINSTORE CALC

Components: Rainstore³ Estimator

Project: **SDE 4200.02 Palma de la Reina** Type: **Retention or Detention**

To Store 1246.88 cubic feet of water... Requires a Minimum **376** RS3 Units

Your Site Configuration Unit Length **12** x Unit Width **4** x Unit Depth **8**

Total Rainstore³ Units Needed = **384**

Geotextile Fabric (8 oz) Needed =	**160** sq yds	**134** m^2
Geomembrane Liner (40 mil PVC)= *used mainly for capture and re-use	**0** sq yds	**0** m^2
Geogrid Needed =	**257** sq yds	**215** m^2
Excavated Volume Needed =	**153** cu yds	**117** m^3
Sand Backfill or Equal* = *Site soils may be used, check with soils engineer	**77** cu yds	**59** m^3
12 inches Cover (Porous Base Course) = *Cover varies from 12 to 36 inches	**26** cu yds	**20** m^3
Approx. Labor to Install System =	**8** man hours	

back

Up to 20% overpack have been included for some items above

*This is not a quote

next

RAINSTORE CALC

Components: Rainstore³ Estimator

Project: **SDE 4200.02 Palma de la Reina** Type: **Retention or Detention**

To Store 2018.37 cubic feet of water... Requires a Minimum **609** RS3 Units

Your Site Configuration Unit Length **51** x Unit Width **6** x Unit Depth **2**

Total Rainstore³ Units Needed = **612**

Geotextile Fabric (8 oz) Needed =	**835** sq yds	**698** m^2
Geomembrane Liner (40 mil PVC)= *used mainly for capture and re-use	**0** sq yds	**0** m^2
Geogrid Needed =	**1436** sq yds	**1201** m^2
Excavated Volume Needed =	**572** cu yds	**437** m^3
Sand Backfill or Equal* = *Site soils may be used, check with soils engineer	**347** cu yds	**265** m^3
12 inches Cover (Porous Base Course) = *Cover varies from 12 to 36 inches	**145** cu yds	**111** m^3
Approx. Labor to Install System =	**12** man hours	

back

Up to 21% savings have been calculated for some items above

*This is not a quote

next

RAINSTORE CALC

Components: Rainstore³ Estimator

Project: **SDE 4200.02 Palma de la Reina** Type: **Retention or Detention**

To Store 3788.32 cubic feet of water... Requires a Minimum **1142** RS3 Units

Your Site Configuration Unit Length **77** x Unit Width **5** x Unit Depth **3**

Total Rainstore³ Units Needed = **1155**

Geotextile Fabric (8 oz) Needed =	**1078** sq yds	**901** m^2
Geomembrane Liner (40 mil PVC)= *used mainly for capture and re-use	**0** sq yds	**0** m^2
Geogrid Needed =	**1847** sq yds	**1544** m^2
Excavated Volume Needed =	**795** cu yds	**608** m^3
Sand Backfill or Equal* = *Site soils may be used, check with soils engineer	**458** cu yds	**350** m^3
12 inches Cover (Porous Base Course) = *Cover varies from 12 to 36 inches	**187** cu yds	**143** m^3
Approx. Labor to Install System =	**23** man hours	

back

Up to 20% overages have been included for some items above. This is not a bid.

next

RAINSTORE CALC

Components: Rainstore³ Estimator

Project: **SDE 4200.02 Palma de la Reina** Type: **Retention or Detention**

To Store 1185.47 cubic feet of water... Requires a Minimum **358** RS3 Units

Your Site Configuration Unit Length **15** x Unit Width **6** x Unit Depth **4**

Total Rainstore³ Units Needed = **360**

Geotextile Fabric (8 oz) Needed =	**258** sq yds	**216** m^2
Geomembrane Liner (40 mil PVC)= *used mainly for capture and re-use	**0** sq yds	**0** m^2
Geogrid Needed =	**443** sq yds	**370** m^2
Excavated Volume Needed =	**205** cu yds	**157** m^3
Sand Backfill or Equal* = *Site soils may be used, check with soils engineer	**114** cu yds	**87** m^3
12 inches Cover (Porous Base Course) = *Cover varies from 12 to 36 inches	**44** cu yds	**34** m^3
Approx. Labor to Install System =	**7** man hours	

back

Up to 20% overages have been included in some items above. Where is not a factor

next

RAINSTORE CALC

Components:

Rainstore³ Estimator

Project: **SDE 4200.02 Palma de la Reina** Type: **Retention or Detention**

To Store 3587.11 cubic feet of water... Requires a Minimum **1081** RS3 Units

Your Site Configuration Unit Length **73** x Unit Width **5** x Unit Depth **3**

Total Rainstore³ Units Needed = **1095**

Geotextile Fabric (8 oz) Needed =	**1021** sq yds	**854** m^2
Geomembrane Liner (40 mil PVC)= *used mainly for capture and re-use	**0** sq yds	**0** m^2
Geogrid Needed =	**1752** sq yds	**1465** m^2
Excavated Volume Needed =	**755** cu yds	**577** m^3
Sand Backfill or Equal* = *Site soils may be used, check with soils engineer	**436** cu yds	**333** m^3
12 inches Cover (Porous Base Course) = *Cover varies from 12 to 36 inches	**177** cu yds	**135** m^3
Approx. Labor to Install System =	**22** man hours	

back

Up to 20% savings have been calculated in the items above

*This is not a quote

next

RAINSTORE 3 CALC!

Components: Rainstore³ Estimator

Project: **SDE 4200.02 Palma de la Reina** Type: **Retention or Detention**

To Store 6375.02 cubic feet of water... Requires a Minimum **1921** RS3 Units

Your Site Configuration Unit Length **41** x Unit Width **6** x Unit Depth **8**

Total Rainstore³ Units Needed = **1968**

Geotextile Fabric (8 oz) Needed =	**746** sq yds	**624** m^2
Geomembrane Liner (40 mil PVC)= *used mainly for capture and re-use	**0** sq yds	**0** m^2
Geogrid Needed =	**1160** sq yds	**970** m^2
Excavated Volume Needed =	**692** cu yds	**529** m^3
Sand Backfill or Equal* = *Site soils may be used, check with soils engineer	**317** cu yds	**242** m^3
12 inches Cover (Porous Base Course) = *Cover varies from 12 to 36 inches	**118** cu yds	**90** m^3
Approx. Labor to Install System =	**39** man hours	

back

Up to 24 hour times have been surround estimates above. This is not a quote

next

RAINSTORE CALC

Components: Rainstore³ Estimator

Project: **SDE 4200.02 Palma de la Reina** Type: **Retention or Detention**

To Store 892.94 cubic feet of water... Requires a Minimum **269** RS3 Units

Your Site Configuration Unit Length **23** x Unit Width **4** x Unit Depth **3**

Total Rainstore³ Units Needed = **276**

Geotextile Fabric (8 oz) Needed =	**263** sq yds	**220** m^2
Geomembrane Liner (40 mil PVC)= *used mainly for capture and re-use	**0** sq yds	**0** m^2
Geogrid Needed =	**474** sq yds	**396** m^2
Excavated Volume Needed =	**204** cu yds	**156** m^3
Sand Backfill or Equal* = *Site soils may be used, check with soils engineer	**119** cu yds	**91** m^3
12 inches Cover (Porous Base Course) = *Cover varies from 12 to 36 inches	**48** cu yds	**37** m^3
Approx. Labor to Install System =	**6** man hours	

back

Up to 20% overages have been calculated for some items above. This is not a quote.

next