ANDERSON

TPM 21155

APN 126- 080- 15

DRAINAGE STUDY

REGISTERED PROFESSIONAL ENGINEER
HADLEY JOHNSON
No. 14870
EXP 3-31-11
CIVIL
STATE OF CALIFORNIA

8/21/09

ANDERSON
TPM 21155
FLOOD PLAIN CALCULATIONS

NORTH EAST CORNER

AREA 97 + 11.5 = 108.5 ACRES

USE C = 0.36 WATERSHED L = 3950
WATERSHED H = 519.5 – 300 = 219.5
S = 5.5%

Q_{100} = 0.36(2.75)(108.5)

Q_{100} = 107.4 cfs Tc = 14 + 8 = 22

I_{100} = 2.75 IN/HR

CROSS SECTION AT NORTHEAST CORNER
TPM 21155

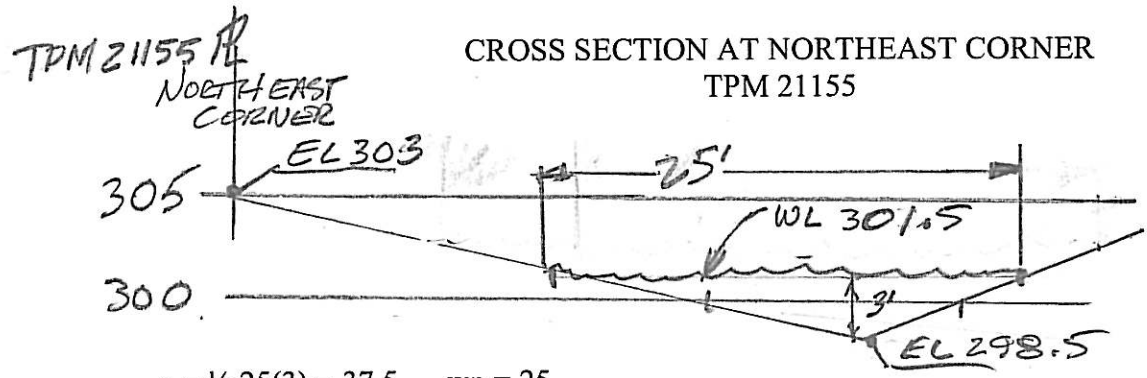

a = ½ 25(3) = 37.5 wp = 25

r = $\frac{37.5}{25}$ = 1.5 r 2/3 = 1.31

Use n = 0.50 & n = 0.075 S = 2 ½ %
S ½ = 0.158

Q = $\frac{1.486}{n}$ a r 2/3 S ½

Q = $\frac{1.486}{0.05}$ (37.5)(1.31)(0.158) =

Q = 230 cfs EXCEEDS 107 cfs

Q = $\frac{1.486}{0.075}$ (37.5)(1.31)(0.158)

Q = 153.8 cfs EXCEEDS 107 cfs

NO FLOOD PLAIN @ NORTH PROPERTY LINE

SOUTHEAST CORNER
TPM 21155

AREA 97 + 11.5 + 31 = 139.5 ACRES

C = 0.36

WATERSHED L = 4275
WATERSHED H = 519.5 – 290 = 229.5

S = 5.4%

Q_{100} = 0.36(2.70)(139.5)

Q_{100} = 135.6 cfs

Tc = 14.5 + 8 = 22.5

I_{100} = 2.70 IN/HR

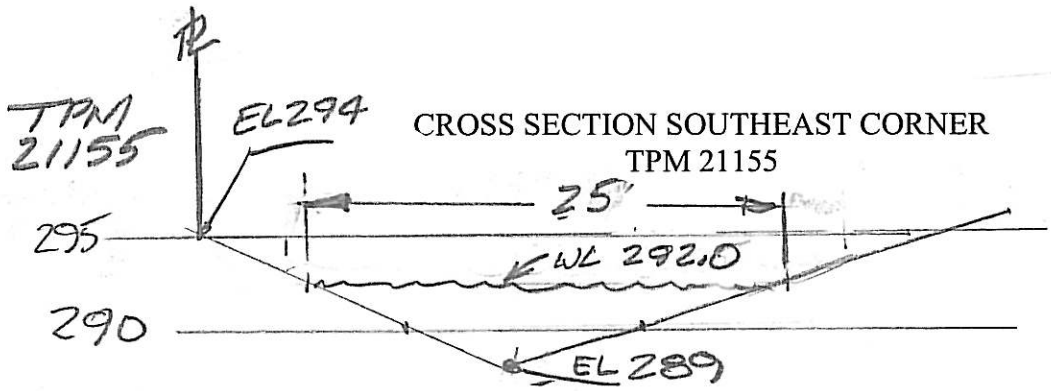

a = ½ b h =1/2 25(3) = 37.5 sq. ft.

wp = 25ft.

r = a/wp = 1.5 r 2/3 = 1.31

Use n = 0.05 & n = 0.075

S = 6 %
S ½ = 0.245

Q = 1.486/n a r 2/3 S ½

Q = 1.486/0.05 (37.5)(0.245)

Q = 357 cfs EXCEEDS 135.6 cfs

Q = 1.486/0.05 (37.5)(0.245)

Q = 238 cfs EXCEEDS 135.6 cfs

∴ NO FLOOD PLAIN ON PROPERTY

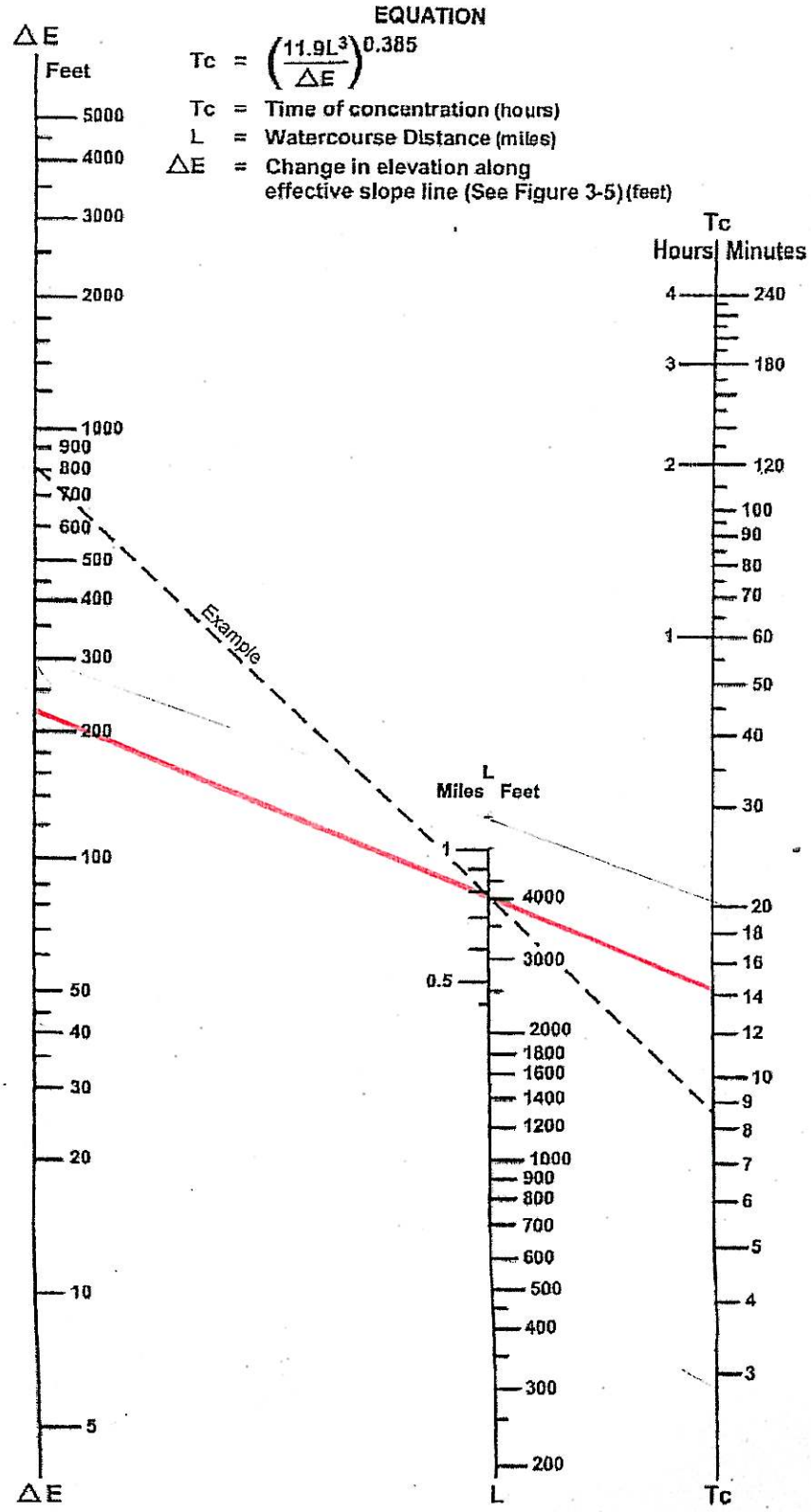

SOURCE: California Division of Highways (1941) and Kirpich (1940)

FIGURE

3-4

Nomograph for Determination of
Time of Concentration (Tc) or Travel Time (Tt) for Natural Watersheds

Note that the Initial Time of Concentration should be reflective of the general land-use at the upstream end of a drainage basin. A single lot with an area of two or less acres does not have a significant effect where the drainage basin area is 20 to 600 acres.

Table 3-2 provides limits of the length (Maximum Length (L_M)) of sheet flow to be used in hydrology studies. Initial T_i values based on average C values for the Land Use Element are also included. These values can be used in planning and design applications as described below. Exceptions may be approved by the "Regulating Agency" when submitted with a detailed study.

Table 3-2

MAXIMUM OVERLAND FLOW LENGTH (L_M)
& INITIAL TIME OF CONCENTRATION (T_i)

Element*	DU/	.5%		1%		2%		3%		5%		10%	
	Acre	L_M	T_i	L_M	T_i	L_M	T_i	L_M	T_i	L_M	T_i	L_M	T_i
Natural		50	13.2	70	12.5	85	10.9	100	10.3	100	8.7	100	6.9
LDR	1	50	12.2	70	11.5	85	10.0	100	9.5	100	8.0	100	6.4
LDR	2	50	11.3	70	10.5	85	9.2	100	8.8	100	7.4	100	5.8
LDR	2.9	50	10.7	70	10.0	85	8.8	95	8.1	100	7.0	100	5.6
MDR	4.3	50	10.2	70	9.6	80	8.1	95	7.8	100	6.7	100	5.3
MDR	7.3	50	9.2	65	8.4	80	7.4	95	7.0	100	6.0	100	4.8
MDR	10.9	50	8.7	65	7.9	80	6.9	90	6.4	100	5.7	100	4.5
MDR	14.5	50	8.2	65	7.4	80	6.5	90	6.0	100	5.4	100	4.3
HDR	24	50	6.7	65	6.1	75	5.1	90	4.9	95	4.3	100	3.5
HDR	43	50	5.3	65	4.7	75	4.0	85	3.8	95	3.4	100	2.7
N. Com		50	5.3	60	4.5	75	4.0	85	3.8	95	3.4	100	2.7
G. Com		50	4.7	60	4.1	75	3.6	85	3.4	90	2.9	100	2.4
O.P./Com		50	4.2	60	3.7	70	3.1	80	2.9	90	2.6	100	2.2
Limited I.		50	4.2	60	3.7	70	3.1	80	2.9	90	2.6	100	2.2
General I.		50	3.7	60	3.2	70	2.7	80	2.6	90	2.3	100	1.9

*See Table 3-1 for more detailed description

Table 3-1
RUNOFF COEFFICIENTS FOR URBAN AREAS

Land Use		Runoff Coefficient "C"				
			Soil Type			
NRCS Elements	County Elements	% IMPER.	A	B	C	D
Undisturbed Natural Terrain (Natural)	Permanent Open Space	0*	0.20	0.25	0.30	0.35
Low Density Residential (LDR)	Residential, 1.0 DU/A or less	10	0.27	0.32	0.36	0.41
Low Density Residential (LDR)	Residential, 2.0 DU/A or less	20	0.34	0.38	0.42	0.46
Low Density Residential (LDR)	Residential, 2.9 DU/A or less	25	0.38	0.41	0.45	0.49
Medium Density Residential (MDR)	Residential, 4.3 DU/A or less	30	0.41	0.45	0.48	0.52
Medium Density Residential (MDR)	Residential, 7.3 DU/A or less	40	0.48	0.51	0.54	0.57
Medium Density Residential (MDR)	Residential, 10.9 DU/A or less	45	0.52	0.54	0.57	0.60
Medium Density Residential (MDR)	Residential, 14.5 DU/A or less	50	0.55	0.58	0.60	0.63
High Density Residential (HDR)	Residential, 24.0 DU/A or less	65	0.66	0.67	0.69	0.71
High Density Residential (HDR)	Residential, 43.0 DU/A or less	80	0.76	0.77	0.78	0.79
Commercial/Industrial (N. Com)	Neighborhood Commercial	80	0.76	0.77	0.78	0.79
Commercial/Industrial (G. Com)	General Commercial	85	0.80	0.80	0.81	0.82
Commercial/Industrial (O.P. Com)	Office Professional/Commercial	90	0.83	0.84	0.84	0.85
Commercial/Industrial (Limited I.)	Limited Industrial	90	0.83	0.84	0.84	0.85
Commercial/Industrial (General I.)	General Industrial	95	0.87	0.87	0.87	0.87

*The values associated with 0% impervious may be used for direct calculation of the runoff coefficient as described in Section 3.1.2 (representing the pervious runoff coefficient, Cp, for the soil type), or for areas that will remain undisturbed in perpetuity. Justification must be given that the area will remain natural forever (e.g., the area is located in Cleveland National Forest).
DU/A = dwelling units per acre
NRCS = National Resources Conservation Service

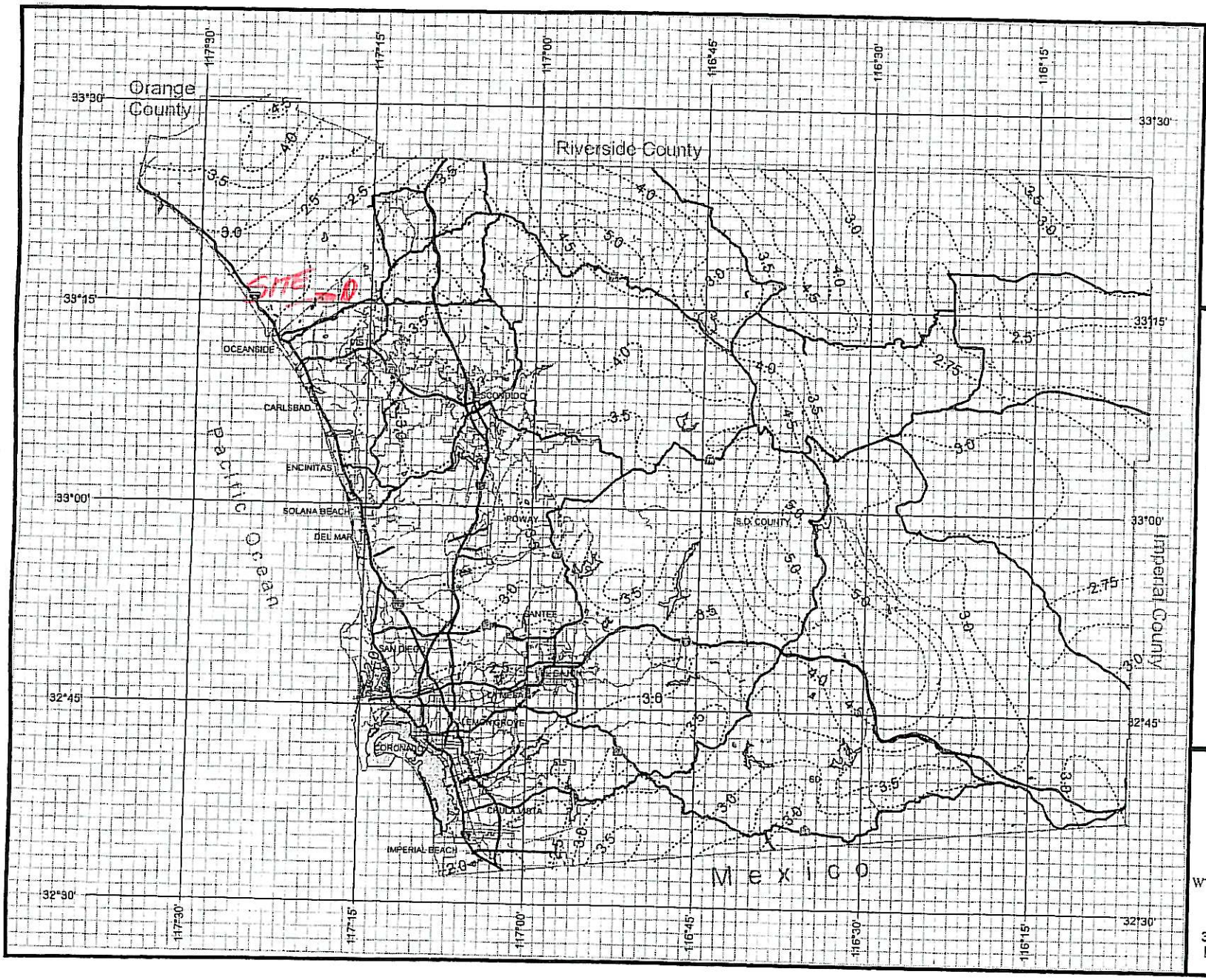

County of San Diego Hydrology Manual

Rainfall Isopluvials

100 Year Rainfall Event - 6 Hours

Isopluvial (inches)

DPW GIS

SanGIS
We Have San Diego Covered!

N
W E
S

3 0 3 Miles

THIS MAP IS PROVIDED WITHOUT WARRANTY OF ANY KIND, EITHER EXPRESS OR IMPLIED, INCLUDING, BUT NOT LIMITED TO, THE IMPLIED WARRANTIES OF MERCHANTABILITY AND FITNESS FOR A PARTICULAR PURPOSE. Copyright SanGIS. All Rights Reserved.

This products may contain information from the SANDAG Regional Information System which cannot be reproduced without the written permission of SANDAG.

This product may contain information which has been reproduced with permission granted by Thomas Brothers Maps.

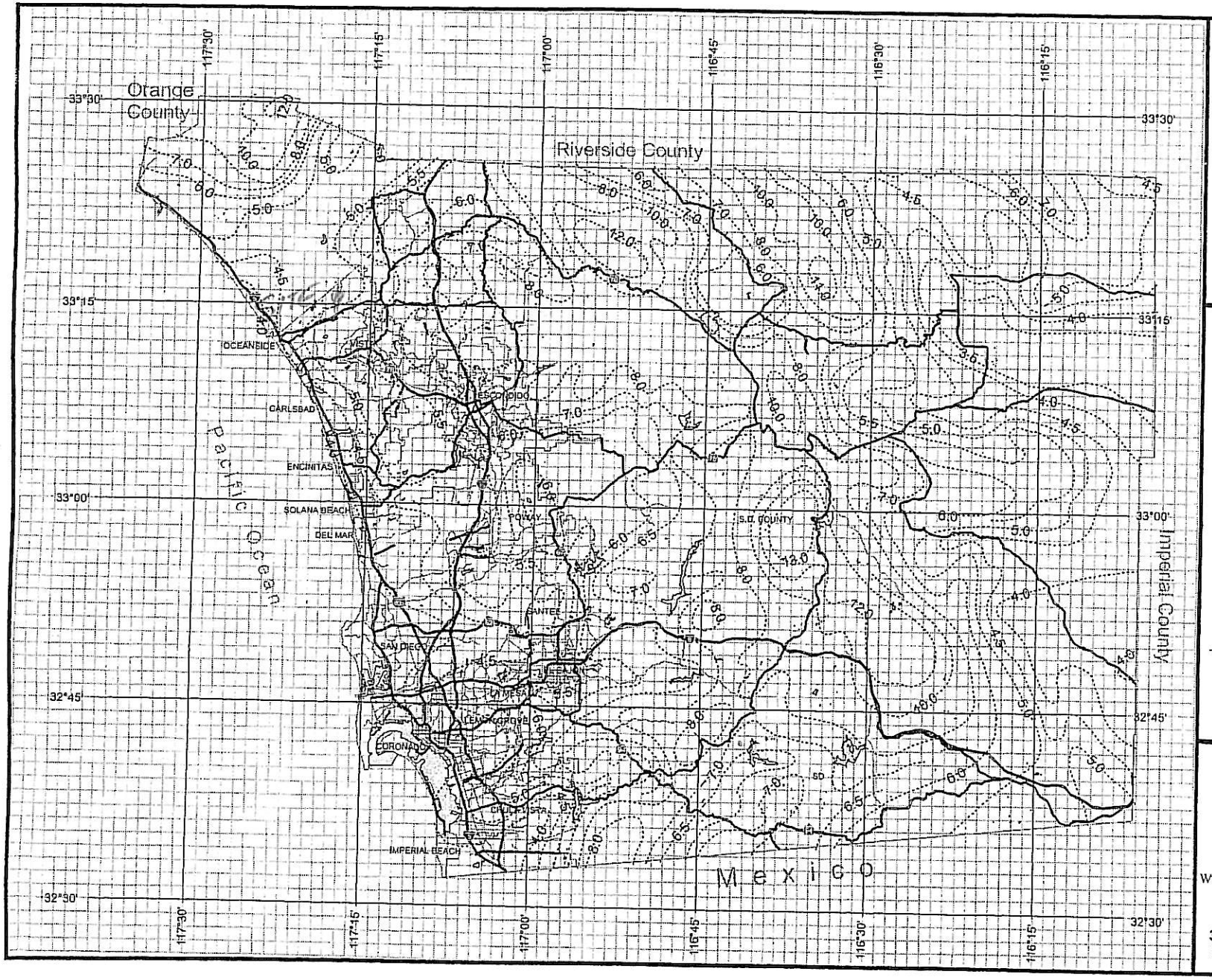

County of San Diego Hydrology Manual

Rainfall Isopluvials

100 Year Rainfall Event - 24 Hours

Isopluvial (inches)

DPW GIS

SanGIS We Have San Diego Covered!

N W E S

3 0 3 Miles

THIS MAP IS PROVIDED WITHOUT WARRANTY OF ANY KIND, EITHER EXPRESS OR IMPLIED, INCLUDING, BUT NOT LIMITED TO, THE IMPLIED WARRANTIES OF MERCHANTABILITY AND FITNESS FOR A PARTICULAR PURPOSE. Copyright SanGIS. All Rights Reserved.

This products may contain information from the SANDAG Regional Information System which cannot be reproduced without the written permission of SANDAG.

This product may contain information which has been reproduced with permission granted by Thomas Brothers Maps.

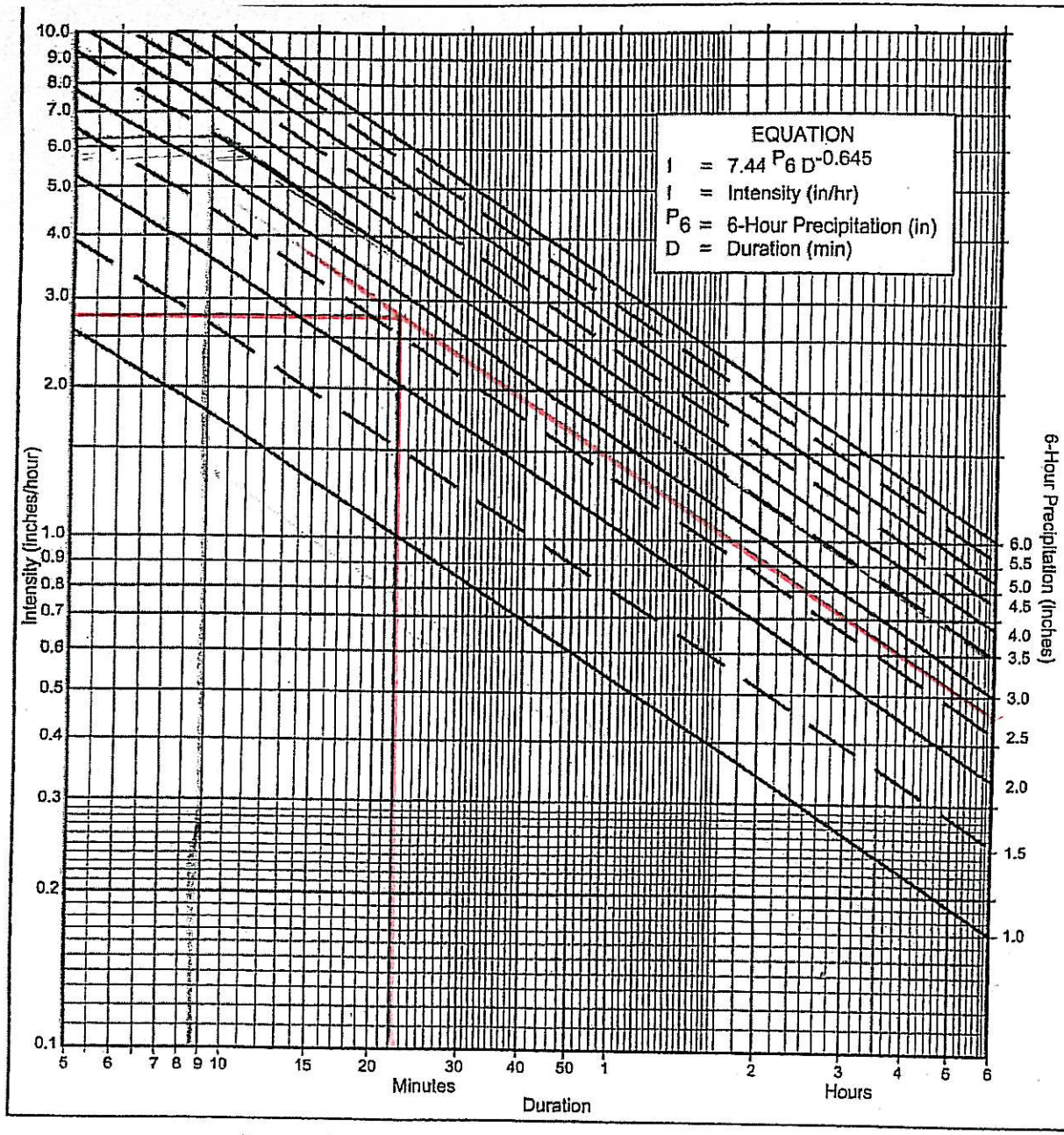

Directions for Application:

(1) From precipitation maps determine 6 hr and 24 hr amounts for the selected frequency. These maps are included in the County Hydrology Manual (10, 50, and 100 yr maps included in the Design and Procedure Manual).

(2) Adjust 6 hr precipitation (if necessary) so that it is within the range of 45% to 65% of the 24 hr precipitation (not applicaple to Desert).

(3) Plot 6 hr precipitation on the right side of the chart.

(4) Draw a line through the point parallel to the plotted lines.

(5) This line is the intensity-duration curve for the location being analyzed.

Application Form:

(a) Selected frequency 100 year

(b) P_6 = 2.75 in., P_{24} = 6.0, $\frac{P_6}{P_{24}}$ = 46 %(2)

(c) Adjusted P_6(2) = 2.75 in.

(d) t_x = 22 min.

(e) I = 2.75 in./hr.

Note: This chart replaces the Intensity-Duration-Frequency curves used since 1965.

P6	1	1.5	2	2.5	3	3.5	4	4.5	5	5.5	6
Duration	I	I	I	I	I	I	I	I	I	I	I
5	2.63	3.95	5.27	6.59	7.90	9.22	10.54	11.86	13.17	14.49	15.81
7	2.12	3.18	4.24	5.30	6.36	7.42	8.48	9.54	10.60	11.66	12.72
10	1.68	2.53	3.37	4.21	5.05	5.90	6.74	7.58	8.42	9.27	10.11
15	1.30	1.95	2.59	3.24	3.89	4.54	5.19	5.84	6.49	7.13	7.78
20	1.08	1.62	2.15	2.69	3.23	3.77	4.31	4.85	5.39	5.93	6.46
25	0.93	1.40	1.87	2.33	2.80	3.27	3.73	4.20	4.67	5.13	5.60
30	0.83	1.24	1.66	2.07	2.49	2.90	3.32	3.73	4.15	4.56	4.98
40	0.69	1.03	1.38	1.72	2.07	2.41	2.76	3.10	3.45	3.79	4.13
50	0.60	0.90	1.19	1.49	1.79	2.09	2.39	2.69	2.98	3.28	3.58
60	0.53	0.80	1.06	1.33	1.59	1.86	2.12	2.39	2.65	2.92	3.18
90	0.41	0.61	0.82	1.02	1.23	1.43	1.63	1.84	2.04	2.25	2.45
120	0.34	0.51	0.68	0.85	1.02	1.19	1.36	1.53	1.70	1.87	2.04
150	0.29	0.44	0.59	0.73	0.88	1.03	1.18	1.32	1.47	1.62	1.76
180	0.26	0.39	0.52	0.65	0.78	0.91	1.04	1.18	1.31	1.44	1.57
240	0.22	0.33	0.43	0.54	0.65	0.76	0.87	0.98	1.08	1.19	1.30
300	0.19	0.28	0.38	0.47	0.56	0.66	0.75	0.85	0.94	1.03	1.13
360	0.17	0.25	0.33	0.42	0.50	0.58	0.67	0.75	0.84	0.92	1.00

Intensity-Duration Design Chart - Template

FIGURE

3-1

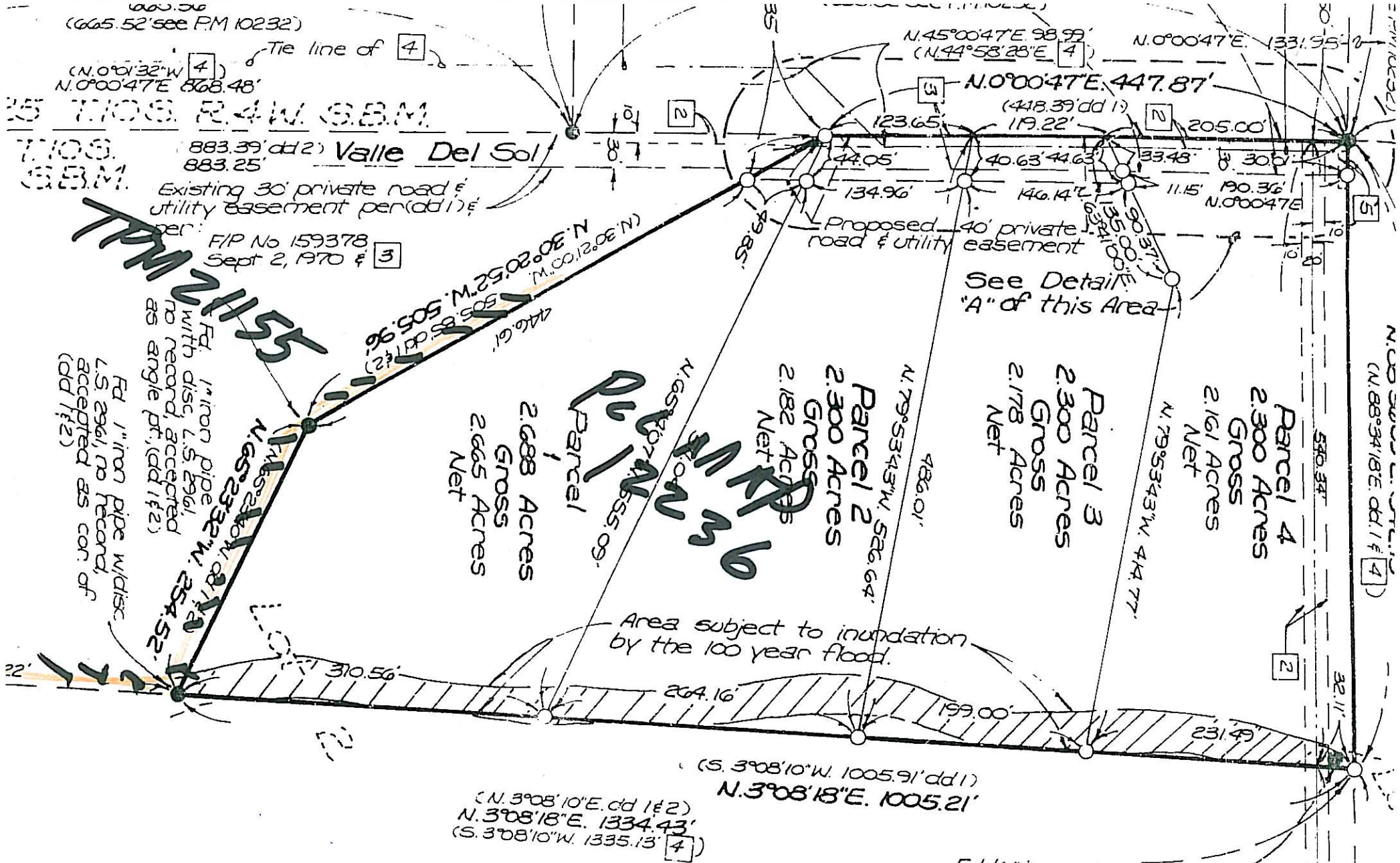

Health Department Certificate: H.D.P.M. #E 17-T0678-13

Parcels * shall have a layout of the sewage disposal system approved by the S.D. Dept. of Public Health prior to the approval of a Bldg. Permit and/or issuance of a Septic Tank Permit. Cuts and fills for driveways and building sites shall be made prior to approval of the layouts. An additional expansion area of 100% of the initial tile line area shall be provided for potential expansion in the event of failure, by gravity flow.

* Perc Tests submitted under name C.L. Nielsen by: David Lowen R.C.E. 31915

PM18075
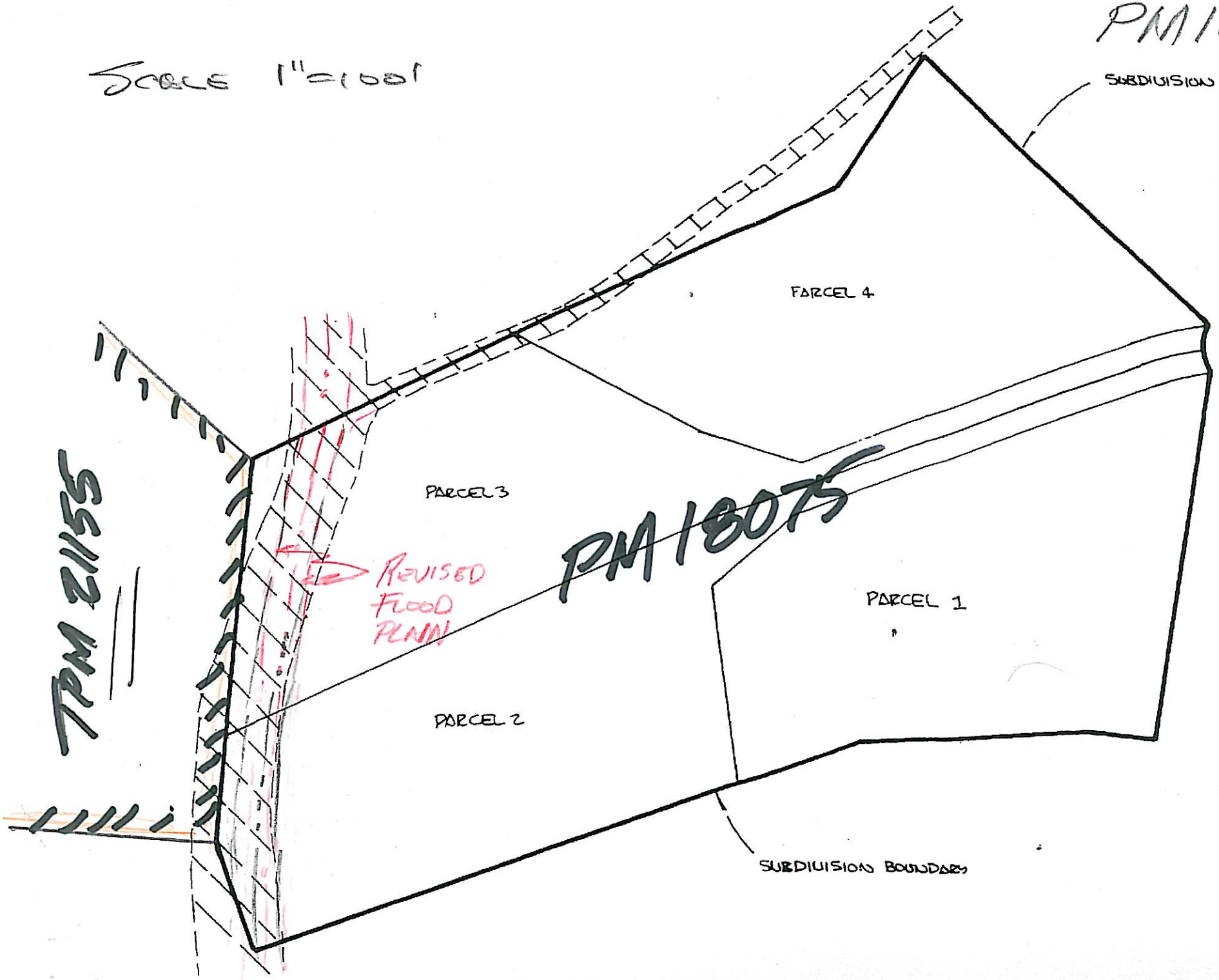
SCALE 1"=100'