Fire Protection Plan/Fuel Management Plan

For TM5421 APN 396-020-13

Oakmont II/ER05-14-003

Prepared By
Lamont Landis
Lamont Landis Consulting
43242 Modena Dr.
Temecula Ca. 92592
760-702-4370 Lamontlandis@adelphia.net

Prepared for the County of San Diego

October 18, 2008

Principal Author Lamont Landis

SDC DPLU RCVD 02-17-2011
TM5421RPL1

TABLE OF CONTENTS

CHAPTER 1 INTRODUCTION PAGE 1

1.1 **Project Location, Description and Environmental Setting**
- 1.1.1 Project Location PAGE 2
- 1.1.2 Project Description
- 1.1.3 Environmental Setting

CHAPTER 2 GUIDELINES FOR THE DETERMINATION OF SIGNIFICANCE PAGE 3

CHAPTER 3 ANTICIPATED FIRE BEHAVIOR IN THE VICINITY PAGE 4

CHAPTER 4 ANALYSIS OF PROJECT EFFECTS

- 4.1 Adequate emergency services PAGE 5
- 4.2 Access
- 4.3 Water
  - 4.3.1 Water Service Availability
- 4.4 Ignition Resistant Construction and Fire Protection Systems
- 4.5 Fire Fuel Assessment PAGE 6
- 4.6 Fire Behavior Modeling
- 4.7 Defensible Space and Vegetation Management PAGE 8
- 4.8 Cumulative Impact Analysis

CHAPTER 5 MITIGATION MEASURES AND DESIGN CONSIDERATIONS PAGE 11

CHAPTER 6 CONCLUSION

CHAPTER 7 LIST OF PREPARERS AND PERSONS AND ORGINAZATION CONTACTED PAGE 12

CHAPTER 8 REFERENCES

APPENDIX

EXECUTIVE SUMMARY

The proposed project is a Tentative Map (Tract No. 5421) that would divide a 103.74 acre parcel into 20 parcels. The proposed parcel sizes range from 2.02 acres to 23.61 acres. The project is located at the intersection of Old Highway 80 and Flinn Springs Road. The project encompasses moderate sloped land with some dense brush. The majority of the site is covered with Coastal Sage Scrub. The surrounding property is urban developed with some non-native grasses. Removal of the vegetation for this project will be a marked improvement. It will substantially reduce the fire hazard in the area. The nearest fire protection for this project is Lakeside Fire Station #26 and is less than 3.00 minutes away. This project will access Flinn Springs, Old Highway 80 and Oak Creek Road. This Fire Protection Plan is in response to a request from the County of San Diego.

Chapter 1 INTRODUCTION

This Fire Protection Plan/Fuel Modification Plan (FPP) has been prepared for the TM 5421 a subdivision with a residential development. The purpose of the Fire Protection Plan is to assess the potential impacts resulting from wildland fire hazards and identify the measures necessary to adequately mitigate those impacts. As part of the assessment this plan has considered the property location, topography, geology, combustible vegetation (fuel types), climatic conditions and fire history. The plan addresses water supply, access (including secondary/emergency access where applicable), structural ignitability and fire resistive building features, fire protection systems and equipment, impacts to existing emergency services, defensible space and vegetation management. The plan identifies and prioritizes areas for hazardous fuel reduction treatments and recommends the types and methods of treatment that will protect one or at risk communities and essential infrastructures. The plan recommends measures that property owners will take to reduce the probability of ignition of structures throughout the area addressed by the plan. This plan has been developed to protect the residential structures from potential radiant heat from wildfire hazards to the maximum extent practical. This plan does not guarantee that the structures will not burn, but greatly reduces that possibility. These are not shelter in place residences. A multitude of factors have been incorporated into the Fuel Modification Plan including wildfire history, prevailing wind patterns, existing vegetation /fuel loading, terrain and adjacent vegetation/land use.

1.1 Project Location, Description and Environmental Setting

1.1.1Project Location

This project is in the Lakeside Fire Protection District response area. The project is located at the intersection of Old Highway 80 and Flinn Springs Road.

1.1.2Project Description

This project is within the Lakeside Fire Protection District emergency response area. The project consists of approximately 103.74 acres. The APN# is 396-020-13. The sizes of the structures are undetermined at this time. The type of occupancy will be single-family residences. The proposed potential use of the new parcels will be residential. There will be no off site improvement to roads. The roads leading to the property are paved and in fair condition.

1.1.3Environmental Setting

The site was visited on June 20, 2008 by Lamont Landis

Topography
The project encompasses flat land with gentle slopes and a steep sloped hillside to the west on the project, elevations onsite range between approximately 890 to 1,240 feet above sea level.

Vegetation types consist of native (11.52 acres) and non-native (4.62 acres) dry climate grasses (both Model 1 fuel), Chamise/Chaparral (5.12 acres Model 4 fuel), Diegan Coastal Sage Scrub (75.56 acres Model SOCAL 18 fuel), Engelmann Oak Woodland (2.68 acres Model tu5 fuel) and urban developed (not modeled). Fuel loads for Model 1 fuels are approximately .74 tons per acre, Model 4 fuels are approximately 5 tons per acre for 1 hour fuels, 4 tons per acre for 10 hour fuels and 2 tons per acre for 100 hour fuels. Model tu5 fuels are 4 tons per acre for 1 hour fuels, 4 tons per acre for 10 hour fuels and 3 tons per acre for 100 hour fuels. Model SOCAL 18 fuels are 3.6 tons per acre for 1 hour fuels and 2.1 tons per acre for 10 hour fuels (RMRS-GTR-153 USDA Forest Service).

On October 25, 2003 the Cedar Wildfire burned over 280,000 acres of natural open space and destroyed 2,232 homes. Embers from the wildfire traveled long distances due to Santa Ana winds and low humidity. The Cedar Fire was driven by Santa Ana winds fueled by 50 year old brush and an extended drought.

The following scenarios are typical of the area and are to be considered worst case assumptions:

Summer

South, Southwest, Northwest and West wind condition can result in the following fuel moistures.

1-hour fuel moisture.....4%
10-hour fuel moisture.....6%
100-hour fuel moisture.....8%
Live woody fuel moisture.....80%

Fall

South, Southwest, Northwest and West wind condition can result in the following fuel moistures.

1-hour fuel moisture..... 2%
10-hour fuel moisture.....3%
100-hour fuel moisture.....5%
Live woody fuel moisture.....50%

Santa Ana Wind Condition two to four times a year.

1-hour fuel moisture 2%
10-hour fuel moisture.....3%
100- hour fuel moisture.....5%
Live woody fuel moisture.....50%

The ownership of the area is private with residential development. A school is located east of the property with a fire station next to the school. Most of the property adjoining the project is urban developed.

Chapter 2 GUIDELINES FOR THE DETERMINATION OF SIGNIFICANCE

The project is located next to some wildland areas with urban developed lands; however the new structures will be separated from the native vegetation by more than 100 feet of modified fuel selected from the San Diego County acceptable plant list. The project has paved roads through developed land to adequately egress the site. The access roads to the proposed parcels are less than 1,320 feet from a point of egress in two directions and meets the San Diego County threshold of 1,320 feet for parcels 1 acre to 4.99 acres. The existing roads and proposed driveways will support fire apparatus for access. The project will result in adequate emergency access. The project will not adversely affect the fire district by the new lots. The water supply with existing and additional fire hydrants will

serve the project and meet the requirements of the Lakeside Fire Protection District and the County of San Diego.

Chapter 3 ANTICIPATED FIRE BEHAVIORS IN THE VICINITY

The anticipated fire behavior onsite is not expected to be significant except for the areas that contain Model 4 fuels (i.e. Chamise, Chaparral, etc.). Flames in the unmodified non-native grasses will be approximately 12.7 feet in height while the flames in the Model 4 (Chamise) could be as high as 91.6 feet. The proper clearance of 30 feet next to the road sides should allow for egress in the event of a fire (non-native grasses with 12.7 foot max flame length). The new structures will be 180 feet from the Model 4 vegetation and 100 feet from all other vegetation and will also be mitigated by enhanced wildland urban interface construction as per Chapter 7A in the San Diego County Building Code. The project will meet the requirements of the California Fire Code, California Code of Regulations Title 14, County Fire Code and the County Consolidated Fire Code. Trees that remain and will be trimmed and limbed up to a minimum of 6 to 8 feet with all down and dead materials removed year round.

Chapter 4 ANALYSIS OF PROJECT EFFECTS

The development of this area will reduce the spread of a wildfire by reducing the fuel loading, along with the existing water supply (fire hydrants for fire fighting); improving of roads in the project and clearing of home sites will provide additional fuel breaks in the area. This will be a major infield that will buffer and slow down a fire in the area meeting the fuel modification recommendations. The project will not adversely affect the government facilities. The TM5421 development will fall within the guidelines of the San Diego County General Plan for emergency response time objectives. The project will meet the San Diego County emergency response objectives.

4.1 Adequate Emergency Services

Initial Fire Department response is from Lakeside Fire Station #26 which is located at 15245 Oak Creek Road, this station is staffed by 3 firefighters. Apparatus include one type one engine and one type three engine. The station is located approximately 2 miles from the above property and is less than 3 minutes away by using the estimated timetable in NFPA 1142.

4.2 Fire Access

The proposed fire access road is designed to allow for egress for the public and fire fighting access for the Fire Department. No fire access road shall be less than 24 ft. paved on 24 ft. graded and all driveways shall be a minimum of 16 ft. The fuel modification on or adjacent to the road adds to the reduction of the spread of the fire and is part of the overall Fuel Modification Plan. All existing roads shall have a minimum clearance of 30 ft. on each side of the road and driveways, turnarounds shall comply with Appendix B. The angle of approach shall not exceed 7 Deg. The proposed access roads shall meet or exceed all San Diego County DPLU and Lakeside Fire Protection District requirements. All roads and driveways shall be all-weather surface suitable for travel by a 75,000 lb. fire apparatus. All driveways or roads that exceed 15% of grade will be Portland cement concrete with deep broom finish perpendicular to the direction of travel to enhance traction; no grade will exceed 20% of grade.

Egress from the project will comply with County standards. All roads are less than 1,320 feet which meets the requirement for more than 1 acre but less than 4.99 acres and does not require a second access as per Title 14. Parcel 9 is in compliance with the pad 1,600 ft. feet from Oak Creek Road which falls within the 2640 feet aloud for parcels over 5 acres but less than 19.99acres. Parcel 9 will also have the use of an emergency egress over a 16 ft wide DG horse trail. This horse trail will be maintained by the County of San Diego. Parcel 13 is approximately 1420 feet to the pad from Oak Creek Road; this will be mitigated by widening the driveway to 20 feet for the same practical effect.

4.3 Water
4.3.1 Public Water

The water supply for this proposed project will come from existing and proposed water mains from the Padre Dam Municipal Water District. Domestic and fire flows will be designed to San Diego County and Lakeside Fire Prevention requirements (2500 GPM @ 20 PSI residual), for placement see attached map.

4.4 Ignition Resistant Construction and Fire Protection Systems

All new structures shall be equipped with the following interface features:

1. Roofs will be a Class "A" noncombustible material and shall meet the DPLU standards.
2. Eaves and balconies will be of noncombustible material and meet the San Diego County Building Code and comply with the International Urban-Wildland Interface Code 2006 Edition.
3. Exterior walls will be a noncombustible or ignition resistive material and meet the San Diego County Building Code Chapter 7A.
4. All habitable structures and attached garages will be equipped with automatic fire sprinklers per the County Consolidated Fire Code requirements (NFPA-13D). All sprinkler systems shall be approved by the Lakeside Fire Department prior to installation.

5. All future outbuildings must be approved by the Lakeside Fire Protection District prior to installation.
6. All structures will comply with the wildland area structural requirements of the County Building Code Chapter 7A in affect at the time of a building permit application.

4.5 Fire Fuel Assessment

The site has the potential to experience a vegetation fire. This is based on the type of vegetation and its continuous nature, Santa Ana Winds, high temperatures, low humidity and drought conditions. On site vegetation consist of non-native dry climate grasses, native grassland, Chamise Chaparral, Diegan Coastal Sage Scrub, Engelmann Oak Woodland, and urban developed (Not Modeled). Off site vegetation is primarily urban developed with some non-native grassland.

4.6 Fire Behavior Modeling

BehavePlus Wildfire Modeling

The BehavePlus Fire Modeling System (Version 3.0.2) developed by the U.S. Forest Service Rocky Mountain Research Station is the generally accepted software for modeling large-scale wildfire behavior and characteristics. The BehavePlus System was designed to evaluate a variety of wildfire variables for large wildland fires including surface fire spread, safety zones, fire containment, spotting distance crown scorch and probability of ignition. Two aspects of this program (surface fire spread and safety zone) have been utilized to assist in determining acceptable fuel modification requirements. The BehavePlus program, coupled with onsite and surrounding area vegetation, access, slope and weather conditions are the basis for the following.

The BehavePlus Fire System has been run for the following worst case scenarios:

60 MPH wind, 100-degree ambient air temperature, 2 % dead fuel moisture, 50% live fuel moisture and 50% max slope with 25% average slope aspect. The model was run for four fuel model scenarios, as the project contains varying types of fuels.

It should be noted that the BehavePlus Model does not and cannot include all variables associated with a specific site and regime and adjacent mixed land uses can influence the results.

The BehavePlus Model run results are summarized in Table 1.

Table 1

4.1 BehavePlus Fire Model

Fuel Model 1 [Short Grass (s)]

Wind Speed & Direction	Mid-flame	Rate of Spread	Fire Line Intensity	Flame Length
60 mph N, NE, E	24.0 mph	665.6 Ch/h	1415 Btu/ft/s	12.7 FT.

Up-slope spotting distance= 1.1 miles

Fuel Model 4 [Chaparral (s)]

Wind Speed & Direction	Mid-flame	Rate of Spread	Fire Line Intensity	Flame Length
60 mph N, NE, E	30.0 mph	1690.3 Ch/h	104485 Btu/ft/s	91.6 ft

Up-slope spotting distance= 4.5 miles

Fuel Model tu5 [Very High Load, Dry Climate Timber-shrub (s) (165)]

Wind Speed & Direction	Mid-flame	Rate of Spread	Fire Line Intensity	Flame Length
60 mph N, NE, E	30.0 mph	123.9 Ch/h	7266 Btu/ft/s	26.9 ft

Up-slope spotting distance= 1.9 miles

Fuel Model SOCAL 18 [Sage / Buckwheat]

Wind Speed & Direction	Mid-flame	Rate of Spread	Fire Line Intensity	Flame Length
60 mph N, NE, E	30.0 mph	309.0 Ch/h	24521 Btu/ft/s	47.0 ft

Up-slope spotting distance= 2.8 miles

The Behave Plus coupled with the expected offshore Santa Ana wind direction, anticipated down slope fire line aspect, and relatively low fuel vegetation within the urban wildland interface areas, and existing fuel modified areas serves as a basis for formulation of the recommended Fuel Modification Zone locations.

4.7 Defensible Space and Vegetation Management

Fuel Management Zones:

Parcels All

As proposed the residential structures from the structures to a point 50 feet in all directions shall be maintained as Zone 1 and from a point 50 feet from the structures to 100 feet shall be maintained as Zone 2. Zones 1 and 2 shall be clearly and permanently marked for annual maintenance. All distances are on a horizontal plain regardless of the slope.

Parcels 15, 16, and 17

These parcels have Chamise/Chaparral and will require an additional zone of clearance. This zone shall be Zone 3. Zone 3 shall be from 100 to 180 feet and will be required where Model 4 fuels are allowed to remain.

Note: All Fuel Modification Zones must be delineated with permanent markers until such times as they are no longer needed as determined by the Fire Marshal. The most reliable markers are metal fence posts with a baked on painted finish, (Day glow orange on the top half).

Fuel Management Zone 1:

Zone 1 is the first 50 feet or as otherwise indicated, this is an area where native vegetation has been removed, irrigated and planted with drought-tolerant and fire resistant plant material. Plant selection shall be from Appendix A of the San Diego County Acceptable Plant List.

The purpose of Zone 1 (set back zone) is to provide a defensible space for fire suppression forces to protect structures from radiant and convective heat. The following shall be part of fuel management of this zone:

1. No combustible construction, groves, firewood, propane tanks, fuel or combustible native or ornamental vegetation shall be allowed within the 50 foot set back Zone 1 or within 30 feet of the edge of slopes.
2. Mature trees (>18') to be limbed up or canopied 6' to 8'from ground level.
3. No tree limbs within 10' of chimney outlets or dead limbs overhanging structures.
4. Spacing between mature tree canopies must be as follows:
   A. Slopes 0-20 % ----10 Feet.
   B. Slopes 21-40 % ----20 Feet.
   C. Slopes > 41 % ----30 Feet.

The minimum horizontal space between the edges of shrubs
A. Slopes 0-20%----2 times the height of the shrub.
B. Slopes 21-40%----4 times the height of the shrub.
C. Slopes > 40%----6 times the height of the shrub.

The minimum vertical space between the top of the shrub and the bottom of the lower tree braches is 3 times the height of the shrub.

(Gilmer, M. 1994 California Wildfire Landscaping, adapted by the State Board of Forestry and Fire Protection on February 8, 2006.)

Fuel Management Zone 2

This Fuel Management Zone will be the area between 50 feet to 100 feet of the structures. The landscape plans shall include methods of erosion control to protect against slope failure. The following shall apply to Zone 2:

1. Clear 50% of the existing native combustible vegetation including all dead and dying. This area must be modified so combustible vegetation does not occupy more than 50% of the total square footage. Trees may remain provided that the horizontal distance between crowns of the adjacent trees is not less than 10 feet.
2. Orchards, groves and vineyards shall be maintained as per sec. 4707.3.2 of the San Diego County Fire Code adopted January 30, 2008.
3. Fire resistive plant materials are also required in Zone 2 to control soil erosion and/or to reduce vegetation mass near the wildland interface.
4. Plant spacing will be the same as noted for Zone 1.
5. All plants used in Zone 1 and 2 to comply with the San Diego County Acceptable Plant list. Appendix A.

Fuel Management Zone 3

Zone 3 is a non-irrigated area between 100 & 180 feet that includes both manufactured and natural slopes. Invasive and/or fire-prone native and exotic species are to be removed from Zone 3 and will not be permitted to grow back. The following is a list of invasive and fire-prone species.

Botanical Name	Common Name
Adenostoma Fasciculatum	Chamise
Adenstoma Spacsifolium	Red Shank
Artemisia Californica	California Sagebrush
Brassica Nigra	Black Mustard
Brassica Ropa	Yellow Mustard, Field Mustard, Wild Turnip
Eriogonum Fascilatum	Common Buckwheat
Nicotiana Bigelevil	Indian Tobacco
Nicatiano Glauca	Tree Tobacco
Salsola Tragus	Tumble Weed, Russian Thistle
Salvia Mellifera	Black Sage
Salvia Opiana	White Sage

No pyrophytes that are high in oils and resins such as Pines, Eucalyptus, and Cedar, Cypress or Juniper species shall be planted in this zone.

Required Maintenance

All remaining plants shall be maintained to a height of up to 18 inches and the native trees and aborescent native shrub species, (such as Oaks, Mexican Elderberry, Toyon, Mission Manzanita, and Laurel Sumac that are over 6 feet in height and can be formed into trees) shall be trimmed 6 feet up from the ground. Trees must be separated by at least 1½ times the fully developed height of the retained tree canopies. All of the dead material must be removed annually or as required by the Lakeside Fire Department.

The ground cover, native plants and grasses below the tree canopies shall be weed whipped and maintained at a height of 4 inches. Open areas resulting from plant removal (root system shall be left intact) will be hydro seeded with a mix of native annual and perennial grasses. These grasses will be allowed to grow and produce seed during winter and spring. As grasses begin to cure (dry out) they will be cut 18 inches or less.

Landscape Requirements/Restrictions

The landscaping within the Fuel Modification Zones must be approved by the Lakeside Fire Protection District and shall include low fuel, drought tolerant type vegetation from the list adopted by the County of San Diego (see Appendix A).

Fuel Modification Zone Maintenance Requirements

Fuel Modification Zones must be maintained in a manner that will fulfill the intent of the Fuel Modification Plan and meet the requirements of the Lakeside Fire Protection District. Maintenance will include initial planting, weeding, irrigation installation, maintenance and plant pruning, removal of dead/down vegetation and the replacement of plants as required.

The following will also apply to this project:

1. Each lot owner is personally responsible for all irrigation and landscaping of Fuel Treatment Zones within their property boundaries.
2. The Lakeside Fire Protection District will hold each lot owner accountable for enforcement of all wildland fire protection issues discussed in this plan.
3. Each lot owner shall not allow trash dumping or disposal of any yard trimmings in the Fuel Treatment Zones.
4. The Lakeside Fire Protection District or its designated representative shall decide any disputes related to individual lot landscaping or fuel treatment, with respect to interpretation of the Fire Protection Plan. Decisions shall be final and binding on the lot owner.
5. Should modifications to the Tentative Map Plans occur, any and/or all of the Fire Protection Plan may be revised at the discretion of the Lakeside Fire Protection District. All exterior boundaries of Zones 1 and 2 shall be permanently marked on the ground for purposes of guiding annual fuel management maintenance and inspection operations. The most reliable markers are steel fence post with baked on painted finish. The upper half of the above ground portion of the fence post is then painted a bright "day glow" orange to improve visibility. These fuel treatment zone markers must be spaced so that the markers on each side of an installed marker can be seen from that marker.

4.8 Cumulative Impact Analysis

This and other projects may have a cumulative impact on the ability to protect residences from wildfires. Over time with this project and other development in the area the population in rural areas will increase, which may increase the chances of a wildfire and increase the number of people and structures exposed to the risk of loss, injury or death.

Chapter 5 MITIGATION MEASURES AND DESIGN CONSIDERATIONS

The fuel modification will reduce the threat to the structures from the vegetation onsite. The structures will be designed with enhanced fire resistive construction as per the County Building Code Chapter 7A. The driveway and access roads will have 30 feet of

clearing (fuel modification) on both sides. The structures will have a minimum of 100 feet of fuel modification. Lots 15, 16 and 17 will require an additional 80 feet of fuel modification to mitigate for Chamise/Chaparral within the project. The fire hydrants and on site road improvements will allow for fire fighting and access.

Chapter 6 CONCLUSIONS

The development of this area will reduce the spread of a wildfire by reducing the fuel loading, with the addition of water supply (additional hydrants for fire fighting @ 2500 gallons per minute at 20 psi residual); improving of roads in the project and the clearing of home sites will provide additional fuel breaks in the area. A three tiered Fuel Modification Zone system is proposed to create an adequate fire safety buffer along the proposed development areas and access roads, which would be defensible space in case of a wildfire. The Fuel Modification Zone recommendations are based upon a combination of BehavePlus modeling data, onsite vegetation, access, surrounding area fuel conditions, slope and worst-case weather conditions. The Fuel Modification Zones have been designed to meet the requirements of the Lakeside Fire Protection District and San Diego County DPLU. The proposed mitigation will reduce the significance to a "less than significant" status in accordance with guidelines.

Chapter 7 LIST OF PREPARERS AND PERSONS AND ORGANIZATIONS CONTACTED

J. Charles Weber – Deputy Fire Marshal /Fire Captain Lakeside Fire Protection District.
Lamont Landis Principal Author (is on the San Diego County list of approved consultants)
Ron Ashman-Crew Engineering

Chapter 8 REFERANCES

1. Behave: Fire Behavior Prediction and Fuel Modeling – Burn Subsystems. Part 1 General Technical Report INT-194. January 1986. Patricia L. Andrews USDA Forest Service, Intermountain Station, Ogden Utah, 84401.
2. Behave: Fire Behavior Prediction and Fuel Modeling- Burn Subsystem Part 2. General Technical Report INT-360. May 1989 Patricia L. Andrews and Carolyn H. Chase. USDA Forest Service. Intermountain Station, Ogden, Utah 84401.

3. BehavePlus Fire Modeling System, Version 3.02 Patricia L. Andrews, Collins D. Bevins and Robert C. Seli. US Forest Services, Rocky Mountain Research Station, Fire Sciences Laboratory. Missoula MT.
4. How to Predict the Spread and Intensity of Forest and Range Fires. General Technical Report INT-1943 May 1989. Richard C. Rothermel, USDA Forest Service Intermountain Station, Ogdan Utah, 84401.
5. 2007 California Fire Code, California Code of Regulations Title 24 Part 9. Which is based on the 2006 International Fire Code,
6. County of San Diego Fire Code and Building Code and Amendments Effective January 30, 2008. Section 96.1.001
7. National Fire Protection Association NFPA 1142 Water Supplies for Suburban and Rural Firefighting 2001 Addition.
8. International Code Council Urban-Wildland Interface Code 2006 edition
9. Standard Fire Behavior Fuel Models: A Comprehensive Set For Use with Rothermel's Surface Fire Spread Model. Authors Joe H. Scott and Robert E. Burgan General Technical Report RMRS-GTR-153 USDA Forest Service Rocky Mountain Research Station.
10. Aids for Determining Fuel Models for Estimating Fire Behavior. By Hal E Anderson USDA Forest Service General Technical Report INT-122
11. General Guidelines for Creating Defensible Space Adopted by The State Board of Forestry and Fire Protection on February 8, 2008

Appendix Table of Contents

Appendix A	**Plant List**
Appendix B	**Fire Apparatus Turnaround**
Appendix C	**Photos**
Appendix D	**BehavePlus Fire Model**
Appendix E	**Aerial Photos**
Appendix F	**Vegetation Map/Fuel Modification**
Appendix G	**Project Facility availability Fire**

Appendix A

Undesirable Plan List

Acceptable Plants For A Defensible Space In Fire Prone Areas

SUGGESTED PLANT LIST FOR A DEFENSIBLE SPACE

BOTANICAL NAME	COMMON NAME	Climate Zone
TREES		
Acer		
platanoides	Norway Maple	M
rubrum	Red Maple	M
saccharinum	Silver Maple	M
saccarum	Sugar Maple	M
macrophyllum	Big Leaf Maple	C/ (R)
Alnus rhombifolia	White Alder	C/I/M (R)
Arbutus		
unedo	Strawberry Tree	All zones
Archontophoenix		
cunninghamiana	King Palm	C
Arctostaphylos spp.**	Manzanita	C/I/D
Brahea		
armata	Blue Hesper Palm	C/D
edulis	Guadalupe Palm	C/D
Ceratonia siliqua	Carob	C/I/D
Cerdidium floridum	Blue Palo Verde	D
Cercis occidentalis**	Western Redbud	C/I/M
Cornus		
nuttallii	Mountain Dogwood	I/M
stolonifera	Redtwig Dogwood	I/M
Eriobotrya		C/I/D
japonica	Loquat	C
Erythrina caffra	Kaffirboom Coral Tree	I/M
Gingko biloba "Fairmount"	Fairmount Maidenhair Tree	I/D/M
Gleditisia triacanthos	Honey Locust	
Juglans		I
californica	California Walnut	C/I
hindsii	California Black Walnut	I/D/M
Lagerstroemia indica	Crape Myrtle	I
Ligustrum lucidum	Glossy Privet	C/I/M
Liquidambar styraciflua	Sweet Gum	I
Liriodendron tulipifera	Tulip Tree	
Lyonothamnus floribundus		C
ssp. Asplenifolius	Fernleaf Catalina Ironwood	C/I/D
Melaleuca spp.	Melaleuca	C/I
Parkinsonia aculeate	Mexican Palo Verde	
Pistacia	Chinese Pistache	
chinensis	Pistachio Nut	C/I/D

vera	Pistachio Nut	I
Pittosporum		
phillyraeoides	Willow Pittosporum	C/I/D
viridiflorum	Cape Pittosporum	C/I
Platanus		
acerifolia	London Plane Tree	All zones
racemosa**	California Sycamore	C/I/M
Populus		
alba	White Poplar	D/M
fremontii**	Western Cottonwood	I
trichocarpa	Black Cottonwood	I/M
Prunus		
xblireiana	Flowering Plum	M
caroliniana	Carolina Laurel Cherry	C
ilicifolia**	Hollyleaf Cherry	C
lyonii**	Catalina Cherry	C
serrulata 'Kwanzan'	Flowering Cherry	M
yedoensis 'Akebono'	Akebono Flowering Cherry	M
Quercus		
agrifolia**	Coast Live Oak	C/I
engelmannii	Engelmann Oak	I
** suber	Cork Oak	C/I/D
Rhus		
lancea**	African Sumac	C/I/D
Salix spp.**	Willow	All zones (R)
Tristania conferta	Brisbane Box	C/I
Ulmus		
parvifolia	Chinese Elm	I/D
pumila	Siberian Elm	C/M
Umbellularia californica**	California Bay Laurel	C/I

SHRUBS

Agave	Century Plant	D
americana	Century Plant	D
deserti	Shawis Century Plant	D
shawi**		
Amorpha fruticosa**	False Indigobush	I
Arbutus		
menziesii**	Madrone	C/I
Arctostaphylos spp.**	Manzanita	C/I/D
Atriplex**		
canescens	Hoary Saltbush	I
lentiformis	Quail Saltbush	D
Baccharis**		
glutinosa	Mule Fat	C/I
pilularis	Coyote Bush	C/I/D
Carissa grandiflora	Natal Plum	C/I
Ceanothus spp.**	California Lilac	C/I/M
Cistus spp.	Rockrose	C/I/D
Cneoridium dumosum**	Bushrue	C
Comarostaphylis**		
diversifolia	Summer Holly	C
Convolvulus cneorum	Bush Morning Glory	C/I/M
Dalea		
orcuttii	Orcutt's Delea	D
spinosa**	Smoke Tree	I/D
Elaeagnus		
pungens	Silverberry	C/I/M
Encelia**		
californica	Coast Sunflower	C/I
farinose	White Brittlebush	D/I
Eriobotrya		
deflexa	Bronze Loquat	C/I
Eriophyllum		
confertiflorum**	Golden Yarrow	C/I
staechadifolium	Lizard Tail	C
Escallonia spp.	Escallonia	C/I
Feijoa sellowiana	Pineapple Guava	C/I/D
Fouqueria splendens	Ocotillo	D
Fremontodendron**		
californicum	Flannelbush	I/M
mexicanum	Southern Flannelbush	I
Galvezia		
juncea	Baja Bush-Snapdragon	C
speciosa	Island Bush-Snapdragon	C
Garrya		
elliptica	Coast Silktassel	C/I
flavescens**	Ashy Silktassel	I/M

Heteromeles arbutifolia**	Ashy Silktassel	I/M
Lantana spp.	Toyon	C/I/M
Lotus scoparius	Lantana	C/I/D
Mahonia spp.	Deerweed	C/I
	Barberry	C/I/M
Malacothamnus		
clementinus		
	San Clemente Island Bush Mallow	C
fasciculatus**		
	Mesa Bushmallow	C/I
Melaleuca spp.		
Mimulus spp.**	Melaleuca	C/I/D
Nolina	Monkeyflower	C/I (R)
parryi		
parryi ssp. wolfii	Parry's Nolina	I
Photinia spp.	Wolf's Bear Grass	D
Pittosporum	Photinia	All Zones
crassifolium		
rhombifolium		CI/I
tobira 'Wheeleri'	Queensland Pittosporum	C/I
undulatum	Wheeler's Dwarf	C/I/D
viridiflorum	Victorian Box	C/I
Plumbago auriculata	Cape Pittosporum	C/I
Prunus	Cape Plumbago	C/I/D
caroliniana		
ilicifolia**	Carolina Laurel Cherry	C
lyonii**	Hollyleaf Cherry	C
Puncia granatum	Catalina Cherry	C
Pyracantha spp.	Pomegranate	C/I/D
Quercus	Firethorn	All Zones
dumosa**		
Rhamus	Scrub Oak	C/I
alaternus		
californica**	Italian Blackthorn	C/I
Rhaphiolepis spp.	Coffeeberry	C/I/M
Rhus	Rhaphiolepis	C/I/D
integrifolia**		
laurina	Lemonade Berry	C/I
lentii	Laurel Sumac	C/I
ovata**	Pink-Flowering Sumac	C/D
trilobata**	Sugarbush	I/M
Ribes	squawbush	I
viburnifolium		
speciosum**	Evergreen Currant	C/I
Romneya coulteri	Fuschia-Flowering Gooseberry	C/I/D
Rosa	Matilija Poppy	I
californica**		
minutifolia		

Salvia spp.**	California Wild Rose	C/I
Sambucus spp.**	Baja California Wild Rose	C/I
Symphoricarpos mollis**	Sage	All Zones
Syringa vulgaris	Elderberry	C/I/M
Tecomaria capensis	Creeping Snowberry	C/I
Teucrium fruticans	Lilac	M
Toxicodendron**	Cape Honeysuckle	C/I/D
diversilobum	Bush Germander	C/I
Verbena		
lilacina	Poison Oak	I/M
Xylosma congestum		
Yucca**	Lilac Verbena	C
schidigera	Shiny Xylosma	C/I
whipplei		
	Mojave Yucca	D
	Foothill Yucca	I

GROUNDCOVERS

Achillea**	Yarrow	All Zones
Aptenia cordifolia	Apteria	C
Arctostaphylos spp.**	Manzanita	C/I/D
Baccharis**		
pilularis	Coyote Bush	C/I/D
Ceanothus spp.**	California Lilac	C/I/M
Cerastium tomentosum	Snow-in-Summer	All Zones
Coprosma kirkii	Creeping Coprosma	C/I/D
Cotoneaster spp.	Redberry	All Zones
Drosanthemum hispidum	Rosea Ice Plant	C/I
Dudleya		
brittonii	Brittonis Chalk Dudleya	C
pulverulenta**	Chalk Dudleya	C/I
virens	Island Live Fore-ever	C
Eschscholzia californica**	California Poppy	All Zones
Euonymus fortunei		
'Carrierei'	Glossy Winter Creeper	M
'Coloratus'	Purple-Leaf Winter Creeper	M
Ferocactus viridescens**	Coast Barrel Cactus	C
Gaillardia grandiflora	Blanket Flower	All Zones
Gazania spp.	Gazania	C/I
Helianthemum spp.**	Sunrose	All Zones
Lantana spp.	Lantana	C/I/D
Lasthenia		
californica**	Common Goldfields	I
glabrata	Coastal Goldfields	C
Lupinus spp.**	Lupine	C/I/M
Myoporum spp.	Myoporum	C/I
Pyracantha spp.	Firethorn	All zones
Rosmarinus officinalis	Rosemary	C/I/D
Santolina		
chamaecyparissus	Lavender Cotton	All Zones
virens	Santolina	All Zones
Trifolium frageriferum	O'Connor's Legume	C/I
Verbena		
rigida	Verbena	All Zones
Viguiera laciniata**	San Diego Sunflower	C/I
Vinca		
minor	Dwarf Periwinkle	M

VINES

Antigonon leptopus	San Miguel Coral Vine	C/I
Distictis buccinatoria	Blood-Red Trumpet Vine	C/I/D
Keckiella cordifolia**	Heart-Leaved Penstemon	C/I
Lonicera		
japonica 'Halliana'	Hall's Honeysuckle	All Zones
subspicata**	Chaparral Honeysuckle	C/I
Solanum		
jasminoides	Potato Vine	C/I/D

PERENNIALS

Coreopsis		
gigantean	Giant Coreopsis	C
grandiflora	Coreopsis	All Zones
maritime	Sea Dahlia	C
verticillata	Coreopsis	C/I
Heuchera maxima	Island Coral Bells	C/I
Iris douglasiana**	Douglas Iris	C/M
Iva hayesiana**	Poverty Weed	C/I
Kniphofia uvaria	Red-Hot Poker	C/M
Lavandula spp.	Lavender	All Zones
Limonium californicum		
var. mexicanum	Coastal Statice	C
perezii	Sea Lavender	C/I
Oenothera spp.	Primrose	C/I/M
Penstemon spp.**	Penstemon	C/I/D
Satureja douglasii	Yerba Buena	C/I
Sisyrinchium		
bellum	Blue-Eyed Grass	C/I
californicum	Golden-Eyed Grass	C
Solanum		
xantii	Purple Nightshade	C/I
Zauschneria**		
californica	California Fuschia	C/I
cana	Hoary California Fuschia	C/I
'Catalina'	Catalina Fuschia	C/I

ANNUALS

Lupinus spp.**	Lupine	C/I/M

UNDESIRABLE PLANT LIST

The following species are highly flammable and should be avoided when planting within the first 50 feet adjacent to a structure. The plants listed below are more susceptible to burning, due to rough or peeling bark, production of large amounts of litter, vegetation that contains oils, resin, wax, or pitch, large amounts of dead material in the plant, or plantings with a high dead to live fuel ratio. Many of these species, if existing on the property and adequately maintained (pruning, thinning, irrigation, litter removal, and weeding), may remain as long as the potential for spreading a fire has been reduced or eliminated.

BOTANICAL NAME	COMMON NAME
Abies species	Fir Trees
Acacia species	Acacia (trees, shrubs, groundcovers)
*Adenostoma sparsifolium***	Red Shanks
*Adenostoma fasciculatum***	Chamise
Agonis juniperina	Juniper Myrtle
Araucaria species	Monkey Puzzle, Norfolk Island Pine
*Artemesia californica***	California Sagebrush
Bambusa species	Bamboo
Cedrus species	Cedar
Chamaecyparis species	False Cypress
Coprosma pumila	Prostrate Coprosma
Cryptomeria japonica	Japanese Cryptomeria
Cupressocyparis leylandii	Leylandii Cypress
*Cupressus forbesii***	Tecate Cypress
Cupressus glabra	Arizona Cypress
Cupressus sempervirens	Italian Cypress
Dodonea viscosa	Hopseed Bush
*Eriogonum fasciculatum***	Common Buckwheat
Eucalyptus species	Eucalyptus
*Heterotheca grandiflora***	Telegraph Plant
Juniperus species	Junipers
Larix species	Larch
Lonicera japonica	Japanese Honeysuckle
Miscanthus species	Eulalia Grass
*Muehlenbergia species***	Deer Grass
Palmae species	Palms
Picea species	Spruce Trees
*Pickeringia Montana***	Chaparral Pea
Pinus species	Pines
Podocarpus species	Fern Pine
Pseudotsuga menziesii	Douglas Fir
Rosmarinus species	Rosemary
*Salvia mellifera***	Black Sage
Taxodium species	Cypress
Taxus species	Yew
Thuja species	Arborvitae
Tsuga species	Hemlock
*Urtica urens***	Burning Nettle

** San Diego County native species

References: Gordon, H. White, T.C. 1994. Ecological Guide to Southern California Chaparral Plant Series. Cleveland National Forest.

Willis, E. 1997. San Diego County Fire Chief's Association. Wildland/Urban Interface Development Standards

City of Oceanside, California. 1995. Vegetation Management. Landscape Development Manual. Community Services Department, Engineering Division.

City of Vista, California 1997. Undesirable Plants. Section 18.56.999. Landscaping Design, Development and Maintenance Standards.

www.bewaterwise.com. 2004. Fire-resistant California Friendly Plants.

www.ucfpl.ucop.edu. 2004. University of California, Berkeley, Forest Products Laboratory, College of Natural Resources. Defensible Space Landscaping in the Urban/Wildland Interface. A Compilation of Fire Performance Ratings of Residential Landscape Plants.

County of Los Angeles Fire Department. 1998. Fuel Modification Plan Guidelines. Appendix I, Undesirable Plant List, and Appendix II, Undesirable Plant List.

INVASIVE PLANT LIST

The following species are considered invasive (i.e., those capable of reproducing and spreading into native, non-irrigated areas and displacing those communities). Non-native plant species are prohibited in all areas adjacent to open space lands. Noxious weeds that have been introduced to San Diego County over the years tend to be more widespread and therefore more difficult to contain. The plants listed below have been identified as invasive and/or as noxious weeds and should not be planted or allowed to sprout in any transitional landscapes (landscapes planted with non-native species next to undeveloped areas).

BOTANICAL NAME	COMMON NAME
Ailanthus altissima	Tree of Heaven
*Anthemis cotula****	Mayweed, Stinking Chamolile
Arctotheca calendola	Cape Weed
Arundo donax	Giant Cane
Atriplex semibaccata	Australian Saltbush
*Brassica species****	Mustard
*Cardaria draba****	Hoary Cress, Perennial Peppergrass
Carpobrotus edulis	Ice Plant
Centaurea solstitialis	Yellow Starthistle
*Cirsium vulgare****	Wild Artichoke
Conium maculatum	Poison Hemlock
*Conyza Canadensis****	Horseweed
Cortaderia selloana	Pampas Grass
Cotoneaster lacteus	Cotoneaster
Cupressus macrocarpa	Monterey Cypress
*Cynara cardunculus****	Artichoke Thistle
Cytisus species	Scotch Broom, French Broom, etc
Elaeagnus angustifolia	Russian Olive
Eucalyptus globulus	Eucalyptus Blue Gum
*Gensita species****	Broom
Hedera helix	English Ivy
Hypericum perforatum	St. John's Wort
Ilex aquifolium	English Holly
*Lactuca serriola****	Prickly Lettuce
Lepidium latifolium	Perennial Pepperweed
Myoporum parvifolium	Trailing Myoporum
Nerium oleander	Oleander
Nicotiana species	Tree Tobacco
Olea europaea	Olive
Pennisetum setaceum	Fountain Grass
Ricinus communis	Castor Bean
Robinia pseudoacacia	Black Locust
*Salsola australis****	Russian Thistle, Tumbleweed
Schinus molle	California Pepper
Schinus terebinthifolius	Brazilian Pepper
*Silybum marianum****	Milk Thistle
Spartium junceum	Spanish Broom

Tamarix species	Tamarisk
*Ulex europea****	Gorse
Vinca major	Periwinkle

*** Introduced Weeds to San Diego County

References: Bell, Carl, Regional Advisor – Invasive Plants. 2004. University of California Cooperative Extension.

California Exotic Pest Plant Council. October, 1999. Exotic Pest Plants of Greatest Ecological Concern in California. Most Invasive Wildland Pest Plants. www.caleppc.org/info/99lista.html.

Appendix B

Fire Apparatus Turnaround Configurations

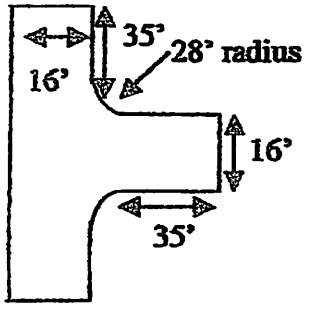

Private Driveway Hammerhead

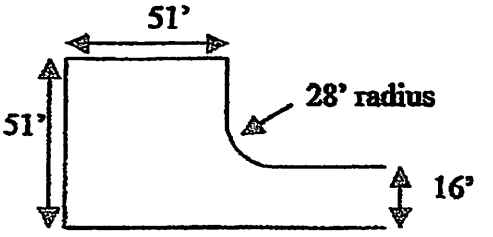

Alternate Private Driveway Hammerhead

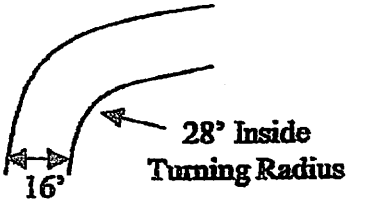

Private Road or Driveway Cul-de-sac

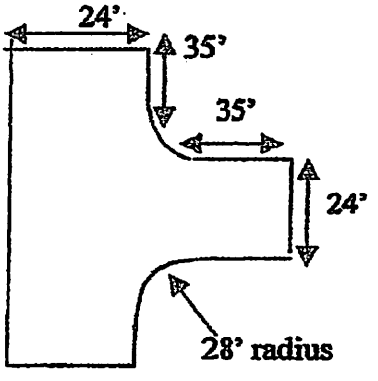

Private Road Hammerhead

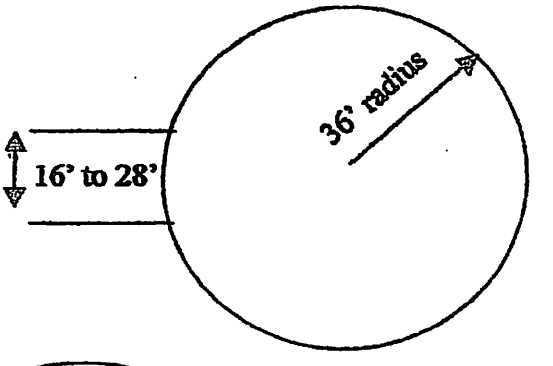

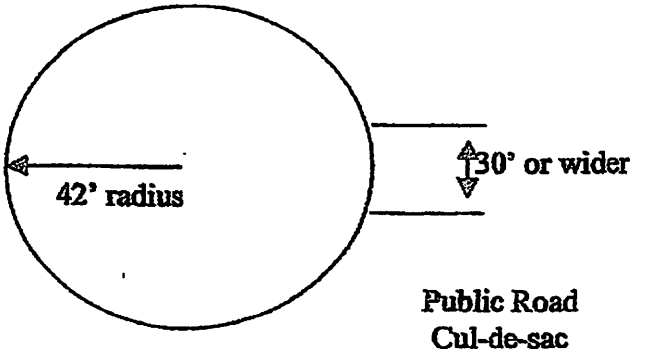

Public Road Cul-de-sac

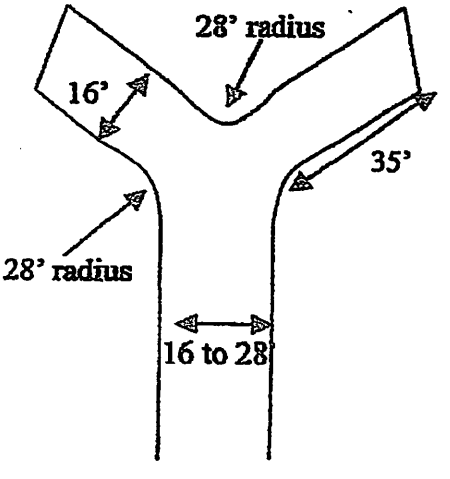

Hammerhead Incorporating Radius

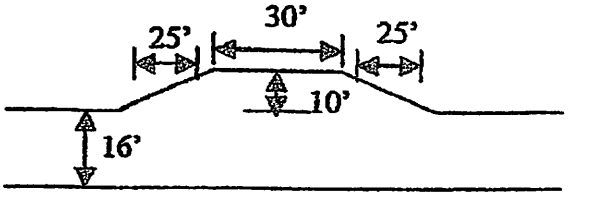

Turnout—Required for driveways In excess of 300-400'

NOT TO SCALE

(OVER)

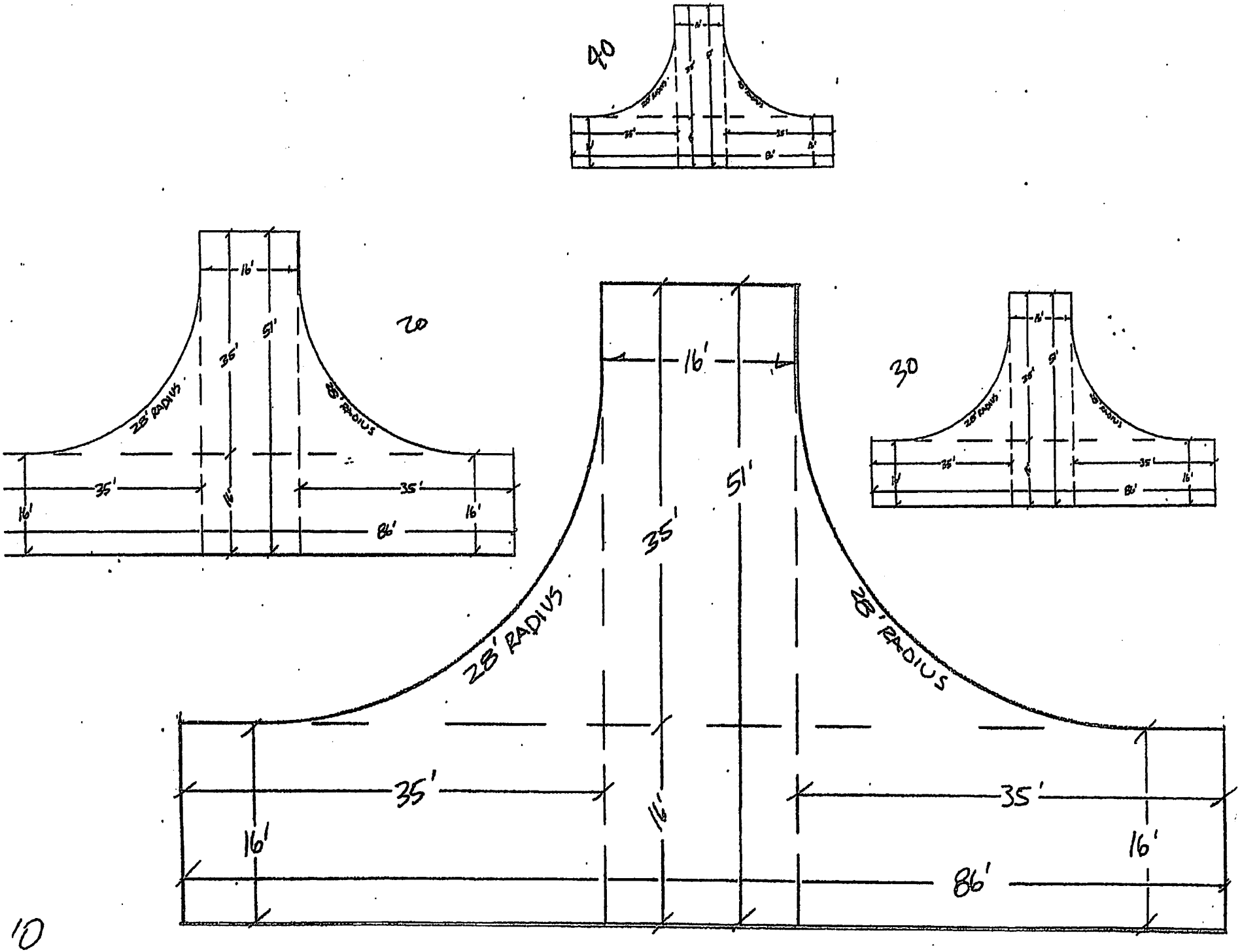
40
20
30
16'
51'
35'
28' RADIUS
28' RADIUS
35'
35'
16'
16'
86'
16'
51'
35'
28' RADIUS
28' RADIUS
35'
35'
16'
16'
86'
16'
16'
35'
35'
16'
16'
86'

10

Appendix C

Photos

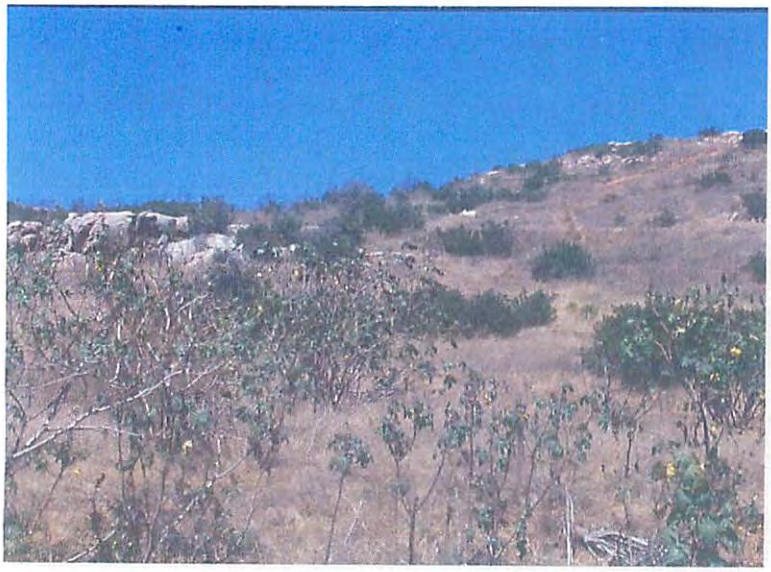

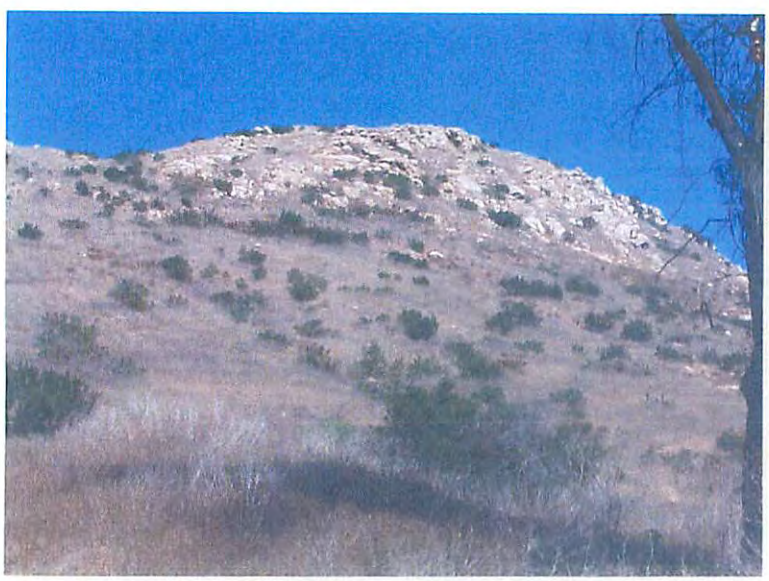

Appendix D

Behaveplus3.02 Fire Model

Modules: SURFACE, SPOT, IGNITE

Description		Oakmont Tract 5421
Fuel/Vegetation, Surface/Understory		
Fuel Model		1
Fuel/Vegetation, Overstory		
Canopy Height	ft	0
Fuel Moisture		
1-h Moisture	%	2
10-h Moisture	%	
100-h Moisture	%	
Live Herbaceous Moisture	%	
Live Woody Moisture	%	
Weather		
20-ft Wind Speed (upslope)	mi/h	60
Wind Adjustment Factor		0.4
Air Temperature	oF	100
Fuel Shading from the Sun	%	0
Terrain		
Slope Steepness	%	50
Ridge-to-Valley Elevation Difference	ft	250
Ridge-to-Valley Horizontal Distance	mi	0.2
Spotting Source Location		VB

Run Option Notes

Calculations are only for the direction of maximum spread [SURFACE].

Fireline intensity, flame length, and spread distance are always for the direction of the spread calculations [SURFACE].

Wind is blowing upslope [SURFACE].

Output Variables

Surface Rate of Spread (maximum) (ch/h) [SURFACE]

Heat per Unit Area (Btu/ft2) [SURFACE]

Fireline Intensity (Btu/ft/s) [SURFACE]

Flame Length (ft) [SURFACE]

Direction of Maximum Spread (from upslope) (deg) [SURFACE]

(continued on next page)

Input Worksheet (continued)

Midflame Wind Speed (upslope) (mi/h) [SURFACE]

Wind Adjustment Factor [SURFACE]

Spot Dist from Wind Driven Surface Fire (mi) [SPOT]

Probability of Ignition from a Firebrand (%) [IGNITE]

Notes

Oakmont Tract 5421

Surface Rate of Spread (maximum)	665.6	ch/h
Heat per Unit Area	116	Btu/ft2
Fireline Intensity	1415	Btu/ft/s
Flame Length	12.7	ft
Direction of Maximum Spread (from upslope)	0	deg
Midflame Wind Speed (upslope)	24.0	mi/h
Wind Adjustment Factor	0.4	
Spot Dist from Wind Driven Surface Fire	1.1	mi
Probability of Ignition from a Firebrand	100	%

Discrete Variable Codes Used
Oakmont Tract 5421

Fuel Model

1	Short grass (S)

Spotting Source Location

VB	Valley Bottom

Modules: SURFACE, SPOT, IGNITE

Description		Oakmont Tract 5421
Fuel/Vegetation, Surface/Understory		
Fuel Model		4
Fuel/Vegetation, Overstory		
Canopy Height	ft	0
Fuel Moisture		
1-h Moisture	%	2
10-h Moisture	%	3
100-h Moisture	%	5
Live Herbaceous Moisture	%	
Live Woody Moisture	%	60
Weather		
20-ft Wind Speed (upslope)	mi/h	60
Wind Adjustment Factor		0.5
Air Temperature	oF	100
Fuel Shading from the Sun	%	0
Terrain		
Slope Steepness	%	50
Ridge-to-Valley Elevation Difference	ft	250
Ridge-to-Valley Horizontal Distance	mi	0.2
Spotting Source Location		VB

Run Option Notes

Calculations are only for the direction of maximum spread [SURFACE].

Fireline intensity, flame length, and spread distance are always for the direction of the spread calculations [SURFACE].

Wind is blowing upslope [SURFACE].

Output Variables

Surface Rate of Spread (maximum) (ch/h) [SURFACE]

Heat per Unit Area (Btu/ft2) [SURFACE]

Fireline Intensity (Btu/ft/s) [SURFACE]

Flame Length (ft) [SURFACE]

Direction of Maximum Spread (from upslope) (deg) [SURFACE]

(continued on next page)

Input Worksheet (continued)

Midflame Wind Speed (upslope) (mi/h) [SURFACE]

Wind Adjustment Factor [SURFACE]

Spot Dist from Wind Driven Surface Fire (mi) [SPOT]

Probability of Ignition from a Firebrand (%) [IGNITE]

Notes

Oakmont Tract 5421

Surface Rate of Spread (maximum)	1690.3	ch/h
Heat per Unit Area	3372	Btu/ft2
Fireline Intensity	104485	Btu/ft/s
Flame Length	91.6	ft
Direction of Maximum Spread (from upslope)	0	deg
Midflame Wind Speed (upslope)	30.0	mi/h
Wind Adjustment Factor	0.5	
Spot Dist from Wind Driven Surface Fire	4.5	mi
Probability of Ignition from a Firebrand	100	%

Discrete Variable Codes Used
Oakmont Tract 5421

Fuel Model

4	Chaparral (S)

Spotting Source Location

VB	Valley Bottom

Modules: SURFACE, SPOT, IGNITE

Description		Oakmont Tract 5421
Fuel/Vegetation, Surface/Understory		
Fuel Model		tu5
Fuel/Vegetation, Overstory		
Canopy Height	ft	0
Fuel Moisture		
1-h Moisture	%	2
10-h Moisture	%	3
100-h Moisture	%	5
Live Herbaceous Moisture	%	
Live Woody Moisture	%	50
Weather		
20-ft Wind Speed (upslope)	mi/h	60
Wind Adjustment Factor		0.5
Air Temperature	oF	100
Fuel Shading from the Sun	%	0
Terrain		
Slope Steepness	%	50
Ridge-to-Valley Elevation Difference	ft	250
Ridge-to-Valley Horizontal Distance	mi	0.2
Spotting Source Location		VB

Run Option Notes

Calculations are only for the direction of maximum spread [SURFACE].

Fireline intensity, flame length, and spread distance are always for the direction of the spread calculations [SURFACE].

Wind is blowing upslope [SURFACE].

Output Variables

Surface Rate of Spread (maximum) (ch/h) [SURFACE]

Heat per Unit Area (Btu/ft2) [SURFACE]

Fireline Intensity (Btu/ft/s) [SURFACE]

Flame Length (ft) [SURFACE]

Direction of Maximum Spread (from upslope) (deg) [SURFACE]

(continued on next page)

Input Worksheet (continued)

Midflame Wind Speed (upslope) (mi/h) [SURFACE]

Wind Adjustment Factor [SURFACE]

Spot Dist from Wind Driven Surface Fire (mi) [SPOT]

Probability of Ignition from a Firebrand (%) [IGNITE]

Notes

Oakmont Tract 5421

Surface Rate of Spread (maximum)	123.9	ch/h
Heat per Unit Area	3200	Btu/ft2
Fireline Intensity	7266	Btu/ft/s
Flame Length	26.9	ft
Direction of Maximum Spread (from upslope)	0	deg
Midflame Wind Speed (upslope)	30.0	mi/h
Wind Adjustment Factor	0.5	
Spot Dist from Wind Driven Surface Fire	1.9	mi
Probability of Ignition from a Firebrand	100	%

Discrete Variable Codes Used
Oakmont Tract 5421

Fuel Model

tu5	Very high load, dry climate timber-shrub (S) (165)

Spotting Source Location

VB	Valley Bottom

Modules: SURFACE, SPOT, IGNITE

Description		Oakmont Tract 5421
Fuel/Vegetation, Surface/Understory		
Fuel Model		SCAL18
Fuel/Vegetation, Overstory		
Canopy Height	ft	0
Fuel Moisture		
1-h Moisture	%	2
10-h Moisture	%	3
100-h Moisture	%	5
Live Herbaceous Moisture	%	50
Live Woody Moisture	%	50
Weather		
20-ft Wind Speed (upslope)	mi/h	60
Wind Adjustment Factor		0.5
Air Temperature	oF	100
Fuel Shading from the Sun	%	0
Terrain		
Slope Steepness	%	50
Ridge-to-Valley Elevation Difference	ft	250
Ridge-to-Valley Horizontal Distance	mi	0.2
Spotting Source Location		VB

Run Option Notes

Calculations are only for the direction of maximum spread [SURFACE].

Fireline intensity, flame length, and spread distance are always for the direction of the spread calculations [SURFACE].

Wind is blowing upslope [SURFACE].

Output Variables

Surface Rate of Spread (maximum) (ch/h) [SURFACE]

Heat per Unit Area (Btu/ft2) [SURFACE]

Fireline Intensity (Btu/ft/s) [SURFACE]

Flame Length (ft) [SURFACE]

Direction of Maximum Spread (from upslope) (deg) [SURFACE]

(continued on next page)

Input Worksheet (continued)

Midflame Wind Speed (upslope) (mi/h) [SURFACE]

Wind Adjustment Factor [SURFACE]

Spot Dist from Wind Driven Surface Fire (mi) [SPOT]

Probability of Ignition from a Firebrand (%) [IGNITE]

Notes

Oakmont Tract 5421

Surface Rate of Spread (maximum)	309.0	ch/h
Heat per Unit Area	4329	Btu/ft2
Fireline Intensity	24521	Btu/ft/s
Flame Length	47.0	ft
Direction of Maximum Spread (from upslope)	0	deg
Midflame Wind Speed (upslope)	30.0	mi/h
Wind Adjustment Factor	0.5	
Spot Dist from Wind Driven Surface Fire	2.8	mi
Probability of Ignition from a Firebrand	100	%

Discrete Variable Codes Used
Oakmont Tract 5421

Fuel Model

SCAL18	Sage / Buckwheat

Spotting Source Location

VB	Valley Bottom

Appendix E

Aerial Photos

MAPQUEST

Lakeside, CA US

All rights reserved. Use Subject to License/Copyright
This map is informational only. No representation is made or warranty given as to its content. User assumes all risk

Appendix F

Vegetation Map/Fuel Modification Map

COUNTY OF SAN DIEGO TRACT NO. 5421 RPL1

(BLOSSOM VALLEY / FLINN SPRINGS AREA)

LEGAL DESCRIPTION:
BEING A SUBDIVISION OF A PORTION OF LOT 44 OF MAP NO.8660.

ASSESSORS PARCEL NUMBER:
396-020-13

TAX RATE AREA:
59290

COMMUNITY PLAN:
LAKESIDE

EXISTING ZONING:
A-70-2

PROPOSED ZONING:
A-70-2

REGIONAL CATEGORY:
ESTATE, MULTIPLE RURAL USE

LAND USE DESIGNATION:
17, 18

AREA:
103.74 ACRES GROSS
99.79 ACRES NET

DWELLING UNITS
20

NUMBER OF LOTS
20

MINIMUM LOT SIZE
2.00 ACRES

TOPOGRAPHY
AERIAL TOPOGRAPHIC SURVEY BY PHOTOGEODETIC CORP. 02-22-1991

SOLAR ACCESS STATEMENT
THIS IS A SOLAR SUBDIVISION AS REQUIRED BY SECTION 81.401 (n) OF THE SUBDIVISION ORDINANCE. ALL LOTS HAVE AT LEAST 100 SQUARE FEET OF UNOBSTRUCTED ACCESS TO SUNLIGHT ON BUILDABLE PORTION OF THE LOTS.

STREET LIGHTS
AS TO BE REQUIRED BY THE COUNTY ENGINEER

PARK LAND
PARK FEES WILL BE PAID IN LIEU OF DEDICATION

GRADING

EXCAVATION	9400	CY. ± (ROAD GRADING ONLY, LOT
FILL	9400	CY. ± SALES PROJECT)
IMPORT/EXPORT	0	CY. ±

SPECIAL ASSESSMENT ACT STATEMENT
NO SPECIAL ASSESSMENTS ARE PROPOSED

LAND PROJECT STATEMENT
THIS IS NOT A LAND PROJECT

SERVICE DISTRICTS

SEWER:	PROPOSED PRIVATE SEPTIC SYSTEMS
WATER:	PADRE DAM MUNICIPAL WATER DISTRICT
FIRE:	LAKESIDE FIRE PROTECTION DISTRICT
ELEM. SCHOOL:	CALDIN VALLEY UNION SCHOOL DISTRICT,
HIGH SCHOOL:	GROSSMONT HIGH SCHOOL DISTRICT
UTILITIES:	SAN DIEGO GAS AND ELECTRIC
TELEPHONE:	PACIFIC BELL
POLICE:	SAN DIEGO COUNTY SHERIFF
STREET LIGHTING:	DEVELOPER WILL COMPLY WITH COUNTY STANDARDS
CABLE TELEVISION:	COX COMMUNICATIONS

OWNER/SUBDIVIDER
HSIUNG CHENG AND LUCINA CHENG, CO TRUSTEES OF THE CHENG INTER VIVOS TRUST DATED MAY 21, 1998

1852 HACIENDA DRIVE
EL CAJON, CA 92020
(619) 562-0842

HSIUNG CHENG, TRUSTEE

LUCINA CHENG, TRUSTEE

ZONE		ZONE	
USE REGULATIONS:	A-70	USE REGULATIONS	A-70
ANIMAL REGULATIONS	L	ANIMAL REGULATIONS	L
DENSITY	-	DENSITY	2S
LOT SIZE	2.0 ACRE	LOT SIZE	2.0 ACRE
BUILDING TYPE	C	BUILDING TYPE	C
MAXIMUM FLOOR AREA	---	MAXIMUM FLOOR AREA	---
FLOOR AREA RATIO	---	FLOOR AREA RATIO	---
HEIGHT	G	HEIGHT	G
LOT COVERAGE	---	LOT COVERAGE	---
SETBACK	C	SETBACK	C
OPEN SPACE	---	OPEN SPACE	---
SPECIAL AREA REGULATIONS	---	SPECIAL AREA REGULATIONS	---

LOT	AREA SCHEDULE GROSS ACRES	NET ACRES
1	4.48	4.41
2	8.78	8.32
3	23.81	23.60
4	3.07	3.01
5	2.68	2.67
6	2.84	2.46
7	2.45	2.23
8	11.60	11.58
9	13.50	13.49
10	2.63	2.63
11	2.61	2.52
12	2.63	2.01
13	2.02	2.00
14	2.22	2.22
15	4.17	4.00
16	4.27	4.26
17	2.70	2.58
18	2.17	2.10
19	2.11	2.00
20	2.68	2.02

COUNTY NOTE:
THIS PLAN IS PROVIDED TO ALLOW FOR FULL AND ACCURATE DISCRETIONARY REVIEW OF A PROPOSED DEVELOPMENT PROJECT. THE PROPERTY OWNER ACKNOWLEDGES THAT ACCEPTANCE OR APPROVAL OF THIS PLAN DOES NOT CONSTITUTE AN APPROVAL TO PERFORM ANY GRADING SHOWN HEREON, AND AGREES TO OBTAIN VALID GRADING PERMITS(S) BEFORE COMMENCING SUCH ACTIVITY.

CONCEPT GRADING NOTE:
PAD AND DRIVEWAY GRADING IS PRESENTED FOR INFORMATION ONLY TO FACILITATE THE C.E.Q.A. DISCLOSURE PROCESS. THE APPLICANT PROPOSES A LOT SALES PROJECT AND DOES NOT INTEND TO GRADE INDIVIDUAL BUILDING SITES. THE APPLICANT ACKNOWLEDGES THAT EXACT GRADING OF THE SITE MAY DETERMINE THE PROJECT AND MAY NECESSITATE ADDITIONAL PUBLIC REVIEW.

APPROXIMATE PAD/DRIVEWAY GRADING QUANTITIES:

EXCAVATION:	C.Y.
EMBANKMENT:	C.Y.
IMPORT/EXPORT:	C.Y.
MAXIMUM SLOPE HEIGHTS	
CUT:	@ 1 1/2:1
FILL:	@ 2:1

BIOLOGICAL RESOURCES
OAKMONT II TENTATIVE MAP
TM 5421/ ER05-14-003
APN 396-020-13

LEGEND

- DECAN COASTAL SAGE SCRUB, COASTAL FORM (HOLLAND CODE 32500)
- CHAMISE CHAPARRAL (HOLLAND CODE 37200)
- ENGELMANN OAK WOODLAND (HOLLAND CODE 71180)
- NATIVE GRASSLAND (HOLLAND CODE 42100)
- NON-NATIVE GRASSLAND (HOLLAND CODE 42200)
- URBAN/DEVELOPED (HOLLAND CODE 12000)

SENSITIVE SPECIES

- VEREGATED DUDLEYA (APPROXIMATE AREA)
- CHOCOLATE LILY (APPROXIMATE AREA)
- PALMER'S GRAPPLINGHOOK (APPROXIMATE AREA)
- TIGER BEETLE (APPROXIMATE AREA)
- RUSH-LIKE BRISTLEWEED (APPROXIMATE AREA)

NOT SHOWN:
ENGELMANN OAK (CO-DOMINANT IN ENGELMANN OAK WOODLAND)
DECUMBENT CEDEBRUSH (OCCASIONAL THROUGHOUT NATIVE GRASSLAND)
SAN DIEGO COUNTY WOLFEBERRY (ABUNDANT IN CSS ON SOUTH FACING SLOPES)
ORANGE-THROATED WHIPTAIL (NUMEROUS SPECIMENS IN ALL AREAS OF CSS AND OTHER HABITATS)
SHARP-SHINNED HAWK (FLYING ACROSS WESTERN END OF SITE)
TURKEY VULTURE (SOARING OVER SITE)
MONARCH (FLYING ACROSS SITE)

VINCENT N. SCHEIDT, MA
CERTIFIED BIOLOGICAL CONSULTANT
3158 OCCIDENTAL STREET, SAN DIEGO, CA 92122; PHONE: (858) 457-3673

LEGEND

- CUT SLOPE (1-1/2:1 MAX.)
- FILL SLOPE (2:1 MAX.)
- PROPOSED WATER LINE
- PROPOSED FIRE HYDRANT
- DAYLIGHT LINE
- PAD ELEVATION (870)
- EXISTING A.C. PAVING
- PROPOSED A.C. PAVING
- EXISTING CONTOUR
- DIRECTION OF DRAINAGE
- BROW DITCH
- TEST HOLES
- TOHT LINE
- LEACH LINE

GRAPHIC SCALE
100 0 50 100 200 400
(IN FEET)
1 inch = 100 ft.

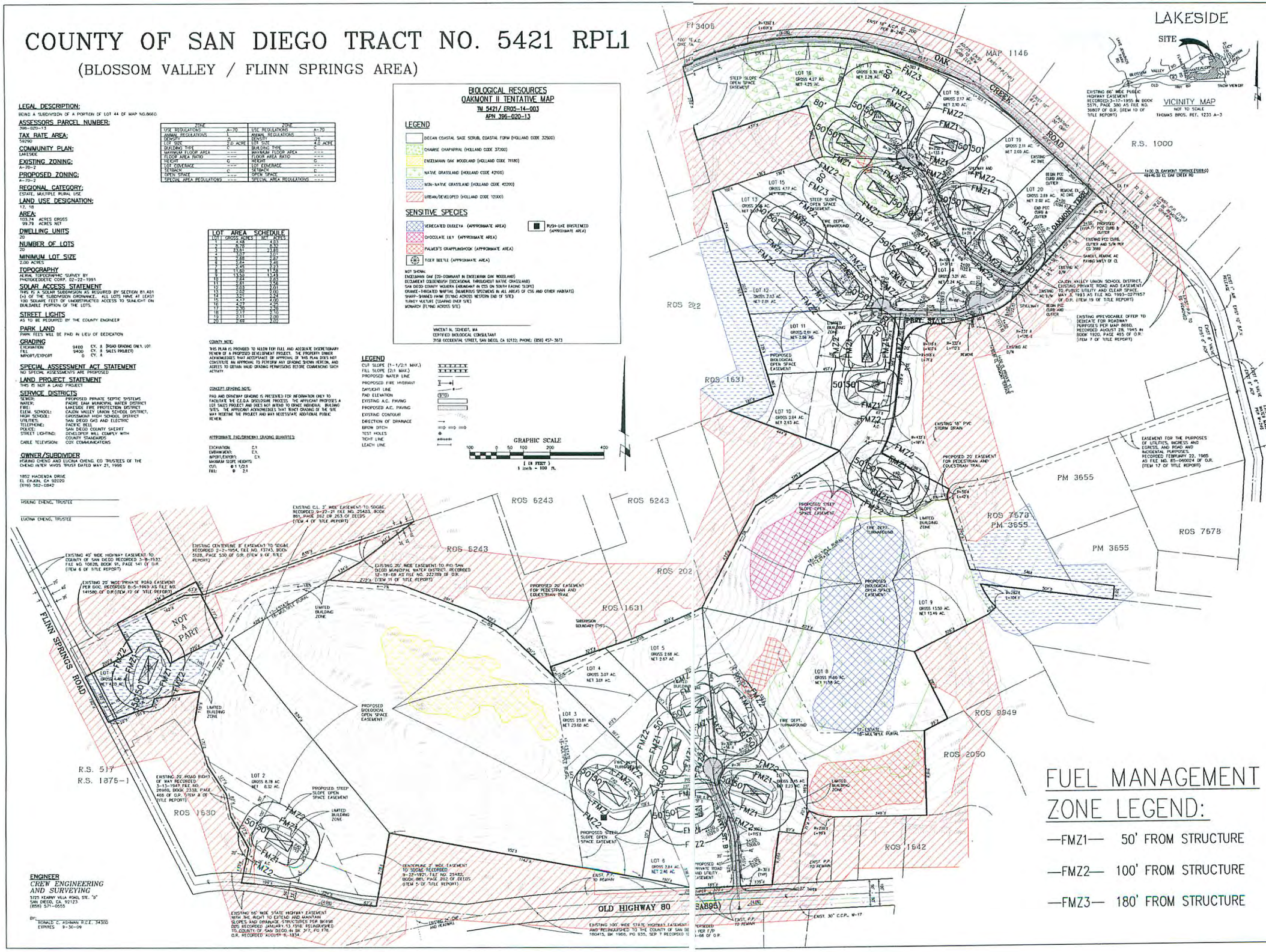

FUEL MANAGEMENT ZONE LEGEND:

—FMZ1— 50' FROM STRUCTURE

—FMZ2— 100' FROM STRUCTURE

—FMZ3— 180' FROM STRUCTURE

ENGINEER
CREW ENGINEERING AND SURVEYING
5725 KEARNY VILLA ROAD, STE. "B"
SAN DIEGO, CA. 92123
(858) 571-0555

BY: RONALD C. ASHMAN R.C.E. 34500
EXPIRES 9-30-09

REVISIONS	BY
△	
△	
△	
△	
△	
△	
△	

OAKMONT II BIOLOGICAL RESOURCES

Date:	11/7/07
Scale:	1" = 100'
Drawn:	RB
Approved:	R.A.
Job:	450
Sheet:	1
Of	1 Sheets

Appendix G

Project Facility Availability Fire

COUNTY SAN DIEGO
DEPT. OF PL ING & LAND USE
5201 RUFFIN ROAD, SUITE B
SAN DIEGO, CA 92123-1666
(858) 565-5981 • (888) 267-8770

PROJECT FACILITY AVAILABILITY FORM

FIRE **F**

Please type or use pen

Hsiung Cheng — Owner's Name
(619) 562-0842 — Phone
1852 Hacienda Drive — Owner's Mailing Address, Street
El Cajon — City
CA — State
92020 — Zip

ORG ____
ACCT ____
ACT ____
TASK ____
DATE ____ AMT $ ____
DISTRICT CASHIER'S USE ONLY

SECTION 1. PROJECT DESCRIPTION

TO BE COMPLETED BY APPLICANT

A. [X] Major Subdivision (TM)
[ ] Minor Subdivision (TPM)
[ ] Boundary Adjustment
[ ] Rezone (Reclassification) from ____ to ____ zone.
[ ] Major Use Permit (MUP), purpose: ____
[ ] Time Extension...Case No. ____
[ ] Expired Map...Case No. ____
[ ] Other ____
[ ] Specific Plan or Specific Plan Amendment
[ ] Certificate of Compliance: ____

B. [ ] Residential ..... Total number of dwelling units ____
[ ] Commercial ..... Gross floor area ____
[ ] Industrial ..... Gross floor area ____
[ ] Other ..... Gross floor area ____

C. Total Project acreage 103 Total lots 20 Smallest proposed lot 2.0 ac.

Assessor's Parcel Number(s)
(Add extra if necessary)

396	020	13

Thomas Bros. Page 1233 Grid A-3
Oak Creek Road — Project address, Street
Lakeside — Community Planning Area/Subregion
92021 — Zip

OWNER/APPLICANT AGREES TO COMPLETE ALL CONDITIONS REQUIRED BY THE DISTRICT.

Applicant's Signature: [signature] as agent for owner Date: 4/19/2007
Address: 5725 Kearny Villa Rd., Ste. D, SD, CA, 92123 Phone: (858) 571-0555
(On completion of above, present to the district that provides fire protection to complete Section 2 and 3 below.)

SECTION 2: FACILITY AVAILABILITY

TO BE COMPLETED BY DISTRICT

District name: Lakeside Fire Protection District

Indicate the location and distance of the primary fire station that will serve the proposed project: Fire Station 26 is located at 15245 Oak Creek Rd and is approx 1 mile from the project site.

A. [XXX] Project is in the District and eligible for service.
[ ] Project is not in the District but is within its Sphere of Influence boundary, owner must apply for annexation.
[ ] Project is not in the District and not within its Sphere of Influence boundary.

B. [XXX] Based on the capacity and capability of the District's existing and planned facilities, fire protection facilities are currently adequate or will be adequate to serve the proposed project. The expected emergency travel time to the proposed project is 3 minutes.
[ ] Fire protection facilities are not expected to be adequate to serve the proposed development within the next five years.

C. [XXX] District conditions are attached. Number of sheets attached: 3
[ ] District will submit conditions at a later date.

SECTION 3. FUELBREAK REQUIREMENTS

Note: The fuelbreak requirements prescribed by the fire district for the proposed project do not authorize any clearing prior to project approval by the Department of Planning and Land Use.

[XXX] Within the proposed project 100 feet of clearing will be required around all structures.
[XXX] The proposed project is located in a hazardous wildland fire area, and additional fuelbreak requirements may apply. Environmental mitigation requirements should be coordinated with the fire district to ensure that these requirements will not pose fire hazards.

This Project Facility Availability Form is valid until final discretionary action is taken pursuant to the application for the proposed project or until it is withdrawn, unless a shorter expiration date is otherwise noted. ****Expires 5/3/08****

J. Charles Weber — *Authorized signature*
J.C Weber, Deputy Fire Marshal — *Print name and title*
(619) 390-2350 X 307 — *Phone*
5/3/07 — *Date*

On completion of Section 2 and 3 by the District, applicant is to submit this form with application to:
Zoning Counter, Department of Planning and Land Use, 5201 Ruffin Road, Suite B, San Diego, CA 92123

DPLU-399F (09/06)

JN 450

Lakeside Fire Protection District
12365 Parkside St., Lakeside, CA 92040
Bus. (619) 390-2350, Fax (619) 443-1568
Mark T. Baker, Fire Chief

January 19, 2010

County of San Diego
Department of Planning and Land Use
5201 Ruffin Road, Suite B
San Diego, CA 92123

Re: TM 5421 Fire Protection Plan Acceptance

The District has reviewed the Fire Protection Plan submitted by Lamont Landis, dated October 18, 2008, for compliance with CCR Title 24 Part 9 (California Fire Code), CCR Title 14 (SRA Fire Safety Regulations) and the 2006 edition of the International Wildland Urban Interface Code.

After review, the District finds that the Fire Protection Plan is in substantial compliance with the District's specifications for Fire Protection Plans. The District, therefore, accepts and approves the plan as submitted.

If you have any questions, please feel free to contact me at 619-390-2350 extension 307.

J. Charles Weber

J. Charles Weber
Deputy Fire Marshal/Fire Captain
Fire Prevention Division