Fire Protection Plan/Fuel Management Plan

For TM 5502/APN# 103-010-72

ER-06-01-002

Baldwin Project

Submitted By

Lamont Landis
Lamont Landis Consulting
43242 Modena Dr.
Temecula Ca. 92592
760-702-4370
Lamontlandis@yahoo.com

Prepared For the County of San Diego

July 25, 2007 Revised April 15, 2010

Principal Author *Lamont Landis*

SDC DPLU RCVD 09-17-2010
TM5502RPL2

Table of Contents

1.0 Executive Summary 1

2.0 Introduction 1

2.1 Topography 1
2.2 Fire Department Location and Response Time 2
2.3 Wildfire History 2
2.4 Potential for Fire in the Area 2

3.0 Effect of the Project 2

3.1 Existing Onsite and Surrounding Area 2
3.2 Water Supply 3
3.3 Landscape Concept 3

4.0 Behave Plus Fire Modeling 3

4.1 BehavePlus Fire Model Table 1 4

5.0 Fuel Modification Zones 4

5.1 Landscape Requirements 5

6.0 Mitigation for Structures 5

7.0 Fuel Management Zones 6

7.1 Fuel Management Zone 1 6
7.2 Fuel Management Zone 2 7

8.0 North County Fire Protection District/ Fire Prevention Requirements 8

8.1 Purpose Policy and Authority 8

9.0 Fire Safe Community Planning 8

9.1 Landscape Requirements 9

10.0 Fire Access Rd. 9

10.1 Second Access 9

11.0 Fuel Modification Zone Maintenance Requirements 10

Appendices

Lamont Landis Fire Consultant

760-702-4370
Lamontlandis@adelphia.net

1.0 Executive Summary

The proposed project is a Tentative Map (TM 5502) that would divide a 31.9 acre lot into 14 parcels. The project is located south of the intersection of De Luz Road and Patton Oak Drive. The project encompasses steep hillsides and flat land with non-native grass and some mixed brush. The majority of this site is covered with Coastal Sage Scrub and grass. The surrounding property has Coastal Sage Scrub to the west, Avocado Groves to the north and urban developed to the east and south. Removal of the vegetation for this project will be a marked improvement it will substantially reduce the fire hazard in the area. The nearest fire protection for this project is North County Fire Station No. 1 and is 3 minutes away. This project does not require a second access (by code) however an emergency access will be provided as required by the North County Fire_Protection District. This Fire Protection Plan is in response to a request from the County of San Diego.

2.0 Introduction

This Fire Protection Plan/Fuel Management Plan (FMP) has been prepared for TM 5502, a 14-lot split with a residential development. This plan has been developed to protect the residential structures from potential radiant heat from wildfire hazards to the maximum extent practical. This plan does not guarantee that the structures will not burn, but greatly reduces that possibility. These are not shelter in place residences. A variety of factors have been incorporated into the Fuel Modification Plan including wildfire history, prevailing wind patterns, existing vegetation /fuel loading, terrain and adjacent vegetation/land use.

This project is within the North County Fire Protection District.
The project consists of approximately 31.9 acres.
The Tentative Parcel Map # is TM 5502
The APN# is 103-010-72
The number of lots will be 14
The types of occupancies are single-family residences.

2.1Topography

The project encompasses flat land, gentle slopes with gradual sloped hillside to the north and steep slopes to the east portions of the project. On site slopes are approximately vary from 5% to 50%. Off site slope to the north and east are approximately 20- 50 %, to the west and south 5% to 20%. The elevations range from 570 feet to 680 feet above sea level.

2.2 Fire Department Location and Response Time

Initial Fire Department response is from North County Fire Station No. 1 located at 315 Ivy Street; this station is staffed by six firefighters. Apparatus include one type one engine, one ambulance and one Battalion Chief. The station is located one mile from the above property and is 3.00 minutes away by using the estimated timetable in NFPA 1142. This complies with the General Plan for 2 acres but less than 4 acres.

2.3 Wildfire History

On February 10, 2002 the Gavilan Wildfire burned over 5,200 acres of natural open space and destroyed 43 structures in the western portion of Fallbrook and the Weapons Annex. Embers from the 50-mile per hour plus Santa Ana winds caused structures to be destroyed. The Gavilan Fire was driven by Santa Ana winds fueled by 50-year-old brush and an extended drought.

2.4 Potential for Fire in the Area

The site has the potential to experience a vegetation fire in its current vegetated state. This is based on the type of vegetation and its continuous nature, Santa Ana winds, high, temperatures, low humidity and drought conditions. The undeveloped property does pose a hazard from a wild-land fire.

3.0 Effect of the Project

The development of this area will reduce the spread of a wildfire by reducing the fuel loading, the addition of water supply (additional fire hydrants for fire fighting); improving of roads in the project and the clearing of home sites will provide additional fuel breaks in the area. The development of this site will significantly reduce the risk to life and property by removing the vegetation and the threat of wildfire from the property.

3.1 Existing Onsite and Surrounding Area Vegetation

On site vegetation consist of Avocado Trees, Non-Native Vegetation and Coastal Sage Scrub; most of the site is Disturbed Habitat, Southern Mixed Chaparral and Coast Live Oak Woodland. (See biological report for this project). The surrounding property has a mixture of vegetation; east of the project is Mixed Chaparral and Coast Live Oak Woodland, north of the project are orchards and vineyards with some urban developed land and is maintained annually. North on the property is Diegan Coastal Sage and Mixed Chaparral, west of the property is Diegan Coastal Sage and annual grasses, south of the site is urban-developed.

3.2 Water Supply

The water supply for this proposed project will come from an existing water main and will be extended into the project (Fallbrook Public Utility District). Domestic and fire flow systems will be designed to San Diego County and North County Fire Prevention requirements. Additional fire hydrants will be added to the new street in locations approved by the North County Fire Protection District and will be located before the curb radius of the turnaround with a fire flow of 2500 GPM @ 20 PSI. There will be five additional fire hydrants, one to the east end of Street A on Lot 11 on the north side of the street, one at the west end of Street A, one at each end of Street B prior to the cul-de-sac and one at Street A and De Luz Road .

3.3 Landscape Concept

A low fuel drought tolerant landscape concept has been designed for the proposed slopes. Low fuel, drought tolerant native plant species will be incorporated to the maximum extent possible. A plant species list is included in Appendix A.

The final landscape concept and plant palate shall be reviewed and approved by the San Diego County Department of Planning and Land Use and the North County Fire Protection District. Individual homeowners will be responsible for installing and maintaining their individual front, side and rear yard landscaping. All homeowner installed landscaping must be in accordance with the approved landscape species list.

4.0 BehavePlus Fire Modeling

The BehavePlus Fire Modeling System (Version 4.0.0) developed by the U.S. Forest Service/ Rocky Mountain Research Station is the generally accepted software for modeling large-scale wildfire behavior and characteristics. The BehavePlus system was designed to evaluate a variety of wildfire variables for large wildland fires including surface fire spread, safety zones, fire containment, spotting distance crown scorch and probability of ignition. Two aspects of this program (surface fire spread and safety zone) have been utilized to assist in determining acceptable fuel modification requirements. The BehavePlus program coupled with onsite and surrounding area vegetation, access, slope and weather conditions are the basis for the following.

The BehavePlus fire system has been run for the following worst-case scenarios:

60 MPH_wind, 88-degree ambient air temperature, 3 % dead fuel moisture, 60 % live fuel moisture and 50 % average slope aspect. The model was run for two fuel model scenarios as the project contains varying types of fuels.

It should be noted that the BehavePlus model does not and cannot include all variables associated with a specific site and regime, and adjacent mixed land uses can influence the results.

The BehavePlus model run results are summarized in Table 1.

Table 1

4.1 BehavePlus Fire Model

Fuel Model 1 [Short Grass (s)]

Wind Speed & Direction	Mid-flame	Rate of Spread	Fire Line Intensity	Flame Length
60 mph N, NE, E	18.0 mph	665.6 Ch/h	1415 Btu/ft/s	12.7 ft.

Up-slope spotting distance= 1.1 miles

Fuel Model sh7 Very High Load, Dry Climate Shrub (S) (147) (Southern Mixed Chaparral)

Wind Speed & Direction	Mid-flame	Rate of Spread	Fire Line Intensity	Flame Length
60 mph N, NE, E	30.0 mph	603.9 Ch/h	30751 Btu/ft/s	52.2 ft.

Up-slope spotting distance= 3.1 miles

Fuel Model 10 Timber with Under Story or Riparian Forest (Coast Live Oak Riparian Forest)

Wind Speed & Direction	Mid-flame	Rate of Spread	Fire Line Intensity	Flame Length
60 mph N,NE, E	18mph	99.4	2988 Btu/ft/s	17.9

Up-slope spotting distance 1.2 miles

Fuel Model Socal-18 - Diegan Coastal Sage Scrub

Wind Speed & Direction	Mid-flame	Rate of Spread	Fire Line Intensity	Flame Length
60mph N,NE, E	30.0 mph	2279.3 Ch/h	21994 Btu/ft/s	44.7 ft

Up-slope spotting distance= 2.8 miles

The Behave Plus coupled with the expected offshore Santa Ana wind direction, anticipated down slope fire line aspect and relatively low fuel vegetation within the urban wildland interface areas, and existing fuel modified areas serves as a basis for formulation of the recommended Fuel Modification Zone locations.

5.0 Fuel Modification Zones

A two tiered Fuel Modification Zone system is proposed to create an adequate fire safety buffer along the proposed development areas and access roads, which would be defensible space in case

of a wildfire. The Fuel Modification Zone recommendations are based upon a combination of BehavePlus modeling data, onsite vegetation, access, surrounding area fuel conditions, slope and worst-case weather conditions. The Fuel Modification Zones have been designed to meet the requirements of North County Fire Protection District and San Diego County DPLU.

5.1 Landscape Requirements

All landscaping within the Fuel Modification Zones must be approved by the North County Fire Protection District and shall include low fuel; drought tolerant plant species (see Appendix A). A landscape plan shall be submitted for approval and shall comply with the Fuel Modification Plan.

6.0 Mitigation for Structures

All new structures shall be equipped with the following interface features:

1. Roofs will be a Class "A" noncombustible material and shall meet the DPLU standards.
2. Eaves will be of noncombustible material and boxed.
3. Exterior walls will be a noncombustible or ignition resistive material.
4. All structures will be equipped with automatic fire sprinklers (NFPA 13D). All sprinkler systems shall be approved by the Fire Department prior to installation
5. All future outbuildings must be approved by the North County Fire Protection District prior to installation.
6. All structures shall use ember resistant vents approved by the North County Fire Protection District.
7. Provide the following enhanced fire resistive construction features that meet the County Fire and Building Code requirements for Wildland Urban Interface areas Chapter 7A, edition current at the time of a building permit application.

8. Provide the following enhanced fire resistive construction features and meet the County Fire and Building Code requirements for Wildland Urban Interface areas.

    A. Exterior walls of residence and garage must be non-combustible or ignition resistive material (stucco, masonry or approved cement fiberboard. No wood), and meet DPLU standards for fire prone areas.
    B. There shall be no paper faced insulation in the attic or other ventilated spaces.
    C. There shall be no plastic or vinyl on the exterior.
    D. Ventilation: No attic ventilation opening or louvers shall be permitted in soffits or overhanging areas. Attic or foundation ventilation openings or types of ventilation shall be covered with ¼ " mesh corrosion resistant or other approved equivalent protection. All attic ventilation shall comply with requirements of the building code. Vents shall not face any unmodified fuel that is not cleared 100 feet from the structure. All vents and their locations shall be approved by Building Official and the Fire Department and must be ember resistive.
    E. Exterior doors shall be not less than 20 min. fire rating. Minimum 1¾ inch solid core wood door, or approved non-combustible construction.

F. All projections shall be of non-combustible or ignition resistive construction, to include the following; exterior balconies, carports, decks, gazebos, patios covers, unenclosed roofs, floors and other outbuildings. Vinyl or plastic material is not allowed. All appendages and or projections from the structure shall be of like construction.
G. Wood or vinyl fencing or other attached items, the first five feet must be of ignition resistive construction or meet the same fire resistive standards as the exterior walls of the structure.
H. Spark arresters shall be installed on all chimneys and other vents on appliances as required per building and fire codes.
I. Windows are restricted to tempered glass, or dual-pane glass assemblies, or glass block. Vinyl window must have welded corners with metal reinforcing to prevent glass from falling out with flame impingement. Vinyl must be labeled showing ANSI/AAMA/NWWDA 101/I.S.2-97 structural requirements.

7.0 Fuel Management Zones:

Parcels: 2 to 8 and 13

The above mentioned parcels shall have the following zones defined as: 1 and 2 with a combined distance of 100 feet from the structure (as shown on the Fuel Modification Map). Zone 1 shall be the distance from the structure out to 50 feet (front, back and side yards). Zone 2 shall be the distance from 50 feet to 100 feet in all directions. All parcels where structures are adjacent to Fuel Models sh7, 10 and SoCal 18 and Mixed Chaparral there shall be a minimum of 100 feet total clearance as per this plan Zones 1 and 2 (as shown on the Fuel Modification Map). Those parcels where zones cross property lines shall be granted an easement to clear on to that property to the required distance to comply with the required fuel modification distance. When said property is built upon that property owner shall be responsible for maintaining the fuel in a manner that will be consistent with this plan.

Parcels: 1, 9, 10, 11, 12 and 14

These parcels zone 1 is from the structure to 50 feet. Zone 2 will be from 50 feet to the property line; this will result in fuel modification of more than 100 feet. This fuel modification is a result of the clustering of the home sites.

All distances are measured on a horizontal plane.

Fuel Management Zone 1:

Zone 1 is the first 50 feet or as otherwise indicated; this is an area where native vegetation has been removed, irrigated and planted with drought-tolerant and fire resistant plant material. Plant selection shall be from Appendix A (The San Diego County Acceptable Plant List).

The purpose of Zone 1 (set back zone) is to provide a defensible space for fire suppression forces to protect structures from radiant and convective heat. The following shall be part of fuel management of this zone:

1. No combustible construction, groves, firewood, propane tanks, fuel or combustible native or ornamental vegetation shall be allowed within the 50 foot set back Zone 1 or within 30 feet of the edge of slopes.
2. Mature trees (>18') to be limbed up or canopied 6' to 8'from ground level.
3. No tree limbs within 10' of chimney outlets or dead limbs overhanging structures.
4. Spacing between mature tree canopies must be as follows:
   A. Slopes 0-20 % ----10 Feet.
   B. Slopes 21-40 % ----20 Feet.
   C. Slopes > 41 % ----30 Feet.

The minimum horizontal space between the edges of shrubs
A. Slopes 0-20%----2 times the height of the shrub.
B. Slopes 21-40%----4 times the height of the shrub.
C. Slopes > 40%----6 times the height of the shrub.

The minimum vertical space between the top of the shrub and the bottom of the lower tree braches is 3 times the height of the shrub.

(Gilmer, M. 1994 California Wildfire Landscaping, adapted by the State Board of Forestry and Fire Protection on February 8, 2006.)

Fuel Management Zone 2

This Fuel Management Zone will be the area between 50 feet to 100 feet of the structure. The landscape plans shall include methods of erosion control to protect against slope failure. The following shall apply to Zone 2:

1. Clear 50% of the existing native combustible vegetation including all dead and dying. This area must be modified so combustible vegetation does not occupy more than 50% of the total square footage. Trees may remain provided that the horizontal distance between crowns of the adjacent trees is not less than 10 feet.
2. Orchards, groves and vineyards shall be maintained as per sec. 4707.3.2 of the San Diego County Fire Code adopted January 30, 2008.
3. Fire resistive plant materials are also required in Zone 2 to control soil erosion and/or to reduce vegetation mass near the wildland interface.
4. Plant spacing will be the same as noted for Zone 1.

Required Maintenance Beyond Fuel Modification Zones (Lots 1, 9, 10, 11, 12 and 14)

All remaining plants on site shall be maintained to a height of up to 18 inches and the native trees and aborescent native shrub species, (such as Oaks, Mexican Elderberry, Toyon, Mission

Manzanita, and Laurel Sumac that are over 6 feet in height and can be formed into trees) shall be trimmed 6 feet up from the ground. Trees must be separated by at least 1-1/2 the fully developed height of the retained tree canopies. All of the dead material must be removed annually or as required by the North County Fire Department.

The ground cover, native plants and grasses below the tree canopies shall be weed whipped and maintained at a height of 4 inches. Open areas resulting from plant removal (root system shall be left in tact) will be hydroseeded with a mix of native annual and perennial grasses. These grasses will be allowed to grow and produce seed during winter and spring. As grasses begin to cure (dry out) they will be cut 18 inches or less.

This additional clearing shall not go into the "Open Space".

8.0 North County Fire Protection District/Fire Prevention Requirements

The proposed project is subject to policies, guidelines and regulations contained in the North County Fire Protection District Ordinance and the San Diego County Fire Code, Section 4707 and the Vegetation Abatement in Sensitive Habitats Memorandum of Understanding. Specific fuel modification plan and vegetation management criteria are also promulgated in this section.

8.1 Purpose, Policy and Authority

The North County Fire Protection District fuel modification guidelines were created to provide fire protection services and greater public safety in areas prone to wildland brush fires, by establishing additional development standards for those areas. The Fuel Modification Plans are required in designated high fire hazard areas as mapped on the San Diego County General Plan Hazard Map (SANGIS), in conjunction with the California Department of Forestry and the United States Forest Service.

9.0 Fire Safe Community Planning

The proposed project has been designed to be a fire safe community with defensible space, and the creation of minimal wildland-urban interface areas, the fire access roads and a comprehensive Fuel Modification Plan. The proposed residential lots are adjacent to native and non-native vegetation with some developed property. Onsite and surrounding area native vegetation is considered high or very high fire hazard and has long flame lengths or intensity associated with Model sh7 Fuels. This fuel will be removed where required by the plan and will no longer pose a threat. The existing groves will be modified according to the plan and currently does not pose a threat. The onsite grassland associated with this property typically results in a slow burning and intensity (low flame length). High winds coupled with steep slopes and low humidity can increase the risk hazard of the fire. This type of vegetation is rarely associated with major conflagration resulting in property loss. The onsite wildfire risk to the proposed dwellings, based upon onsite and surrounding vegetation in conjunction with relatively steep west facing

slopes and prevailing Santa Ana wind pattern is considered to be high to very high, and will be mitigated with the implementation of a Fuel Modification Plan.

9.1 Landscape Requirements/Restrictions

The landscaping within the Fuel Modification Zones must be approved by the North County Fire Protection District and shall include low fuel, drought tolerant type vegetation from the list adopted by the County of San Diego (see Appendix A).

10.0 Fire Access Road

The proposed fire access road is designed to allow for egress for the public and fire fighting access for the Fire Department. All of the extension of the road on site shall be a minimum of 24 feet paved on 28 feet graded. The fuel modification on or adjacent to the road adds to the reduction of the spread of the fire and is part of the overall Fuel Modification Plan. All roads shall have a minimum clearance of 30 feet on each side of the new roads. Turnarounds on all lots shall comply with Appendix B. The proposed access roads shall meet or exceed all San Diego County DPLU and North County Fire Protection District requirements. All roads leading up to the project are paved. The road (De Luz Rd.) circulates in two directions onto other roads and meets the requirement for a second access. All lots are one acre plus and access from De Luz Road approximately 1,300 feet to the farthest lot. The maximum distance for lots above 1 acre less than 5 acres is 1,320 feet. All driveways or roads that exceed 15% of grade will be Portland cement concrete with a broom finish perpendicular to the direction of travel to enhance traction; no grade shall exceed 20% of grade, the angle of approach shall not exceed 7 Deg. All roads and driveways shall meet or exceed all San Diego County DPLU requirements. A Cul-de-sac as per Appendix B shall be in place at both ends of Street B.

10.1 Second Access

An extension and connection with Shady Lane is required by North County Fire Protection District and San Diego County. This will be via an access easement 40 feet in width to shady lane with an approved turnaround (as per Appendix B). The access road will be paved 24 feet on 28 feet graded as shown on the typical section. The on site road shall be connected to Shady Lane in a manner consistent with San Diego County Private Road Standards. An automatic gate shall be provided at the project boundary (at Shady Lane) that meets the North County Fire Protection District and San Diego County requirements. No grade shall exceed 20%. All grades over 15% shall be Portland concrete with approved cross broom for traction. The gate shall have approved equipment that will open when approached from either direction by a fire apparatus. The gate shall by the use of traffic signal pre-emption strobe light detection, close proximity public safety radio transition. The gate shall be automatic with battery backup, in case of a power failure or low battery the gate shall open and remain open. The gate shall be equipped with a fire agency key switch override. If exit loops that allow vehicles to pass through the gate from ether side are not installed the following shall apply: The gate will be signed on both sides with the following, FIRE LANE-No PARKING CVC 22500.1 and EMERGENCY EVACUATION ROUTE. Additional signage may be required by the fire authority. The gate must be maintained by the home owners association.

11.0 Fuel Modification Zone Maintenance Requirements

Fuel Modification Zones must be maintained in a manner that will fulfill the intent of the Fuel Modification Plan and meet the requirements of the North County Fire Protection District. Maintenance will include initial planting, weeding, irrigation installation and maintenance, plant pruning, removal of dead/down vegetation and the replacement of plants as required.

The following will also apply to this project:

1. Each lot owner is personally responsible for all irrigation and landscaping fuel treatment zones within their property boundaries. Where the zone extends onto the adjoining property within the development, the lot owner benefiting from the fuel treatment shall be allowed to perform work on the adjacent property.
2. The North County Fire Protection District will hold each lot owner within this subdivision accountable for enforcement of all wildland fire protection issues discussed in this plan.
3. Each lot owner shall not allow trash dumping or disposal of any yard trimmings in the Fuel Treatment Zones.
4. The North County Fire Protection District or its designated representative shall decide any disputes related to individual lot landscaping or fuel treatment, with respect to interpretation of the Fire Protection Plan. Decisions shall be final and binding on the lot owner.
5. Should modifications to the Tentative Map Plans occur, any and/or all of the Fire Protection Plan may be revised at the discretion of the North County Fire Protection District.
6. All exterior boundaries of Zones 2 shall be permanently marked on the ground for purposes of guiding annual fuel management maintenance and inspection operations. The most reliable markers are steel fence post with baked on painted finish. The upper half of the above ground portion of the fence post is then painted a bright "day glow" orange to improve visibility. These Fuel Treatment Zone Markers must be spaced so that the markers on each side of an installed marker can be seen from that marker. In addition to the markers signs shall be installed indicating that these are Parcels 1, 9, 10, 11, 12 and 14 are extended fuel modification zones
7. All lot owners will be required to participate in maintenance on the road and the 30 feet of vegetation clearance on both sides of the road on and off site to De Luz Road. There shall be a mechanism by which the maintenance shall be funded such as a home owners association and it shall in place prior to the final map being recorded. The home owners association shall participate in a fund for a fire inspector to ensure compliance.

NORTH COUNTY FIRE PROTECTION DISTRICT

330 S. Main Avenue • Fallbrook, California 92028-2938 • (760) 723-2005 • Fax (760) 723-2072 • www.nclfireprotectiondistrict.org

BOARD OF DIRECTORS

RUTH HARRIS
WAYNE HOOPER
KENNETH E. MUNSON
PAUL SCHADEN
KATHLEEN THUNER

WILLIAM R. METCALF - Fire Chief/CEO
wmetcalf@nclfire.org
ROBERT H. JAMES - Counsel
LOREN A. STEPHEN-PORTER - Board Secretary
lstephen@nclfire.org

July 23, 2010

County of San Diego
Department of Planning and Land Use
5201 Ruffin Road, Suite B.,
San Diego, CA. 92123

RE: TM 5502

The revised Fire Protection Plan dated April 15, 2010 is approved by this agency. This project had prior approval and then was changed to a conservation development which clustered the homes at the top of a chimney. This area burned during the Gavilan Fire and aligns with the Santa Margarita drainage to the west. The clustering of homes at the top of the saddle resulted in the expanded fuel modification zones for lots 1, 9, 10, 11, 12 and 14. Although the access road length is not excessive per the consolidated code this agency has required the applicant to install an emergency evacuation gate at the connection to Shady Lane. This gate will expedite emergency crew response from station 1 and assist with evacuation of the development.

Sid Morel
Fire Marshal

Appendix Table of Contents

Appendix A Acceptable Plant List
Undesirable Plant list

Appendix B Fire Apparatus turnaround Configurations

Appendix C Photos

Appendix D Behaveplus 3 Fire Model

Appendix E Literature and Codes

Appendix F Aerial Photos

Appendix G Vegetation Map

Appendix H Fuel Modification Map

Appendix A

Undesirable Plant List

Acceptable Plants for A Defensible Space In Fire Prone Areas

SUGGESTED PLANT LIST FOR A DEFENSIBLE SPACE

BOTANICAL NAME	COMMON NAME	Climate Zone
TREES		
Acer		
platanoides	Norway Maple	M
rubrum	Red Maple	M
saccharinum	Silver Maple	M
saccarum	Sugar Maple	M
macrophyllum	Big Leaf Maple	C/ (R)
Alnus rhombifolia	White Alder	C/I/M (R)
Arbutus		
unedo	Strawberry Tree	All zones
Archontophoenix		
cunninghamiana	King Palm	C
Arctostaphylos spp.**	Manzanita	C/I/D
Brahea		
armata	Blue Hesper Palm	C/D
edulis	Guadalupe Palm	C/D
Ceratonia siliqua	Carob	C/I/D
Cerdidium floridum	Blue Palo Verde	D
Cercis occidentalis**	Western Redbud	C/I/M
Cornus		
nuttallii	Mountain Dogwood	I/M
stolonifera	Redtwig Dogwood	I/M
Eriobotrya		C/I/D
japonica	Loquat	C
Erythrina caffra	Kaffirboom Coral Tree	I/M
Gingko biloba "Fairmount"	Fairmount Maidenhair Tree	I/D/M
Gleditisia triacanthos	Honey Locust	
Juglans		I
californica	California Walnut	C/I
hindsii	California Black Walnut	I/D/M
Lagerstroemia indica	Crape Myrtle	I
Ligustrum lucidum	Glossy Privet	C/I/M
Liquidambar styraciflua	Sweet Gum	I
Liriodendron tulipifera	Tulip Tree	
Lyonothamnus floribundus		C
ssp. Asplenifolius	Fernleaf Catalina Ironwood	C/I/D
Melaleuca spp.	Melaleuca	C/I
Parkinsonia aculeate	Mexican Palo Verde	
Pistacia	Chinese Pistache	
chinensis	Pistachio Nut	C/I/D

vera	Pistachio Nut	I
Pittosporum		
phillyraeoides	Willow Pittosporum	C/I/D
viridiflorum	Cape Pittosporum	C/I
Platanus		
acerifolia	London Plane Tree	All zones
racemosa**	California Sycamore	C/I/M
Populus		
alba	White Poplar	D/M
fremontii**	Western Cottonwood	I
trichocarpa	Black Cottonwood	I/M
Prunus		
xblireiana	Flowering Plum	M
caroliniana	Carolina Laurel Cherry	C
ilicifolia**	Hollyleaf Cherry	C
lyonii**	Catalina Cherry	C
serrulata 'Kwanzan'	Flowering Cherry	M
yedoensis 'Akebono'	Akebono Flowering Cherry	M
Quercus		
agrifolia**	Coast Live Oak	C/I
engelmannii	Engelmann Oak	I
** suber	Cork Oak	C/I/D
Rhus		
lancea**	African Sumac	C/I/D
Salix spp.**	Willow	All zones (R)
Tristania conferta	Brisbane Box	C/I
Ulmus		
parvifolia	Chinese Elm	I/D
pumila	Siberian Elm	C/M
Umbellularia californica**	California Bay Laurel	C/I

SHRUBS

Agave	Century Plant	D
americana	Century Plant	D
deserti	Shawis Century Plant	D
shawi**		
Amorpha fruticosa**	False Indigobush	I
Arbutus		
menziesii**	Madrone	C/I
Arctostaphylos spp.**	Manzanita	C/I/D
Atriplex**		
canescens	Hoary Saltbush	I
lentiformis	Quail Saltbush	D
Baccharis**		
glutinosa	Mule Fat	C/I
pilularis	Coyote Bush	C/I/D
Carissa grandiflora	Natal Plum	C/I
Ceanothus spp.**	California Lilac	C/I/M
Cistus spp.	Rockrose	C/I/D
Cneoridium dumosum**	Bushrue	C
Comarostaphylis**		
diversifolia	Summer Holly	C
Convolvulus cneorum	Bush Morning Glory	C/I/M
Dalea		
orcuttii	Orcutt's Delea	D
spinosa**	Smoke Tree	I/D
Elaeagnus		
pungens	Silverberry	C/I/M
Encelia**		
californica	Coast Sunflower	C/I
farinose	White Brittlebush	D/I
Eriobotrya		
deflexa	Bronze Loquat	C/I
Eriophyllum		
confertiflorum**	Golden Yarrow	C/I
staechadifolium	Lizard Tail	C
Escallonia spp.	Escallonia	C/I
Feijoa sellowiana	Pineapple Guava	C/I/D
Fouqueria splendens	Ocotillo	D
Fremontodendron**		
californicum	Flannelbush	I/M
mexicanum	Southern Flannelbush	I
Galvezia		
juncea	Baja Bush-Snapdragon	C
speciosa	Island Bush-Snapdragon	C
Garrya		
elliptica	Coast Silktassel	C/I
flavescens**	Ashy Silktassel	I/M

Heteromeles arbutifolia**	Ashy Silktassel	I/M
Lantana spp.	Toyon	C/I/M
Lotus scoparius	Lantana	C/I/D
Mahonia spp.	Deerweed	C/I
	Barberry	C/I/M
Malacothamnus		
clementinus		
	San Clemente Island Bush Mallow	C
fasciculatus**		
	Mesa Bushmallow	C/I
Melaleuca spp.		
Mimulus spp.**	Melaleuca	C/I/D
Nolina	Monkeyflower	C/I (R)
parryi		
parryi ssp. wolfii	Parry's Nolina	I
Photinia spp.	Wolf's Bear Grass	D
Pittosporum	Photinia	All Zones
crassifolium		
rhombifolium		CI/I
tobira 'Wheeleri'	Queensland Pittosporum	C/I
undulatum	Wheeler's Dwarf	C/I/D
viridiflorum	Victorian Box	C/I
Plumbago auriculata	Cape Pittosporum	C/I
Prunus	Cape Plumbago	C/I/D
caroliniana		
ilicifolia**	Carolina Laurel Cherry	C
lyonii**	Hollyleaf Cherry	C
Puncia granatum	Catalina Cherry	C
Pyracantha spp.	Pomegranate	C/I/D
Quercus	Firethorn	All Zones
dumosa**		
Rhamus	Scrub Oak	C/I
alaternus		
californica**	Italian Blackthorn	C/I
Rhaphiolepis spp.	Coffeeberry	C/I/M
Rhus	Rhaphiolepis	C/I/D
integrifolia**		
laurina	Lemonade Berry	C/I
lentii	Laurel Sumac	C/I
ovata**	Pink-Flowering Sumac	C/D
trilobata**	Sugarbush	I/M
Ribes	squawbush	I
viburnifolium		
speciosum**	Evergreen Currant	C/I
Romneya coulteri	Fuschia-Flowering Gooseberry	C/I/D
Rosa	Matilija Poppy	I
californica**		
minutifolia		

Salvia spp.**	California Wild Rose	C/I
Sambucus spp.**	Baja California Wild Rose	C/I
Symphoricarpos mollis**	Sage	All Zones
Syringa vulgaris	Elderberry	C/I/M
Tecomaria capensis	Creeping Snowberry	C/I
Teucrium fruticans	Lilac	M
Toxicodendron**	Cape Honeysuckle	C/I/D
diversilobum	Bush Germander	C/I
Verbena		
lilacina	Poison Oak	I/M
Xylosma congestum		
Yucca**	Lilac Verbena	C
schidigera	Shiny Xylosma	C/I
whipplei		
	Mojave Yucca	D
	Foothill Yucca	I

GROUNDCOVERS

Achillea**	Yarrow	All Zones
Aptenia cordifolia	Apteria	C
Arctostaphylos spp.**	Manzanita	C/I/D
Baccharis**		
pilularis	Coyote Bush	C/I/D
Ceanothus spp.**	California Lilac	C/I/M
Cerastium tomentosum	Snow-in-Summer	All Zones
Coprosma kirkii	Creeping Coprosma	C/I/D
Cotoneaster spp.	Redberry	All Zones
Drosanthemum hispidum	Rosea Ice Plant	C/I
Dudleya		
brittonii	Brittonis Chalk Dudleya	C
pulverulenta**	Chalk Dudleya	C/I
virens	Island Live Fore-ever	C
Eschscholzia californica**	California Poppy	All Zones
Euonymus fortunei		
'Carrierei'	Glossy Winter Creeper	M
'Coloratus'	Purple-Leaf Winter Creeper	M
Ferocactus viridescens**	Coast Barrel Cactus	C
Gaillardia grandiflora	Blanket Flower	All Zones
Gazania spp.	Gazania	C/I
Helianthemum spp.**	Sunrose	All Zones
Lantana spp.	Lantana	C/I/D
Lasthenia		
californica**	Common Goldfields	I
glabrata	Coastal Goldfields	C
Lupinus spp.**	Lupine	C/I/M
Myoporum spp.	Myoporum	C/I
Pyracantha spp.	Firethorn	All zones
Rosmarinus officinalis	Rosemary	C/I/D
Santolina		
chamaecyparissus	Lavender Cotton	All Zones
virens	Santolina	All Zones
Trifolium frageriferum	O'Connor's Legume	C/I
Verbena		
rigida	Verbena	All Zones
Viguiera laciniata**	San Diego Sunflower	C/I
Vinca		
minor	Dwarf Periwinkle	M

VINES

Antigonon leptopus	San Miguel Coral Vine	C/I
Distictis buccinatoria	Blood-Red Trumpet Vine	C/I/D
Keckiella cordifolia**	Heart-Leaved Penstemon	C/I
Lonicera		
japonica 'Halliana'	Hall's Honeysuckle	All Zones
subspicata**	Chaparral Honeysuckle	C/I
Solanum		
jasminoides	Potato Vine	C/I/D

PERENNIALS

Coreopsis		
gigantean	Giant Coreopsis	C
grandiflora	Coreopsis	All Zones
maritime	Sea Dahlia	C
verticillata	Coreopsis	C/I
Heuchera maxima	Island Coral Bells	C/I
Iris douglasiana**	Douglas Iris	C/M
Iva hayesiana**	Poverty Weed	C/I
Kniphofia uvaria	Red-Hot Poker	C/M
Lavandula spp.	Lavender	All Zones
Limonium californicum		
var. mexicanum	Coastal Statice	C
perezii	Sea Lavender	C/I
Oenothera spp.	Primrose	C/I/M
Penstemon spp.**	Penstemon	C/I/D
Satureja douglasii	Yerba Buena	C/I
Sisyrinchium		
bellum	Blue-Eyed Grass	C/I
californicum	Golden-Eyed Grass	C
Solanum		
xantii	Purple Nightshade	C/I
Zauschneria**		
californica	California Fuschia	C/I
cana	Hoary California Fuschia	C/I
'Catalina'	Catalina Fuschia	C/I

ANNUALS

Lupinus spp.**	Lupine	C/I/M

UNDESIRABLE PLANT LIST

The following species are highly flammable and should be avoided when planting within the first 50 feet adjacent to a structure. The plants listed below are more susceptible to burning, due to rough or peeling bark, production of large amounts of litter, vegetation that contains oils, resin, wax, or pitch, large amounts of dead material in the plant, or plantings with a high dead to live fuel ratio. Many of these species, if existing on the property and adequately maintained (pruning, thinning, irrigation, litter removal, and weeding), may remain as long as the potential for spreading a fire has been reduced or eliminated.

BOTANICAL NAME	COMMON NAME
Abies species	Fir Trees
Acacia species	Acacia (trees, shrubs, groundcovers)
*Adenostoma sparsifolium***	Red Shanks
*Adenostoma fasciculatum***	Chamise
Agonis juniperina	Juniper Myrtle
Araucaria species	Monkey Puzzle, Norfolk Island Pine
*Artemesia californica***	California Sagebrush
Bambusa species	Bamboo
Cedrus species	Cedar
Chamaecyparis species	False Cypress
Coprosma pumila	Prostrate Coprosma
Cryptomeria japonica	Japanese Cryptomeria
Cupressocyparis leylandii	Leylandii Cypress
*Cupressus forbesii***	Tecate Cypress
Cupressus glabra	Arizona Cypress
Cupressus sempervirens	Italian Cypress
Dodonea viscosa	Hopseed Bush
*Eriogonum fasciculatum***	Common Buckwheat
Eucalyptus species	Eucalyptus
*Heterotheca grandiflora***	Telegraph Plant
Juniperus species	Junipers
Larix species	Larch
Lonicera japonica	Japanese Honeysuckle
Miscanthus species	Eulalia Grass
*Muehlenbergia species***	Deer Grass
Palmae species	Palms
Picea species	Spruce Trees
*Pickeringia Montana***	Chaparral Pea
Pinus species	Pines
Podocarpus species	Fern Pine
Pseudotsuga menziesii	Douglas Fir
Rosmarinus species	Rosemary
*Salvia mellifera***	Black Sage
Taxodium species	Cypress
Taxus species	Yew
Thuja species	Arborvitae
Tsuga species	Hemlock
*Urtica urens***	Burning Nettle

** San Diego County native species

References: Gordon, H. White, T.C. 1994. Ecological Guide to Southern California Chaparral Plant Series. Cleveland National Forest.

Willis, E. 1997. San Diego County Fire Chief's Association. Wildland/Urban Interface Development Standards

City of Oceanside, California. 1995. Vegetation Management. Landscape Development Manual. Community Services Department, Engineering Division.

City of Vista, California 1997. Undesirable Plants. Section 18.56.999. Landscaping Design, Development and Maintenance Standards.

www.bewaterwise.com. 2004. Fire-resistant California Friendly Plants.

www.ucfpl.ucop.edu. 2004. University of California, Berkeley, Forest Products Laboratory, College of Natural Resources. Defensible Space Landscaping in the Urban/Wildland Interface. A Compilation of Fire Performance Ratings of Residential Landscape Plants.

County of Los Angeles Fire Department. 1998. Fuel Modification Plan Guidelines. Appendix I, Undesirable Plant List, and Appendix II, Undesirable Plant List.

INVASIVE PLANT LIST

The following species are considered invasive (i.e., those capable of reproducing and spreading into native, non-irrigated areas and displacing those communities). Non-native plant species are prohibited in all areas adjacent to open space lands. Noxious weeds that have been introduced to San Diego County over the years tend to be more widespread and therefore more difficult to contain. The plants listed below have been identified as invasive and/or as noxious weeds and should not be planted or allowed to sprout in any transitional landscapes (landscapes planted with non-native species next to undeveloped areas).

BOTANICAL NAME	COMMON NAME
Ailanthus altissima	Tree of Heaven
*Anthemis cotula****	Mayweed, Stinking Chamolile
Arctotheca calendola	Cape Weed
Arundo donax	Giant Cane
Atriplex semibaccata	Australian Saltbush
*Brassica species****	Mustard
*Cardaria draba****	Hoary Cress, Perennial Peppergrass
Carpobrotus edulis	Ice Plant
Centaurea solstitialis	Yellow Starthistle
*Cirsium vulgare****	Wild Artichoke
Conium maculatum	Poison Hemlock
*Conyza Canadensis****	Horseweed
Cortaderia selloana	Pampas Grass
Cotoneaster lacteus	Cotoneaster
Cupressus macrocarpa	Monterey Cypress
*Cynara cardunculus****	Artichoke Thistle
Cytisus species	Scotch Broom, French Broom, etc
Elaeagnus angustifolia	Russian Olive
Eucalyptus globulus	Eucalyptus Blue Gum
*Gensita species****	Broom
Hedera helix	English Ivy
Hypericum perforatum	St. John's Wort
Ilex aquifolium	English Holly
*Lactuca serriola****	Prickly Lettuce
Lepidium latifolium	Perennial Pepperweed
Myoporum parvifolium	Trailing Myoporum
Nerium oleander	Oleander
Nicotiana species	Tree Tobacco
Olea europaea	Olive
Pennisetum setaceum	Fountain Grass
Ricinus communis	Castor Bean
Robinia pseudoacacia	Black Locust
*Salsola australis****	Russian Thistle, Tumbleweed
Schinus molle	California Pepper
Schinus terebinthifolius	Brazilian Pepper
*Silybum marianum****	Milk Thistle
Spartium junceum	Spanish Broom

Tamarix species	Tamarisk
*Ulex europea****	Gorse
Vinca major	Periwinkle

*** Introduced Weeds to San Diego County

References: Bell, Carl, Regional Advisor – Invasive Plants. 2004. University of California Cooperative Extension.

California Exotic Pest Plant Council. October, 1999. Exotic Pest Plants of Greatest Ecological Concern in California. Most Invasive Wildland Pest Plants. www.caleppc.org/info/99lista.html.

Appendix B

Fire Apparatus Turnaround Configurations

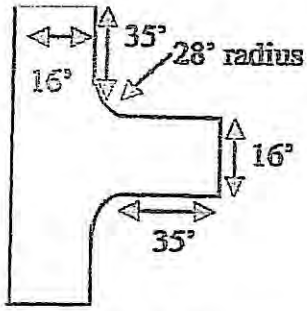

Private Driveway Hammerhead

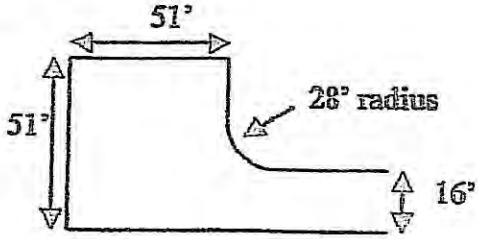

Alternate Private Driveway Hammerhead

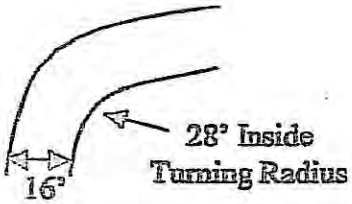

Private Road or Driveway Cul-de-sac

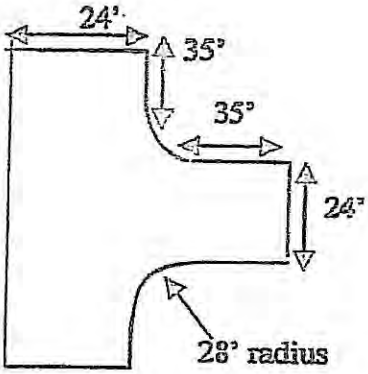

Private Road Hammerhead

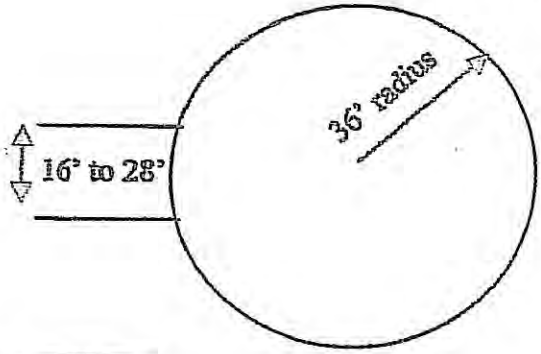

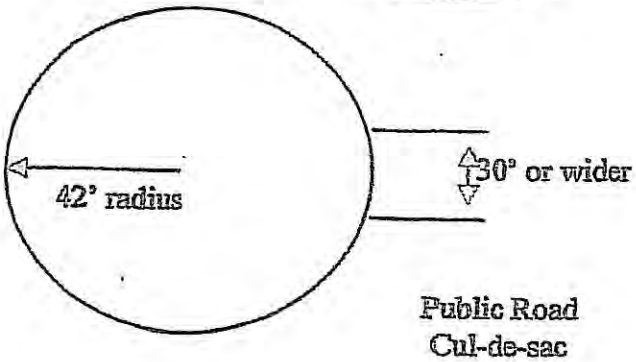

Public Road Cul-de-sac

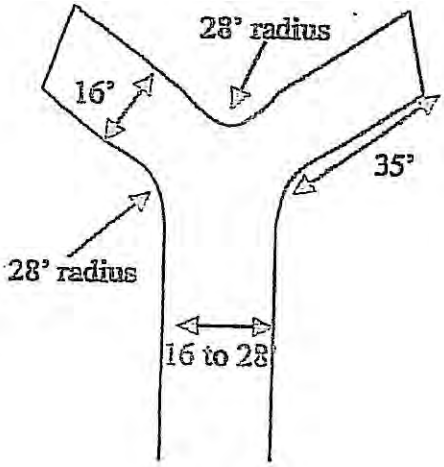

Hammerhead Incorporating Radius

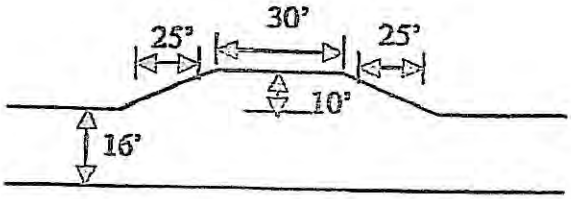

Turnout—Required for driveways In excess of 300-400'

NOT TO SCALE

(OVER)

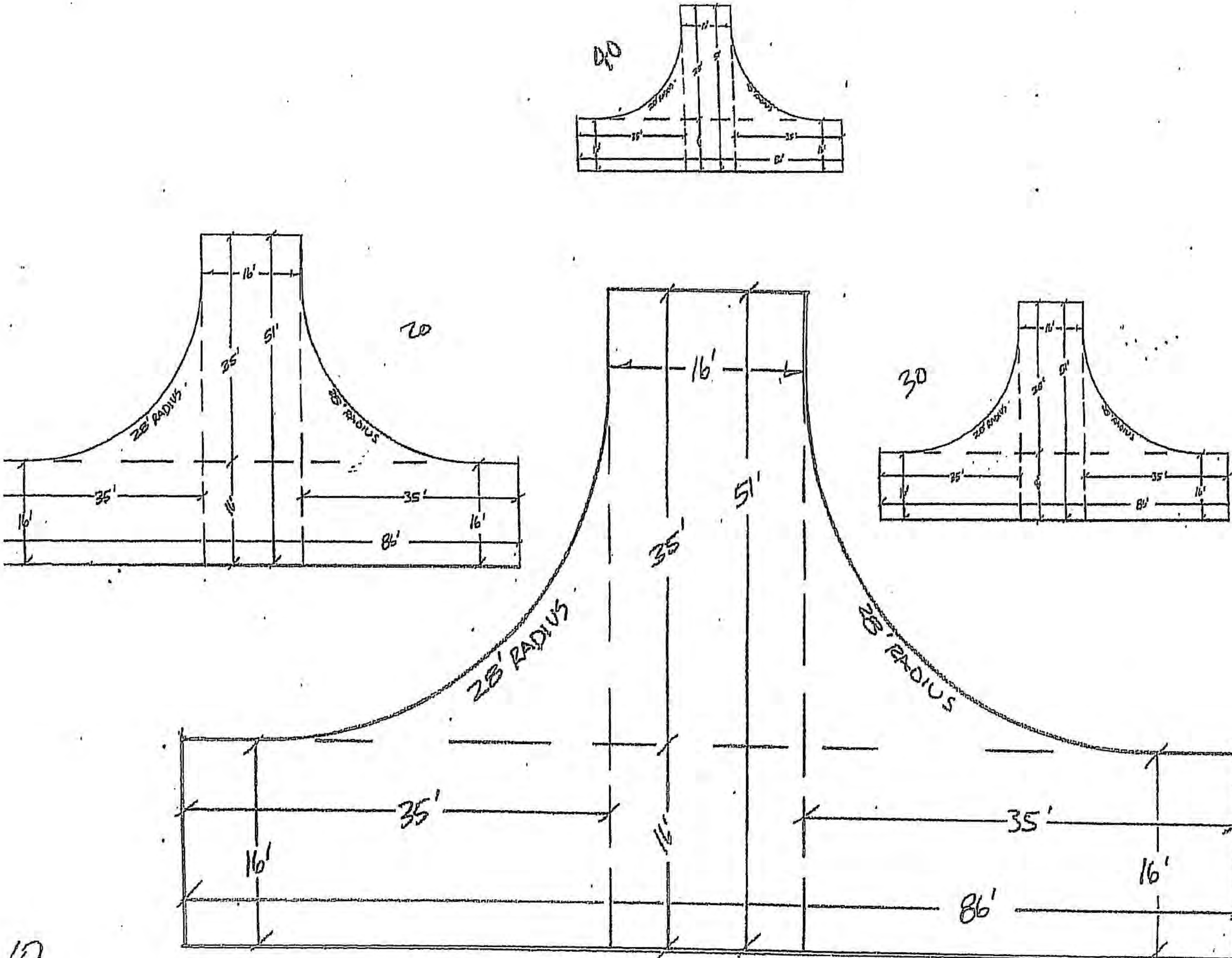

17

Appendix C

Photos

north of project

north of project

north portion of project

west portion of project

south potion of project

east portion of project

east portion of project

north portion of project

Appendix D

Behaveplus3.0.2 Fire Model

Modules: SURFACE, SPOT, IGNITE

Description		APN 103-010-72
Fuel/Vegetation, Surface/Understory		
Fuel Model		1
Fuel/Vegetation, Overstory		
Canopy Height	ft	1
Fuel Moisture		
1-h Moisture	%	2
10-h Moisture	%	
100-h Moisture	%	
Live Herbaceous Moisture	%	
Live Woody Moisture	%	
Weather		
20-ft Wind Speed (upslope)	mi/h	60
Wind Adjustment Factor		0.3
Air Temperature	oF	88
Fuel Shading from the Sun	%	20
Terrain		
Slope Steepness	%	50
Ridge-to-Valley Elevation Difference	ft	50
Ridge-to-Valley Horizontal Distance	mi	0.1
Spotting Source Location		MW

Run Option Notes

Calculations are only for the direction of maximum spread [SURFACE].

Fireline intensity, flame length, and spread distance are always for the direction of the spread calculations [SURFACE].

Wind is blowing upslope [SURFACE].

Output Variables

Surface Rate of Spread (maximum) (ch/h) [SURFACE]

Fireline Intensity (Btu/ft/s) [SURFACE]

Flame Length (ft) [SURFACE]

Midflame Wind Speed (upslope) (mi/h) [SURFACE]

Wind Adjustment Factor [SURFACE]

(continued on next page)

Input Worksheet (continued)

Spot Dist from Wind Driven Surface Fire (mi) [SPOT]

Probability of Ignition from a Firebrand (%) [IGNITE]

Notes

APN 103-010-72

Surface Rate of Spread (maximum)	665.6	ch/h
Fireline Intensity	1415	Btu/ft/s
Flame Length	12.7	ft
Midflame Wind Speed (upslope)	18.0	mi/h
Wind Adjustment Factor	0.3	
Spot Dist from Wind Driven Surface Fire	1.1	mi
Probability of Ignition from a Firebrand	100	%

Discrete Variable Codes Used
APN 103-010-72

Fuel Model

1	Short grass (S)

Spotting Source Location

MW	Midslope, Windward

Modules: SURFACE, SPOT, IGNITE

Description		

Fuel/Vegetation Surface/Understory

Fuel Model		4

Fuel/Vegetation Overstory

Canopy Height	ft	6

Fuel Moisture

1-h Moisture	%	2
10-h Moisture	%	3
100-h Moisture	%	5
Live Herbaceous Moisture	%	
Live Woody Moisture	%	60

Weather

20-ft Wind Speed (upslope)	mi/h	60
Wind Adjustment Factor		0.5
Air Temperature	oF	88
Fuel Shading from the Sun	%	20

Terrain

Slope Steepness	%	50
Ridge-to-Valley Elevation Difference	ft	50
Ridge-to-Valley Horizontal Distance	mi	.1
Spotting Source Location		MW

Run Option Notes

Calculations are only for the direction of maximum spread [SURFACE].

Fireline intensity, flame length, and spread distance are always for the direction of the spread calculations [SURFACE].

Wind is blowing upslope [SURFACE].

Output Variables

Surface Rate of Spread (maximum) (ch/h) [SURFACE]

Fireline Intensity (Btu/ft/s) [SURFACE]

Flame Length (ft) [SURFACE]

Midflame Wind Speed (upslope) (mi/h) [SURFACE]

Wind Adjustment Factor [SURFACE]

(continued on next page)

Input Worksheet (continued)

Spot Dist from Wind Driven Surface Fire (mi) [SPOT]

Probability of Ignition from a Firebrand (%) [IGNITE]

Notes

Surface Rate of Spread (maximum)	1690.3	ch/h
Fireline Intensity	104485	Btu/ft/s
Flame Length	91.6	ft
Midflame Wind Speed (upslope)	30.0	mi/h
Wind Adjustment Factor	0.5	
Spot Dist from Wind Driven Surface Fire	4.5	mi
Probability of Ignition from a Firebrand	100	%

Discrete Variable Codes Used

Fuel Model

4	Chaparral (S)

Spotting Source Location

MW	Midslope, Windward

Modules: SURFACE, SPOT, IGNITE

Description		APN 103-010-72

Fuel/Vegetation, Surface/Understory

Fuel Model		10

Fuel/Vegetation, Overstory

Canopy Height	ft	20

Fuel Moisture

1-h Moisture	%	2
10-h Moisture	%	3
100-h Moisture	%	5
Live Herbaceous Moisture	%	
Live Woody Moisture	%	50

Weather

20-ft Wind Speed (upslope)	mi/h	60
Wind Adjustment Factor		0.3
Air Temperature	oF	88
Fuel Shading from the Sun	%	20

Terrain

Slope Steepness	%	50
Ridge-to-Valley Elevation Difference	ft	50
Ridge-to-Valley Horizontal Distance	mi	0.1
Spotting Source Location		MW

Run Option Notes

Calculations are only for the direction of maximum spread [SURFACE].

Fireline intensity, flame length, and spread distance are always for the direction of the spread calculations [SURFACE].

Wind is blowing upslope [SURFACE].

Output Variables

Surface Rate of Spread (maximum) (ch/h) [SURFACE]

Fireline Intensity (Btu/ft/s) [SURFACE]

Flame Length (ft) [SURFACE]

Midflame Wind Speed (upslope) (mi/h) [SURFACE]

Wind Adjustment Factor [SURFACE]

(continued on next page)

Input Worksheet (continued)

Spot Dist from Wind Driven Surface Fire (mi) [SPOT]

Probability of Ignition from a Firebrand (%) [IGNITE]

Notes

APN 103-010-72

APN 103-010-72

Surface Rate of Spread (maximum)	99.4	ch/h
Fireline Intensity	2988	Btu/ft/s
Flame Length	17.9	ft
Midflame Wind Speed (upslope)	18.0	mi/h
Wind Adjustment Factor	0.3	
Spot Dist from Wind Driven Surface Fire	1.2	mi
Probability of Ignition from a Firebrand	100	%

Discrete Variable Codes Used

APN 103-010-72 APN 103-010-72

Fuel Model

10	Timber with litter & understory (S)

Spotting Source Location

MW	Midslope, Windward

Modules: SURFACE, SPOT, IGNITE

Description

Fuel/Vegetation, Surface/Understory

Fuel Model		SCAL18

Fuel/Vegetation, Overstory

Canopy Height	ft	0

Fuel Moisture

1-h Moisture	%	2
10-h Moisture	%	3
100-h Moisture	%	5
Live Herbaceous Moisture	%	60
Live Woody Moisture	%	60

Weather

20-ft Wind Speed (upslope)	mi/h	60
Wind Adjustment Factor		0.5
Air Temperature	oF	88
Fuel Shading from the Sun	%	0

Terrain

Slope Steepness	%	50
Ridge-to-Valley Elevation Difference	ft	50
Ridge-to-Valley Horizontal Distance	mi	.1
Spotting Source Location		MW

Run Option Notes

Calculations are only for the direction of maximum spread [SURFACE].

Fireline intensity, flame length, and spread distance are always for the direction of the spread calculations [SURFACE].

Wind is blowing upslope [SURFACE].

Output Variables

Surface Rate of Spread (maximum) (ch/h) [SURFACE]

Heat per Unit Area (Btu/ft2) [SURFACE]

Fireline Intensity (Btu/ft/s) [SURFACE]

Flame Length (ft) [SURFACE]

Direction of Maximum Spread (from upslope) (deg) [SURFACE]

(continued on next page)

Input Worksheet (continued)

Midflame Wind Speed (upslope) (mi/h) [SURFACE]

Wind Adjustment Factor [SURFACE]

Spot Dist from Wind Driven Surface Fire (mi) [SPOT]

Probability of Ignition from a Firebrand (%) [IGNITE]

Notes

Surface Rate of Spread (maximum)	279.3	ch/h
Heat per Unit Area	4295	Btu/ft2
Fireline Intensity	21994	Btu/ft/s
Flame Length	44.7	ft
Direction of Maximum Spread (from upslope)	0	deg
Midflame Wind Speed (upslope)	30.0	mi/h
Wind Adjustment Factor	0.5	
Spot Dist from Wind Driven Surface Fire	2.8	mi
Probability of Ignition from a Firebrand	100	%

Discrete Variable Codes Used

Fuel Model

SCAL18 Sage / Buckwheat

Spotting Source Location

MW Midslope, Windward

Appendix E

Literature and Code Reference

1. Behave: Fire Behavior Prediction and Fuel Modeling – Burn Subsystems. Part 1 General Technical Report INT-194. January 1986. Patricia L. Andrews USDA Forest Service, Intermountain Station, Ogden Utah, 84401.
2. Behave: Fire Behavior Prediction and Fuel Modeling- Burn Subsystem Part 2. General Technical Report INT-360. May 1989 Patricia L. Andrews and Carolyn H. Chase. USDA Forest Service. Intermountain Station, Ogden, Utah 84401.
3. BehavePlus Fire Modeling System, Version 3.02 Patricia L. Andrews, Collins D. Bevins and Robert C. Seli. US Forest Services, Rocky Mountain Research Station, Fire Sciences Laboratory. Missoula MT.
4. How to Predict the Spread and Intensity of Forest and Range Fires. General Technical Report INT-1943 May 1989. Richard C. Rothermel, USDA Forest Service Intermountain Station, Ogdan Utah, 84401.
5. 2007 California Fire Code, California Code of Regulations Title 24 Part 9. Which is based on the 2006 International Fire Code,
6. County of San Diego Fire Code and Building Code and Amendments Effective January 30, 2008. Section 96.1.001
7. National Fire Protection Association NFPA 1142 Water Supplies for Suburban and Rural Firefighting 2001 Addition.
8. International Code Council Urban-Wildland Interface Code 2006 edition
9. Standard Fire Behavior Fuel Models: A Comprehensive Set For Use with Rothermel's Surface Fire Spread Model. Authors Joe H. Scott and Robert E. Burgan General Technical Report RMRS-GTR-153 USDA Forest Service Rocky Mountain Research Station.
10. Aids for Determining Fuel Models for Estimating Fire Behavior. By Hal E Anderson USDA Forest Service General Technical Report INT-122
11. General Guidelines for Creating Defensible Space Adopted by The State Board of Forestry and Fire Protection on February 8, 2008

Appendix F

Aerial Photos

Shady Ln
MAPQUEST

Appendix G

Vegetation Map

BIOLOGICAL RESOURCES MAP
BALDWIN PROJECT
TM 5502 RPL - APN 103-010-72

EXISTING, IMPACTED, AND PRESERVED HABITAT ON THE PROJECT SITE

PLANT COMMUNITY	ACREAGE ON-SITE	ACREAGE IMPACTED ON-SITE	ACREAGE IMPACTED OFF-SITE	ACREAGE PRESERVED ON-SITE	TOTAL MITIGATION REQUIRED (Ratio)	ON-SITE MITIGATION	OFF-SITE MITIGATION
DIEGAN COASTAL SAGE SCRUB	3.23	0	0	3.23	0	0	0
DISTURBED HABITAT	[illegible]	N/A	N/A	N/A	0	0	0
ORCHARDS AND VINEYARDS	[illegible]	N/A	0	0	0	0	0
URBAN / DEVELOPED	4.15	N/A	N/A	N/A	0	0	0
SOUTHERN COAST LIVE OAK RIPARIAN FOREST	0.18	0	0.00	0.18	0.90 (3:1)	0*	0.90
GRANITIC CHAMISE CHAPARRAL	0.03	0.01	0	4.82	0.09 (3:1)	0.09	0
COAST LIVE OAK WOODLAND	0.44	0	0.33	0.44	1.14 (3:1)	0*	1.14
TOTAL	31.90	1.24	0.05	6.50	2.73	0.09	2.04

BIOLOGICAL RESOURCES AND PROPOSED BIOLOGICAL OPEN SPACE EASEMENT MAP PREPARED BY:

WILLIAM T. EVERETT
EVERETT AND ASSOCIATES
ENVIRONMENTAL CONSULTANTS
POST OFFICE BOX 8123
LA JOLLA, CALIFORNIA

BASE MAP PREPARED BY:

HADLEY JOHNSON, R.C.E. 14870
KARN ENGINEERING AND SURVEYING
129 W. FIG STREET
FALLBROOK, CALIFORNIA 92028
760-728-1134

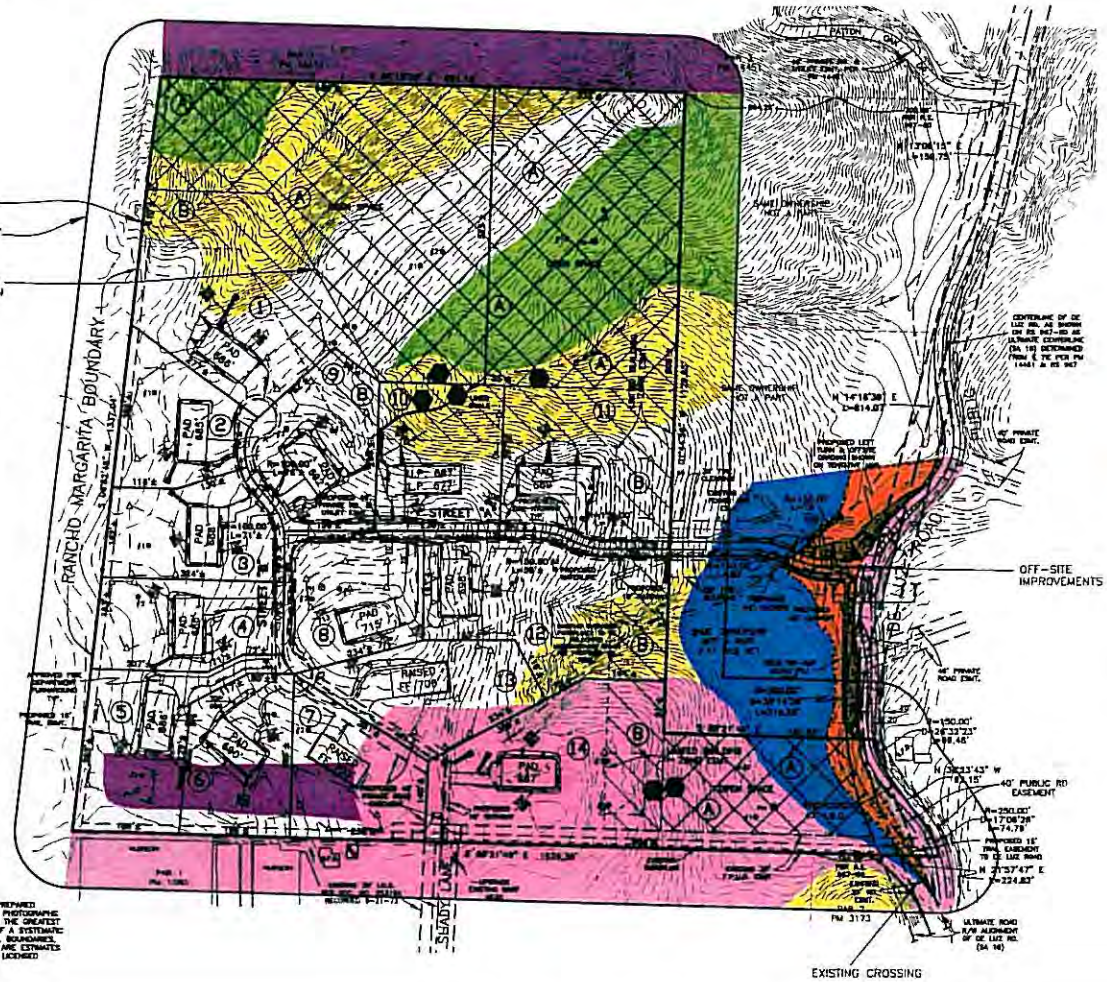

NOTE: THE ENTIRE PROJECT SITE WAS BURNED IN THE GAVILAN MOUNTAIN FIRE OF SEPTEMBER 2000. VEGETATION MAPPING PROVIDED HERE RESULTS FROM A FORENSIC ANALYSIS OF THE PLANT COMMUNITIES THAT EXISTED BEFORE THE FIRES. A SINGLE FAMILY RESIDENCE LOCATED AT THE SOUTHERN END OF THE PARCEL WAS ALSO DESTROYED IN THE FIRE. AREAS DESIGNATED AS DISTURBED ARE DISKED ON A REGULAR BASIS FOR FIRE ABATEMENT PURPOSES.

N

0' 100' 200' 300' 400'
GRAPHIC SCALE: 1" = 100'

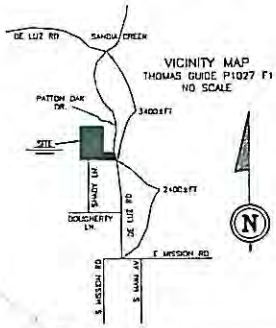

VICINITY MAP
THOMAS GUIDE P1027 F1
NO SCALE

N

NOTE:
VEGETATION COMMUNITY MAPPING IS PREPARED USING OVERLAYS OF CURRENT AERIAL PHOTOGRAPHS AND IS VERIFIED ON THE GROUND TO THE GREATEST DEGREE POSSIBLE IN THE ABSENCE OF A SYSTEMATIC LAND SURVEY. ALL VEGETATION AREAS, BOUNDARIES, AND FUEL MODIFICATION ZONE LIMITS ARE ESTIMATES SUBJECT TO FINAL DELINEATION BY A LICENSED PROFESSIONAL LAND SURVEYOR.

LEGEND

- DIEGAN COASTAL SAGE SCRUB HOLLAND CODE 32500
- DISTURBED HABITAT HOLLAND CODE 11300
- ORCHARDS AND VINEYARDS HOLLAND CODE 18100
- URBAN / DEVELOPED HOLLAND CODE 12000
- SOUTHERN COAST LIVE OAK RIPARIAN FOREST HOLLAND CODE 61310
- GRANITIC CHAMISE CHAPARRAL HOLLAND CODE 37210
- COAST LIVE OAK WOODLAND HOLLAND CODE 71160
- PROPOSED BIOLOGICAL OPEN SPACE EASEMENT INCLUDING AVERAGE 100' BIOLOGICAL BUFFER
- LIMITED BUILDING ZONE - 100'
- ENGELMANN OAKS *Quercus engelmannii*
- COUNTY OF SAN DIEGO AND CDF&G WETLAND BOUNDARY

BALDWIN PROJECT TM 5502 BIOLOGICAL RESOURCES MAP

F:\83199\VEGETATION BASE MAP.DWG

Appendix H

Fuel Modification map