FOR REDUCED PLANS
ORIGINAL SCALE IS IN INCHES

PLANS	BY	DATE
DESIGNED		
CHECKED		
DELINEATED		

REGISTERED PROFESSIONAL ENGINEER — Gerard Dalziel — No. 36333 — Exp. 06/30/06 — CIVIL — STATE OF CALIFORNIA

WILLDAN – Serving Public Agencies
5930 Cornerstone Ct. West, Ste 300
San Diego, California 92121
Tel 858.467.6950, Fax 858.467.1346

REGISTERED CIVIL ENGINEER — DATE

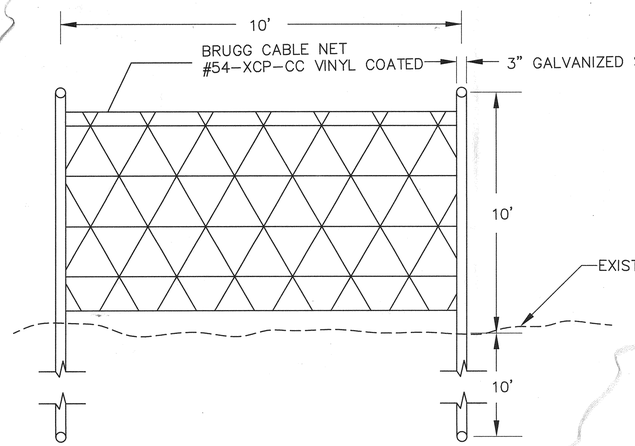

ROCK FALL FENCE DETAIL

NOT TO SCALE

Added Fence Details

Note X:

Where splices are required, spiral reinforcement shall be lapped 80 diameters minimum. A 135 degree hook that is hooked around a longitudinal bar shall be used to terminate the ends of the spiral reinforcement at lapped splices and at the top and bottom of the pile.

(3) ½" x 5" long galvanized lag screws with galvanized cut washers at 24" centers for H=7' to H=11', and at 18" centers for H=13' to H=17'.

(4) Wood Panel Cleat

Note VII:

Ground line to be at the same elevation on both sides of the wall. The wall shall not be used to retain earth. Slope ground to drain away from wall. Maximum downslope 5%.

CAST-IN-PLACE CONCRETE POSTS

H	'B' Bars	'P' Bars	Pile Length 'F' Ground Line (1) SP 300	Pile Length 'F' Ground Line (1) SP 450	Pile Length 'F' Ground Line (2)	H
7'	4 - #4	6' - #4	6'-0"	4'-3"	8'-0"	7'
9'	4 - #4	6 - #4	6'-9"	4'-9"	9'-3"	9'
11'	4 - #5	6 - #5	7'-6"	5'-6"	10'-6"	11'
13'	6 - #5	7 - #5	10'-0"	7'-0"	14'-0"	13'
15'	6 - #6	6 - #6	10'-9"	7'-9"	15'-6"	15'
17'	6 - #7	6 - #6 [e]	11'-6"	8'-6"	16'-6"	17'

(1) Ground line level on both sides of wall.

(2) Ground line level on one side of wall and sloped on the opposite side.

[e] Use 7 - #6 for H=17' at ground line (2).

[c] H=7' to H=11'
[d] H=13' to H=17'

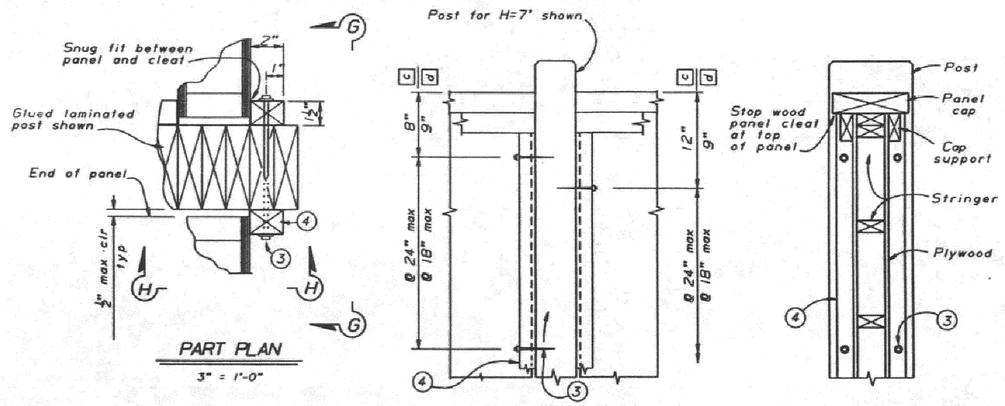

PART PLAN
3" = 1'-0"

ELEVATION G-G
1½" = 1'-0"

SECTION H-H
1½" = 1'-0"

DETAIL M

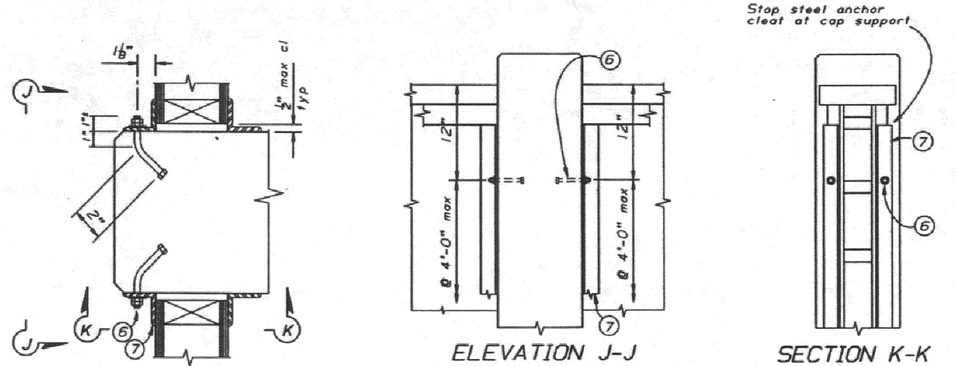

PART PLAN
3" = 1'-0"

ELEVATION J-J
1½" = 1'-0"

SECTION K-K
1½" = 1'-0"

DETAIL "N"

Note XI:

Alternative type cleat anchors may be submitted to the Engineer for approval.

Note I:

For details not shown, see "Sound Wall - Framed Plywood Panel - Post Details No.1", "Panel Details No.1" and "Panel Details No.2" sheets.

(6) Cleat Anchor - ⅜" x 4" long galvanized hex head bolts with hex head nuts, galvanized cut washer and lock washer under nut. Peen threads.

(7) Steel Panel Cleat - galvanized ∟ 2 x 2 x ¼. Paint or stain to match plywood.

COUNTY OF SAN DIEGO
DEPARTMENT OF PUBLIC WORKS
5555 OVERLAND AVENUE, SAN DIEGO, CA 92123-1295

REVISIONS	BY	APPROVED	DATE

COORDINATE INDEX: 380 N. 1750 E.
CONST. COMPL.
FIELD REVISIONS

VALLEY CENTER ROAD RECONSTRUCTION IN THE VICINITY OF VALLEY CENTER

SOUND WALL DETAIL NO. 1

SCALE: HOR. NTS VERT. NTS
W.A. UJ1101 R.S. 1838-3,4,5,6
SHEET 116R OF 256 SHEETS

S:\LDD Design\Valley Center Road\UJ1101\Addendum #2\VCR-NORTH\C-SH116R-SWPPR1-VCRN.dwg
C-SH116R-SWPPR1
08/14/05
17:00