FOR REDUCED PLANS
ORIGINAL SCALE IS IN INCHES

REGISTERED PROFESSIONAL ENGINEER
Gerard Dalziel
No. 36333
Exp. 06/30/06
CIVIL
STATE OF CALIFORNIA

PLANS	BY	DATE
DESIGNED		
CHECKED		
DELINEATED		

WILLDAN – Serving Public Agencies
5930 Cornerstone Ct. West, Ste 300
San Diego, California 92121
Tel 858.467.6950, Fax 858.467.1346

REGISTERED CIVIL ENGINEER — DATE 8/14/05

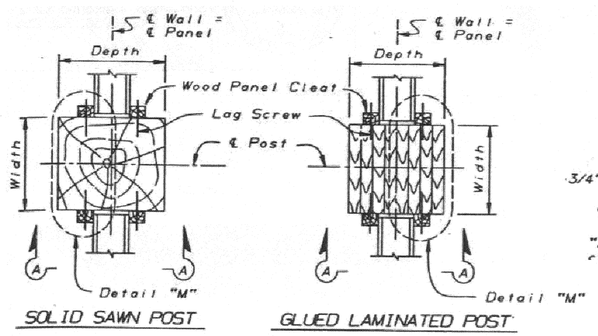

PLAN
1½" = 1'-0"

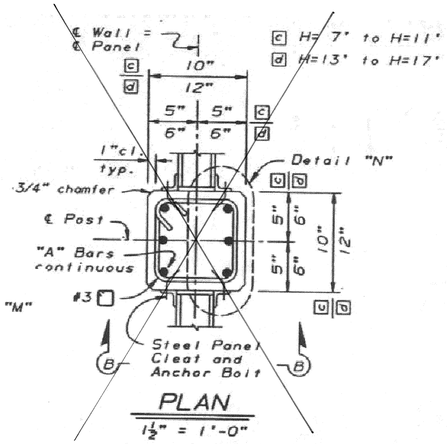

PLAN
1½" = 1'-0"

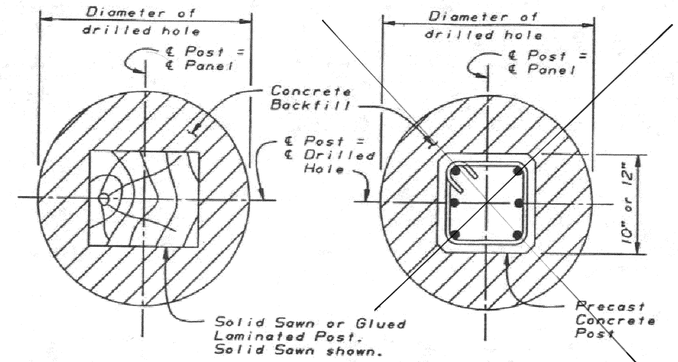

SECTION C-C
1½" = 1'-0"

SECTION D-D
1½" = 1'-0"

NOTE:

1. ALL POSTS SHALL BE WOOD
2. D SHALL BE A MINIMUM OF 10'
3. H SHALL BE A MINIMUM OF 5'
4. ALL WOOD SHALL BE PRESSURE TREATED

Added Notes

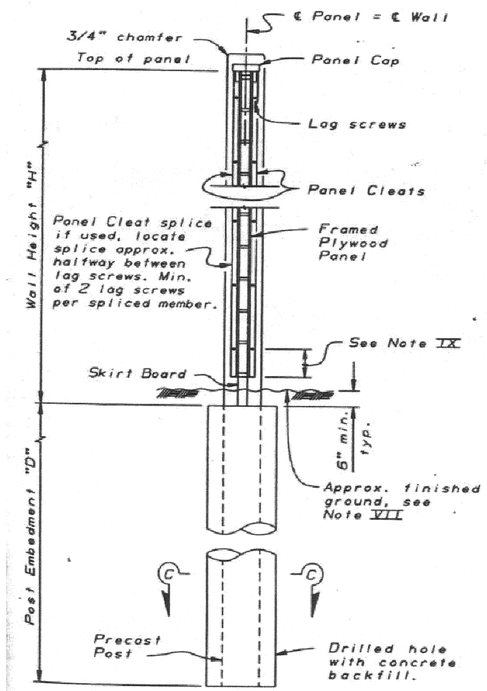

SECTION A-A
1/2" = 1'-0"
WOOD POST

Removed Concrete Posts

Note VII:
Ground line to be at the same elevation on both sides of the wall. The wall shall not be used to retain earth. Slope ground to drain away from wall. Maximum downslope 5%.

Note VIII:
For those posts with panels of different heights on each side of the post or with panels that vary in height, use the tabular values of the larges "H".

Note IX:
To locate the bottom lag screws above the skirt board, use the dimensions shown in Detail "M" for the top lag screws.

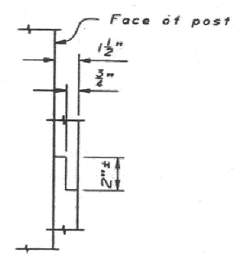

WOOD PANEL CLEAT SPLICE DETAIL
3" = 1'-0"

WOOD POSTS

H	Wood Post Dimensions: Solid Sawn [a] Width	Solid Sawn [a] Depth	Glued Laminated [b] Width	Glued Laminated [b] Depth	Diameter of Drilled Hole	Post Embedment "D": Ground Line (1) SP 300	Ground Line (1) SP 450	Ground Line (2)	H
7'	6"	10"	5 1/8"	10 1/2"	1'-6"	5'-9"	4'-0"	8'-0"	7'
9'	8"	10"	5 1/8"	10 1/2"	1'-6"	6'-9"	4'-9"	9'-3"	9'
11'	10"	10"	6 3/4"	10 1/2"	1'-9"	7'-3"	5'-0"	10'-0"	11'
13'	12"	14"	10 3/4"	12"	2'-2"	8'-6"	6'-3"	12'-0"	13'
15'	12"	16"	12 1/4"	13 1/2"	2'-4"	9'-0"	6'-6"	13'-0"	15'
17'	14"	16"	12 1/4"	15"	2'-4"	9'-9"	7'-0"	14'-0"	17'

[a] Nominal dimensions
[b] Actual dimensions
(1) Ground line level on both sides of wall.
(2) Ground line level on one side of wall and sloped on the opposite side.

PRECAST CONCRETE POSTS

H	'A' Bars	Diameter of Drilled Hole	Post Embedment "E": Ground Line (1) SP 300	Ground Line (1) SP 450	Ground Line (2)	H
7'	4-#4	1'-6"	6'-0"	4'-3"	8'-0"	7'
9'	4-#5	1'-6"	6'-9"	4'-9"	9'-3"	9'
11'	4-#6	1'-6"	7'-6"	5'-6"	10'-6"	11'
13'	6-#6	1'-9"	9'-3"	6'-9"	13'-3"	13'
15'	6-#7	1'-9"	10'-3"	7'-3"	14'-6"	15'
17'	6-#8	1'-9"	11'-0"	8'-0"	16'-0"	17'

Note I:
For details not shown, see "Sound Wall-Framed Plywood Panel-Post Details No.2", "Panel Details No.1" and "Panel Details No.2" sheets.

COUNTY OF SAN DIEGO
DEPARTMENT OF PUBLIC WORKS
5555 OVERLAND AVENUE, SAN DIEGO, CA 92123-1295

REVISIONS	BY	APPROVED	DATE

COORDINATE INDEX
380 N. 1750 E.
CONST. COMPL.
FIELD REVISIONS

VALLEY CENTER ROAD RECONSTRUCTION IN THE VICINITY OF VALLEY CENTER

SOUND WALL DETAIL NO. 2

SCALE: HOR. NTS VERT. NTS
W.A. UJ1101 R.S. 1838-3,4,5,6
SHEET 117R OF 256 SHEETS

C-SH117R-SWDET1
S:\UD Design\Valley Center Road\UJ1101\Addendum #2\VCR-NORTH\C-SH117R-SWDET1-VCRN.dwg
17:00 08/14/05