FOR REDUCED PLANS
ORIGINAL SCALE IS IN INCHES

PLANS	BY	DATE
DESIGNED		
CHECKED		
DELINEATED		

REGISTERED PROFESSIONAL ENGINEER
Gerard Dalziel
No. 36333
Exp. 06/30/06
CIVIL
STATE OF CALIFORNIA

WILLDAN – Serving Public Agencies
5930 Cornerstone Ct. West, Ste 300
San Diego, California 92121
Tel 858.467.6950, Fax 858.467.1346

REGISTERED CIVIL ENGINEER — DATE 8/14/05

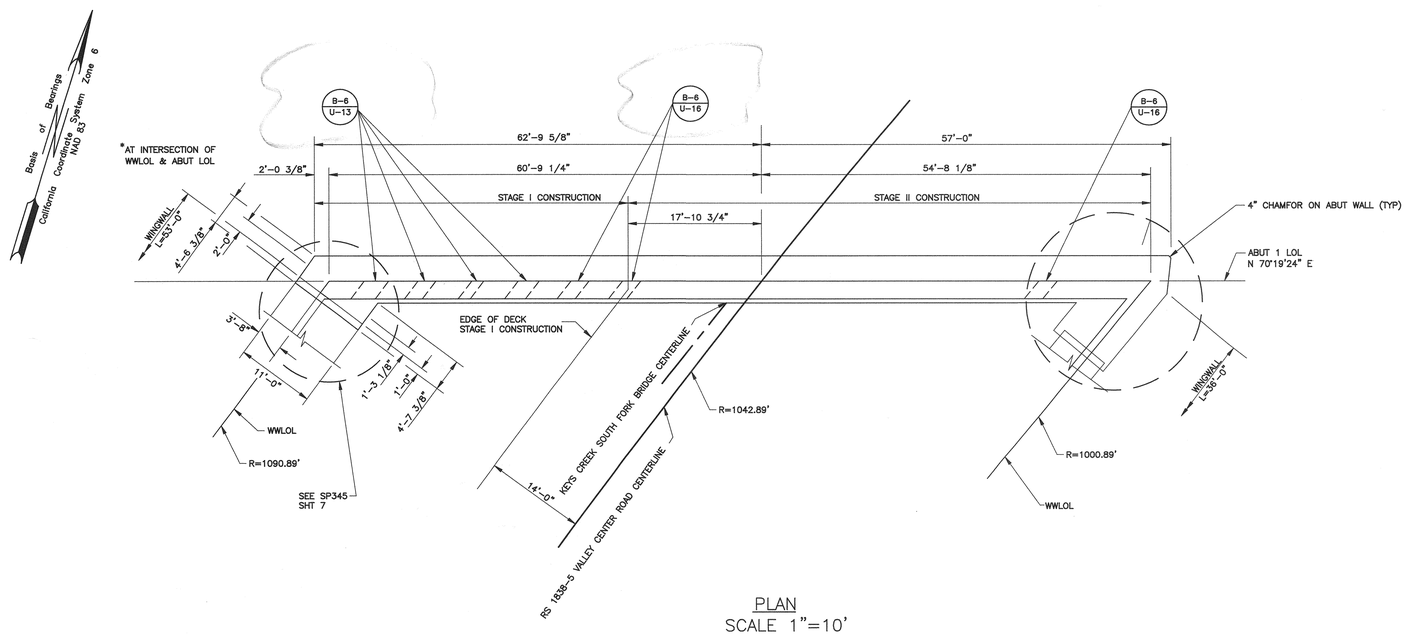

PLAN
SCALE 1"=10'

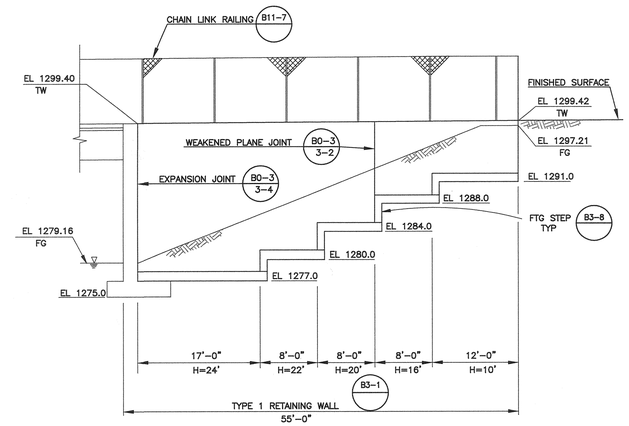

WEST WINGWALL ELEVATION
SCALE 1"=10'

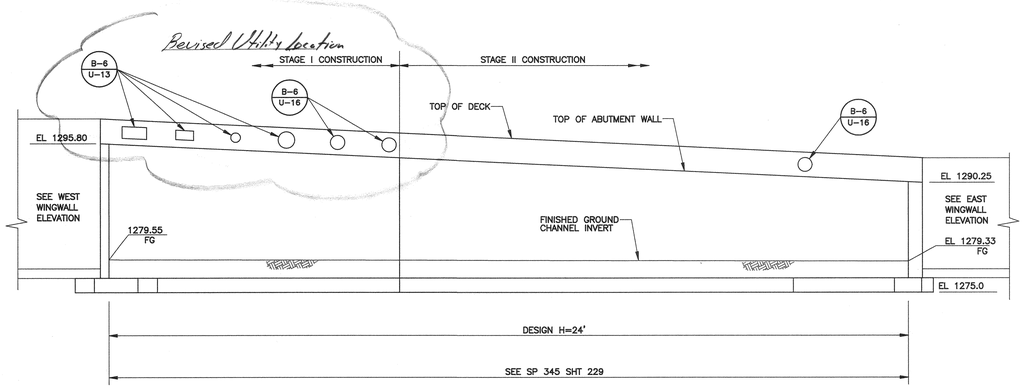

ELEVATION
SCALE 1"=10'

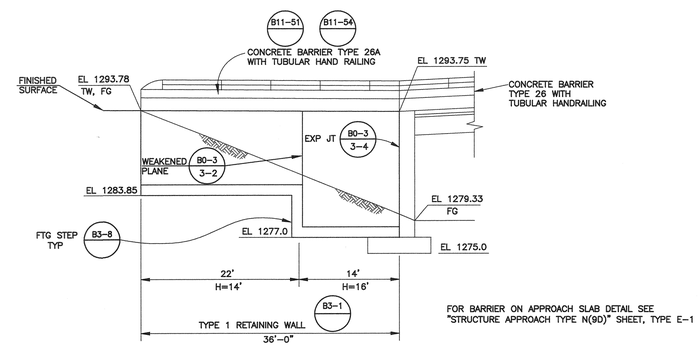

FOR BARRIER ON APPROACH SLAB DETAIL SEE "STRUCTURE APPROACH TYPE N(9D)" SHEET, TYPE E-1

EAST WINGWALL ELEVATION
SCALE 1"=10'

NOTES:
BOTTOM OF ABUTMENT FOOTINGS SHALL BE FOUNDED A MINIMUM OF 2' INTO BEDROCK IN ACCORDANCE WITH THE GEOTECHNICAL ENGINEER'S RECOMMENDATIONS. ALL FOOTING EXCAVATIONS SHALL BE APPROVED BY THE ENGINEER PRIOR TO PLACING REINFORCING. FOOTING ELEVATIONS AND DESIGN HEIGHT "H" OF ABUTMENTS ARE SUBJECT TO CHANGE.

NOTES:
BOTTOM OF WINGWALL FOOTING ELEVATIONS SHOWN ARE FOR ESTIMATING PURPOSES ONLY. FOOTINGS TO BE FOUNDED BEDROCK AS DIRECTED BY THE ENGINEER.

SP 345

COUNTY OF SAN DIEGO
DEPARTMENT OF PUBLIC WORKS
5555 OVERLAND AVENUE, SAN DIEGO, CA 92123-1295

REVISIONS	BY	APPROVED	DATE

COORDINATE INDEX
382 N. 1755 E.
CONST. COMPL.
FIELD REVISIONS

VALLEY CENTER ROAD BRIDGE OVER KEYS CYN CREEK S FORK 57C-0185
ABUTMENT 1 LAYOUT

SCALE: HOR. 1"=10' VERT. 1"=10'
W.A. UJ1101 R.S. 1838-3 TO -6
SP 345 5 OF 14
SHEET 226R OF 256 SHEETS

C-SH226R-ST5-VCRN.dwg
S:\LDD Design\Valley Center Road\UJ1101\Addendum #2\VCR-NORTH\
08/14/05
17:00