FOR REDUCED PLANS
ORIGINAL SCALE IS IN INCHES

| PLANS | BY | DATE |
|---|---|---|
| DESIGNED | | |
| CHECKED | | |
| DELINEATED | | |

REGISTERED PROFESSIONAL ENGINEER
Gerard Dalziel
No. 36333
Exp. 06/30/06
CIVIL
STATE OF CALIFORNIA

WILLDAN – Serving Public Agencies
5930 Cornerstone Ct. West, Ste 300
San Diego, California 92121
Tel 858.467.6950, Fax 858.467.1346

REGISTERED CIVIL ENGINEER — DATE 8/14/06

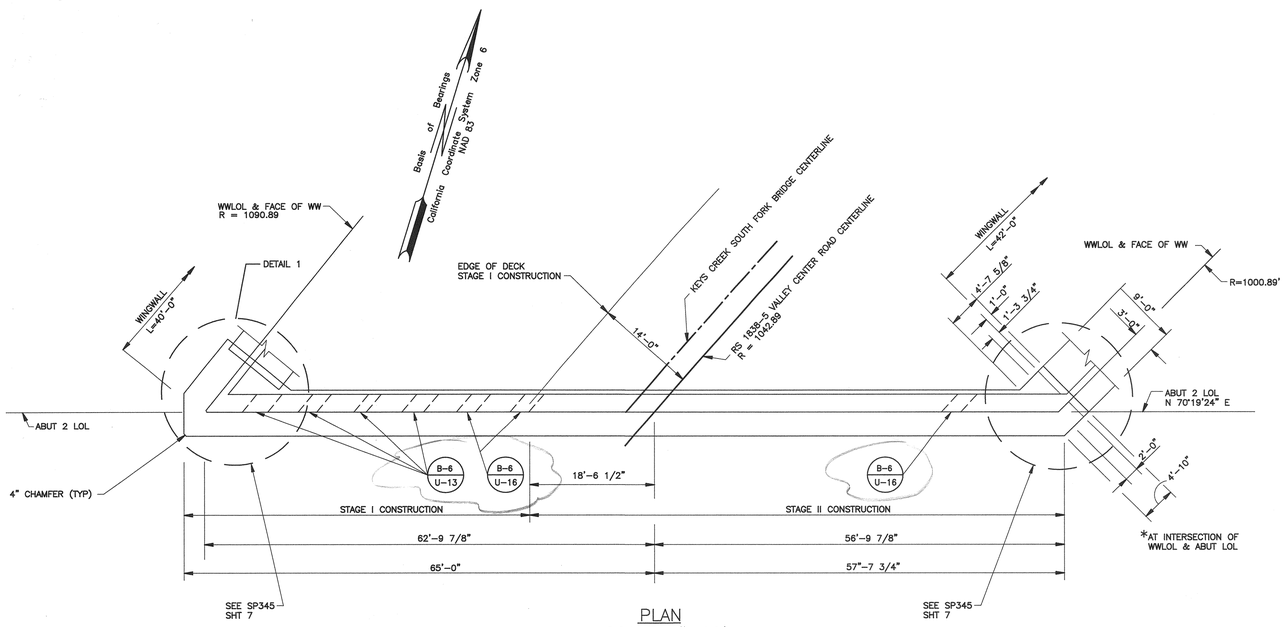


PLAN
SCALE 1"=10'

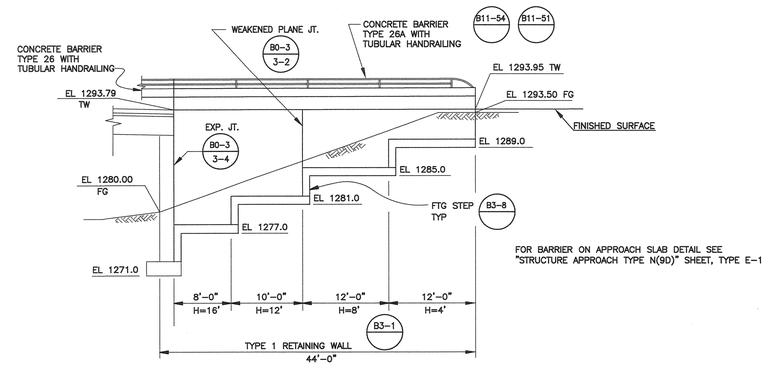


EAST WINGWALL ELEVATION
SCALE 1"=10'

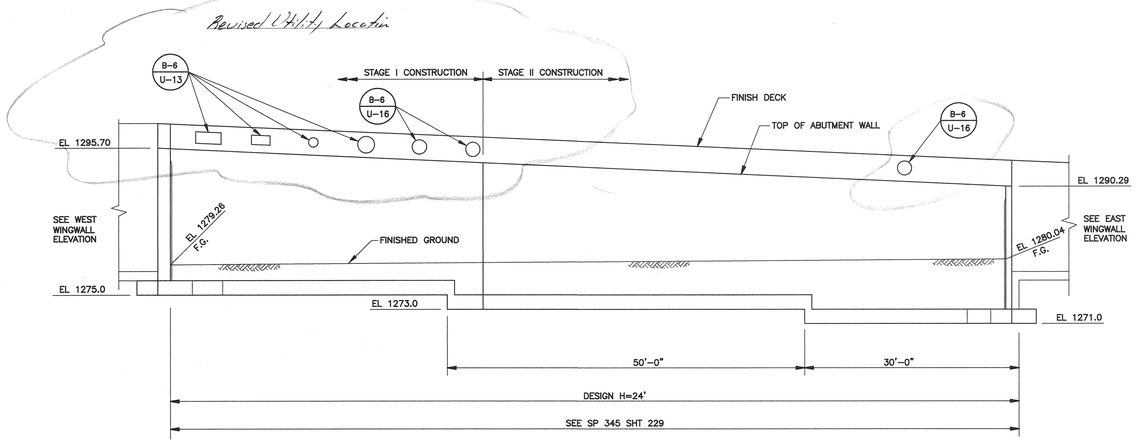


ELEVATION
SCALE 1"=10'

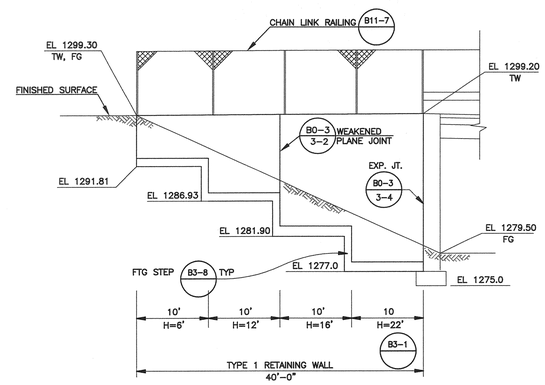


WEST WINGWALL ELEVATION
SCALE 1"=10'

NOTES:

BOTTOM OF ABUTMENT FOOTINGS SHALL BE FOUNDED A MINIMUM OF 2' INTO BEDROCK IN ACCORDANCE WITH THE GEOTECHNICAL ENGINEER'S RECOMMENDATIONS. ALL FOOTING EXCAVATIONS SHALL BE APPROVED BY THE ENGINEER PRIOR TO PLACING REINFORCING. FOOTING ELEVATIONS AND DESIGN HEIGHT "H" OF ABUTMENTS ARE SUBJECT TO CHANGE.

NOTES:

BOTTOM OF WINGWALL FOOTING ELEVATIONS SHOWN ARE FOR ESTIMATING PURPOSES ONLY. FOOTINGS TO BE FOUNDED ON BEDROCK AS DIRECTED BY THE ENGINEER

SP 345

**COUNTY OF SAN DIEGO**
**DEPARTMENT OF PUBLIC WORKS**
**5555 OVERLAND AVENUE, SAN DIEGO, CA 92123-1295**

| REVISIONS | BY | APPROVED | DATE |
|---|---|---|---|
| | | | |

COORDINATE INDEX
382 N. 1755 E.
CONST. COMPL.
FIELD REVISIONS

VALLEY CENTER ROAD BRIDGE OVER KEYS CYN CREEK S FORK 57C-0185
ABUTMENT 2 LAYOUT

SCALE: HOR. 1"=10" VERT. N/A
W.A. UJ1101 R.S. 1838-3 TO -6
SP 345 6 OF 14
SHEET 227R OF 256 SHEETS

C-SI227R-STS-VCRN.dwg
S:\LDD Design\Valley Center Road\UJ1101\Addendum #2\VCR-NORTH\
17:00 08/14/05