FOR REDUCED PLANS
ORIGINAL SCALE IS IN INCHES

PLANS	BY	DATE
DESIGNED		
CHECKED		
DELINEATED		

REGISTERED PROFESSIONAL ENGINEER — Gerard Daiziel — No. 36333 — Exp. 06/30/06 — CIVIL — STATE OF CALIFORNIA

WILLDAN – Serving Public Agencies
5930 Cornerstone Ct. West, Ste 300
San Diego, California 92121
Tel 858.467.6950, Fax 858.467.1346

REGISTERED CIVIL ENGINEER — DATE 8/14/05

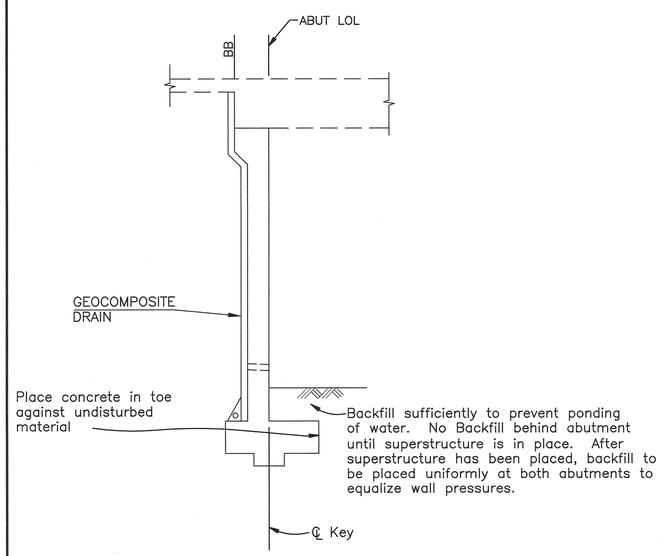

DRAINAGE AND BACKFILL

NOT TO SCALE

NOTE:
SEE "STRUCTURE APPROACH DRAINAGE DETAILS" SHT FOR DRAINAGE REQUIREMENTS

Loading Notes

Superstructure load assumed to vary between
5k – 20k per linear foot, H=22' to H=28'
5k – 17.5k per linear foot, H=18' to H=20'

2' Level surcharge used.

Depth of superstructure: 2' min., 7' max.

DESIGN DATA:

fs = 20,000 psi, n = 10
fc = 1,200 psi

Soil parameters:

ø = 34°
ϒ = 120 pcf

Note:
1. For joints required in wall, see BO-3 / 3-3

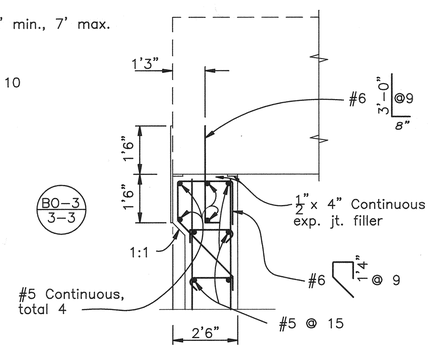

DETAIL "A"

NOT TO SCALE

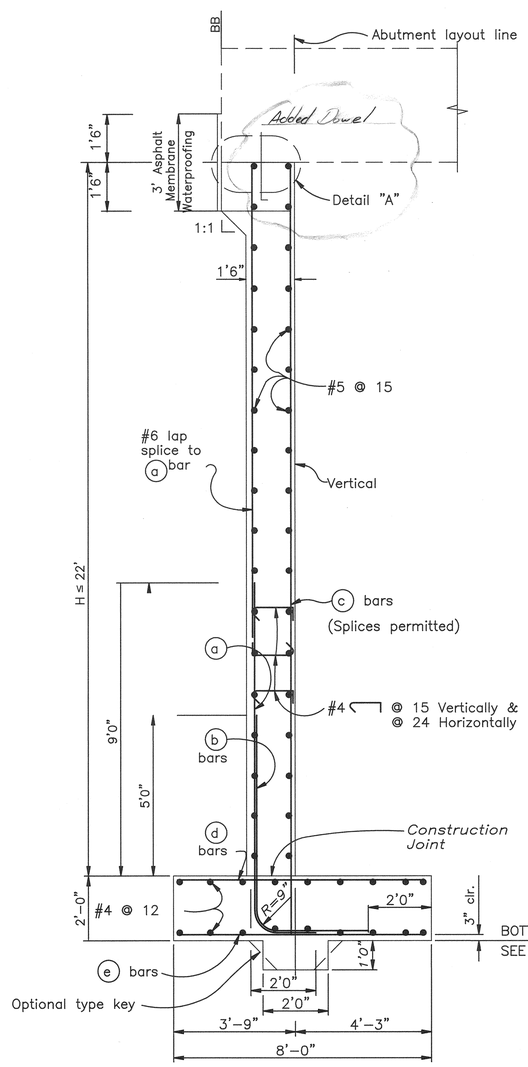

BOTTOM OF FOOTING
SEE FOUNDATION PLAN

SECTION H≤22'

1"=2'

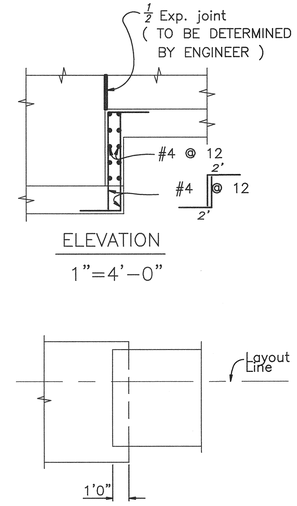

ELEVATION

1"=4'-0"

PLAN
FOOTING STEP

1"=4'-0"

TABLE OF REINFORCING STEEL, DIMENSIONS AND DATA		
H	22'	24'
F	2'0"	2'3"
T	1'6"	1'8"
W	8'0"	8'9
C	4'3"	4'7"
B	3'9"	4'2"
(a) bars	#10 @ 15	#11 @ 16
(b) bars	#10 @ 15	#11 @ 16
(c) bars	#10 @ 7½	#11 @ 8
(d) bars	#4 @ 7½	#5 @ 8
(e) bars	#5 @ 7½	#6 @ 8
ABUTMENT	NO 1	NO 2

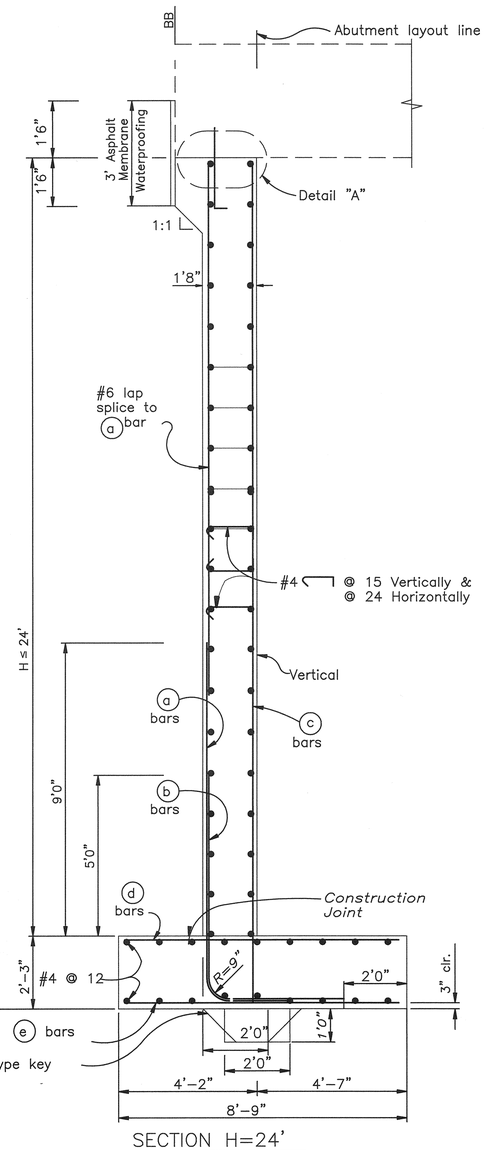

BOTTOM OF FOOTING
SEE FOUNDATION PLAN

SECTION H=24'

1"=2'

SP 345

COUNTY OF SAN DIEGO
DEPARTMENT OF PUBLIC WORKS
5555 OVERLAND AVENUE, SAN DIEGO, CA 92123-1295

REVISIONS	BY	APPROVED	DATE

COORDINATE INDEX
382 N. 1755 E.
CONST. COMPL.
FIELD REVISIONS

VALLEY CENTER ROAD BRIDGE OVER KEYS CYN CREEK S FORK 57C-0185

ABUTMENT DETAILS No.2

SCALE: HOR. AS NOTED VERT. AS NOTED
W.A. UJ1101 R.S. 1838-3 TO -6
SP 345 8 OF 14
SHEET 229R OF 256 SHEETS

C-SH229R-STB-VCRN.dwg
S:\LDD Design\Valley Center Road\UJ1101\Addendum #2\VCR-NORTH\
17:00 08/14/05