FOR REDUCED PLANS
ORIGINAL SCALE IS IN INCHES

PLANS	BY	DATE
DESIGNED		
CHECKED		
DELINEATED		

REGISTERED PROFESSIONAL ENGINEER — Gerard Dalziel, No. 36333, Exp. 06/30/06, CIVIL, STATE OF CALIFORNIA

WILLDAN – Serving Public Agencies
5930 Cornerstone Ct. West, Ste 300
San Diego, California 92121
Tel 858.467.6950, Fax 858.467.1346

REGISTERED CIVIL ENGINEER — DATE 8/14/05

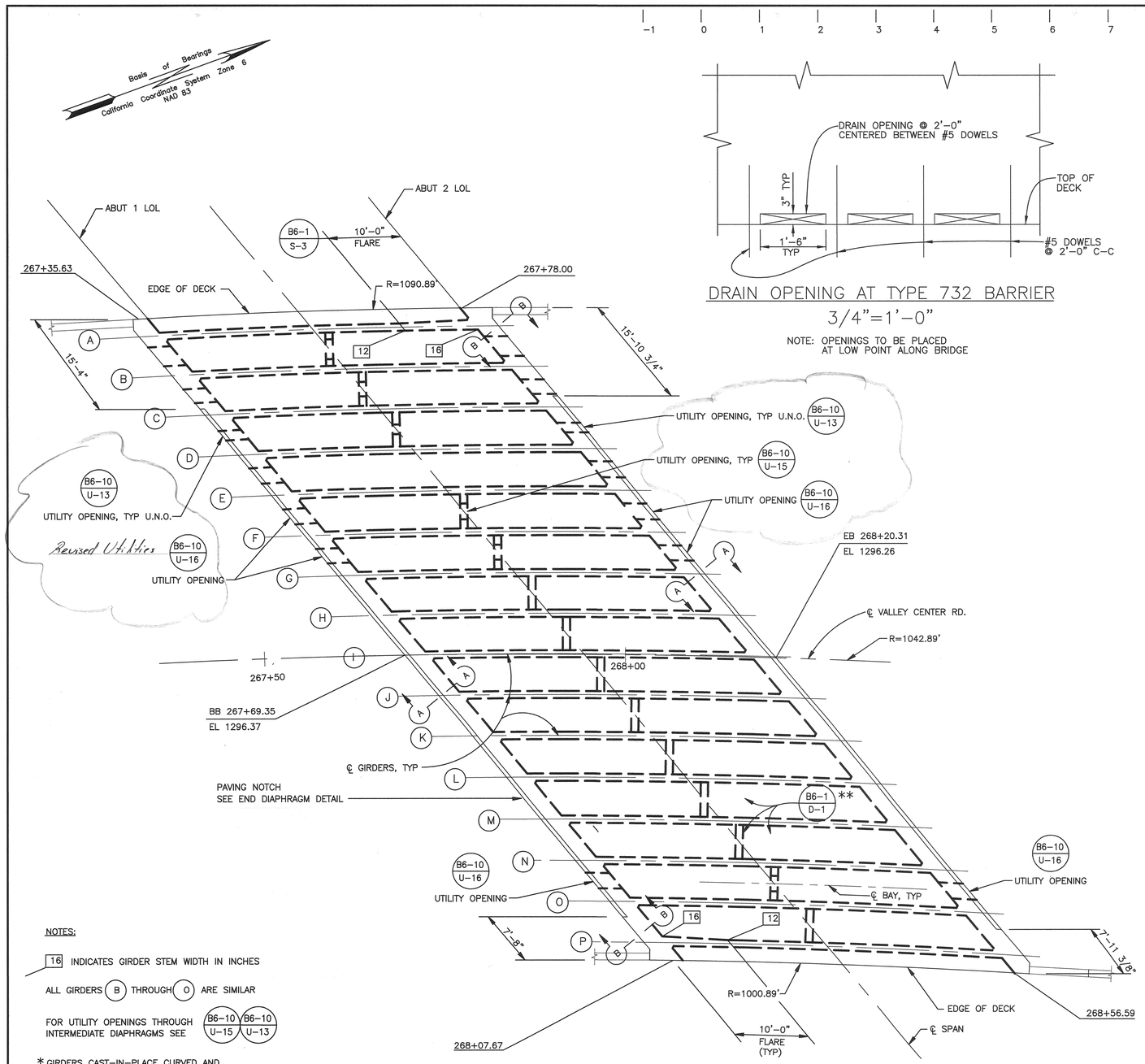

GIRDER LAYOUT
1/8"=1'-0"

NOTES:

16 INDICATES GIRDER STEM WIDTH IN INCHES

ALL GIRDERS (B) THROUGH (O) ARE SIMILAR

FOR UTILITY OPENINGS THROUGH INTERMEDIATE DIAPHRAGMS SEE B6-10 / U-15, B6-10 / U-13

* GIRDERS CAST-IN-PLACE CURVED AND CONCENTRIC TO ℄ ROADWAY

** EXTEND INTERMEDIATE DIAPHRAGMS TO BOTTOM OF GIRDERS (TYP)

DRAIN OPENING AT TYPE 732 BARRIER
3/4"=1'-0"

NOTE: OPENINGS TO BE PLACED AT LOW POINT ALONG BRIDGE

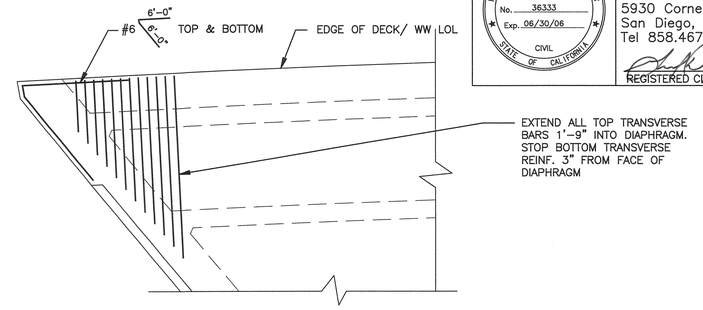

ACUTE CORNER

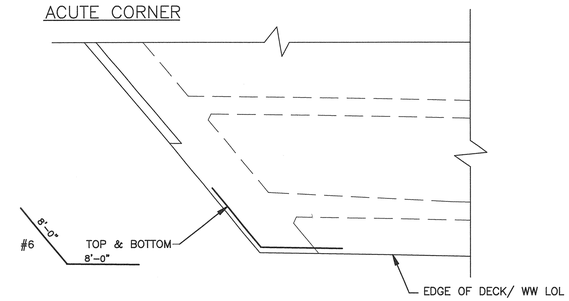

OBTUSE CORNER

DECK CORNER DETAILS
1/4"=1'-0"

NOTE:
ABUT 1 CORNERS SHOWN
ABUT 2 CORNERS SIMILAR

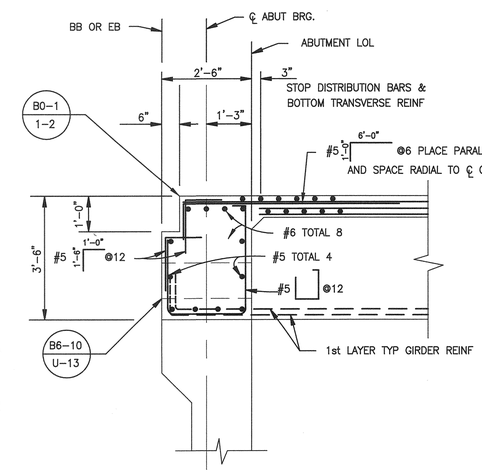

SECTION A–A (END DIAPHRAGM)
1/2"=1'-0"

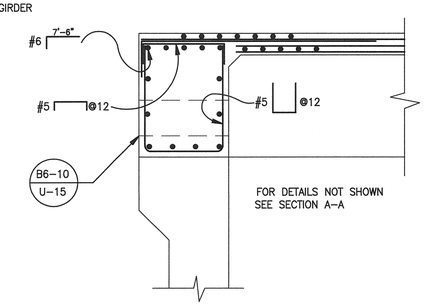

SECTION B–B (END DIAPHRAGM)
1/2"=1'-0"

SP 345

COUNTY OF SAN DIEGO
DEPARTMENT OF PUBLIC WORKS
5555 OVERLAND AVENUE, SAN DIEGO, CA 92123-1295

REVISIONS	BY	APPROVED	DATE

COORDINATE INDEX: 382 N. 1755 E.
CONST. COMPL.
FIELD REVISIONS

VALLEY CENTER ROAD BRIDGE OVER KEYS CYN CREEK S FORK 57C–0185

GIRDER LAYOUT & DIAPHRAGM DETAILS

SCALE: HOR. AS NOTED VERT. AS NOTED
W.A. UJ1101 R.S. 1838–3 TO –6
SP 345 10 OF 14
SHEET 231R OF 256 SHEETS

C-SH231R-ST10-VCRN.dwg
S:\LDD Design\Valley Center Road\UJ1101\Addendum #2\VCR-NORTH\
17:00 08/14/05