FOR REDUCED PLANS
ORIGINAL SCALE IS IN INCHES

PLANS	BY	DATE
DESIGNED		
CHECKED		
DELINEATED		

REGISTERED PROFESSIONAL ENGINEER — Gerard Dalziel — No. 36333 — Exp. 06/30/06 — CIVIL — STATE OF CALIFORNIA

WILLDAN – Serving Public Agencies
5930 Cornerstone Ct. West, Ste 300
San Diego, California 92121
Tel 858.467.6950, Fax 858.467.1346

REGISTERED CIVIL ENGINEER — DATE 8/14/05

Caltrans Metric

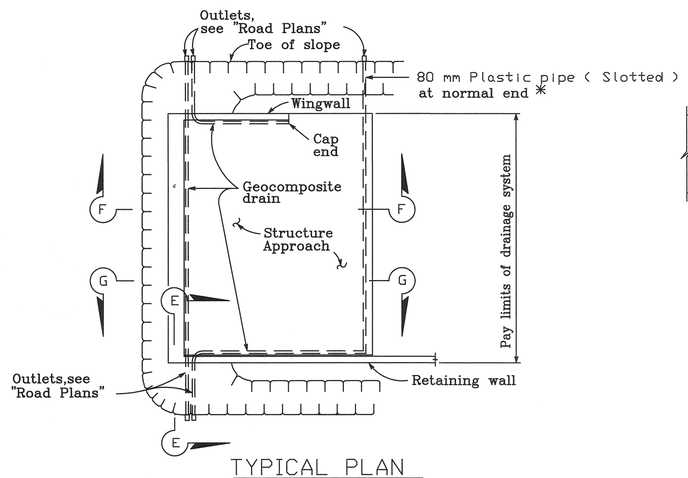

TYPICAL PLAN

*For pipe layout at staggered end,see "Detail B".

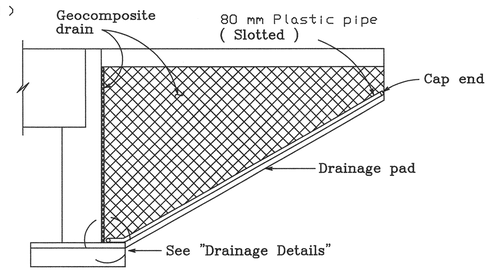

CANTILEVER WINGWALL
SECTION F-F

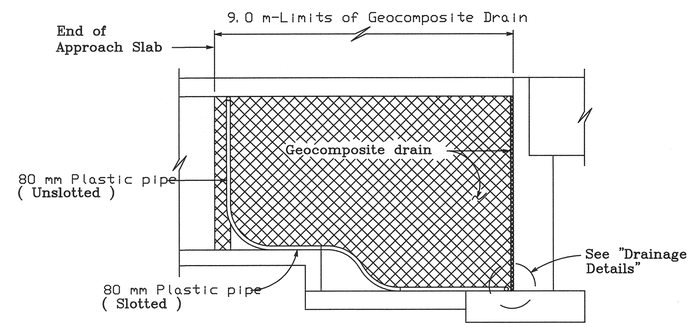

RETAINING WALL WINGWALL
SECTION G-G

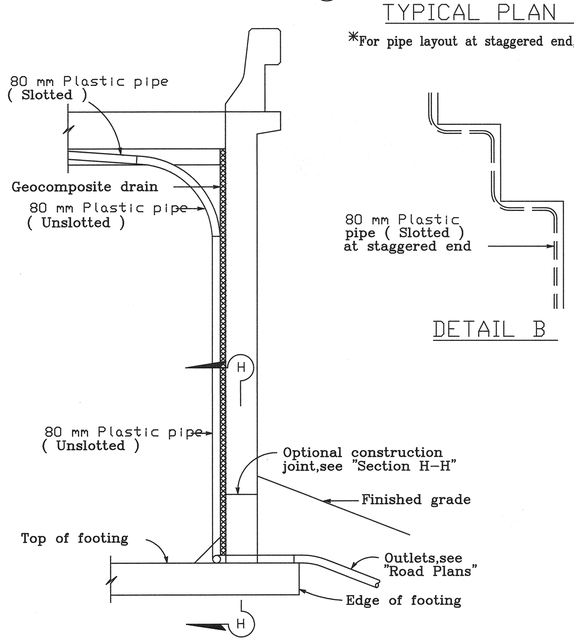

SECTION E-E

NOTE: Bends and junctions in 80 mm plastic pipe are 750 mm radius min.

DETAIL B

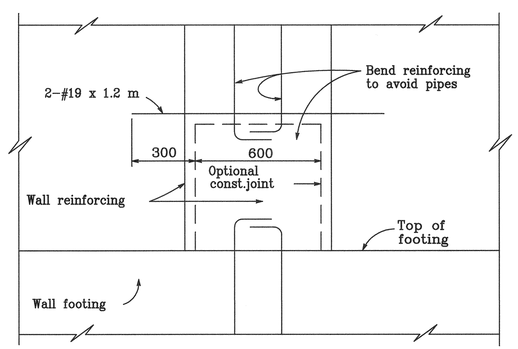

SECTION H-H

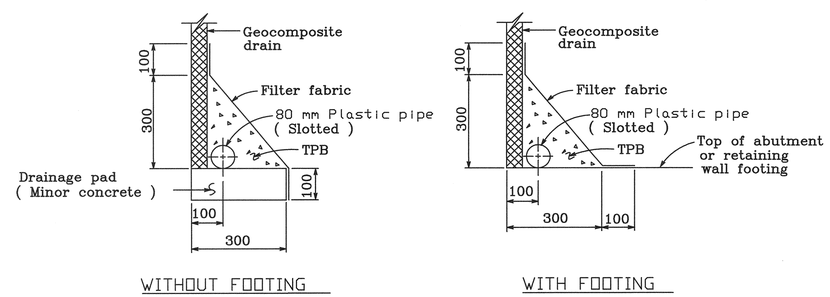

WITHOUT FOOTING — WITH FOOTING

DRAINAGE DETAILS

NO SCALE
ALL DIMENSIONS ARE IN MILLIMETERS UNLESS OTHERWISE SHOWN

SP 345

COUNTY OF SAN DIEGO
DEPARTMENT OF PUBLIC WORKS
5555 OVERLAND AVENUE, SAN DIEGO, CA 92123-1295

REVISIONS	BY	APPROVED	DATE

COORDINATE INDEX: 382 N. 1755 E.
CONST. COMPL.
FIELD REVISIONS

VALLEY CENTER ROAD BRIDGE OVER KEYS CYN CREEK S FORK 57C-0185
STRUCTURE APPROACH DRAINAGE DETAIL
Revised Title

SCALE: HOR. NTS VERT. NTS
W.A. UJ1101 R.S. 1838-3 TO -6
SP 345 12 OF 14
SHEET 233R OF 256 SHEETS

C-SH233R-ST12-VCRN.dwg
S:\LDD Design\Valley Center Road\UJ1101\Addendum #2\VCR-NORTH\
08/14/05 17:00