FOR REDUCED PLANS
ORIGINAL SCALE IS IN INCHES

PLANS	BY	DATE
DESIGNED		
CHECKED		
DELINEATED		

REGISTERED PROFESSIONAL ENGINEER — Gerard Dalziel — No. 36333 — Exp. 06/30/06 — CIVIL — STATE OF CALIFORNIA

WILLDAN – Serving Public Agencies
5930 Cornerstone Ct. West, Ste 300
San Diego, California 92121
Tel 858.467.6950, Fax 858.467.1346

REGISTERED CIVIL ENGINEER — DATE 8/14/05

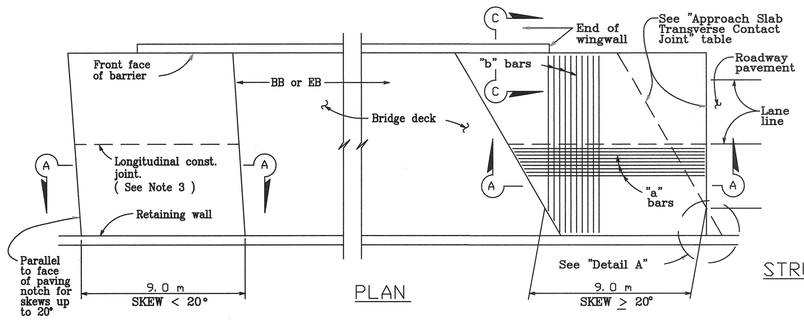

PLAN

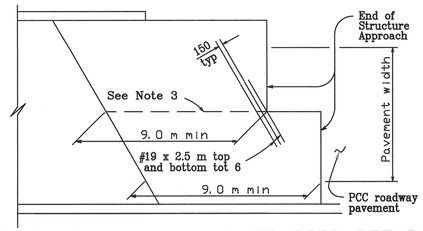

STRUCTURE APPROACH – END STAGGER DETAIL

APPROACH SLAB TRANSVERSE CONTACT JOINT		
APPROACH SKEW	WITH AC ROADWAY PAVEMENT	WITH PCC ROADWAY PAVEMENT
< 20°	Parallel to face of paving notch	Parallel to face of paving notch
20°– 45°	Parallel to face of P N use (Detail A)	Stagger lines 7.2 m to 10.8 m apart
> 45°	Parallel to face of P N use (Detail A)	Stagger at each lane line

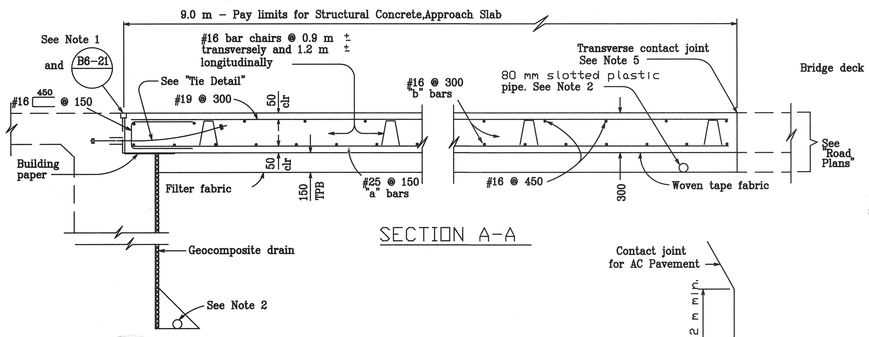

SECTION A-A

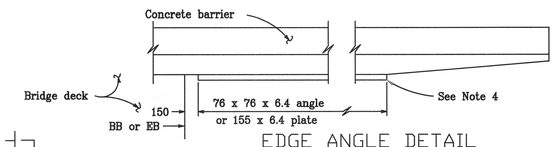

EDGE ANGLE DETAIL

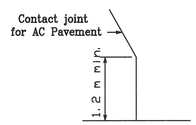

DETAIL A

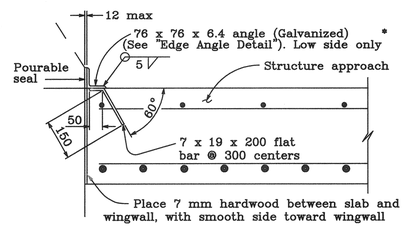

* (TO BE USED WITH TYPE 25 OR TYPE 27 CONCRETE BARRIER)

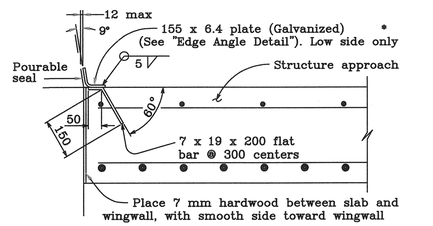

* (TO BE USED WITH TYPE 732 OR TYPE 736 CONCRETE BARRIER)

DETAIL B

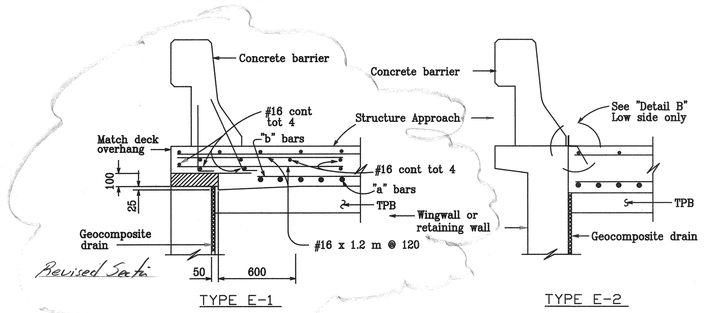

TYPE E-1 TYPE E-2

SECTION C-C

(Type E-1 to be used,unless otherwise shown on plans)

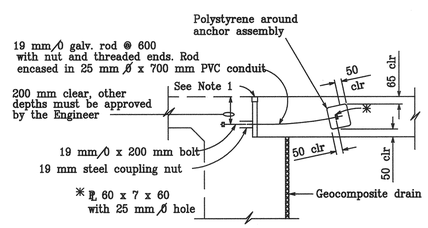

TIE DETAIL

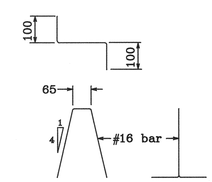

BAR CHAIR DETAIL

NO SCALE

NOTES:

1. For details not noted or shown,see Structure Plans.
2. For drainage details,see "Structure Approach Drainage Details" sheet.
3. Longitudinal construction joints,when permitted by the Engineer,shall be located on lane lines.
4. End angle or plate at beginning of barrier transition, end of wingwall or end of structure approach, as applicable.
5. For transverse contact joint with new PCC paving, refer to Standard Plan P10.
6. At the contractor's option,approach slab transverse reinforcement may be placed parallel to paving notch. Spacing of transverse reinforcement is measured along ℄ roadway.

Polystyrene to be removed.

ALL DIMENSIONS ARE IN MILLIMETERS UNLESS OTHERWISE SHOWN

SP 345

COUNTY OF SAN DIEGO
DEPARTMENT OF PUBLIC WORKS
5555 OVERLAND AVENUE, SAN DIEGO, CA 92123-1295

REVISIONS	BY	APPROVED	DATE

COORDINATE INDEX: 382 N. 1755 E.
CONST. COMPL.
FIELD REVISIONS

VALLEY CENTER ROAD BRIDGE OVER KEYS CYN CREEK S FORK 57C–0185

STRUCTURE APPROACH TYPE N(9D)

SCALE: HOR. NTS VERT. NTS
W.A. UJ1101 R.S. 1838–3 TO –6
SP 345 13 OF 14
SHEET 234R OF 256 SHEETS

C-SH234R-ST13-VCRN.dwg
S:\LDD Design\Valley Center Road\UJ1101\Addendum #2\VCR-NORTH\
17:00 08/14/05