County of San Diego

DEPARTMENT OF PUBLIC WORKS

JOHN L. SNYDER
DIRECTOR

5555 OVERLAND AVE, SUITE 2188
SAN DIEGO, CALIFORNIA 92123-1295

(858) 694-2212 FAX: (858) 268-0461
Web Site: sdcdpw.org

September 21, 2006

ADDENDUM NO. 4

TO: Contract Documents for Construction of Central Avenue Flood Control Improvements - A FEMA Funded Project - Oracle Project No. 1002549

BID OPENING DATE (Original): September 21, 2006 BID NO.: 1627
NEW BID OPENING DATE: September 28, 2006

This Addendum No. 4 modifies the base bid schedule and corrects and clarifies the plans and specifications. Changes to project plans on attached sheets are shown clouded.

1. On page 2-3a, at the Base Bid Schedule at ITEM NO. 22, change the description from "Dewatering System" to "Dewatering System and Temporary Conveyance System".

2. On page 2-3b, at the Base Bid Schedule :

   a) At ITEM NO. 45, change the estimated quantity from "358" to "500".

   b) At ITEM NO. 52, change the estimated quantity from "13,000" to "19,700".

3. On page 5-40, add as the next to last paragraph on the page, the following:

   "The rows of gravel bags across the bottom of the channel shall extend to the side slopes of the channel."

4. On page 5-48, right before the first paragraph (which begins with "Asphalt concrete surfacing...") add the following paragraphs:

   "The existing pavement on Central Avenue shall be cold planed for the full width of the road between Station 11+80 and Station 12+40 and between Station 14+27 and Station 14+82. The pavement shall be sawcut at Station 12+40 and at Station 14+27. The existing pavement shall be removed between Station 12+40 and Station 14+27.

"The cold planed cut depth shall be as shown on the plans and as directed by the Engineer. The final cut shall result in a uniform surface. The outside lines of the planed area shall be neat and uniform. Planing asphalt concrete pavement operations shall be performed without damage to the surfacing to remain in place.

"Cold planing machines shall be equipped with a cutter head not less than 72 inches in width and shall be operated so as not to produce fumes or smoke. The cold planing machine shall be capable of planing the pavement without requiring the use of a heating device to soften the pavement during or prior to the planing operation.

"Full compensation for cold planing shall be considered as included in the contract price paid per ton for asphalt concrete, type B and no separate payment will be made therefor."

5. On page 5-50, add as the third paragraph, the following:

   "Full compensation for 4" diameter perforated pipe, weepholes, 3/8" pea gravel, and filter fabric shall be considered as included in the contract price paid per cubic yard for minor concrete (apron) and no separate payment will be made therefor."

6. On page 5-50, at "28. Minor Concrete", add as the fourth paragraph, the following:

   "Relative compaction of not less than 90 percent shall be obtained for a minimum depth of 6 inches below the top of subgrade under driveways and sidewalks, which are outside the reinforced concrete box limits."

7. a) On page 5-54, at "32. Dewatering System", delete this section in its entirety.

   b) Add attached page 5-54a (Addendum No. 4)

8. On page 5-59, in the first sentence of the third paragraph (which begins with "The SWPPP shall apply...") before the word "material", add the phrase "dewatering, Baker Tanks or equivalent,".

9. On page 5-96, at "D. BEDDING REQUIREMENTS FOR PIPE ALTERNATES":

   a) At the end of the first sentence of the first paragraph, add the phrase, "except that the bedding requirements under the reinforced concrete box culvert shall also conform to the concrete slab pipe protection detail on sheet 13 of the project plans."

   b) Add as the third paragraph, "Full compensation for furnishing and placing crushed rock or slurry and for furnishing and placing concrete and reinforcement, including any additional earthwork, to construct the concrete slab pipe protection shall be considered as included in the contract price paid per linear foot for polyvinyl chloride sewer pipe and no separate payment will be made therefor."

c) Add attached detail entitled "PIPE PROTECTION CONCRETE SLAB (FROM STA 13+00 TO STA 14+00) [ADDENDUM NO. 4]" to sheet 13 of the project plans.

10. On sheet 6 of the project plans, replace Sections I, J and K with attached Sections I (Addendum No. 4), J (Addendum No. 4) and K (Addendum No. 4), respectively.

11. On sheet 7 of the project plans, replace Sections M, O, Q, R and S with attached Sections M (Addendum No. 4), O (Addendum No. 4), Q (Addendum No. 4), R (Addendum No. 4) and S (Addendum No. 4), respectively.

12. On sheet 9 of the project plans, under "NOTES:", add the following note:

    "3. CONTRACTOR'S EQUIPMENT SHALL NOT BE PARKED ON CONSTRUCTED ACCESS ROAD."

13. On sheet 9 of the project plans, replace the temporary access road typical section with the attached typical section entitled, "ACCESS ROAD TYPICAL SECTION (TEMPORARY) [ADDENDUM NO. 4]".

14. On sheet 12 of the project plans, at Station 12+53.49, change the rim elevation from "100.40" to "101.27".

15. On sheet 16 of the project plans, add the note, "An existing traffic signal pull box on the north side of Central Avenue, which is not shown on the plans, and which is approximately 5 feet west of the traffic signal pull box shown in the vicinity of Station 14+47, shall be protected in place".

16. On sheet 17 of the project plans, disregard all Demolition Note [1] references shown north of the north R/W line except for the demolition note referencing protection of a block wall and disregard the Demolition Note [1] reference just south of the north R/W line at Station 15+14.

17. On sheet 18 of the project plans:

    a) Under "CONSTRUCTION NOTES", add the following note:

       " (10) MAKE CONNECTION TO EXISTING RCB PER DETAIL YY (ADDENDUM NO. 4)"

    b) In the top left corner of the Flood Wall Plan View, next to "(2)", add " (10)".

    c) Add attached Detail YY (Addendum No. 4).

18. On sheet 20 of the project plans:

    a) "Under "CONSTRUCTION NOTES", add the following note:

    " 10 MAKE CONNECTION TO EXISTING RCB PER DETAIL Z (ADDENDUM NO. 4)"

    b) In the top left corner of the Wall Plan View, just above '2", add " 10 "

    c) Add attached Detail Z (Addendum No. 4).

19. On sheet 22 of the project plans:

    a) In the WALL DATA TABLE on the left side of the sheet, change the note for No. 22 to read, "CMU BLOCK RETAINING WALL EXTENSION PER DETAIL W (ADDENDUM NO. 4)".

    b) Add attached Detail W (Addendum No. 4).

20. On sheet 23 of the project plans:

    a) At "CONSTRUCTION NOTES:", At the end of Note 13, add the phrase, "AND CONNECT DEBRIS NOSE TO EXISTING RCB PER DETAIL X (ADDENDUM NO. 4)"

    b) Add attached Detail X (Addendum No. 4).

21. On sheet 26 of the project plans, replace a portion of the plan view with that shown on attached plan view entitled "TRIPLE BOX CULVERT PLAN VIEW (PORTION) (ADDENDUM NO. 4)".

22. On sheet 28 of the project plans, in the plan view, change the centerline stationing for the 20' driveway from "STA. 12+57.28" to "STA. 12+61.90".

23. On sheet 38 of the project plans, replace Detail N with attached Detail N (Addendum No. 4).

24. On sheet 47 of the project plans, under "COMMENTS", delete the comment (which begins with "HYDROSEED MIX – SEE....") in its entirety and replace with the comment, "HYDROSEED MIX – SEE CONCEPTUAL WATER POLLUTION CONTROL PLAN, SHEET 33, FOR SEED MIX TYPE".

25. Add attached Sheet 1 of 3 – Sheet 3A (Addendum No. 4), Sheet 2 of 3 – Sheet 3A (Addendum No. 4) and Sheet 3 of 3 – Sheet 3A (Addendum No. 4) to the project plans.

This addendum is required to be inserted in the Contract Documents by the bidder and acknowledged by the bidder on page 2-2 of the Proposal to the Board, at the time of submitting the bid.

GREGORY W. RICHARDS, Senior Civil Engineer
Department of Public Works

GWR:SJM:gf

cc: Terry Rayback (O340); Sirous Deylamian (O340); Ramin Abidi (O90); Bill Morgan (O90); Roberta Lamp (O32)

Attachments forming a part of this Addendum No. 4

1. Page 5-54a (Addendum No. 4)
2. Section I (Addendum No. 4)
3. Section J (Addendum No. 4)
4. Section K (Addendum No. 4)
5. Section M (Addendum No. 4)
6. Section O (Addendum No. 4)
7. Section Q (Addendum No. 4)
8. Section R (Addendum No. 4)
9. Section S (Addendum No. 4)
10. Detail N (Addendum No. 4)
11. Detail W (Addendum No. 4)
12. Detail X (Addendum No. 4)
13. Detail YY (Addendum No. 4)
14. Detail Z (Addendum No. 4)
15. Triple Box Culvert Plan View (Portion) (Addendum No. 4)
16. Sheets 1, 2 & 3 – Sheet 3A (Addendum No. 4)
17. Pipe Protection Concrete Slab (From Sta 13+00 to Sta 14+00) [Addendum No. 4]
18. Access Road Typical Section (Temporary) [Addendum No. 4]

32. Dewatering System and Temporary Conveyance System

The control and removal of water shall conform to the provisions of Section 19-3.04, "Water Control and Foundation Treatment," of the Standard Specifications and these Special Provisions.

All water encountered during construction shall be disposed of by the Contractor in such manner as will not damage public or private property or create a nuisance or health menace.

The contractor shall also provide a method or means of conveying on and off-site surface flows by diverting the flow through or around the work area. The diversion or conveyance system shall have the capacity to handle a minimum storm event of 1000 cubic feet per second (CFS). Within 10 days after notice to proceed and prior to the start of any work in the channel the Contractor shall submit to the Engineer for review and approval a Temporary Conveyance Plan that includes the temporary by-pass of any on and off-site surface flows around the work area at all times during construction.

The Contractor's attention is directed to the California Storm Water Quality Association Construction Best Management Practice Handbook (Fact Sheet NS-5, "Clear Water Diversion") for more information.

If pumps are used they shall be electric or muffled and situated so as to prevent disturbance to residents. In addition, pumps shall conform to the limitations of any the local noise ordinances or environmental restrictions.

The Contractor shall provide a dewatering system to control the sub-surface water within the work area including utility company work. Within 10 days after notice to proceed and prior to the start of any work in the channel the Contractor shall submit to the Engineer for review and approval a dewatering plan (assume groundwater to be at elevation 95.0) that includes the details, means and methods of the proposed dewatering system.

Dewatering and temporary conveyance shall be incorporated into the project's Storm Water Pollution Prevention Plan.

The contract lump sum price paid for dewatering system and temporary conveyance system shall include full compensation for furnishing all labor, materials, tools, equipment, and incidentals for doing all the work involved in providing, maintaining and removing the dewatering and temporary conveyance system(s) for the project, including preparing dewatering plan and temporary conveyance plan and incorporating dewatering and temporary conveyance into the SWPPP, as specified in the Standard Specifications and these Special Provisions, and as directed by the Engineer.

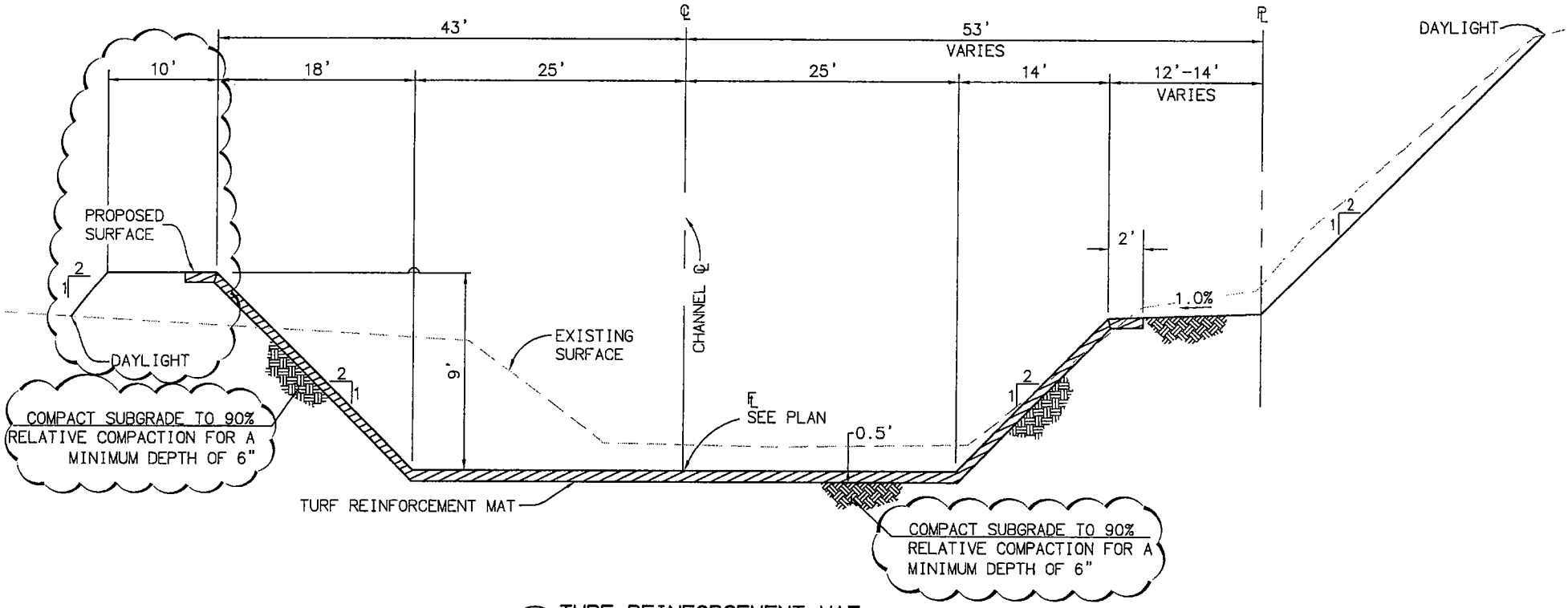

I 26 6 TURF REINFORCEMENT MAT
STA 20+45.00 TO 21+25.00
N.T.S.

(ADDENDUM NO. 4)

REVISED CROSS-SECTION FOR TURF REINFORCEMENT MAT ON SHEET 6

H:\PDATA\25101626\CADD\LAND\DLV\IMPROVE\ADDENDUM DWGS\1626-ADD-11.DWG SCOTTDAVIS 9/15/06 8:35 am

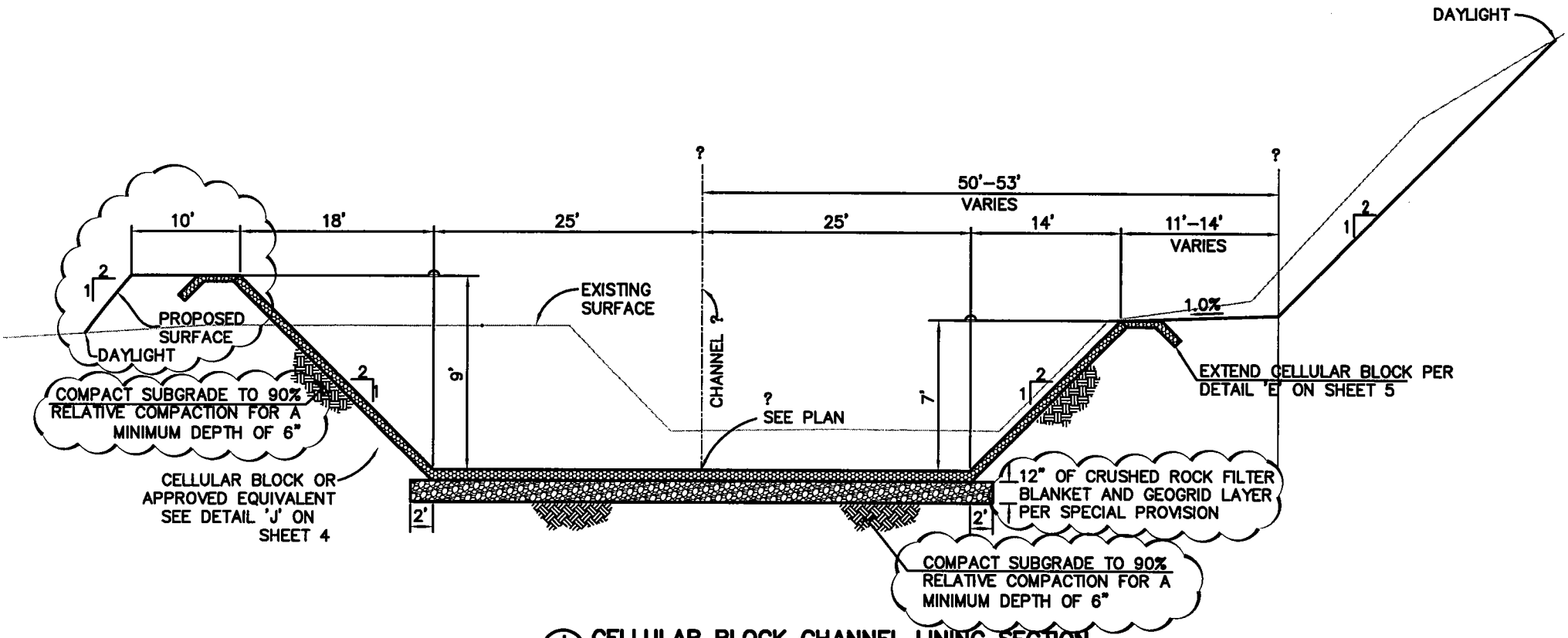

J 26 6 **CELLULAR BLOCK CHANNEL LINING SECTION**

STA 21+25.00 TO 21+95.00

N.T.S.

(ADDENDUM NO. 4)

REVISED CROSS–SECTION FOR CELLULAR BLOCK CHANNEL LINING ON SHEET 6

H:\PDATA\25101626\CADD\LAND\DLV\IMPROVE\ADDENDUM DWGS\1626–ADD–12.DWG MNF 9/18/06 8:23 am

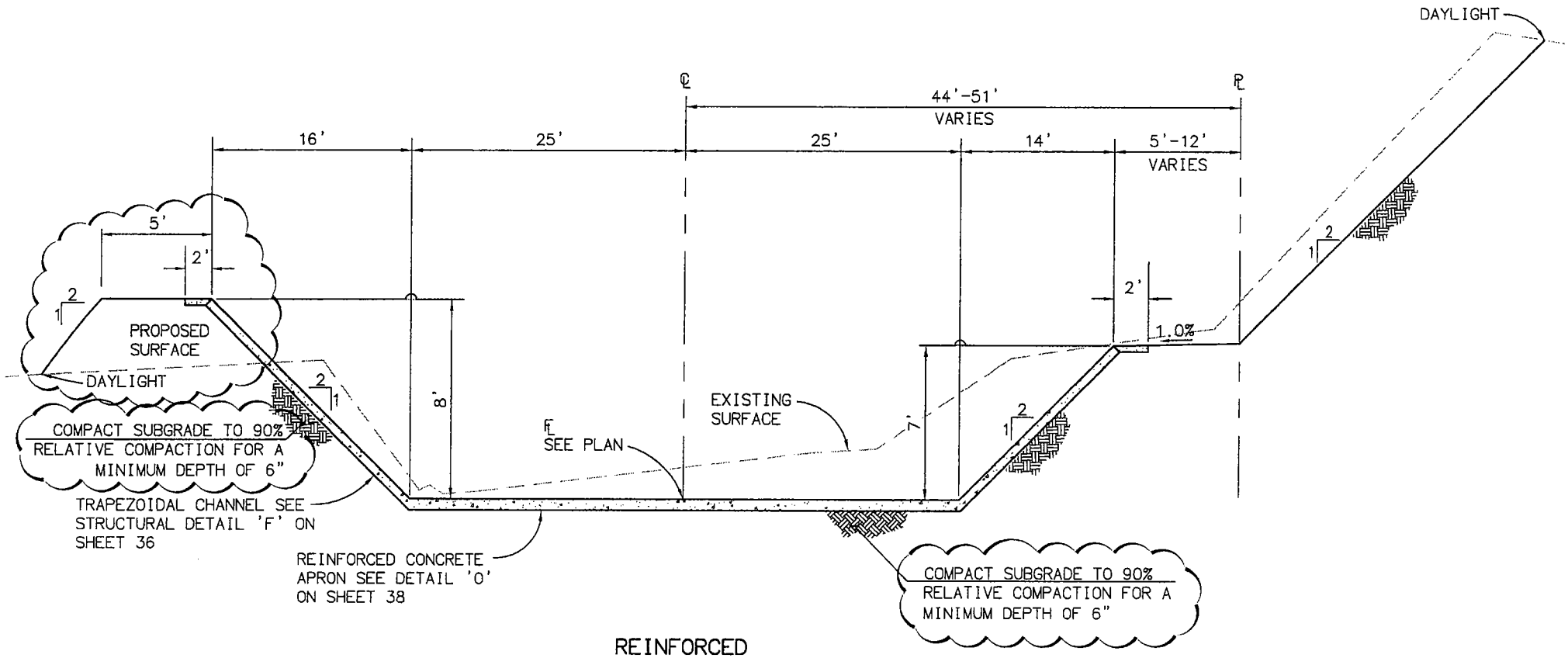

K
26 6

REINFORCED
CONCRETE APRON SECTION

STA 21+95.00 TO 22+66.84
N.T.S.

(ADDENDUM NO. 4)

REVISED CROSS-SECTION FOR
CONCRETE APRON ON SHEET 6

H:\PDATA\25101626\CADD\LAND\DLV\IMPROVE\ADDENDUM DWGS\1626-ADD-13.DWG MNF 9/18/06 8:24 am

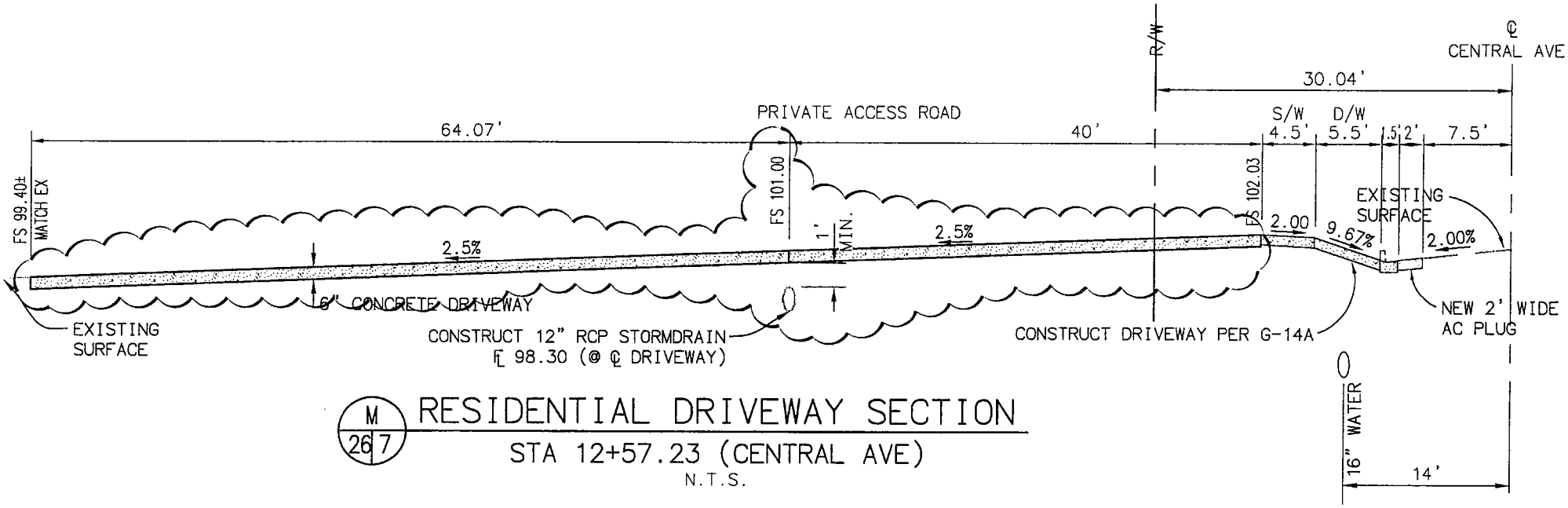

M 26 7

RESIDENTIAL DRIVEWAY SECTION

STA 12+57.23 (CENTRAL AVE)

N.T.S.

(ADDENDUM NO. 4)

REVISED CROSS-SECTION FOR RESIDENTIAL DRIVEWAY ON SHEET 7

H:\PDATA\25101626\CADD\LAND\DLV\IMPROVE\ADDENDUM DWGS\1626-ADD-14.DWG MNF 9/18/06 8:27 am

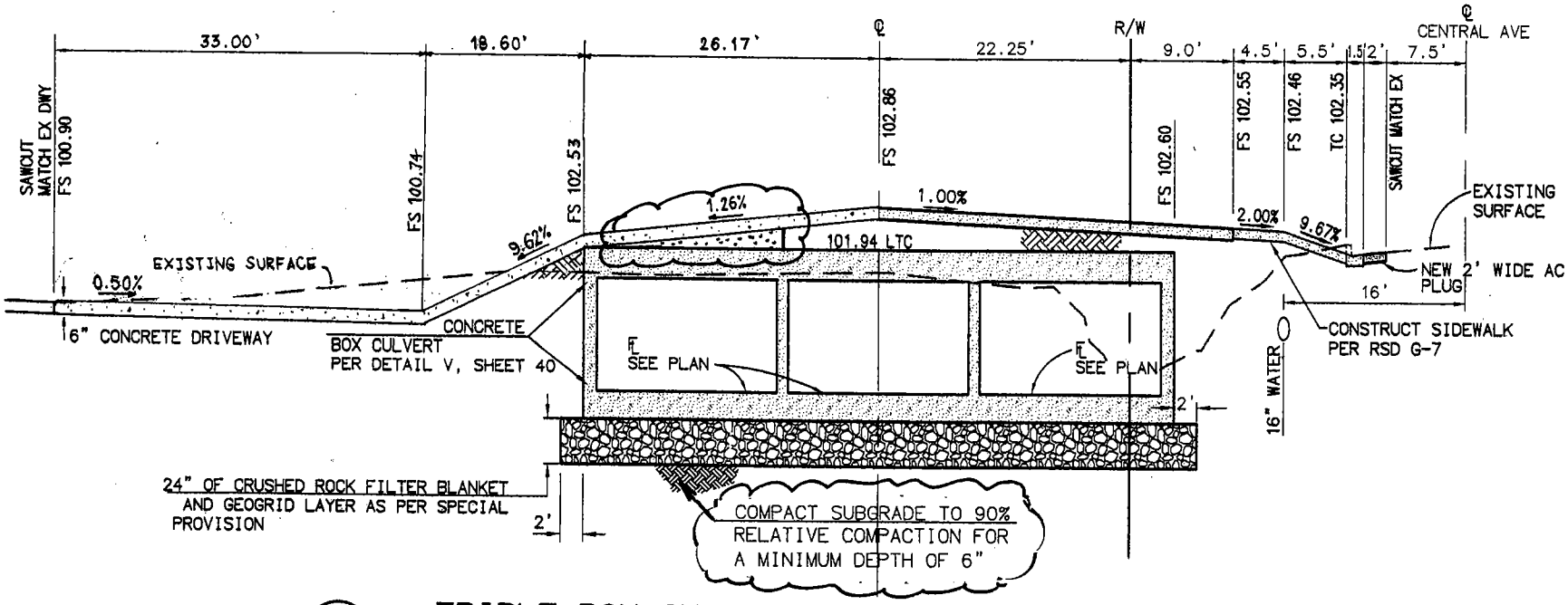

0
27/29

TRIPLE BOX CULVERT RESIDENTIAL DRIVEWAY SECTION

STA 15+32.04 (CENTRAL AVE)

N.T.S.

(ADDENDUM NO. 4)

REVISED CROSS-SECTION FOR TRIPLE BOX CULVERT RESIDENTIAL DRIVEWAY (DETAIL "O") ON SHEET 7

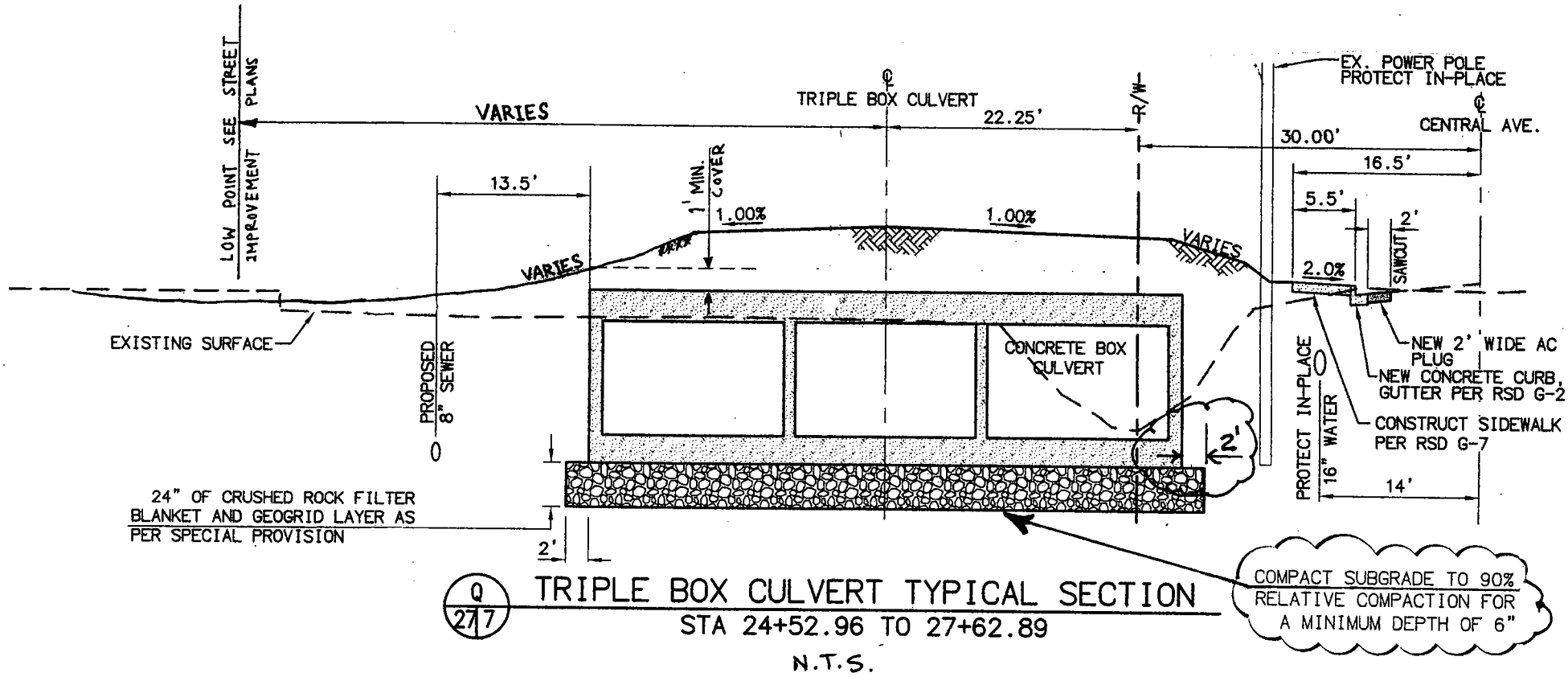

Q 27/7

TRIPLE BOX CULVERT TYPICAL SECTION

STA 24+52.96 TO 27+62.89

N.T.S.

(ADDENDUM NO. 4)

REVISED CROSS-SECTION FOR TRIPLE BOX CULVERT ON SHEET 7

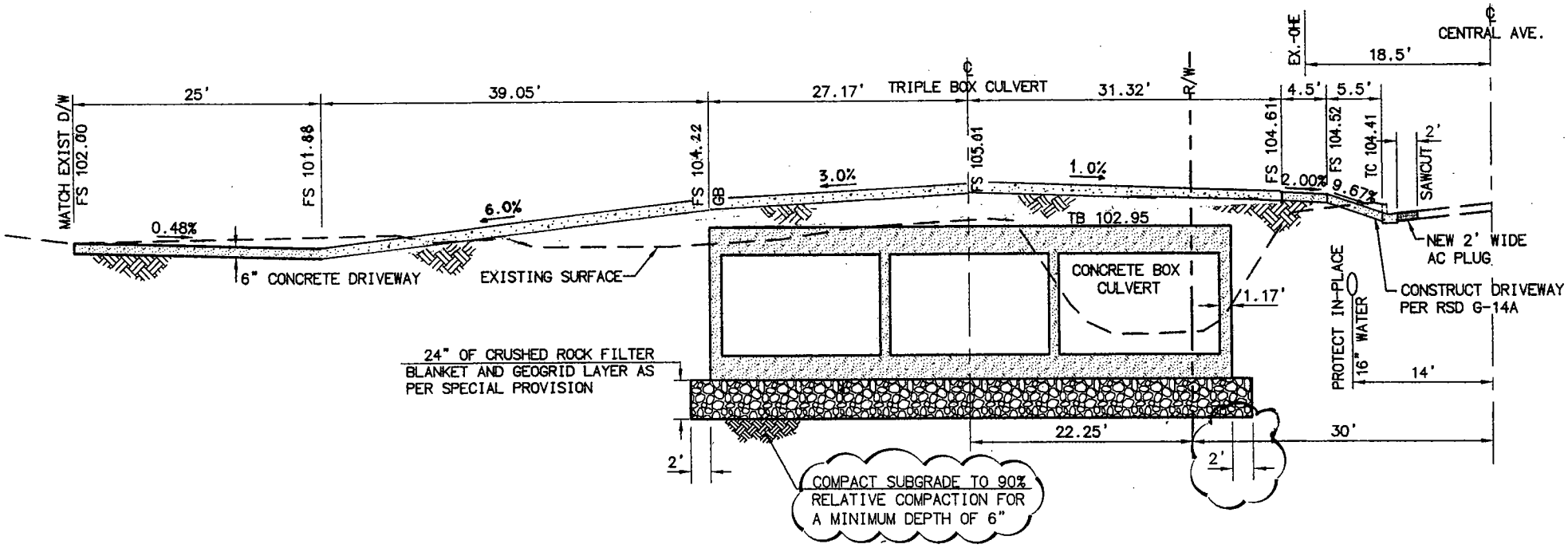

R 27/29

TRIPLE BOX CULVERT RESIDENTIAL DRIVEWAY

STA 17+29.24 (CENTRAL AVE.)

N.T.S.

(ADDENDUM NO. 4)

REVISED CROSS-SECTION FOR TRIPLE BOX CULVERT RESIDENTIAL DRIVEWAY (DETAIL "R") ON SHEET 7

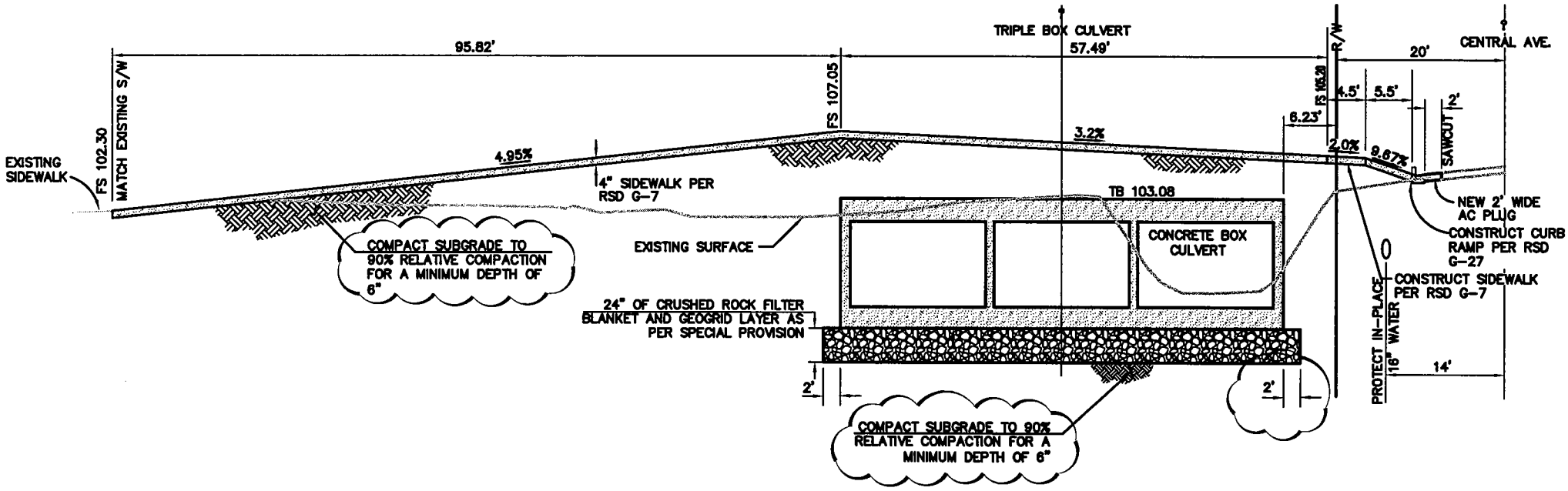

S 27/29

6' WIDE CONCRETE ACCESS WALK

STA 17+60.92 (CENTRAL AVE)

N.T.S.

(ADDENDUM NO. 4)

REVISED CROSS-SECTION FOR 6' WIDE CONCRETE ACCESS WALK ON SHEET 7

H:\PDATA\25101626\CADD\LAND\DLV\IMPROVE\ADDENDUM DWGS\1626-ADD-17.DWG MNF 9/18/06 8:59 am

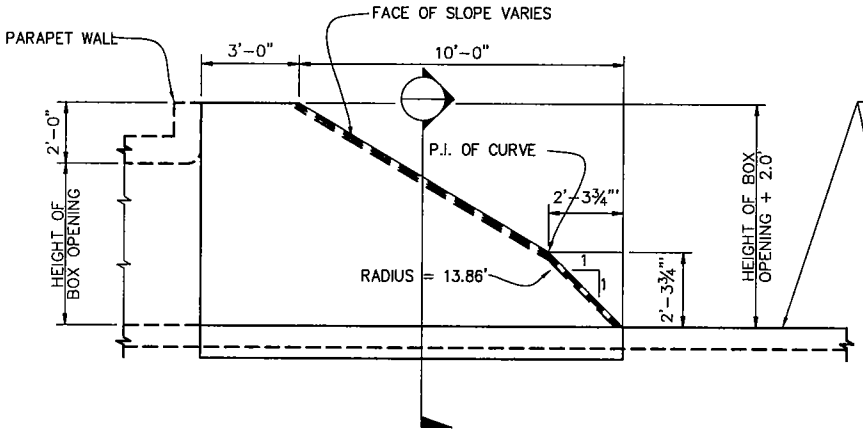

ELEVATION
NOT TO SCALE

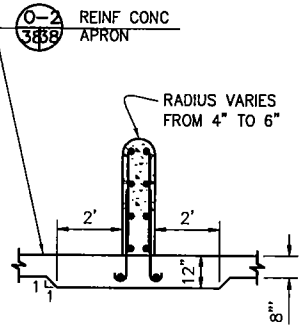

SECTION A-A

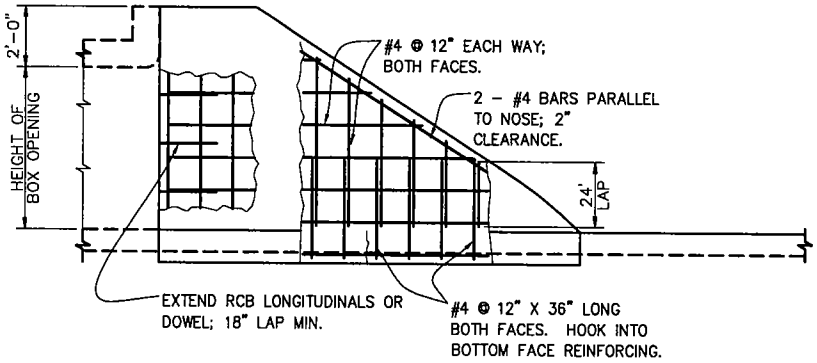

REVEAL
NOT TO SCALE

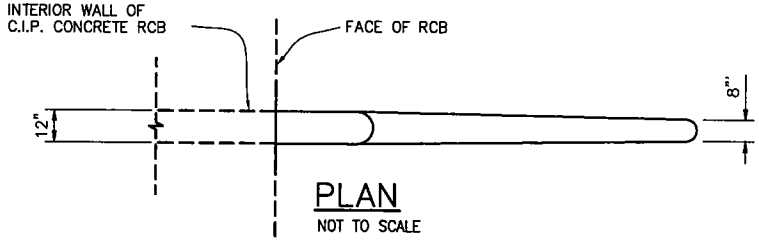

PLAN
NOT TO SCALE

N
23
38
27

DEBRIS NOSE (REVISED)
NO SCALE

(ADDENDUM NO. 4)

UPDATED DEBRIS NOSE DETAIL ON SHEET 38

H:\PDATA\25101626\CADD\LAND\DLV\IMPROVE\ADDENDUM DWGS\1626-ADD-07.DWG MNF 9/18/06 8:19 am

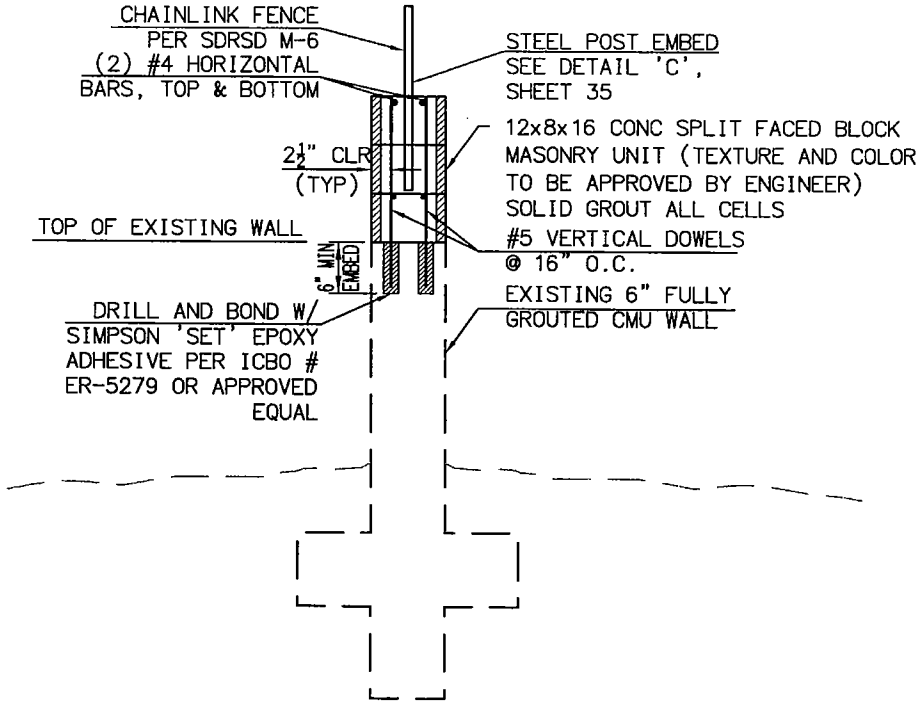

W 22 ADD

EXISTING CMU WALL EXTENSION

NO SCALE

(ADDENDUM NO. 4)

ADDITIONAL DETAIL TO PLAN SET THAT APPLIES TO WALL SECTION 22 ON SHEET 22

H:\PDATA\25101626\CADD\LAND\DLV\IMPROVE\ADDENDUM DWGS\1626-ADD-01.DWG MNF 9/18/06 8:22 am

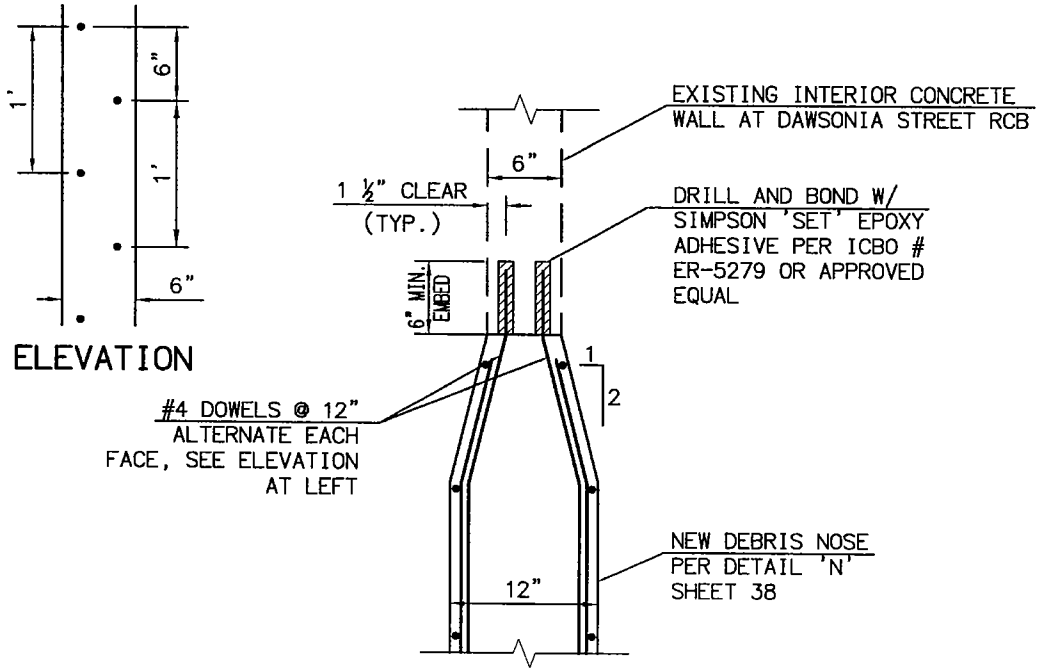

X / 23 ADD DEBRIS NOSE CONNECTION TO DAWSONIA RCB

NO SCALE

(ADDENDUM NO. 4)

ADDITIONAL DETAIL TO PLAN SET FOR DEBRIS NOSE CONNECTION TO EXISTING RCB IN DAWSONIA STREET ON SHEET 23

H:\PDATA\25101626\CADD\LAND\DLV\IMPROVE\ADDENDUM DWGS\1626-ADD-03.DWG MNF 9/18/06 8:21 am

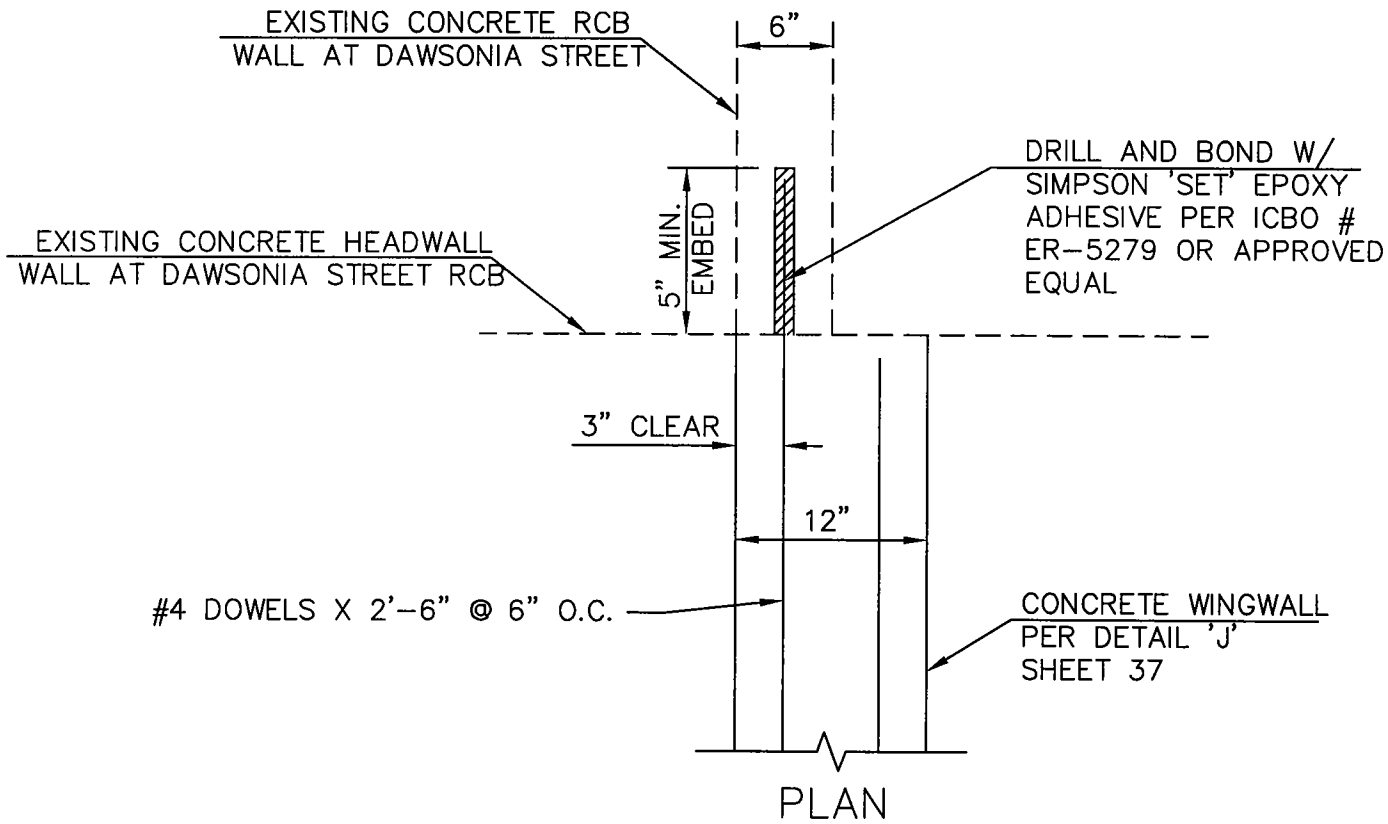

YY 18 ADD

NORTH WINGWALL CONNECTION TO DAWSONIA RCB

NO SCALE

(ADDENDUM NO. 4)

ADDITIONAL DETAIL TO PLAN SET FOR CIP RETAINING WALL CONNECTION TO EXISTING RCB IN DAWSONIA STREET ON SHEET 18

H:\PDATA\25101626\CADD\LAND\DLV\IMPROVE\ADDENDUM DWGS\1626-ADD-08.DWG MNF 9/18/06 8:12 am

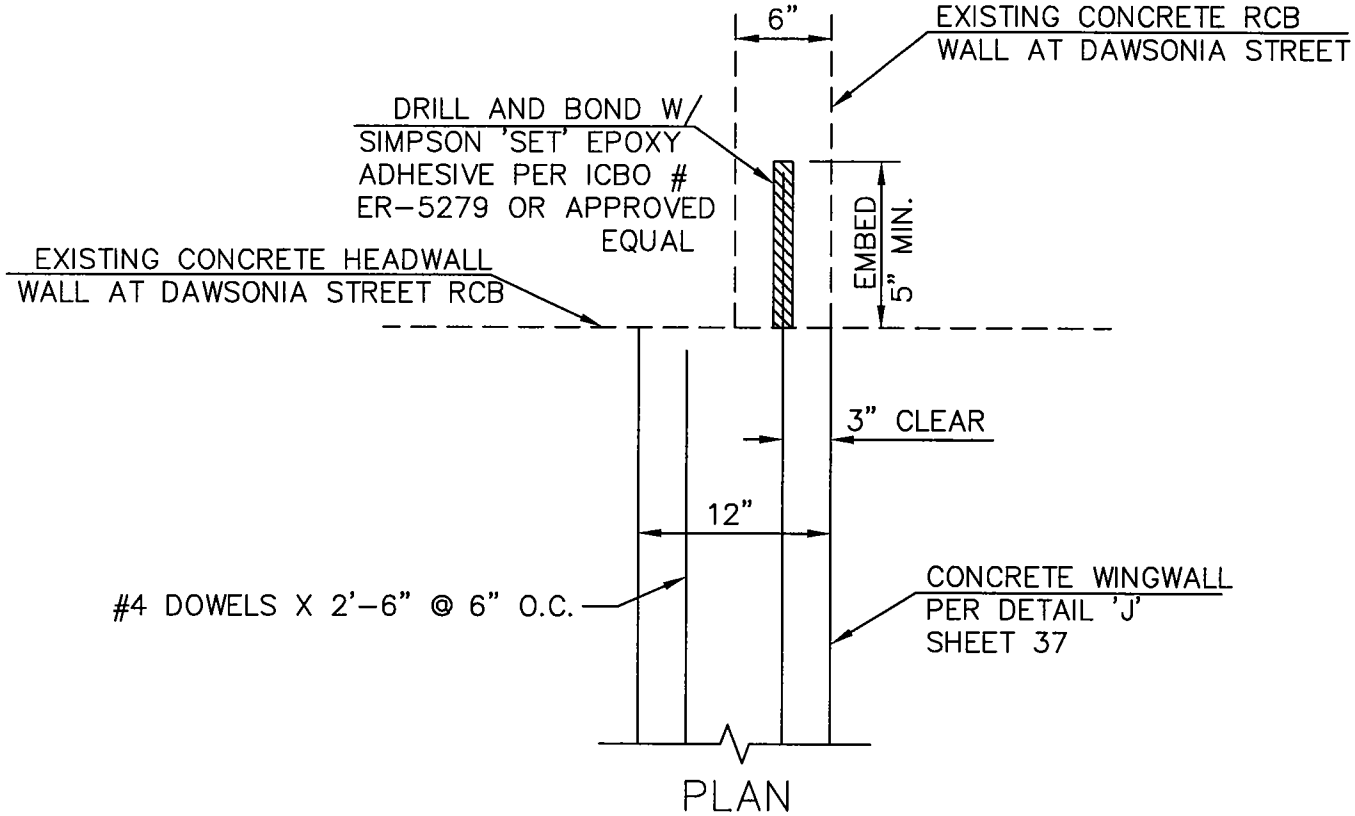

Z / 20ADD SOUTH WINGWALL CONNECTION TO DAWSONIA RCB

NO SCALE

(ADDENDUM NO. 4)

ADDITIONAL DETAIL TO PLAN SET FOR CIP RETAINING WALL CONNECTION TO EXISTING RCB IN DAWSONIA STREET ON SHEET 20

H:\PDATA\25101626\CADD\LAND\DLV\IMPROVE\ADDENDUM DWGS\1626-ADD-23.DWG MNF 9/18/06 8:42 am

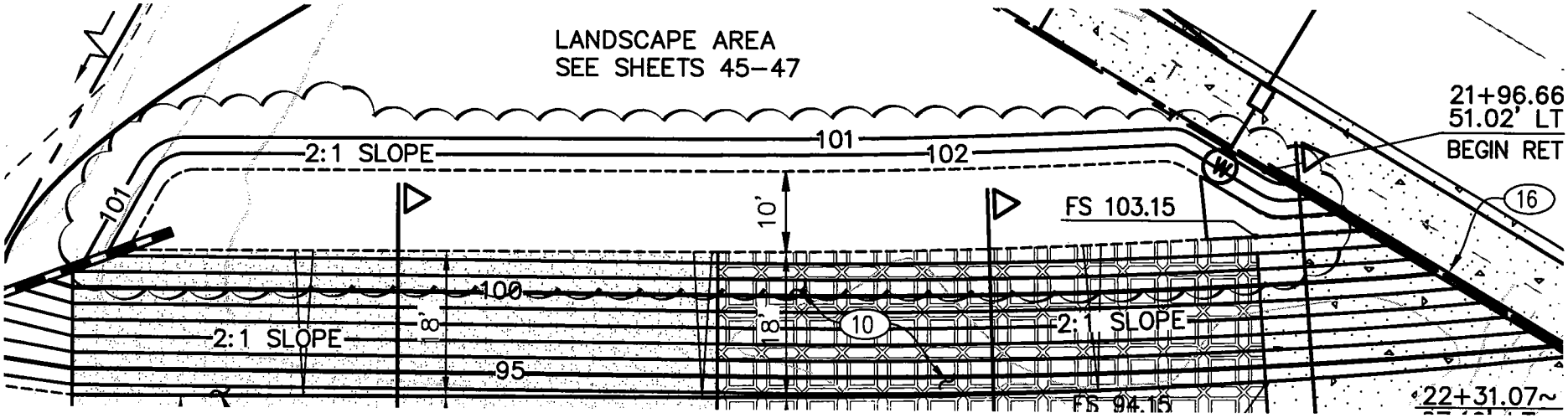

TRIPLE BOX CULVERT
PLAN VIEW (PORTION)

STA. 20+45.00 TO STA. 22+50.00
N.T.S.

(ADDENDUM NO. 4)

REVISED GRADING AT TOP OF CHANNEL SLOPE ON SHEET 26

H:\PDATA\25101626\CADD\LAND\DLV\IMPROVE\ADDENDUM DWGS\1626-ADD-20.DWG MNF 9/18/06 8:33 am

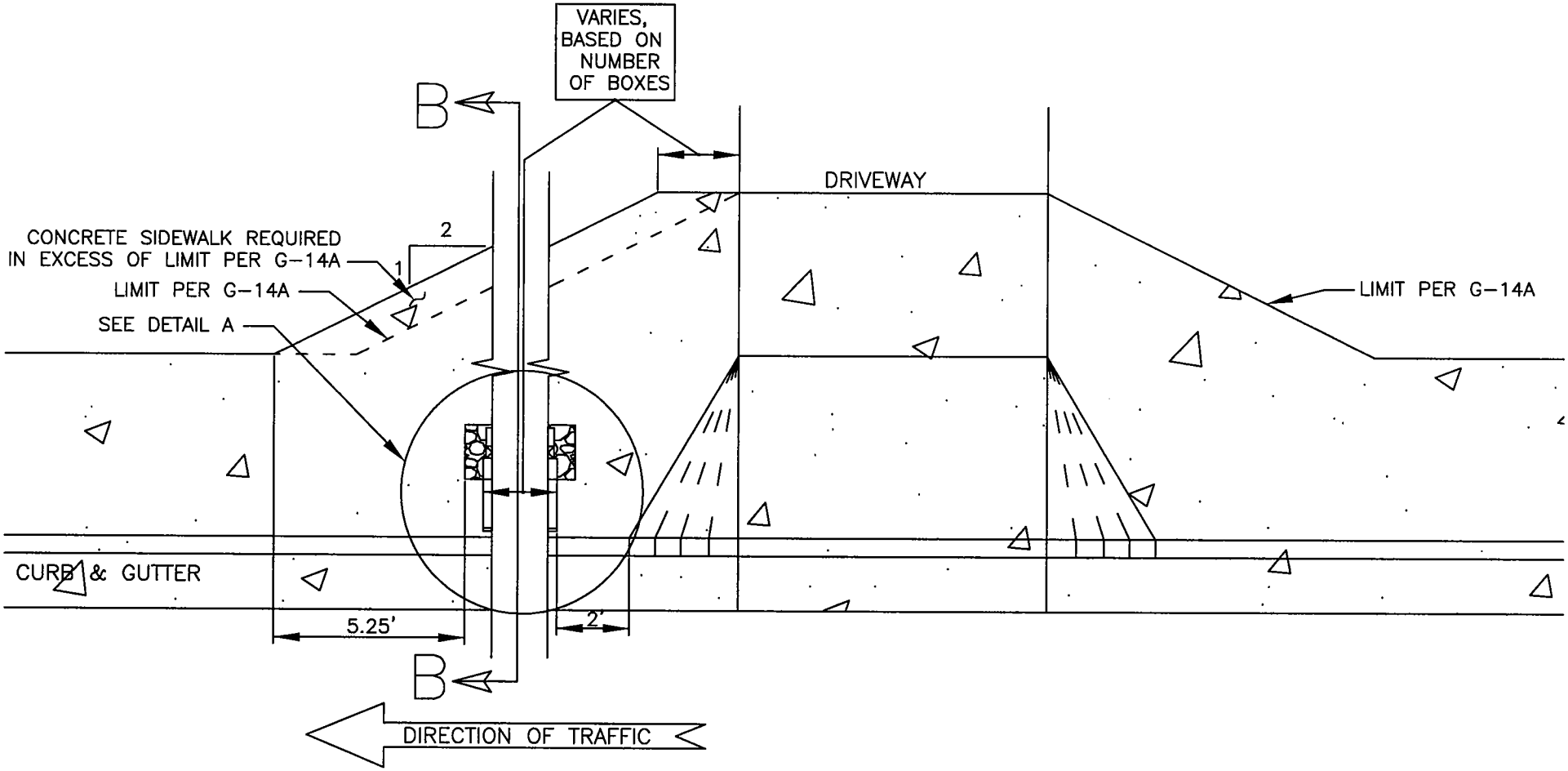

H
28 3A
29

MAILBOX(ES) AT DRIVEWAY

TYP.
N.T.S.

REFERRED IN THE PLANS AS SHEET NO. 3A

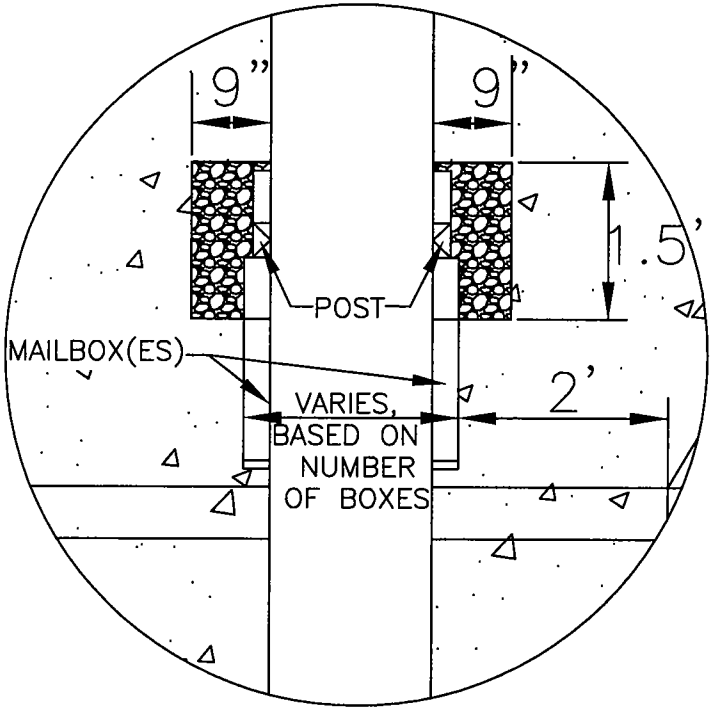

DETAIL A

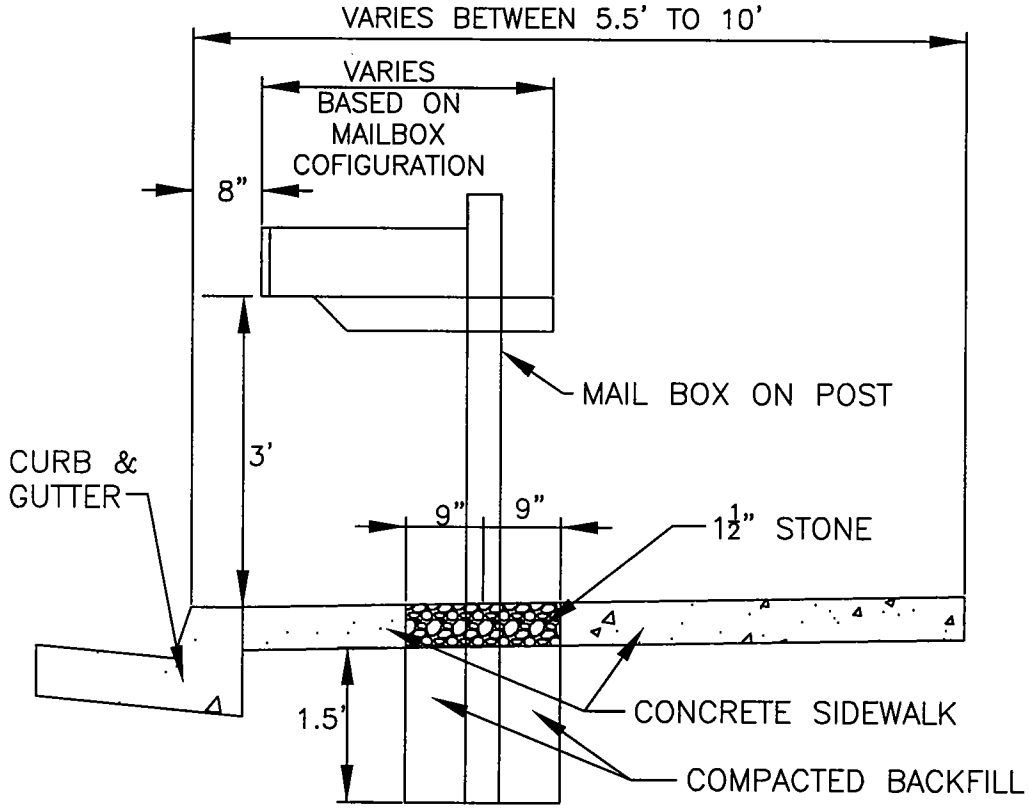

SECTION B–B

REFERRED IN THE PLANS AS SHEET NO. 3A

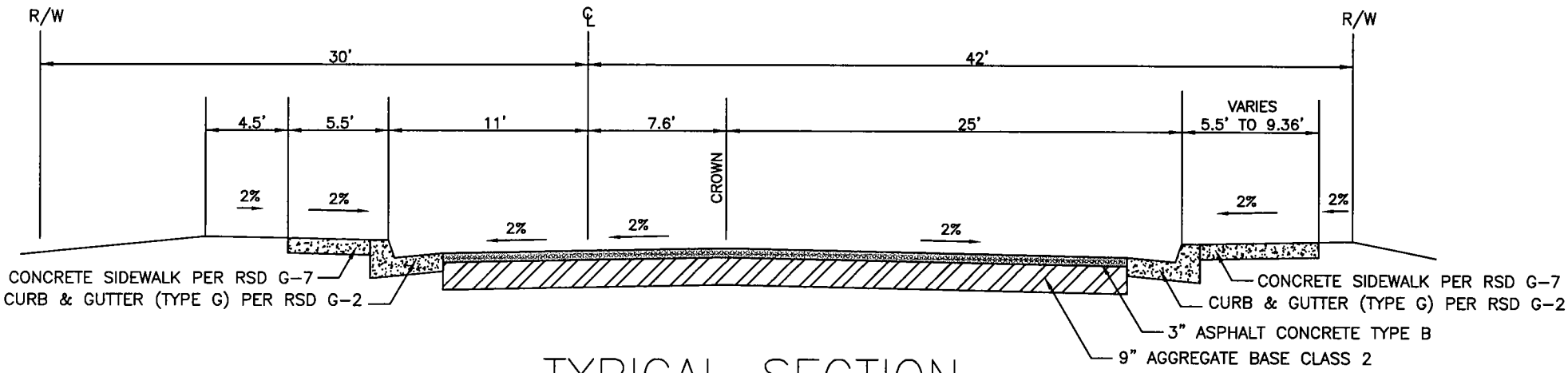

TYPICAL SECTION

STATION 12+40 TO STATION 14+27

NTS

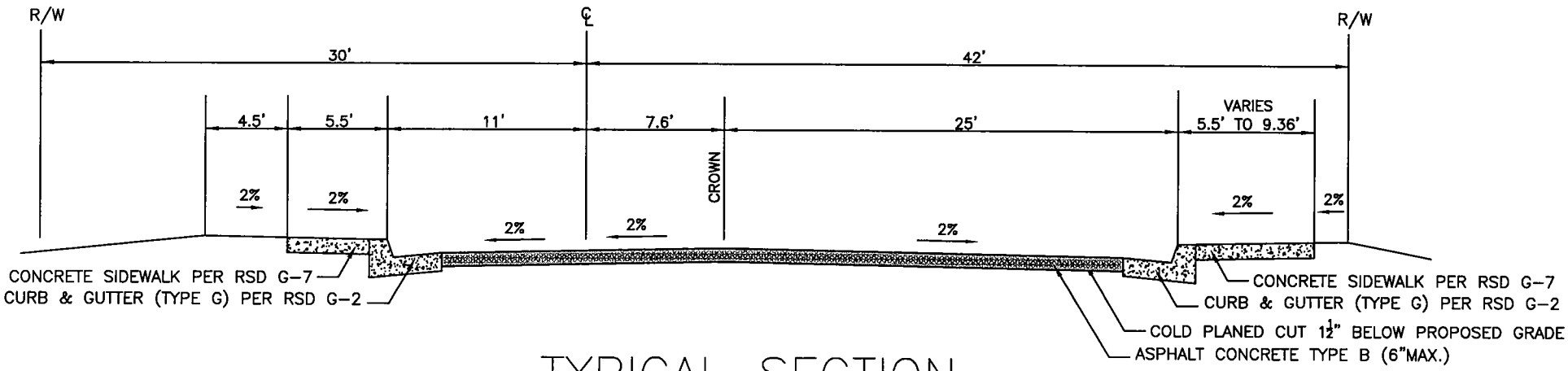

TYPICAL SECTION

STATION 11+80 TO STATION 12+40 &

STATION 14+27 TO STATION 14+82

NTS

REFERRED IN THE PLANS AS SHEET NO. 3A

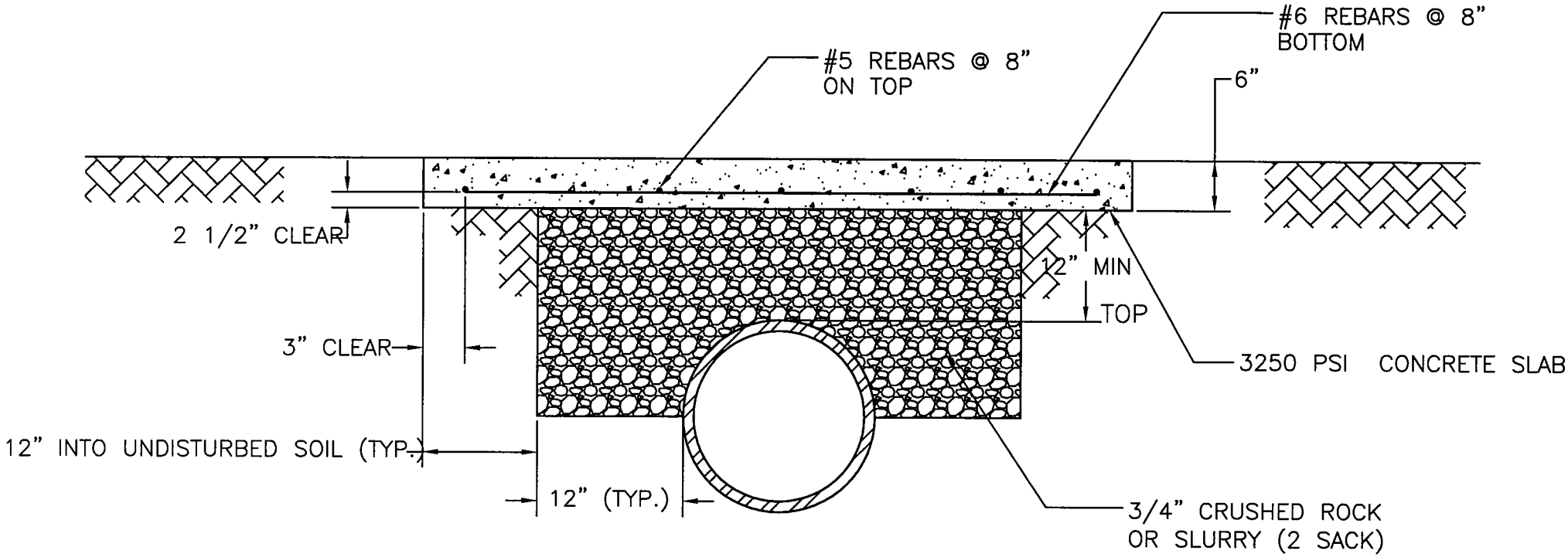

PIPE PROTECTION CONCRETE SLAB
(FROM STA 13+00 TO STA 14+00)

N.T.S.

ADDED TO SHEET NO. 13

(ADDENDUM NO. 4)

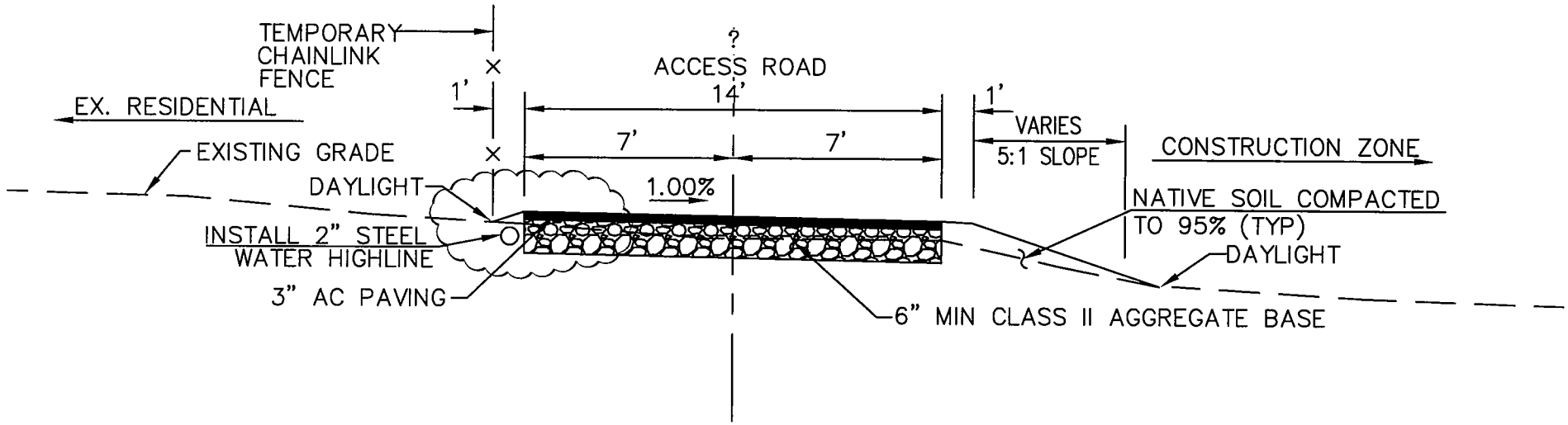

ACCESS ROAD TYPICAL SECTION (TEMPORARY)
N.T.S.

(ADDENDUM NO. 4)

UPDATED ACCESS ROAD PLAN TO REMOVE DAYLIGHT LINE OUTSIDE TCE AND MODIFY SECTION TO REFLECT DAYLIGHT LINE ON SHEET 9

H:\PDATA\25101626\CADD\LAND\DLV\IMPROVE\ADDENDUM DWGS\1626-ADD-18.DWG MNF 9/18/06 8:50 am