County of San Diego

DEPARTMENT OF PUBLIC WORKS

JOHN L. SNYDER
DIRECTOR

5555 OVERLAND AVE, SUITE 2188
SAN DIEGO, CALIFORNIA 92123-1295

(858) 694-2212 FAX: (858) 268-0461
Web Site: sdcdpw.org

May 24, 2007

ADDENDUM NO. 2

TO: Contract Documents for Construction of Mission Road Improvements - Oracle Project No. 1007353

ORIGINAL BID OPENING DATE: June 7, 2007 BID NO.: 2199
NEW BID OPENING DATE: June 21, 2007

This Addendum No. 2 changes the bid opening date, and corrects and clarifies the contract documents.

1. On the front cover, the page following the front cover, and page 1-2 (Notice to Contractors Inviting Bids), change the BID OPENING DATE from "June 7, 2007" to "**June 21, 2007**."

2. Remove page 2-3b and replace with attached page 2-3b (Addendum No. 2). Changes are indicated with a vertical line in the left margin.

3. After page 2-3b (Addendum No. 2), insert attached page 2-3c (Addendum No. 2).

4. Remove page 2-4 and replace with attached page 2-4 (Addendum No. 2).

5. On page 4-2, at "**1. Beginning of Work, Time of Completion and Liquidated Damages**":

   a) In the second paragraph change the phrase "eighty (80) working days", to read "one hundred seventy (170) working days."

   b) In the third paragraph change phrase "liquidated damages of one thousand six hundred dollars ($1,600)" to read "liquidated damages of eight hundred dollars ($800)."

6. Remove page 5-2 and replace with attached page 5-2 (Addendum No. 2).

7. After page 5-52, insert attached specification for "**33. Electric, Telephone and Cable Television Service Facilities**" starting with page 5-53 (Addendum No. 2) through Page 5-55 (Addendum No. 2).

8. After page 5-55 (Addendum No. 2), insert attached specification for "**34. Wrought Iron Fence**", page 5-56 (Addendum No. 2).

9. Remove pages 8-2 and 8-2a and replace with attached pages 8-2 (Addendum No. 2), and 8-2a (Addendum No. 2).

10. After page 8-15, insert attached page 8-15a (Addendum No. 2).

11. After page 8-34, insert attached page 8-34a (Addendum No. 2).

12. After page 8-58, insert attached pages 8-59 (Addendum No. 2) through 8-154 (Addendum No. 2).

13. After page 8-154 (Addendum No. 2), insert plan sheet pages 8-155 (Addendum No. 2), 8-156 (Addendum No. 2) and 8-157 (Addendum No. 2).

14. Remove sheets 3 of 9 and 4 of 9 of the project plans and replace with attached sheet 3 of 9 (Addendum No. 2) and sheet 4 of 9 (Addendum No. 2).

This addendum is required to be inserted in the Contract Documents by the bidder and acknowledged by the bidder on page 2-2 of the Proposal to the Board, at the time of submitting the bid.

GREGORY W. RICHARDS, Senior Civil Engineer
Department of Public Works

GWR:RJ:pdo

cc: Terry Rayback (O340); Sirous Deylamian (O340); Steve Ron (O340); Ramin Abidi (O90); Mathew Brady (O90); Roberta Lamp (O32)

Attachments forming a part of this Addendum No. 2

1. Page 2-3b (Addendum No. 2)
2. Page 2-3c (Addendum No. 2)
3. Page 2-4 (Addendum No. 2)
4. Page 5-2 (Addendum No. 2)
5. Page 5-53 (Addendum No. 2)
6. Page 5-54 (Addendum No. 2)
7. Page 5-55 (Addendum No. 2)
8. Page 5-56 (Addendum No. 2)
9. Page 8-2 (Addendum No. 2)
10. Page 8-2a (Addendum No. 2)
11. Page 8-15a (Addendum No. 2)
12. Page 8-34a (Addendum No. 2)

Attachments forming a part of this Addendum No. 2 (Continued)

13. Pages 8-59 (Addendum No. 2) through 8-154 (Addendum No. 2)
14. Page 8-155 (Addendum No. 2)
15. Page 8-156 (Addendum No. 2)
16. Page 8-157 (Addendum No. 2)
17. Sheet 3 of 9 (Addendum No. 2)
18. Sheet 4 of 9 (Addendum No. 2)

BID SCHEDULE (Continued)

ITEM NO.	DESCRIPTION	ESTIMATED QUANTITY	UNIT OF MEASURE	UNIT PRICE (IN FIGURES)	TOTAL (IN FIGURES)
40.	Erosion Control (Type D)	700	SY		
41.	Temporary Stabilized Construction Entrance	1	EA		
42.	Temporary Gravel Bag	615	EA		
43.	Temporary Concrete Washout Facility	1	EA		
44.	Temporary Fiber Roll	1,200	LF		
45.	Traffic Control	LS	LS	LS	
46.	BMP Maintenance Cost Sharing	5,000	DLR	1.00	5,000.00
47.	Field Orders	10,000	DLR	1.00	10,000.00
48.	Wrought Iron Fence	40	LF		
				BASE BID TOTAL	

Name of Bidder_____

BID SCHEDULE (Continued)

ADDITIVE ALTERNATE 1 – UNDERGROUNDING SDG&E FACILITIES

ITEM NO.	DESCRIPTION	ESTIMATED QUANTITY	UNIT OF MEASURE	UNIT PRICE (IN FIGURES)	TOTAL (IN FIGURES)
1. (S)	Undergrounding (SDG&E)	LS	LS	LS	
				ADDITIVE ALTERNATE 1 TOTAL	

ADDITIVE ALTERNATE 2 – UNDERGROUNDING AT&T FACILITIES

ITEM NO.	DESCRIPTION	ESTIMATED QUANTITY	UNIT OF MEASURE	UNIT PRICE (IN FIGURES)	TOTAL (IN FIGURES)
1. (S)	Undergrounding (AT&T)	LS	LS	LS	
				ADDITIVE ALTERNATE 2 TOTAL	

ADDITIVE ALTERNATE 3 – UNDERGROUNDING TIME WARNER FACILITIES

ITEM NO.	DESCRIPTION	ESTIMATED QUANTITY	UNIT OF MEASURE	UNIT PRICE (IN FIGURES)	TOTAL (IN FIGURES)
1. (S)	Undergrounding (Cable TV)	LS	LS	LS	
				ADDITIVE ALTERNATE 3 TOTAL	

BASE BID TOTAL.....$_____

ADDITIVE ALTERNATE 1 TOTAL.....$_____

ADDITIVE ALTERNATE 2 TOTAL.....$_____

ADDITIVE ALTERNATE 3 TOTAL.....$_____

TOTAL OF BASE BID + ADDITIVE ALTERNATES 1, 2 AND 3.....$_____

If this Proposal shall be accepted and the undersigned shall fail to contract as aforesaid and to give in sums as stated in the Notice to Contractors Inviting Bids, both a faithful Performance Bond, and a Payment Bond as required by Chapter 5 (commencing at Section 3225) and Chapter 7 (commencing at Section 3247), Title 15, Part 4, Division 3, of the California Civil Code, with surety satisfactory to the Owner within the time specified in Section 3-1.03 of the Standard Specifications after the undersigned has received notice of the award of the Contract from the Owner and that the Contract is ready for signature, the Owner may, at its option, determine that the bidder has abandoned the Contract, and thereupon this Proposal and the acceptance thereof shall be null and void, and the forfeiture of the security accompanying this Proposal shall operate and the same shall be the property of the Owner.

Bids are required for the entire work shown in the Base Bid Schedule and for Additive Alternates 1, 2, and 3. The lowest bid shall be the lowest total bid price for the Base Bid plus Additive Alternates 1, 2 and 3.

The bidder shall set forth for each item of work, in clearly legible figures, a unit price and a total for the item in the respective spaces provided for this purpose. In the case of unit basis items, the amount set forth under the "Total" column shall be the extension of the unit price bid on the basis of the estimated quantity for the item.

In case of discrepancy between the unit price and the total set forth for the item, the unit price shall prevail; provided, however, if the amount set forth as a unit price is ambiguous, unintelligible or uncertain for any cause, or is omitted, or in the case of unit basis items, is the same amount as the entry in the "Total" column, then the amount set forth in the "Total" column for the item shall prevail in accordance with the following:

1. As to lump sum items, the amount set forth in the "Total" column shall be the unit price.

2. As to unit basis items, the amount set forth in the "Total" column shall be divided by the estimated quantity for the item, and the price thus obtained shall be the unit price.

The quantities listed in the Proposal are approximate only. Payment for work done will be made at the contract unit prices bid as applied to the quantities actually constructed or installed.

Award of the Contract, if awarded, will be to the lowest responsible bidder, for the base bid plus any combination of the additive alternates, as determined by the Owner, subject to the Owner's right to reject any or all bids and to waive any informality or irregularity in the bids or bidding. Bids in which the prices are obviously unbalanced may be rejected.

Award of the Contract, if awarded, will be made to the lowest responsible bidder within forty-five (45) calendar days from the date specified for the opening of bids; within sixty (60) calendar days to the second lowest responsible bidder if the first does not execute the Contract; and within seventy-five (75) calendar days to the third lowest responsible bidder if neither the first nor the second bidder executes the Contract.

SPECIAL PROVISIONS
FOR
CONSTRUCTION OF
MISSION ROAD IMPROVEMENTS
ORACLE PROJECT NO. 1007353

PART V. TECHNICAL PROVISIONS

TABLE OF CONTENTS

1. Water Pollution Control 5-3
2. Project Identification Sign 5-13
3. Clearing and Grubbing 5-13
4. Trench Safety and Shoring of Excavations 5-16
5. Existing Highway Facilities 5-16
6. Building Demolition 5-17
7. Reconstruct Rock Wall 5-20
8. Watering 5-20
9. Earthwork 5-20
10. Aggregate Base 5-20
11. Asphalt Concrete 5-21
12. Preparation of Surface 5-23
13. Finishing Roadway 5-24
14. Minor Concrete 5-24
15. Sidewalk Underdrain 5-25
16. Minor Drainage Structure 5-26
17. PCV Pipe 5-26
18. Concrete Minor Structures 5-26
19. Reinforcement 5-27
20. Masonry Retaining Walls 5-27
21. Remove Traffic Stripe and Pavement Markings 5-28
22. Painted Traffic Striping and Pavement Markings 5-29
23. Pavement Markers 5-30
24. Paint Curb 5-31
25. Roadside Signs 5-31
26. Modify Traffic Signal and Safety Lighting System 5-32
27. Erosion Control (Type D) 5-44
28. Temporary Stabilized Construction Entrance 5-47
29. Temporary Gravel Bag Protection 5-48
30. Temporary Fiber Rolls 5-50
31. Temporary Concrete Washout Facility 5-51
32. Traffic Control 5-52
33. Electric, Telephone and Cable Television Service Facilities 5-53
34. Wrought Iron Fence 5-56

33. Electric, Telephone and Cable Television Service Facilities

General

Installation of underground electrical, telephone and cable television facilities shall conform to these Special Provisions.

Joint utility trench for underground electric, telephone and cable television shall be in accordance with the requirements of the utility companies and San Diego Regional Standard Drawing M-15.

The Contractor shall complete the trenching, construction of substructures, installation of the conduit and trench restoration for the undergrounding within the road right of way and for the undergrounding of the service laterals from the road right of way to the individual residences and businesses, in accordance with the plans and specifications. Panel modification and connection of utilities to the residence or business to be performed by others.

The Contractor shall restore the area of trenching from the road right of way to the individual residences and businesses to its original condition following conduit installation using like materials to the satisfaction of the Engineer.

SDG&E, AT&T and Time Warner Communications are responsible for installing the cable.

AT&T and Time Warner Communications are responsible for the telephone and cable television hookups of the residences and businesses.

SDG&E is responsible for the electrical hookup of the residences and businesses.

Whenever appearing in the Contract Documents, the terms "Developer" shall be deemed to mean "Contractor".

Electrical Facilities

The underground electrical facilities shall be constructed in accordance with the SDG&E Construction Order Nos. 2740260 (SDG&E Project Plans), SDG&E 2003 Service Standards & Guide and SDG&E 2002 Underground Construction Standards contained in Part VIII of these Contract Documents.

Contractor shall provide all substructures (concrete products, conduits) plus trenching, backfill, and pavement repair.

SDG&E will furnish and install cable and transformers and complete conversion installation.

The contract lump sum price paid for undergrounding (SDG&E) shall include full compensation for furnishing all labor, materials (including conduit, aggregate base and asphalt concrete), tools, equipment, and incidentals and for doing all the work involved in the SDG&E undergrounding, complete in place, as shown on the plans, as specified in the Standard Specifications and these Special Provisions, and as directed by the Engineer.

Telephone Facilities

The underground telephone facilities shall be constructed in accordance with the AT&T project plans (5 sheets) contained in Part VIII of these Contract Documents and the AT&T Technical Guide for Underground Construction.

The Contractor shall take special care to avoid either damage or interruption of SBC service during all phases of the excavation.

The exact location of all AT&T conduits and facilities within the excavation area shall be ascertained by the Contractor by potholing in advance of using equipment that may damage such facilities or interfere with SBC service.

The Contractor shall coordinate through the County's Engineer and the AT&T inspector for the relocation or adjustment of AT&T conduits and facilities. Coordination and work for AT&T relocations or modifications at the Contractor's request which aid in construction is solely the Contractor's responsibility. No additional compensation shall be made to the Contractor for such coordination or work.

The cost of any shoring, bracing, and excavation relative to the installation of said curb inlet deemed necessary for the protection of AT&T facilities, shall be included in the bid price for which such activity is appurtenant and no separate payment shall be made therefore.

AT&T facilities either permanently or temporarily relocated or supported by the owner shall be protected in place by the Contractor.

AT&T will provide on sight-inspection for its installation. The AT&T Inspector Mike Gorzo at (760) 489-3002, shall be notified 48 hours in advance of a pre-construction meeting and inspections. Changes or additions shall be approved by AT&T representative in writing under a separate agreement with the Contractor.

All conduit and closures are to be placed per AT&T Company specifications. All radii of 80' or less will be encased in 3 ½ sack slurry. 3 sack slurry will be used in the excavation around all manholes. All ducts at poles will be Schedule 40, sunlight resistant, conduit or E bends and will be terminated 6" above ground line and strapped. All ducts at pedestal locations will be at least 12" above ground line. All ducts at poles and pedestals will be capped. Appropriate size polyrope will be placed in all conduit, and AT&T provided 6" warning tape will be placed in all main trench one foot below finish grade. AT&T provided EM markers will be placed at stub ducts. The cost for placing the EM markers is included in the contract lump sum price paid for undergrounding (AT&T). Measurements with wire ties/marked prints will be provided at the end of the trenching and construction of AT&T substructures in their entirety. Wire ties/marked prints to be forwarded to either the AT&T Governmental Liaison or Inspector or mailed to:

AT&T Telephone Company
Attention: Joint Trench Desk
4220 Arizona Street, Room 200
San Diego, CA 92104

The contract lump sum price paid for undergrounding (AT&T) shall include full compensation for furnishing all labor, materials (including conduit, aggregate base and asphalt concrete), tools, equipment, and incidentals and for doing all the work involved in the AT&T undergrounding,

complete in place, as shown on the plans, as specified in the Standard Specifications and these Special Provisions, and as directed by the Engineer.

Cable Television Facilities

The underground cable television facilities shall be constructed in accordance with the Time Warner Communications plans contained in Part VIII of these Contract Documents and Time Warner Communications specifications.

All vaults, handholes, conduit, sweeps, couplers, pullrope and glue will be furnished by Time Warner Communications.

Contractor to provide a location and a contact for conduit delivery. A minimum of 24 hour notice required for deliveries.

All Time Warner conduits are to be placed by Contractor at a depth whereby the future road improvement will not damage or expose the newly placed conduits due to road cuts or scarifications. All such damages and repairs will be at Contractor expense.

All Time Warner conduits placed are to maintain 24" to 30" of cover at final grade.

Contractor to place Time Warner conduits in locations that will not infract SDG&E and AT&T facilities.

Contractor to place Adelphia conduits a minimum of 3 feet away from all driveways.

All multiple conduits are to be strapped together with duct tape in trenches as well as pedestal or vault locations.

Time Warner communications will install pedestals.

Contractor to place pull lines in all Time Warner backbone conduits.

Contractor to provide 2 sets of Time Warner as-builts 10 days after completion of job.

The contract lump sum price paid for undergrounding (cable TV) shall include full compensation for furnishing all labor, materials (including aggregate base and asphalt concrete), tools, equipment, and incidentals and for doing all the work involved in the Time Warner Communications undergrounding, complete in place, as shown on the plans , as specified in the Standard Specifications and these Special Provisions, and as directed by the Engineer.

34. Wrought Iron Fence

Wrought Iron fence shall conform to the provisions in Section 80, "Fences," of the Standard Specifications and these Special Provisions.

The wrought iron fence material shall be fastened to wrought iron posts embedded in the masonry retaining wall stem.

New wrought iron fence shall be equivalent to the existing wrought iron fence in color, type and quality. Existing wrought iron fence is BFC Ornamental Iron Light Regal Powder Coat.

Wrought iron fence will be measured and paid for by the linear foot in the same manner specified for chain link fence in Section 90-4 "Chain Link Fence" of the Standard Specifications.

PART VIII. STANDARD DRAWINGS, STANDARD PLANS AND PROJECT PLANS

Pre-Demolition Asbestos/Lead Survey: 205 & 219 West Mission Road, Fallbrook, Dated May 9, 2006 (11 pages) 8-3

Supplemental Drawings
Winterhaven & Mission Rd Soundwall 8-14
Project Identification Sign 8-15
BFC Ornamental Iron 8-15a

San Diego Area Regional Standard Drawings (April 2006)
C-2 Masonry Retaining Wall Type 2 (Live Load Surcharge or Sloping Backfill) 8-16
D-2 Curb Inlet – Type B 8-17
D-11A Inlets and Cleanouts Notes and Details 8-18
D-12 Curb Inlet Opening 8-19
D-27 Sidewalk Underdrain Pipe 8-20
G-2 Curb and Gutter - Combined 8-21
G-5 Dikes – Asphalt Concrete 8-22
G-7 Sidewalk – Typical Sections 8-23
G-9 Sidewalk Joint Locations 8-24
G-10 Concrete Joint Details 8-25
G-12 Cross Gutter 8-26
G-14A Concrete Driveway (Contiguous Sidewalk) 8-27
G-27 Curb Ramp – Types A and B (New Construction) 8-28
G-29 Curb Ramp – Type C (For Existing Sidewalk) 8-29
G-30 Truncated Domes 8-30
G-31 Curb Ramp – Type D 8-31
G-32 General Notes for Curb Ramps 8-32
M-19 Fire Hydrant Markers 8-33
M-26 Concrete Steps 8-34
M-15 Joint Trench Location 8-34a

San Diego County Design Standards (May 2005)
DS-07 Asphalt Concrete Driveway 8-35

State of California, Department of Transportation, Standard Plans (May 2006)
A20A Pavement Markers and Traffic Lines Typical Details 8-36
A20B Pavement Markers and Traffic Lines Typical Details 8-37
A20C Pavement Markers and Traffic Line Typical Details 8-38
A20D Pavement Markers and Traffic Lines Typical Details 8-39
A24A Pavement Markings Arrows 8-40
A24B Pavement Markings Arrows 8-41
A24C Pavement Markings Symbols and Numerals 8-42
A24D Pavement Markings Words 8-43
A24E Pavement Markings Words and Crosswalks 8-44
A73C Delineators, Channelizers and Barricades 8-45
RS1 Roadside Sign Typical Installation Details No. 1 8-46
RS2 Roadside Signs Wood Post Typical Installation Details No. 2 8-47
RS4 Roadside Signs Typical Installation Details No. 4 8-48

Certified DVBE Firms (10 pages) 8-49

SDG&E – DPSS – UG Construction Order Face Sheet (2 pages) 8-59
SDG&E – DPSS – Unit Summary by Location – Customer Work (11 pages) 8-61
SDG&E – DPSS – Construction Order Material List (2 pages) 8-72
SDG&E – DPSS – Construction Order – Customer Copy (37 pages) 8-74

SDG&E Construction Standards

Page No. 3421.1 Single-phase Transformer/Utility Equipment Pad 8-111
Page No. 3421.2 Single-phase Transformer/Utility Equipment Pad 8-112
Page No. 3421.3 Single-phase Transformer/Utility Equipment Pad 8-113
Page No. 3421.4 Single-phase Transformer/Utility Equipment Pad 8-114
Page No. 3421.5 Single-phase Transformer/Utility Equipment Pad 8-115
Page No. 4510.1 Trench Ground Wire (Preferred I) 8-116
Page No. 4510.2 Trench Ground Wire (Alternate) 8-117
Page No. 4510.3 Trench Ground Wire (Preferred I or Alternate) 8-118
Page No. 3316.1 Handhole Equipment Enclosure 8-119
Page No. 3316.2 Handhole Equipment Enclosure (Inside Dimensions-5'x8'-6") 8-120
Page No. 3316.3 Handhole Equipment Enclosure (Inside Dimensions-5'x8'-6") 8-121
Page No. 3316.4 Handhole Equipment Enclosure (Inside Dimensions-5'x8'-6") 8-122
Page No. 3376.1 Conduit-Encased Multi-Conduit Installation 8-123
Page No. 3376.2 Conduit-Encased Multi-Conduit Installation 8-124
Page No. 3376.3 Conduit-Encased Multi-Conduit Installation 8-125
Page No. 3373.1 Conduit and Conduit Fittings 8-126
Page No. 3373.2 Conduit and Conduit Fittings – ED and DB 8-127
Page No. UG 4204.1 Cable Pole Riser Installation 8-128
Page No. UG 4204.2 Cable Pole Riser Installation 8-129
Page No. UG 4204.3 Cable Pole Riser Installation 8-130
Page No. UG 4204.4 Cable Pole Riser Installation 8-131
Page No. UG 4204.5 Cable Pole Riser Installation 8-132

Gas Standard – Distribution/Transmission

General Excavation Requirements (4 pages) 8-133
Imported or Native Backfill (2 pages) 8-137
Specifications for Base (Padding) and Shading Material (4 pages) 8-139
General Conditions for Underground Electric Distribution, Service Systems Construction and Gas Trench (12 pages) 8-143

SDG&E Project Plans

Sheet 1 of 1 – SDG&E Electric Construction Order OH/UG Base Drawing 8-155

AT&T Project Plan (1 sheet) 8-156

Time Warner Project Plan (1 sheet) 8-157

BFC Ornamental Iron

LIGHT REGAL
Powder Coat

PANELS

PICKET POSITION

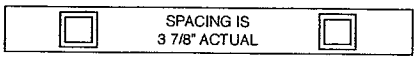

- 1" Square Top & Bottom Rail, 16 ga.
- 5/8" Square Pickets, 18 ga.
- 4" (3 7/8" actual) Spacing between Pickets
- Powder Coat Black

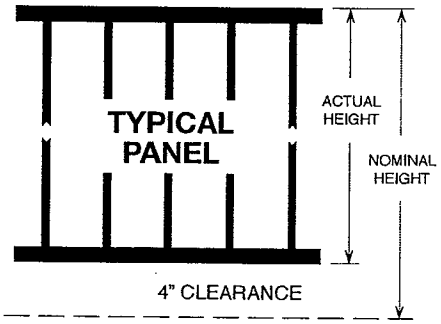

LIGHT REGAL, POWDER COAT
For Pre-Galvanized add 35%

Panels

	Nominal Height Actual Height	3' 32"	3 1/2' 38"	4' 44"	SPECIAL 58"	6' 68"
94" length	Item Number Weight in Pounds Price	68010-PC 33	68040-PC 37	68110-PC 41	68240-PC 51	68310-PC 57
120" length	Item Number Weight in Pounds Price	68020-PC 42	68050-PC 47	68120-PC 52	68250-PC 64	68320-PC 72

PANELS

PICKET POSITION

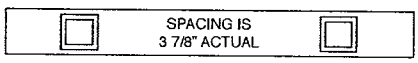

- 1" Square Top & Bottom Rail, 16 ga.
- 5/8" Square Pickets, 18 ga.
- 4" (3 7/8" actual) Spacing between Pickets
- Powder Coat Black

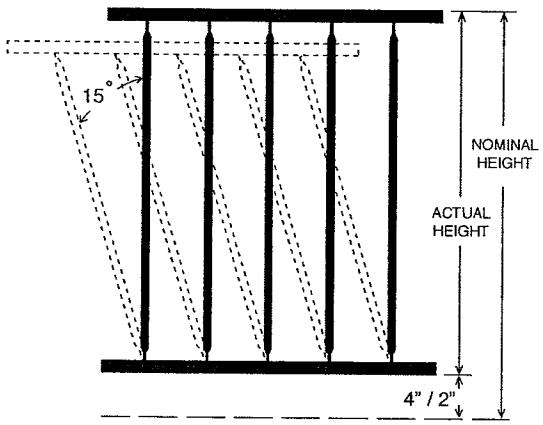

LIGHT REGAL, POWDER COAT BIASABLE

Panels

	Nominal Height Actual Height	3' 32"	3 1/2' 38"	4' 44"	SPECIAL 58"	6' 68"
94" length	Item Number Weight in Pounds Price	77010-PC 33	77041-PC 37	77110-PC 41	77240-PC 51	77310-PC 57
120" length	Item Number Weight in Pounds Price	77020-PC 42	77042-PC 47	77120-PC 52	77250-PC 64	77320-PC 72

© 2004 Builders Fence Company, Inc.

Prices Subject to change without notice

Effective: *Replaces:*

8-152 (Addendum No. 2)

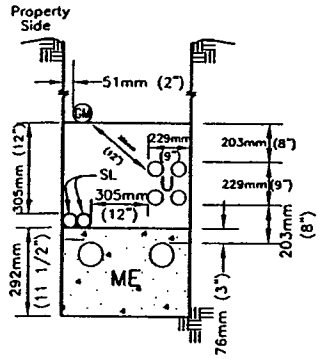

TYPE A

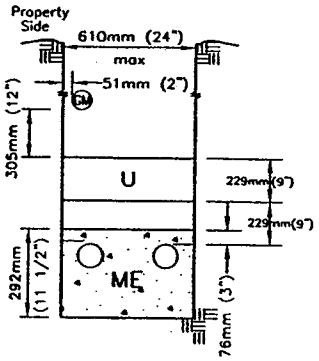

TYPE B

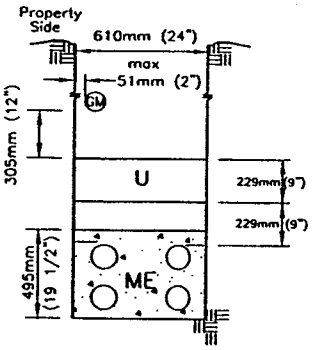

TYPE C

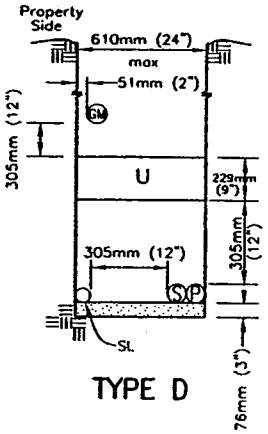

TYPE D

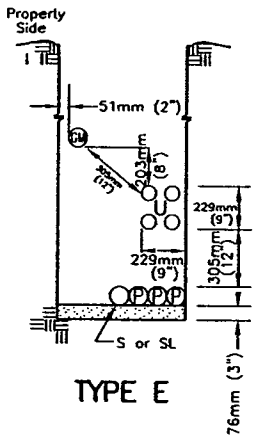

TYPE E

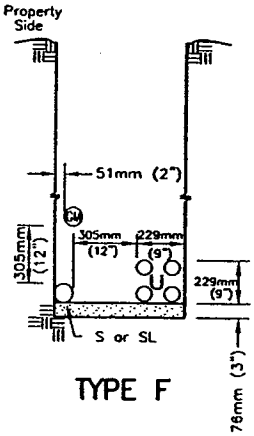

TYPE F

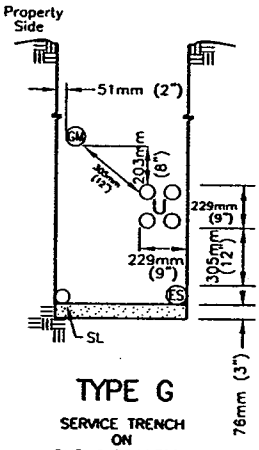

TYPE G

SERVICE TRENCH ON PUBLIC PROPERTY

	Legend	Minimum Cover
GM	Gas Main	762mm (30")
GS	Gas Service	762mm (30")
P	Primary Electric	1.1m (42")
S	Secondary Electric	762mm (30")
ES	Electric Service	762mm (30")
ME	Multiple Electric (P, S or ES in Spacers) Concrete Encased	610mm (24")
SL	Street Light (not series)	762mm (30")
U	CATV	610mm (24")
	TELCO	610mm (24")

NOTES

1. All dimensions are typical unless otherwise noted.
2. Generally utilities are to be installed under the applicable specifications for the particular utility and the specifications of the owner Agency.
3. The location of utilities as shown by the Standard Drawing shall in no way violate existing codes or regulations applicable to individual utilities.
4. Installation of sewer and/or water utilities are not permitted in the joint trenches shown above.
5. Minimum depth of gas pipe may, subject to gas company inspectors approval, be reduced to 610mm (24") where necessary to clear structure crossings.
6. Depth and width of trench varies.
7. CATV main or trunk line conduit required along all streets, except cul-de-sac streets less than 305m (1,000') in length which may be served by feeder lines only.
8. CATV 38mm (1-1/2") feeder conduit shall run across streets with each power service line and capped at edge of sidewalk.
9. All CATV terminals and conduits shall be terminated at generally accepted locations and marked. A map shall be filed with the appropriate agency showing the locations of the CATV system.
10. In no case shall CATV conduits be placed within 305mm (12") of gas lines, also conduits are not to be placed directly over gas lines.
11. Catv conduit may be placed with the TELCO conduit provided the TELCO minimum depth is held.

Revision	By	Approved	Date
ORIGINAL		Parkinson	9/88
Add Metric		T. Stanton	03/03
Reviewed		T. Stanton	04/06

SAN DIEGO REGIONAL STANDARD DRAWING

JOINT TRENCH LOCATIONS

8-34a (Addendum No. 2)

RECOMMENDED BY THE SAN DIEGO REGIONAL STANDARDS COMMITTEE

T. Stanton 3/01/2003

Chairperson R.C.E. 19246 Date

DRAWING NUMBER **M-15**

DP003DPS-REMOTE50-001
10/16/06 11:05

SAN DIEGO GAS AND ELECTRIC
DPSS - UG CONSTRUCTION ORDER FACE SHEET

Customer

WORK ORDER: 2818650 PROJECT: 436323 JOB:01 REV:0 TYPE: UD NAME: E MISSION RD 20A T&C MUNI TRENCH STATUS: ACT

LOCATION: MISSION RD BET HILL AV AND MAIN AV ADDRESS: CITY: FB THOMAS BROTHERS: 1027-E2

DISTRICT: NE ADDRESS: 571 ENTERPRISE ST ESCONDIDO 92029 PH: 760-432-5805 COST CENTER: SLO:

DESIGNED BY: MIKE VAN ZANDT PH: 760-291-1192 DATE ISSUED: 10-16-06 SIO:

JOB COORD: LINDA G DONOHUE PH: 858-636-6802 PROJECT MGR: LINDA G DONOHUE PH: 858-636-6802

APPROVED BY: [illegible] DATE: 10-17-06 10/17/06 COMBO JOB:N

WORK REQ#	RULE	OPT	BILL CODE	ORDER TYPE	QTY	BUDGET	BUDGET %	TOTAL CAPITAL	BILLABLE CAPITAL	%	DEPREC CREDIT	NET CAPITAL	TOTAL O&M	BILLABLE O&M	%	NET O&M
001		D	A	80	0	06210.6	100.0	277000	0	0.0		277000				

SCHED START DATE: 12-1-06 SCHED COMP DATE: 3-1-07 COMPLETED/APPROVED BY: _____ DATE: _____

REQUIRED ACCOUNTS

5366.00000 5367.10000

JOINT CONSTRUCTION
UG ELECT: N
GAS: N
TELCO: Y TELCO ENG: JOE STRAFACCI PHONE: (760) 489-3198
MPOE: N
CATV: Y CATV ENG: MONTE GOTT ADELPHIA PHONE: (760) 438-7741
COMMENTS: X 499

CONTRACTOR DESIGN: _____ APPLICANT DESIGN: _____

RIGHT-OF-WAY REQUIRED: Y INFO:
PERMITS REQUIRED: Y AGENCY: CTY COUNTY OF SAN DIEGO
TRAFFIC CONTROL REQ: Y PLAN NO:
COMMENTS:

EXISTING FACILITIES INSTALLED ON:

RELATED CONSTRUCTION JOBS

WO#	PROJ	JOB	REV	TYPE	NAME
2818651	436323	02	0	OD	E MISSION RD 20A- MAIN ST- CP
2818652	436323	03	0	UD	E MISSION RD 20A- MAIN ST- CABLE

PLANS / REFERENCE MAPS

TYPE	NUMBER	DESCRIPTION
EF	444-1692	ELECTRIC FACILITY MP

8-59 (ADDENDUM NO. 2)

WORK ORDER: 2818650 PROJECT: 436323 JOB:01 REV:0 TYPE: UD NAME: E MISSION RD 20A T&C MUNI TRENCH STATUS: ACT

STANDARD CONSTRUCTION NOTES

STAKED BY COUNTY'S CONTRACTOR.

UNLESS OTHERWISE NOTED, ALL TERMINATIONS OF PRIMARY CONDUIT RUNS AND SECONDARY CONDUIT RUNS OTHER THAN 2" IN ABOVE GROUND PADS WILL BE MADE WITH 36" RADIUS 90 DEGREE BENDS. TERMINATIONS OF 2" SECONDARY CONDUIT RUNS IN ABOVE GROUND PADS WILL BE MADE WITH 24" RADIUS 90 DEGREE BENDS. ALL HORIZONTAL BENDS WILL BE MADE WITH 25' RADIUS SWEEPS, UNLESS OTHERWISE NOTED. STANDARD CONDUIT BENDS TO BE USED. THE MINIMUM TERMINATION FOR ANY SERVICE CONDUIT IS A 24" RADIUS 90 DEGREE BEND.

__ UNLESS OTHERWISE NOTED, IF SERVICES ARE NOT INSTALLED WITH THE MAIN SYSTEM, INSTALL CONDUIT STUBS FROM PADS AND HANDHOLES TO P/L. ALL STUBS REQUIRE CONDUIT STUB AND BALL MARKERS PER UG STANDARD 3377. SERVICE STUBS TO BE AS SHOWN ON DRAWING.

APPLICANT NOTES

IN THE EVENT OF CONFLICT BETWEEN THIS DRAWING AND THE GENERAL CONDITIONS, THE GENERAL CONDITIONS SHALL TAKE PRECEDENCE. A COMPLETE SET OF UTILITY CONSTRUCTION SPECIFICATIONS IS AVAILABLE ON REQUEST.

CHECK CONFLICTS IN AREA PRIOR TO ANY EXCAVATION. CALL 'USA' AT 1-800-422-4133 48 HOURS IN ADVANCE OF ANY GRADING OR EXCAVATION IN THE VICINITY OF SDGE FACILITIES. IT IS NECESSARY TO OBTAIN AN EXCAVATION PERMIT FROM THE LOCAL AUTHORITY.

AFTER NOTIFICATION THAT CONSTRUCTION CAN PROCEED, PHONE NOTIFICATION 48 HOURS PRIOR TO THE START OF CONSTRUCTION MUST BE MADE TO THE CONSTRUCTION DEPARTMENT AT THE DISTRICT PHONE NUMBER INDICATED ON THE PREVIOUS PAGE.

FOR INSPECTION OF YOUR INSTALLATION AND ANY FIELD CHANGES PHONE SDGE INSPECTOR AT THE DISTRICT OPERATING CENTER.

X PRECONSTRUCTION CONFERENCE WITH DISTRICT OPERATING DEPARTMENT REQUIRED.

X TRENCH FOOTAGE - ~~APPLICANT~~ CONTRACTOR: _____ SDGE: _____

__ GAS WORK ORDER IS APPLICANT INSTALLATION. WO# _____.

SPECIFIC CONSTRUCTION NOTES

NO CONSTRUCTION NOTES FOUND

8-60 (ADDENDUM NO. 2)

WORK ORDER: 2818650 PROJECT: 436323 JOB: 01 REV: 0 TYPE: UD NAME: E MISSION RD 20A T&C MUNI TRENCH STATUS: ACT

DISTRICT: NC DESIGNED BY: MIKE VAN ZANDT PHONE: 291-1192

LOCATION	WRK F-C	MU ID	AU ID	DESCRIPTION	QTY RQD	UM	WORK RESP	MATL RESP	STANDARD PAGE
001	I-N		5"CP-B	CP BEND SCH 80 5 IN (SLURRY ENC)	2	EA	C	C	4204.3
	I-N		HAND-D	HAND DIG TO POLE OR EQUIPMENT	1	EA	C	C	
	I-N		CAP-05	CONDUIT END CAP 5 IN	2	EA	C	C	3373.2
	I-N		TRN-DT	TRENCHING/BACKFILL (DUMP TRUCK ASSIST)	720	HR	C	C	
	I-N		FLAG-U	FLAGGING	100	HR	C	C	
002	I-N		AS-2CT	ASPHALT 2 SAW CUT AND BREAK MECH	160	FT	C	C	
	I-N		BH04XH	MACH DIG TRENCH 4 FT DEEP BACKHOE	160	FT	C	C	G7453
	I-N		REM-4'	TRENCH SPOIL 4 FT DEPTH	160	FT	C	C	
	I-N		SLR-12	BACKFILL SLURRY 12 IN WIDE X 12 IN DEEP	160	FT	C	C	G7409
	I-N		AT-H12	ASPHALT TOP MANUAL 12 IN	160	FT	C	C	
	I-N		AB-M12	ASPHALT BASE MECH 12 IN	160	FT	C	C	
	I-N		LN-S/U	LANE CLOSURE URBAN STREET	1	EA	C	C	
	I-N		XING-U	TRAFFIC CONDITIONS (STREET CROSSINGS)	40	FT	C	C	
	I-N		LN/S/S	LANE CLOSURE URBAN ST (STREET REPAIR)	1	EA	C	C	
	I-N		XING/S	TRAFFIC COND. (XING LANE) STREET REPAIR	40	FT	C	C	
	I-N		2DB5SL	2-5 IN DB CONDUIT SLURRY ENCASED	120	FT	C	C	3376.1
	I-N		2-5SLS	2-5 IN DB 22.5 D 25 FT R SLURRY ENCASED	4	EA	C	C	3373.2
003	I-N		AD-P-H	ADJUST HH TO GRADE (IN PKY OR NEW CONST)	1	EA	C	C	
	I-N		C/P16H	COLD PATCH AND CLEAN-UP 3316 HH	1	EA	C	C	
	I-N		R/S16H	SPOIL FROM 3316 HH	1	EA	C	C	
	I-N		SHOR-H	SHORING PRIMARY HANDHOLES	1	EA	C	C	

8-61 (attachment no. 2)

WORK ORDER: 2818650 PROJECT: 436323 JOB: 01 REV: 0 TYPE: UD NAME: E MISSION RD 20A T&C MUNI TRENCH STATUS: ACT

DISTRICT: NC DESIGNED BY: MIKE VAN ZANDT PHONE: 291-1192

LOCATION	WRK F-C	MU ID	AU ID	DESCRIPTION	QTY RQD	UM	WORK RESP	MATL RESP	STANDARD PAGE
003	I-N		X16H-A	EXCAVATE 3316 HANDHOLE AVERAGE	1	EA	C	C	3316.4
	I-N		16H-SL	BACKFILL SLURRY 3316 HH	1	EA	C	C	
	I-N		3316TC	HANDHOLE 3316 WITH TRAFFIC COVER	1	EA	C	C	3316
	I-N		AS-1CT	ASPHALT 1 SAW CUT AND BREAK MECH	34	FT	C	C	
	I-N		AS-M24	ASPHALT BASE & TOP MECH 24 IN	34	FT	C	C	
	I-N		RED5-4	CONDUIT BELL REDUCER DB 5 IN TO 4 IN	4	EA	C	C	3373.2
	I-N		RED4-3	CONDUIT BELL REDUCER DB 4 IN TO 3 IN	3	EA	C	C	3373.2
004	I-N		AS-2CT	ASPHALT 2 SAW CUT AND BREAK MECH	20	FT	C	C	
	I-N		BH03XH	MACH DIG TRENCH 3 FT DEEP BACKHOE	20	FT	C	C	G7453
	I-N		REM-3'	TRENCH SPOIL 3 FT DEPTH	20	FT	C	C	
	I-N		SHD-12	SHADE TRENCH WITH SAND - 12 INCH WIDTH	20	FT	C	C	G7405
	I-N		DG--12	BACKFILL DG 12 IN WIDE X 12 IN DEEP	20	FT	C	C	G7409
	I-N		AT-H12	ASPHALT TOP MANUAL 12 IN	20	FT	C	C	
	I-N		AB-M12	ASPHALT BASE MECH 12 IN	20	FT	C	C	
	I-N		1DB3-S	1-3 IN DB CONDUIT SEC	20	FT	C	C	3373.1
	I-N		1DB3SB	1-3 IN DB 90 D 36 IN R BEND SEC	2	EA	C	C	3373.2
005	I-N		AS-2CT	ASPHALT 2 SAW CUT AND BREAK MECH	30	FT	C	C	
	I-N		BH04XH	MACH DIG TRENCH 4 FT DEEP BACKHOE	30	FT	C	C	G7453
	I-N		REM-4'	TRENCH SPOIL 4 FT DEPTH	30	FT	C	C	
	I-N		SLR-12	BACKFILL SLURRY 12 IN WIDE X 12 IN DEEP	10	FT	C	C	G7409
	I-N		AT-H12	ASPHALT TOP MANUAL 12 IN	30	FT	C	C	

8-23-06 Attachment No. 2

WORK ORDER: 2818650 PROJECT: 436323 JOB: 01 REV: 0 TYPE: UD NAME: E MISSION RD 20A T&C MUNI TRENCH STATUS: ACT

DISTRICT: NC DESIGNED BY: MIKE VAN ZANDT PHONE: 291-1192

LOCATION	WRK F-C	MU ID	AU ID	DESCRIPTION	QTY RQD	UM	WORK RESP	MATL RESP	STANDARD PAGE
005	I-N		AB-M12	ASPHALT BASE MECH 12 IN	30	FT	C	C	
	I-N		LN-S/U	LANE CLOSURE URBAN STREET	1	EA	C	C	
	I-N		LN/S/S	LANE CLOSURE URBAN ST (STREET REPAIR)	1	EA	C	C	
	I-N		2EB3SL	2-3 IN EB CONDUIT SLURRY ENCASED	40	FT	C	C	3376.1
	I-N		2-3SLS	2-3 IN DB 22.5 D 25 FT R SLURRY ENCASED	3	EA	C	C	3373.2
006				NO DESIGN UNITS FOUND					
007	I-N		AS-2CT	ASPHALT 2 SAW CUT AND BREAK MECH	100	FT	C	C	
	I-N		BH04XH	MACH DIG TRENCH 4 FT DEEP BACKHOE	100	FT	C	C	G7453
	I-N		REM-4'	TRENCH SPOIL 4 FT DEPTH	100	FT	C	C	
	I-N		SLR-12	BACKFILL SLURRY 12 IN WIDE X 12 IN DEEP	200	FT	C	C	G7409
	I-N		AT-H12	ASPHALT TOP MANUAL 12 IN	100	FT	C	C	
	I-N		AB-M12	ASPHALT BASE MECH 12 IN	100	FT	C	C	
	I-N		LN-S/U	LANE CLOSURE URBAN STREET	1	EA	C	C	
	I-N		LN/S/S	LANE CLOSURE URBAN ST (STREET REPAIR)	1	EA	C	C	
	I-N		1EB3SL	1-3 IN EB CONDUIT SLURRY ENCASED	70	FT	C	C	3376.1
	I-N		1-3SLS	1-3 IN DB 22.5 D 25 FT R SLURRY ENCASED	3	EA	C	C	3373.2
	I-N		SAW-CC	SAW CUT CONCRETE	10	FT	C	C	
	I-N		SW-BRK	BREAK SIDEWALK (5X5) MANUALLY	2	EA	C	C	
	I-N		CC-WLK	CONCRETE SIDEWALK SECTION (5X5) FINISHED	2	EA	C	C	
	I-N		H-BRDS	HEADER BOARDS (INCLUDES TIME TO I & R)	10	FT	C	C	
008				NO DESIGN UNITS FOUND					

863 (Addendum No. 2)

WORK ORDER: 2818650 PROJECT: 436323 JOB: 01 REV: 0 TYPE: UD NAME: E MISSION RD 20A T&C MUNI TRENCH STATUS: ACT

DISTRICT: NC DESIGNED BY: MIKE VAN ZANDT PHONE: 291-1192

LOCATION	WRK F-C	MU ID	AU ID	DESCRIPTION	QTY RQD	UM	WORK RESP	MATL RESP	STANDARD PAGE
009	I-N		HAND-D	HAND DIG TO POLE OR EQUIPMENT	1	EA	C	C	
	I-N		1-3SLB	1-3 IN DB 90 D 36 IN R BEND SLURRY ENC	1	EA	C	C	3373.2
010	I-N		AS-2CT	ASPHALT 2 SAW CUT AND BREAK MECH	300	FT	C	C	
	I-N		BH04XH	MACH DIG TRENCH 4 FT DEEP BACKHOE	300	FT	C	C	G7453
	I-N		REM-4'	TRENCH SPOIL 4 FT DEPTH	300	FT	C	C	
	I-N		SLR-24	BACKFILL SLURRY 24 IN WIDE X 12 IN DEEP	600	FT	C	C	G7409
	I-N		AT-H18	ASPHALT TOP MANUAL 18 IN	300	FT	C	C	
	I-N		AB-M18	ASPHALT BASE MECH 18 IN	100	FT	C	C	
	I-N		LN-S/U	LANE CLOSURE URBAN STREET	2	EA	C	C	
	I-N		XING-U	TRAFFIC CONDITIONS (STREET CROSSINGS)	60	FT	C	C	
	I-N		LN/S/S	LANE CLOSURE URBAN ST (STREET REPAIR)	2	EA	C	C	
	I-N		XING/S	TRAFFIC COND. (XING LANE) STREET REPAIR	60	FT	C	C	
	I-N		2DB5SL	2-5 IN DB CONDUIT SLURRY ENCASED	300	FT	C	C	3376.1
	I-N		1EB4SL	1-4 IN EB CONDUIT SLURRY ENCASED	300	FT	C	C	3376.1
011	I-N		AS-2CT	ASPHALT 2 SAW CUT AND BREAK MECH	40	FT	C	C	
	I-N		BH03XH	MACH DIG TRENCH 3 FT DEEP BACKHOE	70	FT	C	C	G7453
	I-N		REM-3'	TRENCH SPOIL 3 FT DEPTH	70	FT	C	C	
	I-N		SLR-12	BACKFILL SLURRY 12 IN WIDE X 12 IN DEEP	140	FT	C	C	G7409
	I-N		AT-H12	ASPHALT TOP MANUAL 12 IN	40	FT	C	C	
	I-N		AB-M12	ASPHALT BASE MECH 12 IN	40	FT	C	C	
	I-N		LN-S/U	LANE CLOSURE URBAN STREET	2	EA	C	C	

864 (ADDENDUM NO. 2)

WORK ORDER: 2818650 PROJECT: 436323 JOB: 01 REV: 0 TYPE: UD NAME: E MISSION RD 20A T&C MUNI TRENCH STATUS: ACT

DISTRICT: NC DESIGNED BY: MIKE VAN ZANDT PHONE: 291-1192

LOCATION	WRK F-C	MU ID	AU ID	DESCRIPTION	QTY RQD	UM	WORK RESP	MATL RESP	STANDARD PAGE
011	I-N		XING-U	TRAFFIC CONDITIONS (STREET CROSSINGS)	40	FT	C	C	
	I-N		LN/S/S	LANE CLOSURE URBAN ST (STREET REPAIR)	2	EA	C	C	
	I-N		XING/S	TRAFFIC COND. (XING LANE) STREET REPAIR	40	FT	C	C	
	I-N		PLANTU	REMOVE/REPLACE LANDSCAPING	5	FT	C	C	
	I-N		SAW-CC	SAW CUT CONCRETE	20	FT	C	C	
	I-N		SW-BRK	BREAK SIDEWALK (5X5) MANUALLY	3	EA	C	C	
	I-N		CC-WLK	CONCRETE SIDEWALK SECTION (5X5) FINISHED	3	EA	C	C	
	I-N		1EB2SL	1-2 IN DB CONDUIT SLURRY ENCASED	70	FT	C	C	3376.1
	I-N		1-2SLB	1-2 IN DB 90 D 36 IN R BEND SLURRY ENC	1	EA	C	C	3373.2
	I-N		2EB2SL	2-2 IN EB CONDUIT SLURRY ENCASED	68	FT	C	C	3376.1
	I-N		2-2SLB	2-2 IN DB 90 D 36 IN R BEND SLURRY ENC	1	EA	C	C	3373.2
012	I-N		HAND-D	HAND DIG TO POLE OR EQUIPMENT	2	EA	C	C	
	I-N		1-2SLB	1-2 IN DB 90 D 36 IN R BEND SLURRY ENC	4	EA	C	C	3373.2
	I-N		1-3SLB	1-3 IN DB 90 D 36 IN R BEND SLURRY ENC	1	EA	C	C	3373.2
	I-N		SAW-CC	SAW CUT CONCRETE	10	FT	C	C	
	I-N		SW-BRK	BREAK SIDEWALK (5X5) MANUALLY	1	EA	C	C	
	I-N		CC-WLK	CONCRETE SIDEWALK SECTION (5X5) FINISHED	1	EA	C	C	
013	I-N		SAW-CC	SAW CUT CONCRETE	10	FT	C	C	
	I-N		SW-BRK	BREAK SIDEWALK (5X5) MANUALLY	2	EA	C	C	
	I-N		CC-WLK	CONCRETE SIDEWALK SECTION (5X5) FINISHED	2	EA	C	C	
	I-N		H-BRDS	HEADER BOARDS (INCLUDES TIME TO I & R)	10	FT	C	C	

8-65 (Addendum No. 2)

WORK ORDER: 2818650 PROJECT: 436323 JOB: 01 REV: 0 TYPE: UD NAME: E MISSION RD 20A T&C MUNI TRENCH STATUS: ACT

DISTRICT: NC DESIGNED BY: MIKE VAN ZANDT PHONE: 291-1192

LOCATION	WRK F-C	MU ID	AU ID	DESCRIPTION	QTY RQD	UM	WORK RESP	MATL RESP	STANDARD PAGE
013	I-N		3'HD-H	HAND DIG TRENCH 3 FT DEEP HARD	30	FT	C	C	G7453
	I-N		REM-3'	TRENCH SPOIL 3 FT DEPTH	30	FT	C	C	
	I-N		SHD-12	SHADE TRENCH WITH SAND - 12 INCH WIDTH	30	FT	C	C	G7405
	I-N		DG--12	BACKFILL DG 12 IN WIDE X 12 IN DEEP	60	FT	C	C	G7409
	I-N		PLANTU	REMOVE/REPLACE LANDSCAPING	10	FT	C	C	
	I-N		1DB2SB	1-2 IN DB 90 D 24 IN R BEND SEC	30	EA	C	C	3373.2
	I-N		1DB2-S	1-2 IN DB CONDUIT SEC	2	FT	C	C	3373.1
014				NO DESIGN UNITS FOUND					
015				NO DESIGN UNITS FOUND					
016	I-N		1EB3SL	1-3 IN EB CONDUIT SLURRY ENCASED	140	FT	C	C	3376.1
	I-N		1-3SLS	1-3 IN DB 22.5 D 25 FT R SLURRY ENCASED	2	EA	C	C	3373.2
	I-N		3'HD-H	HAND DIG TRENCH 3 FT DEEP HARD	5	FT	C	C	G7453
	I-N		REM-3'	TRENCH SPOIL 3 FT DEPTH	5	FT	C	C	
	I-N		SLR-12	BACKFILL SLURRY 12 IN WIDE X 12 IN DEEP	15	FT	C	C	G7409
017				NO DESIGN UNITS FOUND					
018	I-N		3421-1	PAD 3421 1-PHASE TRANSFORMER	1	EA	C	C	3421.1
	I-N		X-XF1P	PAD PREP 3421 PAD (1-PHASE TRANSFORMER)	1	EA	C	C	
	I-N		1-3SLB	1-3 IN DB 90 D 36 IN R BEND SLURRY ENC	3	EA	C	C	3373.2
	I-N		PLANTU	REMOVE/REPLACE LANDSCAPING	5	FT	C	C	
	I-N		TG-E-W	TRENCH GRD WIRE W/O RODS (EQUIP/SWI/HH)	1	EA	C	C	4510.1
019	I-N		BH03XH	MACH DIG TRENCH 3 FT DEEP BACKHOE	14	FT	C	C	G7453

8-66 (Addendum No. 2)

WORK ORDER: 2818650 PROJECT: 436323 JOB: 01 REV: 0 TYPE: UD NAME: E MISSION RD 20A T&C MUNI TRENCH STATUS: ACT

DISTRICT: NC DESIGNED BY: MIKE VAN ZANDT PHONE: 291-1192

LOCATION	WRK F-C	MU ID	AU ID	DESCRIPTION	QTY RQD	UM	WORK RESP	MATL RESP	STANDARD PAGE
019	I-N		REM-3'	TRENCH SPOIL 3 FT DEPTH	14	FT	C	C	
	I-N		SLR-12	BACKFILL SLURRY 12 IN WIDE X 12 IN DEEP	28	FT	C	C	G7409
	I-N		1EB3SL	1-3 IN EB CONDUIT SLURRY ENCASED	55	FT	C	C	3376.1
	I-N		1-3SLS	1-3 IN DB 22.5 D 25 FT R SLURRY ENCASED	2	EA	C	C	3373.2
020	I-N		3"CP-B	CP BEND SCH 80 3 IN	1	EA	C	C	4204.3
	I-N		HAND-D	HAND DIG TO POLE OR EQUIPMENT	1	EA	C	C	
	I-N		CAP-03	CONDUIT END CAP 3 IN	1	EA	C	C	3373.2
021	I-N		AS-2CT	ASPHALT 2 SAW CUT AND BREAK MECH	20	FT	C	C	
	I-N		BH03XH	MACH DIG TRENCH 3 FT DEEP BACKHOE	40	FT	C	C	G7453
	I-N		REM-3'	TRENCH SPOIL 3 FT DEPTH	40	FT	C	C	
	I-N		SLR-12	BACKFILL SLURRY 12 IN WIDE X 12 IN DEEP	80	FT	C	C	G7409
	I-N		AT-H12	ASPHALT TOP MANUAL 12 IN	20	FT	C	C	
	I-N		AB-M12	ASPHALT BASE MECH 12 IN	20	FT	C	C	
	I-N		LN-S/U	LANE CLOSURE URBAN STREET	8	EA	C	C	
	I-N		LN/S/S	LANE CLOSURE URBAN ST (STREET REPAIR)	1	EA	C	C	
	I-N		SAW-CC	SAW CUT CONCRETE	10	FT	C	C	
	I-N		SW-BRK	BREAK SIDEWALK (5X5) MANUALLY	1	EA	C	C	
	I-N		CC-WLK	CONCRETE SIDEWALK SECTION (5X5) FINISHED	1	EA	C	C	
	I-N		H-BRDS	HEADER BOARDS (INCLUDES TIME TO I & R)	5	FT	C	C	
	I-N		PLANTU	REMOVE/REPLACE LANDSCAPING	5	FT	C	C	
	I-N		1EB3SL	1-3 IN EB CONDUIT SLURRY ENCASED	70	FT	C	C	3376.1

8-67 (ADDENDUM NO. 2)

WORK ORDER: 2818650 PROJECT: 436323 JOB: 01 REV: 0 TYPE: UD NAME: E MISSION RD 20A T&C MUNI TRENCH STATUS: ACT

DISTRICT: NC DESIGNED BY: MIKE VAN ZANDT PHONE: 291-1192

LOCATION	WRK F-C	MU ID	AU ID	DESCRIPTION	QTY RQD	UM	WORK RESP	MATL RESP	STANDARD PAGE
021	I-N		1-3SLS	1-3 IN DB 22.5 D 25 FT R SLURRY ENCASED	3	EA	C	C	3373.2
	I-N		HAND-D	HAND DIG TO POLE OR EQUIPMENT	1	EA	C	C	
022	I-N		3'HD-H	HAND DIG TRENCH 3 FT DEEP HARD	5	FT	C	C	G7453
	I-N		REM-3'	TRENCH SPOIL 3 FT DEPTH	5	FT	C	C	
	I-N		SLR-12	BACKFILL SLURRY 12 IN WIDE X 12 IN DEEP	15	FT	C	C	G7409
	I-N		2EB3SL	2-3 IN EB CONDUIT SLURRY ENCASED	10	FT	C	C	3376.1
	I-N		2-3SLB	2-3 IN DB 90 D 36 IN R BEND SLURRY ENC	1	EA	C	C	3373.2
023				NO DESIGN UNITS FOUND					
024	I-N		AD-P-H	ADJUST HH TO GRADE (IN PKY OR NEW CONST)	1	EA	C	C	
	I-N		C/P16H	COLD PATCH AND CLEAN-UP 3316 HH	1	EA	C	C	
	I-N		R/S16H	SPOIL FROM 3316 HH	1	EA	C	C	
	I-N		SHOR-H	SHORING PRIMARY HANDHOLES	1	EA	C	C	
	I-N		X16H-A	EXCAVATE 3316 HANDHOLE AVERAGE	1	EA	C	C	3316.4
	I-N		16H-SL	BACKFILL SLURRY 3316 HH	1	EA	C	C	
	I-N		3316TC	HANDHOLE 3316 WITH TRAFFIC COVER	1	EA	C	C	3316
	I-N		AS-1CT	ASPHALT 1 SAW CUT AND BREAK MECH	34	FT	C	C	
	I-N		AS-M24	ASPHALT BASE & TOP MECH 24 IN	34	FT	C	C	
	I-N		RED5-4	CONDUIT BELL REDUCER DB 5 IN TO 4 IN	7	EA	C	C	3373.2
	I-N		RED4-3	CONDUIT BELL REDUCER DB 4 IN TO 3 IN	6	EA	C	C	3373.2
025	I-N		1-3SLB	1-3 IN DB 90 D 36 IN R BEND SLURRY ENC	1	EA	C	C	3373.2
026	I-N		AS-2CT	ASPHALT 2 SAW CUT AND BREAK MECH	200	FT	C	C	

8-68 (ADDENDUM NO. 2)

WORK ORDER: 2818650 PROJECT: 436323 JOB: 01 REV: 0 TYPE: UD NAME: E MISSION RD 20A T&C MUNI TRENCH STATUS: ACT

DISTRICT: NC DESIGNED BY: MIKE VAN ZANDT PHONE: 291-1192

LOCATION	WRK F-C	MU ID	AU ID	DESCRIPTION	QTY RQD	UM	WORK RESP	MATL RESP	STANDARD PAGE
026	I-N		BH03XH	MACH DIG TRENCH 3 FT DEEP BACKHOE	200	FT	C	C	G7453
	I-N		REM-3'	TRENCH SPOIL 3 FT DEPTH	200	FT	C	C	
	I-N		TRN-DT	TRENCHING/BACKFILL (DUMP TRUCK ASSIST)	40	HR	C	C	
	I-N		SLR-12	BACKFILL SLURRY 12 IN WIDE X 12 IN DEEP	200	FT	C	C	G7409
	I-N		AT-H12	ASPHALT TOP MANUAL 12 IN	200	FT	C	C	
	I-N		AB-M12	ASPHALT BASE MECH 12 IN	200	FT	C	C	
	I-N		LN-S/U	LANE CLOSURE URBAN STREET	2	EA	C	C	
	I-N		XING-U	TRAFFIC CONDITIONS (STREET CROSSINGS)	60	FT	C	C	
	I-N		LN/S/S	LANE CLOSURE URBAN ST (STREET REPAIR)	2	EA	C	C	
	I-N		XING/S	TRAFFIC COND. (XING LANE) STREET REPAIR	60	FT	C	C	
	I-N		2DB5SL	2-5 IN DB CONDUIT SLURRY ENCASED	150	FT	C	C	3376.1
	I-N		2-5SLS	2-5 IN DB 22.5 D 25 FT R SLURRY ENCASED	5	EA	C	C	3373.2
027	I-N		5"CP-B	CP BEND SCH 80 5 IN (SLURRY ENC)	2	EA	C	C	4204.3
	I-N		CAP-05	CONDUIT END CAP 5 IN	2	EA	C	C	3373.2
	I-N		HAND-D	HAND DIG TO POLE OR EQUIPMENT	1	EA	C	C	
028	I-N		3421-1	PAD 3421 1-PHASE TRANSFORMER	1	EA	C	C	3421.1
	I-N		X-XF1P	PAD PREP 3421 PAD (1-PHASE TRANSFORMER)	1	EA	C	C	
	I-N		1-3SLB	1-3 IN DB 90 D 36 IN R BEND SLURRY ENC	3	EA	C	C	3373.2
	I-N		1-2SLB	1-2 IN DB 90 D 36 IN R BEND SLURRY ENC	2	EA	C	C	3373.2
	I-N		TG-E-W	TRENCH GRD WIRE W/O RODS (EQUIP/SWI/HH)	1	EA	C	C	4510.1
029	I-N		AS-2CT	ASPHALT 2 SAW CUT AND BREAK MECH	10	FT	C	C	

8-69 (ADDENDUM NO. 2)

WORK ORDER: 2818650 PROJECT: 436323 JOB: 01 REV: 0 TYPE: UD NAME: E MISSION RD 20A T&C MUNI TRENCH STATUS: ACT

DISTRICT: NC DESIGNED BY: MIKE VAN ZANDT PHONE: 291-1192

LOCATION	WRK F-C	MU ID	AU ID	DESCRIPTION	QTY RQD	UM	WORK RESP	MATL RESP	STANDARD PAGE
029	I-N		3'HD-H	HAND DIG TRENCH 3 FT DEEP HARD	10	FT	C	C	G7453
	I-N		REM-3'	TRENCH SPOIL 3 FT DEPTH	10	FT	C	C	
	I-N		SHD-12	SHADE TRENCH WITH SAND - 12 INCH WIDTH	10	FT	C	C	G7405
	I-N		DG--12	BACKFILL DG 12 IN WIDE X 12 IN DEEP	20	FT	C	C	G7409
	I-N		1DB2-S	1-2 IN DB CONDUIT SEC	10	FT	C	C	3373.1
	I-N		1DB2SB	1-2 IN DB 90 D 24 IN R BEND SEC	1	EA	C	C	3373.2
	I-N		AS-H12	ASPHALT BASE & TOP MANUAL 12 IN	10	FT	C	C	
030	I-N		AS-2CT	ASPHALT 2 SAW CUT AND BREAK MECH	32	FT	C	C	
	I-N		3'HD-H	HAND DIG TRENCH 3 FT DEEP HARD	32	FT	C	C	G7453
	I-N		REM-3'	TRENCH SPOIL 3 FT DEPTH	32	FT	C	C	
	I-N		SHD-12	SHADE TRENCH WITH SAND - 12 INCH WIDTH	32	FT	C	C	G7405
	I-N		DG--12	BACKFILL DG 12 IN WIDE X 12 IN DEEP	64	FT	C	C	G7409
	I-N		1DB2-S	1-2 IN DB CONDUIT SEC	32	FT	C	C	3373.1
	I-N		AS-H12	ASPHALT BASE & TOP MANUAL 12 IN	32	FT	C	C	
031	I-N		BH03XH	MACH DIG TRENCH 3 FT DEEP BACKHOE	55	FT	C	C	G7453
	I-N		REM-3'	TRENCH SPOIL 3 FT DEPTH	55	FT	C	C	
	I-N		SLR-12	BACKFILL SLURRY 12 IN WIDE X 12 IN DEEP	110	FT	C	C	G7409
	I-N		2EB2SL	2-2 IN EB CONDUIT SLURRY ENCASED	55	FT	C	C	3376.1
	I-N		CAP-02	CONDUIT END CAP 2 IN	2	EA	C	C	3373.2
	I-N		STUB/M	STUB MARKER FOR UNDERGROUND CONDUIT	1	EA	C	C	3377.1
032	I-N		AS-2CT	ASPHALT 2 SAW CUT AND BREAK MECH	60	FT	C	C	

8-70 (ADDENDUM NO. 2)

WORK ORDER: 2818650 PROJECT: 436323 JOB: 01 REV: 0 TYPE: UD NAME: E MISSION RD 20A T&C MUNI TRENCH STATUS: ACT

DISTRICT: NC DESIGNED BY: MIKE VAN ZANDT PHONE: 291-1192

LOCATION	WRK F-C	MU ID	AU ID	DESCRIPTION	QTY RQD	UM	WORK RESP	MATL RESP	STANDARD PAGE
032	I-N		BH03XH	MACH DIG TRENCH 3 FT DEEP BACKHOE	60	FT	C	C	G7453
	I-N		REM-3'	TRENCH SPOIL 3 FT DEPTH	60	FT	C	C	
	I-N		SLR-18	BACKFILL SLURRY 18 IN WIDE X 12 IN DEEP	120	FT	C	C	G7409
	I-N		AT-M18	ASPHALT TOP MECH 18 IN	60	FT	C	C	
	I-N		AB-M18	ASPHALT BASE MECH 18 IN	60	FT	C	C	
	I-N		SAW-CC	SAW CUT CONCRETE	15	FT	C	C	
	I-N		SW-BRK	BREAK SIDEWALK (5X5) MANUALLY	3	EA	C	C	
	I-N		CC-WLK	CONCRETE SIDEWALK SECTION (5X5) FINISHED	3	EA	C	C	
	I-N		2EB3SL	2-3 IN EB CONDUIT SLURRY ENCASED	55	FT	C	C	3376.1
	I-N		2-3SLS	2-3 IN DB 22.5 D 25 FT R SLURRY ENCASED	1	EA	C	C	3373.2
	I-N		2-3SLB	2-3 IN DB 90 D 36 IN R BEND SLURRY ENC	1	EA	C	C	3373.2
	I-N		LN-S/U	LANE CLOSURE URBAN STREET	1	EA	C	C	
	I-N		LN/S/S	LANE CLOSURE URBAN ST (STREET REPAIR)	1	EA	C	C	
	I-N		XING-U	TRAFFIC CONDITIONS (STREET CROSSINGS)	60	FT	C	C	
	I-N		XING/S	TRAFFIC COND. (XING LANE) STREET REPAIR	60	FT	C	C	
033	I-N		FC3PAD	PAD 3421 W/HH 3-PHASE FUSE CABINET	1	EA	C	C	3421.1
	I-N		XFC-3P	EXCAVATE 3421 PAD W/HH (3-PHASE F.C.)	1	EA	C	C	3421.2
	I-N		1-3SLB	1-3 IN DB 90 D 36 IN R BEND SLURRY ENC	2	EA	C	C	3373.2
	I-N		PLANTU	REMOVE/REPLACE LANDSCAPING	5	FT	C	C	
	I-N		LN-S/U	LANE CLOSURE URBAN STREET	1	EA	C	C	
	I-N		TG-E-W	TRENCH GRD WIRE W/O RODS (EQUIP/SWI/HH)	1	EA	C	C	4510.1

8-71 (Addendum No. 2)

WORK ORDER: 2818650 PROJECT: 436323 JOB: 01 REV: 0 TYPE: UD NAME: E MISSION RD 20A T&C MUNI TRENCH STATUS: ACT

DISTRICT: NE ADDRESS: 571 ENTERPRISE ST ESCONDIDO 92029 PHONE: 432-5805 COST CENTER:

DESIGNED BY: MIKE VAN ZANDT PHONE: 291-1192 LOCATIONS: THROUGH:

MATERIAL TO BE PROVIDED BY CUSTOMER AND INSTALLED BY CUSTOMER SHEET: 1

STOCK NUMBER	DESCRIPTION	ACCT STAT	ACCOUNT	QUANTITY REQUIRED	UM	ISSUED	CREDIT
162426	HANDHOLE BODY 17 IN X 30 IN X 12 IN 3312	NE	366.00000	1	EA		
203296	CONDUIT END CAP 2 IN	NE	366.00000	2	EA		
203328	CONDUIT END CAP 3 IN	NE	366.00000	1	EA		
203392	CONDUIT END CAP 5 IN	NE	366.00000	4	EA		
249632	CONDUIT DB 2 IN 20 FT LENGTH	NE	366.00000	360	FT		
249664	CONDUIT DB 3 IN 20 FT LENGTH	NE	366.00000	565	FT		
249710	CONDUIT DB 100 4 IN 20 FT LENGTH	NE	366.00000	300	FT		
249728	CONDUIT DB 5 IN 20 FT LENGTH	NE	366.00000	1140	FT		
321812	BEND CONDUIT DB 2 IN 90 D 36 IN R	NE	366.00000	9	EA		
321856	BEND CONDUIT DB 5 IN 22.5 D 25 FT R	NE	366.00000	18	EA		
321984	BEND CONDUIT DB 2 IN 90 D 24 IN R	NE	366.00000	31	EA		
322048	BEND CONDUIT DB 3 IN 90 D 36 IN R	NE	366.00000	17	EA		
322144	BEND CONDUIT DB 3 IN 22.5 D 25 FT R	NE	366.00000	18	EA		
322472	ELBOW 3 IN-36 IN R 90 D PVC SCH 80	NE	366.00000	1	EA		
322488	ELBOW 5 IN-48 IN R 90 D PVC SCH 80	NE	366.00000	4	EA		
400312	3316 TRAFFIC COVER HANDHOLE COMPLETE	NE	366.00000	2	EA		
476302	MARKER CONDUIT STUB RED	NE	366.00000	1	EA		
476494	MARKER, BALL, E.F.M.S	NE	366.00000	1	EA		
514240	PAD 1-PHASE XFMR / 3-PHASE F.C. 3421	NE	366.00000	3	EA		
573380	CONDUIT BELL REDUCER 4 IN TO 3 IN	NE	366.00000	9	EA		
573384	CONDUIT BELL REDUCER 5 IN TO 4 IN	NE	366.00000	11	EA		
812816	WIRE BARE COPPER #2-7 STR SOFT DRAWN	NE	367.10000	24	LB		
809200	WIRE TRACER 14AWG 600V CU SOLID INSULATE	ET	EXEMPT	6	FT		
X20022	GRIND ASPHALT (PER SF)	DC	366.00000	278	SF		
X20201	TRAFFIC BEARING STEEL PLATE	DC	366.00000	936	EA		
X30007	DUMPING FEE	DC	366.00000	403	CY		
X30010	SHORING MATERIAL	DC	366.00000	78	EA		
114200	ASPHALT (COLD PATCH)	DC	366.00000	4	TN		
114201	ASPHALT (BASE)	DC	366.00000	75	TN		
114202	ASPHALT (TOP)	DC	366.00000	26	TN		
114215	ASPHALT, COLD MIX	DC	366.00000	20	TN		
248200	CONCRETE - 1 SACK (SAND MIX)	DC	366.00000	14	CY		
248205	CONCRETE - 6 SACK (3/4" ROCK MIX)	DC	366.00000	10	CY		
388702	DECOMP GRANITE RECYCLE MEETING GRN BOOK	DC	366.00000	12	TN		
601600	ROCK, DRY, 3/8" RECYCLED MATLS PREFFERED	DC	366.00000	4	TN		

8-72 (ADDENDUM NO. 2)

WORK ORDER: 2818650 PROJECT: 436323 JOB: 01 REV: 0 TYPE: UD NAME: E MISSION RD 20A T&C MUNI TRENCH STATUS: ACT

DISTRICT: NE ADDRESS: 571 ENTERPRISE ST ESCONDIDO 92029 PHONE: 432-5805 COST CENTER:

DESIGNED BY: MIKE VAN ZANDT PHONE: 291-1192 LOCATIONS: THROUGH:

MATERIAL TO BE PROVIDED BY CUSTOMER AND INSTALLED BY CUSTOMER SHEET: 2

STOCK NUMBER	DESCRIPTION	ACCT STAT	ACCOUNT	QUANTITY REQUIRED	UM	ISSUED	CREDIT
611492	SAND, FILL RECYCLED MATLS PREFFERED	DC	366.00000	7	TN		
656400	SLURRY MIX, 1 SACK SAND	DC	366.00000	166	CY		

8-73 (Addendum No. 2)

SAN DIEGO GAS AND ELECTRIC
DPSS - CONSTRUCTION ORDER - CUSTOMER COPY

WORK ORDER: 2818650 PROJECT: 436323 JOB:01 REV:0 TYPE: UD NAME: E MISSION RD 20A T&C MUNI TRENCH STATUS: ACT

LOCATION:MISSION RD BET HILL AV AND MAIN AV ADDRESS: CITY: FB THOMAS BROTHERS: 1027-E2

DISTRICT: NE ADDRESS: 571 ENTERPRISE ST ESCONDIDO 92029 PHONE: 432-5805 COST CENTER:

DESIGNED BY: MIKE VAN ZANDT PHONE: 291-1192 DATE ISSUED: _____

JOB COORD: LINDA G DONOHUE PHONE: 636-6802 PROJECT MGR: LINDA G DONOHUE PHONE: 636-6802

ONE-WAY TRAVEL HOURS: 0.3 YARD TIME: 1.2 TRAVEL YARD FACTOR: 0.2903

NO CREW REQUIREMENTS FOUND

8-74 (Addendum No. 2)

SAN DIEGO GAS AND ELECTRIC
DPSS - CONSTRUCTION ORDER - CUSTOMER COPY

WORK ORDER: 2818650 PROJECT: 436323 JOB:01 REV:0 TYPE: UD NAME: E MISSION RD 20A T&C MUNI TRENCH STATUS: ACT

LOCATION: 001 SHEET: 01 DISTRICT: NE DESIGNED BY: MIKE VAN ZANDT PHONE: 291-1192 LOCATION 001 OF 033

WRK F-C-T	MU ID	AU ID	STOCK#	DESCRIPTION/CONSTRUCTION NOTES	QTY RQD	UM	ACT QTY	WRK RSP	MAT RSP	ACCOUNT	STNDRD PAGE	INST/APP BY	DATE
I-N-S		5"CP-B		CP BEND SCH 80 5 IN (SLURRY ENC)	2	EA		C		366.00000	4204.3		
			322488	ELBOW 5 IN-48 IN R 90 D PVC SCH 80	2	EA			C				
			656400	SLURRY MIX, 1 SACK SAND	1	CY			C				
I-N-S		HAND-D		HAND DIG TO POLE OR EQUIPMENT	1	EA		C		366.00000			
I-N-S		CAP-05		CONDUIT END CAP 5 IN	2	EA		C		366.00000	3373.2		
			203392	CONDUIT END CAP 5 IN	2	EA			C				
I-N-S		TRN-DT		TRENCHING/BACKFILL (DUMP TRUCK ASSIST)	720	HR		C		366.00000			
I-N-S		FLAG-U		FLAGGING	100	HR		C		366.00000			

WORK FUNC	FAC CODE	DESC	EXIST TAG	NEW TAG
			P193060	

CONSTRUCTION NOTES

NO LOCATION CONSTRUCTION NOTES FOUND

8-75 (A006400M No. 2)

LOC 001 SHEET 01 |_| COMPLETED |_| PARTIALLY COMPLETED |_| ENERGIZED

AS-BUILT RECORDED BY: _____ DATE: _____ MATERIAL CHECK BY: _____ DATE: _____

SAN DIEGO GAS AND ELECTRIC
DPSS - CONSTRUCTION ORDER - CUSTOMER COPY

WORK ORDER: 2818650 PROJECT: 436323 JOB:01 REV:0 TYPE: UD NAME: E MISSION RD 20A T&C MUNI TRENCH STATUS: ACT

LOCATION: 002 SHEET: 01 DISTRICT: NE DESIGNED BY: MIKE VAN ZANDT PHONE: 291-1192 LOCATION 002 OF 033

WRK F-C-T	MU ID	AU ID	STOCK#	DESCRIPTION/CONSTRUCTION NOTES	QTY RQD	UM	ACT QTY	WRK RSP	MAT RSP	ACCOUNT	STNDRD PAGE	INST/APP BY	DATE
I-N-S		AS-2CT		ASPHALT 2 SAW CUT AND BREAK MECH	160	FT		C		366.00000			
I-N-S		BH04XH		MACH DIG TRENCH 4 FT DEEP BACKHOE	160	FT		C		366.00000	G7453		
			X20201	TRAFFIC BEARING STEEL PLATE	160	EA			C				
			114215	ASPHALT, COLD MIX	2	TN			C				
I-N-S		REM-4'		TRENCH SPOIL 4 FT DEPTH	160	FT		C		366.00000			
			X30007	DUMPING FEE	55	CY			C				
I-N-S		SLR-12		BACKFILL SLURRY 12 IN WIDE X 12 IN DEEP	160	FT		C		366.00000	G7409		
			656400	SLURRY MIX, 1 SACK SAND	6	CY			C				
I-N-S		AT-H12		ASPHALT TOP MANUAL 12 IN	160	FT		C		366.00000			
			114202	ASPHALT (TOP)	3	TN			C				
I-N-S		AB-M12		ASPHALT BASE MECH 12 IN	160	FT		C		366.00000			
			114201	ASPHALT (BASE)	12	TN			C				
I-N-S		LN-S/U		LANE CLOSURE URBAN STREET	1	EA		C		366.00000			
I-N-S		XING-U		TRAFFIC CONDITIONS (STREET CROSSINGS)	40	FT		C		366.00000			
			114215	ASPHALT, COLD MIX	1	TN			C				
I-N-S		LN/S/S		LANE CLOSURE URBAN ST (STREET REPAIR)	1	EA		C		366.00000			
I-N-S		XING/S		TRAFFIC COND. (XING LANE) STREET REPAIR	40	FT		C		366.00000			
I-N-S		2DB5SL		2-5 IN DB CONDUIT SLURRY ENCASED	120	FT		C		366.00000	3376.1		
			249728	CONDUIT DB 5 IN 20 FT LENGTH	240	FT			C				
			656400	SLURRY MIX, 1 SACK SAND	4	CY			C				
I-N-S		2-5SLS		2-5 IN DB 22.5 D 25 FT R SLURRY ENCASED	4	EA		C		366.00000	3373.2		
			321856	BEND CONDUIT DB 5 IN 22.5 D 25 FT R	8	EA			C				
			656400	SLURRY MIX, 1 SACK SAND	2	CY			C				

WORK FUNC	FAC CODE	DESC	EXIST TAG	NEW TAG

CONSTRUCTION NOTES

EXIST. ASPHALT STREET, SLURRY BACKFILL, WITH ASPHALT BASE AND TOP

LOC 002 SHEET 01 |_| COMPLETED |_| PARTIALLY COMPLETED |_| ENERGIZED

AS-BUILT RECORDED BY: _____ DATE: _____ MATERIAL CHECK BY: _____ DATE: _____

8-76 (ADDENDUM NO. 2)

WORK ORDER: 2818650 PROJECT: 436323 JOB:01 REV:0 TYPE: UD NAME: E MISSION RD 20A T&C MUNI TRENCH STATUS: ACT

LOCATION: 003 SHEET: 01 DISTRICT: NE DESIGNED BY: MIKE VAN ZANDT PHONE: 291-1192 LOCATION 003 OF 033

WRK F-C-T	MU ID	AU ID	STOCK#	DESCRIPTION/CONSTRUCTION NOTES	QTY RQD	UM	ACT QTY	WRK RSP	MAT RSP	ACCOUNT	STNDRD PAGE	INST/APP BY	DATE
I-N-S	(EXPL)			3316 TC SLURRY BACKFILL INSTALL COMPLETE	1	EA		C			3316.3		
		AD-P-H		ADJUST HH TO GRADE (IN PKY OR NEW CONST)	1	EA				366.00000			
			248205	CONCRETE - 6 SACK (3/4" ROCK MIX)	1	CY			C				
		C/P16H		COLD PATCH AND CLEAN-UP 3316 HH	1	EA				366.00000			
			114200	ASPHALT (COLD PATCH)	2	TN			C				
		R/S16H		SPOIL FROM 3316 HH	1	EA				366.00000			
			X30007	DUMPING FEE	31	CY			C				
		SHOR-H		SHORING PRIMARY HANDHOLES	1	EA				366.00000			
			X30010	SHORING MATERIAL	39	EA			C				
		X16H-A		EXCAVATE 3316 HANDHOLE AVERAGE	1	EA				366.00000	3316.4		
			601600	ROCK, DRY, 3/8" RECYCLED MATLS PREFFERED	2	TN			C				
		16H-SL		BACKFILL SLURRY 3316 HH	1	EA				366.00000			
			248200	CONCRETE - 1 SACK (SAND MIX)	7	CY			C				
		3316TC		HANDHOLE 3316 WITH TRAFFIC COVER	1	EA				366.00000	3316		
			400312	3316 TRAFFIC COVER HANDHOLE COMPLETE	1	EA			C				
I-N-S		AS-1CT		ASPHALT 1 SAW CUT AND BREAK MECH	34	FT		C		366.00000			
I-N-S		AS-M24		ASPHALT BASE & TOP MECH 24 IN	34	FT		C		366.00000			
			X20022	GRIND ASPHALT (PER SF)	34	SF			C				
			114201	ASPHALT (BASE)	4	TN			C				
			114202	ASPHALT (TOP)	1	TN			C				
I-N-S		RED5-4		CONDUIT BELL REDUCER DB 5 IN TO 4 IN	4	EA		C		366.00000	3373.2		
			573384	CONDUIT BELL REDUCER 5 IN TO 4 IN	4	EA			C				
I-N-S		RED4-3		CONDUIT BELL REDUCER DB 4 IN TO 3 IN	3	EA		C		366.00000	3373.2		
			573380	CONDUIT BELL REDUCER 4 IN TO 3 IN	3	EA			C				

WORK FUNC	FAC CODE	DESC	EXIST TAG	NEW TAG	CONSTRUCTION NOTES
I	PH	PRI HANDHOLE		H120721	NO LOCATION CONSTRUCTION NOTES FOUND

8-77 (Addendum No. 2)

LOC 003 SHEET 01 |_| COMPLETED |_| PARTIALLY COMPLETED |_| ENERGIZED

AS-BUILT RECORDED BY: _____ DATE: _____ MATERIAL CHECK BY: _____ DATE: _____

SAN DIEGO GAS AND ELECTRIC
DPSS - CONSTRUCTION ORDER - CUSTOMER COPY

WORK ORDER: 2818650 PROJECT: 436323 JOB:01 REV:0 TYPE: UD NAME: E MISSION RD 20A T&C MUNI TRENCH STATUS: ACT

LOCATION: 004 SHEET: 01 DISTRICT: NE DESIGNED BY: MIKE VAN ZANDT PHONE: 291-1192 LOCATION 004 OF 033

WRK F-C-T	MU ID	AU ID	STOCK#	DESCRIPTION/CONSTRUCTION NOTES	QTY RQD	UM	ACT QTY	WRK RSP	MAT RSP	ACCOUNT	STNDRD PAGE	INST/APP BY	DATE
I-N-S		AS-2CT		ASPHALT 2 SAW CUT AND BREAK MECH	20	FT		C		366.00000			
I-N-S		BH03XH		MACH DIG TRENCH 3 FT DEEP BACKHOE	20	FT		C		366.00000	G7453		
			X20201	TRAFFIC BEARING STEEL PLATE	15	EA			C				
			114215	ASPHALT, COLD MIX	1	TN			C				
I-N-S		REM-3'		TRENCH SPOIL 3 FT DEPTH	20	FT		C		366.00000			
			X30007	DUMPING FEE	5	CY			C				
I-N-S		SHD-12		SHADE TRENCH WITH SAND - 12 INCH WIDTH	20	FT		C		366.00000	G7405		
			611492	SAND, FILL RECYCLED MATLS PREFFERED	2	TN			C				
I-N-S		DG--12		BACKFILL DG 12 IN WIDE X 12 IN DEEP	20	FT		C		366.00000	G7409		
			388702	DECOMP GRANITE RECYCLE MEETING GRN BOOK	2	TN			C				
I-N-S		AT-H12		ASPHALT TOP MANUAL 12 IN	20	FT		C		366.00000			
			114202	ASPHALT (TOP)	1	TN			C				
I-N-S		AB-M12		ASPHALT BASE MECH 12 IN	20	FT		C		366.00000			
			114201	ASPHALT (BASE)	2	TN			C				
I-N-S		1DB3-S		1-3 IN DB CONDUIT SEC	20	FT		C		366.00000	3373.1		
			249664	CONDUIT DB 3 IN 20 FT LENGTH	20	FT			C				
I-N-S		1DB3SB		1-3 IN DB 90 D 36 IN R BEND SEC	2	EA		C		366.00000	3373.2		
			322048	BEND CONDUIT DB 3 IN 90 D 36 IN R	2	EA			C				

WORK FUNC FAC CODE DESC EXIST TAG NEW TAG

CONSTRUCTION NOTES

INSTALL NEW SERVICE CONDUIT TO 134 E. MISSION, MTR#1464276.

8-78 (Addendum no. 2)

LOC 004 SHEET 01 |_| COMPLETED |_| PARTIALLY COMPLETED |_| ENERGIZED

AS-BUILT RECORDED BY: _____ DATE: _____ MATERIAL CHECK BY: _____ DATE: _____

WORK ORDER: 2818650 PROJECT: 436323 JOB:01 REV:0 TYPE: UD NAME: E MISSION RD 20A T&C MUNI TRENCH STATUS: ACT

LOCATION: 005 SHEET: 01 DISTRICT: NE DESIGNED BY: MIKE VAN ZANDT PHONE: 291-1192 LOCATION 005 OF 033

WRK F-C-T	MU ID	AU ID	STOCK#	DESCRIPTION/CONSTRUCTION NOTES	QTY RQD	UM	ACT QTY	WRK RSP	MAT RSP	ACCOUNT	STNDRD PAGE	INST/APP BY	DATE
I-N-S		AS-2CT		ASPHALT 2 SAW CUT AND BREAK MECH	30	FT		C		366.00000			
I-N-S		BH04XH		MACH DIG TRENCH 4 FT DEEP BACKHOE	30	FT		C		366.00000	G7453		
			X20201	TRAFFIC BEARING STEEL PLATE	30	EA			C				
			114215	ASPHALT, COLD MIX	1	TN			C				
I-N-S		REM-4'		TRENCH SPOIL 4 FT DEPTH	30	FT		C		366.00000			
			X30007	DUMPING FEE	11	CY			C				
I-N-S		SLR-12		BACKFILL SLURRY 12 IN WIDE X 12 IN DEEP	10	FT		C		366.00000	G7409		
			656400	SLURRY MIX, 1 SACK SAND	1	CY			C				
I-N-S		AT-H12		ASPHALT TOP MANUAL 12 IN	30	FT		C		366.00000			
			114202	ASPHALT (TOP)	1	TN			C				
I-N-S		AB-M12		ASPHALT BASE MECH 12 IN	30	FT		C		366.00000			
			114201	ASPHALT (BASE)	3	TN			C				
I-N-S		LN-S/U		LANE CLOSURE URBAN STREET	1	EA		C		366.00000			
I-N-S		LN/S/S		LANE CLOSURE URBAN ST (STREET REPAIR)	1	EA		C		366.00000			
I-N-S		2EB3SL		2-3 IN EB CONDUIT SLURRY ENCASED	40	FT		C		366.00000	3376.1		
			249664	CONDUIT DB 3 IN 20 FT LENGTH	80	FT			C				
			656400	SLURRY MIX, 1 SACK SAND	2	CY			C				
I-N-S		2-3SLS		2-3 IN DB 22.5 D 25 FT R SLURRY ENCASED	3	EA		C		366.00000	3373.2		
			322144	BEND CONDUIT DB 3 IN 22.5 D 25 FT R	6	EA			C				
			656400	SLURRY MIX, 1 SACK SAND	2	CY			C				

WORK FUNC	FAC CODE	DESC	EXIST TAG	NEW TAG

CONSTRUCTION NOTES

REMAINING TRENCH ON LOC 2.

8-79 (ADDENDUM NO. 2)

LOC 005 SHEET 01 |_| COMPLETED |_| PARTIALLY COMPLETED |_| ENERGIZED

AS-BUILT RECORDED BY: _____ DATE: _____ MATERIAL CHECK BY: _____ DATE: _____

WORK ORDER: 2818650 PROJECT: 436323 JOB:01 REV:0 TYPE: UD NAME: E MISSION RD 20A T&C MUNI TRENCH STATUS: ACT

LOCATION: 006 SHEET: 01 DISTRICT: NE DESIGNED BY: MIKE VAN ZANDT PHONE: 291-1192 LOCATION 006 OF 033

WRK F-C-T	MU ID	AU ID	STOCK#	DESCRIPTION/CONSTRUCTION NOTES	QTY RQD	UM	ACT QTY	WRK RSP	MAT RSP	ACCOUNT	STNDRD PAGE	INST/APP BY	DATE
				NO DESIGN UNITS FOR THIS LOCATION									

WORK FUNC	FAC CODE	DESC	EXIST TAG	NEW TAG	CONSTRUCTION NOTES
			P14737		NO WORK THIS LOC THIS PHASE. RFS BEND DURING CABLE PHASE.

8-80 (ADDENDUM NO. 2)

LOC 006 SHEET 01 |_| COMPLETED |_| PARTIALLY COMPLETED |_| ENERGIZED

AS-BUILT RECORDED BY: _____ DATE: _____ MATERIAL CHECK BY: _____ DATE: _____

WORK ORDER: 2818650 PROJECT: 436323 JOB:01 REV:0 TYPE: UD NAME: E MISSION RD 20A T&C MUNI TRENCH STATUS: ACT

LOCATION: 007 SHEET: 01 DISTRICT: NE DESIGNED BY: MIKE VAN ZANDT PHONE: 291-1192 LOCATION 007 OF 033

WRK F-C-T	MU ID	AU ID	STOCK#	DESCRIPTION/CONSTRUCTION NOTES	QTY RQD	UM	ACT QTY	WRK RSP	MAT RSP	ACCOUNT	STNDRD PAGE	INST/APP BY	DATE
I-N-S		AS-2CT		ASPHALT 2 SAW CUT AND BREAK MECH	100	FT		C		366.00000			
I-N-S		BH04XH		MACH DIG TRENCH 4 FT DEEP BACKHOE	100	FT		C		366.00000	G7453		
			X20201	TRAFFIC BEARING STEEL PLATE	100	EA			C				
			114215	ASPHALT, COLD MIX	1	TN			C				
I-N-S		REM-4'		TRENCH SPOIL 4 FT DEPTH	100	FT		C		366.00000			
			X30007	DUMPING FEE	34	CY			C				
I-N-S		SLR-12		BACKFILL SLURRY 12 IN WIDE X 12 IN DEEP	200	FT		C		366.00000	G7409		
			656400	SLURRY MIX, 1 SACK SAND	8	CY			C				
I-N-S		AT-H12		ASPHALT TOP MANUAL 12 IN	100	FT		C		366.00000			
			114202	ASPHALT (TOP)	2	TN			C				
I-N-S		AB-M12		ASPHALT BASE MECH 12 IN	100	FT		C		366.00000			
			114201	ASPHALT (BASE)	8	TN			C				
I-N-S		LN-S/U		LANE CLOSURE URBAN STREET	1	EA		C		366.00000			
I-N-S		LN/S/S		LANE CLOSURE URBAN ST (STREET REPAIR)	1	EA		C		366.00000			
I-N-S		1EB3SL		1-3 IN EB CONDUIT SLURRY ENCASED	70	FT		C		366.00000	3376.1		
			249664	CONDUIT DB 3 IN 20 FT LENGTH	70	FT			C				
			656400	SLURRY MIX, 1 SACK SAND	2	CY			C				
I-N-S		1-3SLS		1-3 IN DB 22.5 D 25 FT R SLURRY ENCASED	3	EA		C		366.00000	3373.2		
			322144	BEND CONDUIT DB 3 IN 22.5 D 25 FT R	3	EA			C				
			656400	SLURRY MIX, 1 SACK SAND	1	CY			C				
I-N-S		SAW-CC		SAW CUT CONCRETE	10	FT		C		366.00000			
I-N-S		SW-BRK		BREAK SIDEWALK (5X5) MANUALLY	2	EA		C		366.00000			
I-N-S		CC-WLK		CONCRETE SIDEWALK SECTION (5X5) FINISHED	2	EA		C		366.00000			
			248205	CONCRETE - 6 SACK (3/4" ROCK MIX)	1	CY			C				
I-N-S		H-BRDS		HEADER BOARDS (INCLUDES TIME TO I & R)	10	FT		C		366.00000			

WORK FUNC | FAC CODE | DESC | EXIST TAG | NEW TAG

CONSTRUCTION NOTES

STANDARD SIDEWALK BREAK AND REPAIR

LOC 007 SHEET 01 |_| COMPLETED |_| PARTIALLY COMPLETED |_| ENERGIZED

AS-BUILT RECORDED BY: _____ DATE: _____ MATERIAL CHECK BY: _____ DATE: _____

8-81 (Addendum no. 2)

SAN DIEGO GAS AND ELECTRIC
DPSS - CONSTRUCTION ORDER - CUSTOMER COPY

WORK ORDER: 2818650 PROJECT: 436323 JOB:01 REV:0 TYPE: UD NAME: E MISSION RD 20A T&C MUNI TRENCH STATUS: ACT

LOCATION: 008 SHEET: 01 DISTRICT: NE DESIGNED BY: MIKE VAN ZANDT PHONE: 291-1192 LOCATION 008 OF 033

WRK F-C-T	MU ID	AU ID	STOCK#	DESCRIPTION/CONSTRUCTION NOTES	QTY RQD	UM	ACT QTY	WRK RSP	MAT RSP	ACCOUNT	STNDRD PAGE	INST/APP BY	DATE
				NO DESIGN UNITS FOR THIS LOCATION									

WORK FUNC	FAC CODE	DESC	EXIST	TAG	NEW	TAG

CONSTRUCTION NOTES

NO WORK THIS LOC THIS PHASE.

8-82 (addendum no. 2)

LOC 008 SHEET 01 |_| COMPLETED |_| PARTIALLY COMPLETED |_| ENERGIZED

AS-BUILT RECORDED BY: _____ DATE: _____ MATERIAL CHECK BY: _____ DATE: _____

SAN DIEGO GAS AND ELECTRIC
DPSS - CONSTRUCTION ORDER - CUSTOMER COPY

WORK ORDER: 2818650 PROJECT: 436323 JOB:01 REV:0 TYPE: UD NAME: E MISSION RD 20A T&C MUNI TRENCH STATUS: ACT

LOCATION: 009 SHEET: 01 DISTRICT: NE DESIGNED BY: MIKE VAN ZANDT PHONE: 291-1192 LOCATION 009 OF 033

WRK F-C-T	MU ID	AU ID	STOCK#	DESCRIPTION/CONSTRUCTION NOTES	QTY RQD	UM	ACT QTY	WRK RSP	MAT RSP	ACCOUNT	STNDRD PAGE	INST/APP BY	DATE
I-N-S		HAND-D		HAND DIG TO POLE OR EQUIPMENT	1	EA		C		366.00000			
I-N-S		1-3SLB		1-3 IN DB 90 D 36 IN R BEND SLURRY ENC	1	EA		C		366.00000	3373.2		
			322048	BEND CONDUIT DB 3 IN 90 D 36 IN R	1	EA			C				
			656400	SLURRY MIX, 1 SACK SAND	1	CY			C				

WORK FUNC FAC CODE DESC EXIST TAG NEW TAG

CONSTRUCTION NOTES

NO LOCATION CONSTRUCTION NOTES FOUND

8-83 (ADDENDUM NO. 2)

LOC 009 SHEET 01 |_| COMPLETED |_| PARTIALLY COMPLETED |_| ENERGIZED

AS-BUILT RECORDED BY: _____ DATE: _____ MATERIAL CHECK BY: _____ DATE: _____

WORK ORDER: 2818650 PROJECT: 436323 JOB:01 REV:0 TYPE: UD NAME: E MISSION RD 20A T&C MUNI TRENCH STATUS: ACT

LOCATION: 010 SHEET: 01 DISTRICT: NE DESIGNED BY: MIKE VAN ZANDT PHONE: 291-1192 LOCATION 010 OF 033

WRK F-C-T	MU ID	AU ID	STOCK#	DESCRIPTION/CONSTRUCTION NOTES	QTY RQD	UM	ACT QTY	WRK RSP	MAT RSP	ACCOUNT	STNDRD PAGE	INST/APP BY	DATE
I-N-S		AS-2CT		ASPHALT 2 SAW CUT AND BREAK MECH	300	FT		C		366.00000			
I-N-S		BH04XH		MACH DIG TRENCH 4 FT DEEP BACKHOE	300	FT		C		366.00000	G7453		
			X20201	TRAFFIC BEARING STEEL PLATE	300	EA			C				
			114215	ASPHALT, COLD MIX	3	TN			C				
I-N-S		REM-4'		TRENCH SPOIL 4 FT DEPTH	300	FT		C		366.00000			
			X30007	DUMPING FEE	102	CY			C				
I-N-S		SLR-24		BACKFILL SLURRY 24 IN WIDE X 12 IN DEEP	600	FT		C		366.00000	G7409		
			656400	SLURRY MIX, 1 SACK SAND	45	CY			C				
I-N-S		AT-H18		ASPHALT TOP MANUAL 18 IN	300	FT		C		366.00000			
			114202	ASPHALT (TOP)	7	TN			C				
I-N-S		AB-M18		ASPHALT BASE MECH 18 IN	100	FT		C		366.00000			
			114201	ASPHALT (BASE)	11	TN			C				
I-N-S		LN-S/U		LANE CLOSURE URBAN STREET	2	EA		C		366.00000			
I-N-S		XING-U		TRAFFIC CONDITIONS (STREET CROSSINGS)	60	FT		C		366.00000			
			114215	ASPHALT, COLD MIX	1	TN			C				
I-N-S		LN/S/S		LANE CLOSURE URBAN ST (STREET REPAIR)	2	EA		C		366.00000			
I-N-S		XING/S		TRAFFIC COND. (XING LANE) STREET REPAIR	60	FT		C		366.00000			
I-N-S		2DB5SL		2-5 IN DB CONDUIT SLURRY ENCASED	300	FT		C		366.00000	3376.1		
			249728	CONDUIT DB 5 IN 20 FT LENGTH	600	FT			C				
			656400	SLURRY MIX, 1 SACK SAND	10	CY			C				
I-N-S		1EB4SL		1-4 IN EB CONDUIT SLURRY ENCASED	300	FT		C		366.00000	3376.1		
			249710	CONDUIT DB 100 4 IN 20 FT LENGTH	300	FT			C				
			656400	SLURRY MIX, 1 SACK SAND	6	CY			C				

WORK FUNC	FAC CODE	DESC	EXIST TAG	NEW TAG

CONSTRUCTION NOTES

NO LOCATION CONSTRUCTION NOTES FOUND

8-84 (Attachment No. 2)

LOC 010 SHEET 01 |_| COMPLETED |_| PARTIALLY COMPLETED |_| ENERGIZED

AS-BUILT RECORDED BY: _____ DATE: _____ MATERIAL CHECK BY: _____ DATE: _____

WORK ORDER: 2818650 PROJECT: 436323 JOB:01 REV:0 TYPE: UD NAME: E MISSION RD 20A T&C MUNI TRENCH STATUS: ACT

LOCATION: 011 SHEET: 01 DISTRICT: NE DESIGNED BY: MIKE VAN ZANDT PHONE: 291-1192 LOCATION 011 OF 033

WRK F-C-T	MU ID	AU ID	STOCK#	DESCRIPTION/CONSTRUCTION NOTES	QTY RQD	UM	ACT QTY	WRK RSP	MAT RSP	ACCOUNT	STNDRD PAGE	INST/APP BY	DATE
I-N-S		AS-2CT		ASPHALT 2 SAW CUT AND BREAK MECH	40	FT		C		366.00000			
I-N-S		BH03XH		MACH DIG TRENCH 3 FT DEEP BACKHOE	70	FT		C		366.00000	G7453		
			X20201	TRAFFIC BEARING STEEL PLATE	53	EA			C				
			114215	ASPHALT, COLD MIX	1	TN			C				
I-N-S		REM-3'		TRENCH SPOIL 3 FT DEPTH	70	FT		C		366.00000			
			X30007	DUMPING FEE	18	CY			C				
I-N-S		SLR-12		BACKFILL SLURRY 12 IN WIDE X 12 IN DEEP	140	FT		C		366.00000	G7409		
			656400	SLURRY MIX, 1 SACK SAND	6	CY			C				
I-N-S		AT-H12		ASPHALT TOP MANUAL 12 IN	40	FT		C		366.00000			
			114202	ASPHALT (TOP)	1	TN			C				
I-N-S		AB-M12		ASPHALT BASE MECH 12 IN	40	FT		C		366.00000			
			114201	ASPHALT (BASE)	3	TN			C				
I-N-S		LN-S/U		LANE CLOSURE URBAN STREET	2	EA		C		366.00000			
I-N-S		XING-U		TRAFFIC CONDITIONS (STREET CROSSINGS)	40	FT		C		366.00000			
			114215	ASPHALT, COLD MIX	1	TN			C				
I-N-S		LN/S/S		LANE CLOSURE URBAN ST (STREET REPAIR)	2	EA		C		366.00000			
I-N-S		XING/S		TRAFFIC COND. (XING LANE) STREET REPAIR	40	FT		C		366.00000			
I-N-S		PLANTU		REMOVE/REPLACE LANDSCAPING	5	FT		C		366.00000			
I-N-S		SAW-CC		SAW CUT CONCRETE	20	FT		C		366.00000			
I-N-S		SW-BRK		BREAK SIDEWALK (5X5) MANUALLY	3	EA		C		366.00000			
I-N-S		CC-WLK		CONCRETE SIDEWALK SECTION (5X5) FINISHED	3	EA		C		366.00000			
			248205	CONCRETE - 6 SACK (3/4" ROCK MIX)	2	CY			C				
I-N-S		1EB2SL		1-2 IN DB CONDUIT SLURRY ENCASED	70	FT		C		366.00000	3376.1		
			249632	CONDUIT DB 2 IN 20 FT LENGTH	70	FT			C				
			656400	SLURRY MIX, 1 SACK SAND	2	CY			C				
				NOTE: 2" SERVICE TO 140 E. MISSION. MTR#1194127.									
I-N-S		1-2SLB		1-2 IN DB 90 D 36 IN R BEND SLURRY ENC	1	EA		C		366.00000	3373.2		

LOC 011 SHEET 01 |_| COMPLETED |_| PARTIALLY COMPLETED |_| ENERGIZED

AS-BUILT RECORDED BY: _____ DATE: _____ MATERIAL CHECK BY: _____ DATE: _____

8-85 (Addendum No. 2)

WORK ORDER: 2818650 PROJECT: 436323 JOB:01 REV:0 TYPE: UD NAME: E MISSION RD 20A T&C MUNI TRENCH STATUS: ACT

LOCATION: 011 SHEET: 02 DISTRICT: NE DESIGNED BY: MIKE VAN ZANDT PHONE: 291-1192 LOCATION 011 OF 033

WRK F-C-T	MU ID	AU ID	STOCK#	DESCRIPTION/CONSTRUCTION NOTES	QTY RQD	UM	ACT QTY	WRK RSP	MAT RSP	ACCOUNT	STNDRD PAGE	INST/APP BY	DATE
			321812	BEND CONDUIT DB 2 IN 90 D 36 IN R	1	EA			C				
			656400	SLURRY MIX, 1 SACK SAND	1	CY			C				
I-N-S		2EB2SL		2-2 IN EB CONDUIT SLURRY ENCASED	68	FT		C		366.00000	3376.1		
			249632	CONDUIT DB 2 IN 20 FT LENGTH	136	FT			C				
			656400	SLURRY MIX, 1 SACK SAND	3	CY			C				
				NOTE: CATV / TELCO. CREW TO IDENTIFY AND TAPE ENDS AT HOUSE.									
I-N-S		2-2SLB		2-2 IN DB 90 D 36 IN R BEND SLURRY ENC	1	EA		C		366.00000	3373.2		
			321812	BEND CONDUIT DB 2 IN 90 D 36 IN R	2	EA			C				
			656400	SLURRY MIX, 1 SACK SAND	1	CY			C				

WORK FUNC | FAC CODE | DESC | EXIST TAG | NEW TAG

CONSTRUCTION NOTES

NO LOCATION CONSTRUCTION NOTES FOUND

8-86 (Addendum No. 2)

LOC 011 SHEET 02 |_| COMPLETED |_| PARTIALLY COMPLETED |_| ENERGIZED

AS-BUILT RECORDED BY: _____ DATE: _____ MATERIAL CHECK BY: _____ DATE: _____

WORK ORDER: 2818650 PROJECT: 436323 JOB:01 REV:0 TYPE: UD NAME: E MISSION RD 20A T&C MUNI TRENCH STATUS: ACT

LOCATION: 012 SHEET: 01 DISTRICT: NE DESIGNED BY: MIKE VAN ZANDT PHONE: 291-1192 LOCATION 012 OF 033

WRK F-C-T	MU ID	AU ID	STOCK#	DESCRIPTION/CONSTRUCTION NOTES	QTY RQD	UM	ACT QTY	WRK RSP	MAT RSP	ACCOUNT	STNDRD PAGE	INST/APP BY	DATE
I-N-S		HAND-D		HAND DIG TO POLE OR EQUIPMENT	2	EA		C		366.00000			
I-N-S		1-2SLB		1-2 IN DB 90 D 36 IN R BEND SLURRY ENC	4	EA		C		366.00000	3373.2		
			321812	BEND CONDUIT DB 2 IN 90 D 36 IN R	4	EA			C				
			656400	SLURRY MIX, 1 SACK SAND	1	CY			C				
				NOTE: 2 SPARE TO CROSS E. MISSION.									
I-N-S		1-3SLB		1-3 IN DB 90 D 36 IN R BEND SLURRY ENC	1	EA		C		366.00000	3373.2		
			322048	BEND CONDUIT DB 3 IN 90 D 36 IN R	1	EA			C				
			656400	SLURRY MIX, 1 SACK SAND	1	CY			C				
I-N-S		SAW-CC		SAW CUT CONCRETE	10	FT		C		366.00000			
I-N-S		SW-BRK		BREAK SIDEWALK (5X5) MANUALLY	1	EA		C		366.00000			
I-N-S		CC-WLK		CONCRETE SIDEWALK SECTION (5X5) FINISHED	1	EA		C		366.00000			
			248205	CONCRETE - 6 SACK (3/4" ROCK MIX)	1	CY			C				

WORK FUNC	FAC CODE	DESC	EXIST TAG	NEW TAG

CONSTRUCTION NOTES

NO LOCATION CONSTRUCTION NOTES FOUND

8-87 (addendum no. 2)

LOC 012 SHEET 01 |_| COMPLETED |_| PARTIALLY COMPLETED |_| ENERGIZED

AS-BUILT RECORDED BY: _____ DATE: _____ MATERIAL CHECK BY: _____ DATE: _____

WORK ORDER: 2818650 PROJECT: 436323 JOB:01 REV:0 TYPE: UD NAME: E MISSION RD 20A T&C MUNI TRENCH STATUS: ACT

LOCATION: 013 SHEET: 01 DISTRICT: NE DESIGNED BY: MIKE VAN ZANDT PHONE: 291-1192 LOCATION 013 OF 033

WRK F-C-T	MU ID	AU ID	STOCK#	DESCRIPTION/CONSTRUCTION NOTES	QTY RQD	UM	ACT QTY	WRK RSP	MAT RSP	ACCOUNT	STNDRD PAGE	INST/APP BY	DATE
I-N-S		SAW-CC		SAW CUT CONCRETE	10	FT		C		366.00000			
I-N-S		SW-BRK		BREAK SIDEWALK (5X5) MANUALLY	2	EA		C		366.00000			
I-N-S		CC-WLK		CONCRETE SIDEWALK SECTION (5X5) FINISHED	2	EA		C		366.00000			
			248205	CONCRETE - 6 SACK (3/4" ROCK MIX)	1	CY			C				
I-N-S		H-BRDS		HEADER BOARDS (INCLUDES TIME TO I & R)	10	FT		C		366.00000			
I-N-S		3'HD-H		HAND DIG TRENCH 3 FT DEEP HARD	30	FT		C		366.00000	G7453		
I-N-S		REM-3'		TRENCH SPOIL 3 FT DEPTH	30	FT		C		366.00000			
			X30007	DUMPING FEE	8	CY			C				
I-N-S		SHD-12		SHADE TRENCH WITH SAND - 12 INCH WIDTH	30	FT		C		366.00000	G7405		
			611492	SAND, FILL RECYCLED MATLS PREFFERED	2	TN			C				
I-N-S		DG--12		BACKFILL DG 12 IN WIDE X 12 IN DEEP	60	FT		C		366.00000	G7409		
			388702	DECOMP GRANITE RECYCLE MEETING GRN BOOK	4	TN			C				
I-N-S		PLANTU		REMOVE/REPLACE LANDSCAPING	10	FT		C		366.00000			
I-N-S		1DB2SB		1-2 IN DB 90 D 24 IN R BEND SEC	30	EA		C		366.00000	3373.2		
			321984	BEND CONDUIT DB 2 IN 90 D 24 IN R	30	EA			C				
				NOTE: 2" SERVICE TO 202 E. MISSION MTR# 1441175.									
I-N-S		1DB2-S		1-2 IN DB CONDUIT SEC	2	FT		C		366.00000	3373.1		
			249632	CONDUIT DB 2 IN 20 FT LENGTH	2	FT			C				

WORK FUNC	FAC CODE	DESC	EXIST TAG	NEW TAG

CONSTRUCTION NOTES

NO LOCATION CONSTRUCTION NOTES FOUND

8-88 (ADDENDUM NO. 2)

LOC 013 SHEET 01 |_| COMPLETED |_| PARTIALLY COMPLETED |_| ENERGIZED

AS-BUILT RECORDED BY: _____ DATE: _____ MATERIAL CHECK BY: _____ DATE: _____

WORK ORDER: 2818650 PROJECT: 436323 JOB:01 REV:0 TYPE: UD NAME: E MISSION RD 20A T&C MUNI TRENCH STATUS: ACT

LOCATION: 014 SHEET: 01 DISTRICT: NE DESIGNED BY: MIKE VAN ZANDT PHONE: 291-1192 LOCATION 014 OF 033

WRK F-C-T	MU ID	AU ID	STOCK#	DESCRIPTION/CONSTRUCTION NOTES	QTY RQD	UM	ACT QTY	WRK RSP	MAT RSP	ACCOUNT	STNDRD PAGE	INST/APP BY	DATE
				NO DESIGN UNITS FOR THIS LOCATION									

WORK FUNC	FAC CODE	DESC	EXIST TAG	NEW TAG	CONSTRUCTION NOTES
			P10396		NO WORK THIS LOC THIS PHASE. RFS BEND DURING CABLE PHASE.

8-89 (ADDENDUM NO. 2)

LOC 014 SHEET 01 |_| COMPLETED |_| PARTIALLY COMPLETED |_| ENERGIZED

AS-BUILT RECORDED BY: _____ DATE: _____ MATERIAL CHECK BY: _____ DATE: _____

WORK ORDER: 2818650 PROJECT: 436323 JOB:01 REV:0 TYPE: UD NAME: E MISSION RD 20A T&C MUNI TRENCH STATUS: ACT

LOCATION: 015 SHEET: 01 DISTRICT: NE DESIGNED BY: MIKE VAN ZANDT PHONE: 291-1192 LOCATION 015 OF 033

WRK F-C-T	MU ID	AU ID	STOCK#	DESCRIPTION/CONSTRUCTION NOTES	QTY RQD	UM	ACT QTY	WRK RSP	MAT RSP	ACCOUNT	STNDRD PAGE	INST/APP BY	DATE
				NO DESIGN UNITS FOR THIS LOCATION									

WORK FUNC	FAC CODE	DESC	EXIST TAG	NEW TAG	CONSTRUCTION NOTES
					NO WORK THIS LOC THIS PHASE. CONDUIT IS ABANDONED DURING CABLE PHASE.

8-90 (ADDENDUM NO. 2)

LOC 015 SHEET 01 |_| COMPLETED |_| PARTIALLY COMPLETED |_| ENERGIZED

AS-BUILT RECORDED BY: _____ DATE: _____ MATERIAL CHECK BY: _____ DATE: _____

SAN DIEGO GAS AND ELECTRIC
DPSS - CONSTRUCTION ORDER - CUSTOMER COPY

WORK ORDER: 2818650 PROJECT: 436323 JOB:01 REV:0 TYPE: UD NAME: E MISSION RD 20A T&C MUNI TRENCH STATUS: ACT

LOCATION: 016 SHEET: 01 DISTRICT: NE DESIGNED BY: MIKE VAN ZANDT PHONE: 291-1192 LOCATION 016 OF 033

WRK F-C-T	MU ID	AU ID	STOCK#	DESCRIPTION/CONSTRUCTION NOTES	QTY RQD	UM	ACT QTY	WRK RSP	MAT RSP	ACCOUNT	STNDRD PAGE	INST/APP BY	DATE
I-N-S		1EB3SL		1-3 IN EB CONDUIT SLURRY ENCASED	140	FT		C		366.00000	3376.1		
			249664	CONDUIT DB 3 IN 20 FT LENGTH	140	FT			C				
			656400	SLURRY MIX, 1 SACK SAND	3	CY			C				
I-N-S		1-3SLS		1-3 IN DB 22.5 D 25 FT R SLURRY ENCASED	2	EA		C		366.00000	3373.2		
			322144	BEND CONDUIT DB 3 IN 22.5 D 25 FT R	2	EA			C				
			656400	SLURRY MIX, 1 SACK SAND	1	CY			C				
I-N-S		3'HD-H		HAND DIG TRENCH 3 FT DEEP HARD	5	FT		C		366.00000	G7453		
I-N-S		REM-3'		TRENCH SPOIL 3 FT DEPTH	5	FT		C		366.00000			
			X30007	DUMPING FEE	2	CY			C				
I-N-S		SLR-12		BACKFILL SLURRY 12 IN WIDE X 12 IN DEEP	15	FT		C		366.00000	G7409		
			656400	SLURRY MIX, 1 SACK SAND	1	CY			C				

WORK FUNC | FAC CODE | DESC | EXIST TAG | NEW TAG

CONSTRUCTION NOTES

REMAINING TRENCH ON LOC 10,SIDEWALK REPAIR ON LOC 12.

8-91 (ADDENDUM NO. 2)

LOC 016 SHEET 01 |_| COMPLETED |_| PARTIALLY COMPLETED |_| ENERGIZED

AS-BUILT RECORDED BY: _____ DATE: _____ MATERIAL CHECK BY: _____ DATE: _____

WORK ORDER: 2818650 PROJECT: 436323 JOB:01 REV:0 TYPE: UD NAME: E MISSION RD 20A T&C MUNI TRENCH STATUS: ACT

LOCATION: 017 SHEET: 01 DISTRICT: NE DESIGNED BY: MIKE VAN ZANDT PHONE: 291-1192 LOCATION 017 OF 033

WRK F-C-T	MU ID	AU ID	STOCK#	DESCRIPTION/CONSTRUCTION NOTES	QTY RQD	UM	ACT QTY	WRK RSP	MAT RSP	ACCOUNT	STNDRD PAGE	INST/APP BY	DATE
				NO DESIGN UNITS FOR THIS LOCATION									

WORK FUNC	FAC CODE	DESC	EXIST TAG	NEW TAG	CONSTRUCTION NOTES
			P14667		NO WORK THIS LOC THIS PHASE. RFS BEND DURING CABLE PHASE.

(2 on unknown 8-22-2006)

LOC 017 SHEET 01 |_| COMPLETED |_| PARTIALLY COMPLETED |_| ENERGIZED

AS-BUILT RECORDED BY: _____ DATE: _____ MATERIAL CHECK BY: _____ DATE: _____

SAN DIEGO GAS AND ELECTRIC
DPSS - CONSTRUCTION ORDER - CUSTOMER COPY

WORK ORDER: 2818650 PROJECT: 436323 JOB:01 REV:0 TYPE: UD NAME: E MISSION RD 20A T&C MUNI TRENCH STATUS: ACT

LOCATION: 018 SHEET: 01 DISTRICT: NE DESIGNED BY: MIKE VAN ZANDT PHONE: 291-1192 LOCATION 018 OF 033

WRK F-C-T	MU ID	AU ID	STOCK#	DESCRIPTION/CONSTRUCTION NOTES	QTY RQD	UM	ACT QTY	WRK RSP	MAT RSP	ACCOUNT	STNDRD PAGE	INST/APP BY	DATE
I-N-S		3421-1		PAD 3421 1-PHASE TRANSFORMER	1	EA		C		366.00000	3421.1		
			514240	PAD 1-PHASE XFMR / 3-PHASE F.C. 3421	1	EA			C				
I-N-S		X-XF1P		PAD PREP 3421 PAD (1-PHASE TRANSFORMER)	1	EA		C		366.00000			
I-N-S		1-3SLB		1-3 IN DB 90 D 36 IN R BEND SLURRY ENC	3	EA		C		366.00000	3373.2		
			322048	BEND CONDUIT DB 3 IN 90 D 36 IN R	3	EA			C				
			656400	SLURRY MIX, 1 SACK SAND	1	CY			C				
				NOTE: 2 SEC, 1 PRI.									
I-N-S		PLANTU		REMOVE/REPLACE LANDSCAPING	5	FT		C		366.00000			
I-N-S		TG-E-W		TRENCH GRD WIRE W/O RODS (EQUIP/SWI/HH)	1	EA		C		367.10000	4510.1		
			812816	WIRE BARE COPPER #2-7 STR SOFT DRAWN	8	LB			C				

WORK FUNC	FAC CODE	DESC	EXIST TAG	NEW TAG	CONSTRUCTION NOTES
I	PD	PAD		D154169	SET PAD BEHIND SIDWALK.

8-93 (400 DWN NO. 2)

LOC 018 SHEET 01 |_| COMPLETED |_| PARTIALLY COMPLETED |_| ENERGIZED

AS-BUILT RECORDED BY: _____ DATE: _____ MATERIAL CHECK BY: _____ DATE: _____

WORK ORDER: 2818650 PROJECT: 436323 JOB:01 REV:0 TYPE: UD NAME: E MISSION RD 20A T&C MUNI TRENCH STATUS: ACT

LOCATION: 019 SHEET: 01 DISTRICT: NE DESIGNED BY: MIKE VAN ZANDT PHONE: 291-1192 LOCATION 019 OF 033

WRK F-C-T	MU ID	AU ID	STOCK#	DESCRIPTION/CONSTRUCTION NOTES	QTY RQD	UM	ACT QTY	WRK RSP	MAT RSP	ACCOUNT	STNDRD PAGE	INST/APP BY	DATE
I-N-S		BH03XH		MACH DIG TRENCH 3 FT DEEP BACKHOE	14	FT		C		366.00000	G7453		
			X20201	TRAFFIC BEARING STEEL PLATE	11	EA			C				
			114215	ASPHALT, COLD MIX	1	TN			C				
I-N-S		REM-3'		TRENCH SPOIL 3 FT DEPTH	14	FT		C		366.00000			
			X30007	DUMPING FEE	4	CY			C				
I-N-S		SLR-12		BACKFILL SLURRY 12 IN WIDE X 12 IN DEEP	28	FT		C		366.00000	G7409		
			656400	SLURRY MIX, 1 SACK SAND	2	CY			C				
I-N-S		1EB3SL		1-3 IN EB CONDUIT SLURRY ENCASED	55	FT		C		366.00000	3376.1		
			249664	CONDUIT DB 3 IN 20 FT LENGTH	55	FT			C				
			656400	SLURRY MIX, 1 SACK SAND	2	CY			C				
I-N-S		1-3SLS		1-3 IN DB 22.5 D 25 FT R SLURRY ENCASED	2	EA		C		366.00000	3373.2		
			322144	BEND CONDUIT DB 3 IN 22.5 D 25 FT R	2	EA			C				
			656400	SLURRY MIX, 1 SACK SAND	1	CY			C				

WORK FUNC	FAC CODE	DESC	EXIST TAG	NEW TAG

CONSTRUCTION NOTES

NO LOCATION CONSTRUCTION NOTES FOUND

8-94 (ADDENDUM NO. 2)

LOC 019 SHEET 01 |_| COMPLETED |_| PARTIALLY COMPLETED |_| ENERGIZED

AS-BUILT RECORDED BY: _____ DATE: _____ MATERIAL CHECK BY: _____ DATE: _____

WORK ORDER: 2818650 PROJECT: 436323 JOB:01 REV:0 TYPE: UD NAME: E MISSION RD 20A T&C MUNI TRENCH STATUS: ACT

LOCATION: 020 SHEET: 01 DISTRICT: NE DESIGNED BY: MIKE VAN ZANDT PHONE: 291-1192 LOCATION 020 OF 033

WRK F-C-T	MU ID	AU ID	STOCK#	DESCRIPTION/CONSTRUCTION NOTES	QTY RQD	UM	ACT QTY	WRK RSP	MAT RSP	ACCOUNT	STNDRD PAGE	INST/APP BY	DATE
I-N-S		3"CP-B		CP BEND SCH 80 3 IN	1	EA		C		366.00000	4204.3		
			322472	ELBOW 3 IN-36 IN R 90 D PVC SCH 80	1	EA			C				
I-N-S		HAND-D		HAND DIG TO POLE OR EQUIPMENT	1	EA		C		366.00000			
I-N-S		CAP-03		CONDUIT END CAP 3 IN	1	EA		C		366.00000	3373.2		
			203328	CONDUIT END CAP 3 IN	1	EA			C				

WORK FUNC	FAC CODE	DESC	EXIST TAG	NEW TAG	CONSTRUCTION NOTES
			P192068		NO LOCATION CONSTRUCTION NOTES FOUND

8-95 (Addendum No. 2)

LOC 020 SHEET 01 |_| COMPLETED |_| PARTIALLY COMPLETED |_| ENERGIZED

AS-BUILT RECORDED BY: _____ DATE: _____ MATERIAL CHECK BY: _____ DATE: _____

WORK ORDER: 2818650 PROJECT: 436323 JOB:01 REV:0 TYPE: UD NAME: E MISSION RD 20A T&C MUNI TRENCH STATUS: ACT

LOCATION: 021 SHEET: 01 DISTRICT: NE DESIGNED BY: MIKE VAN ZANDT PHONE: 291-1192 LOCATION 021 OF 033

WRK F-C-T	MU ID	AU ID	STOCK#	DESCRIPTION/CONSTRUCTION NOTES	QTY RQD	UM	ACT QTY	WRK RSP	MAT RSP	ACCOUNT	STNDRD PAGE	INST/APP BY	DATE
I-N-S		AS-2CT		ASPHALT 2 SAW CUT AND BREAK MECH	20	FT		C		366.00000			
I-N-S		BH03XH		MACH DIG TRENCH 3 FT DEEP BACKHOE	40	FT		C		366.00000	G7453		
			X20201	TRAFFIC BEARING STEEL PLATE	30	EA			C				
			114215	ASPHALT, COLD MIX	1	TN			C				
I-N-S		REM-3'		TRENCH SPOIL 3 FT DEPTH	40	FT		C		366.00000			
			X30007	DUMPING FEE	10	CY			C				
I-N-S		SLR-12		BACKFILL SLURRY 12 IN WIDE X 12 IN DEEP	80	FT		C		366.00000	G7409		
			656400	SLURRY MIX, 1 SACK SAND	3	CY			C				
I-N-S		AT-H12		ASPHALT TOP MANUAL 12 IN	20	FT		C		366.00000			
			114202	ASPHALT (TOP)	1	TN			C				
I-N-S		AB-M12		ASPHALT BASE MECH 12 IN	20	FT		C		366.00000			
			114201	ASPHALT (BASE)	2	TN			C				
I-N-S		LN-S/U		LANE CLOSURE URBAN STREET	8	EA		C		366.00000			
I-N-S		LN/S/S		LANE CLOSURE URBAN ST (STREET REPAIR)	1	EA		C		366.00000			
I-N-S		SAW-CC		SAW CUT CONCRETE	10	FT		C		366.00000			
I-N-S		SW-BRK		BREAK SIDEWALK (5X5) MANUALLY	1	EA		C		366.00000			
I-N-S		CC-WLK		CONCRETE SIDEWALK SECTION (5X5) FINISHED	1	EA		C		366.00000			
			248205	CONCRETE - 6 SACK (3/4" ROCK MIX)	1	CY			C				
I-N-S		H-BRDS		HEADER BOARDS (INCLUDES TIME TO I & R)	5	FT		C		366.00000			
I-N-S		PLANTU		REMOVE/REPLACE LANDSCAPING	5	FT		C		366.00000			
I-N-S		1EB3SL		1-3 IN EB CONDUIT SLURRY ENCASED	70	FT		C		366.00000	3376.1		
			249664	CONDUIT DB 3 IN 20 FT LENGTH	70	FT			C				
			656400	SLURRY MIX, 1 SACK SAND	2	CY			C				
I-N-S		1-3SLS		1-3 IN DB 22.5 D 25 FT R SLURRY ENCASED	3	EA		C		366.00000	3373.2		
			322144	BEND CONDUIT DB 3 IN 22.5 D 25 FT R	3	EA			C				
			656400	SLURRY MIX, 1 SACK SAND	1	CY			C				
I-N-S		HAND-D		HAND DIG TO POLE OR EQUIPMENT	1	EA		C		366.00000			
				NOTE: HAND DIG TO EX. 3312-2 IN FRONT OF									

LOC 021 SHEET 01 |_| COMPLETED |_| PARTIALLY COMPLETED |_| ENERGIZED

AS-BUILT RECORDED BY: _____ DATE: _____ MATERIAL CHECK BY: _____ DATE: _____

8-96 (ADDENDUM NO. 2)

WORK ORDER: 2818650 PROJECT: 436323 JOB:01 REV:0 TYPE: UD NAME: E MISSION RD 20A T&C MUNI TRENCH STATUS: ACT

LOCATION: 021 SHEET: 02 DISTRICT: NE DESIGNED BY: MIKE VAN ZANDT PHONE: 291-1192 LOCATION 021 OF 033

WRK F-C-T	MU ID	AU ID	STOCK#	DESCRIPTION/CONSTRUCTION NOTES	QTY RQD	UM	ACT QTY	WRK RSP	MAT RSP	ACCOUNT	STNDRD PAGE	INST/APP BY	DATE
				WOMENS CLUB.									

WORK FUNC	FAC CODE	DESC	EXIST TAG	NEW TAG	CONSTRUCTION NOTES
					STANDARD SIDEWALK BREAK AND REPAIR

8-97 (Addendum No. 2)

LOC 021 SHEET 02 |_| COMPLETED |_| PARTIALLY COMPLETED |_| ENERGIZED

AS-BUILT RECORDED BY: _____ DATE: _____ MATERIAL CHECK BY: _____ DATE: _____

SAN DIEGO GAS AND ELECTRIC
DPSS - CONSTRUCTION ORDER - CUSTOMER COPY

WORK ORDER: 2818650 PROJECT: 436323 JOB:01 REV:0 TYPE: UD NAME: E MISSION RD 20A T&C MUNI TRENCH STATUS: ACT

LOCATION: 022 SHEET: 01 DISTRICT: NE DESIGNED BY: MIKE VAN ZANDT PHONE: 291-1192 LOCATION 022 OF 033

WRK F-C-T	MU ID	AU ID	STOCK#	DESCRIPTION/CONSTRUCTION NOTES	QTY RQD	UM	ACT QTY	WRK RSP	MAT RSP	ACCOUNT	STNDRD PAGE	INST/APP BY	DATE
I-N-S		3'HD-H		HAND DIG TRENCH 3 FT DEEP HARD	5	FT		C		366.00000	G7453		
I-N-S		REM-3'		TRENCH SPOIL 3 FT DEPTH	5	FT		C		366.00000			
			X30007	DUMPING FEE	2	CY			C				
I-N-S		SLR-12		BACKFILL SLURRY 12 IN WIDE X 12 IN DEEP	15	FT		C		366.00000	G7409		
			656400	SLURRY MIX, 1 SACK SAND	1	CY			C				
I-N-S		2EB3SL		2-3 IN EB CONDUIT SLURRY ENCASED	10	FT		C		366.00000	3376.1		
			249664	CONDUIT DB 3 IN 20 FT LENGTH	20	FT			C				
			656400	SLURRY MIX, 1 SACK SAND	1	CY			C				
				NOTE: 1 PRI, 1 SEC.									
I-N-S		2-3SLB		2-3 IN DB 90 D 36 IN R BEND SLURRY ENC	1	EA		C		366.00000	3373.2		
			322048	BEND CONDUIT DB 3 IN 90 D 36 IN R	2	EA			C				
			656400	SLURRY MIX, 1 SACK SAND	1	CY			C				

WORK FUNC	FAC CODE	DESC	EXIST TAG	NEW TAG

CONSTRUCTION NOTES

REMAINING TRENCH AND ST. REPAIR ON LOC 10.

8-98 (ADDENDUM NO. 2)

LOC 022 SHEET 01 |_| COMPLETED |_| PARTIALLY COMPLETED |_| ENERGIZED

AS-BUILT RECORDED BY: _____ DATE: _____ MATERIAL CHECK BY: _____ DATE: _____

WORK ORDER: 2818650 PROJECT: 436323 JOB:01 REV:0 TYPE: UD NAME: E MISSION RD 20A T&C MUNI TRENCH STATUS: ACT

LOCATION: 023 SHEET: 01 DISTRICT: NE DESIGNED BY: MIKE VAN ZANDT PHONE: 291-1192 LOCATION 023 OF 033

WRK F-C-T	MU ID	AU ID	STOCK#	DESCRIPTION/CONSTRUCTION NOTES	QTY RQD	UM	ACT QTY	WRK RSP	MAT RSP	ACCOUNT	STNDRD PAGE	INST/APP BY	DATE
				NO DESIGN UNITS FOR THIS LOCATION									

WORK FUNC	FAC CODE	DESC	EXIST TAG	NEW TAG	CONSTRUCTION NOTES
					REMOVE EX. CABLE AND ABANDON CONDUIT ON CABLE PHASE.

8-99 (ADDENDUM NO. 2)

LOC 023 SHEET 01 |_| COMPLETED |_| PARTIALLY COMPLETED |_| ENERGIZED

AS-BUILT RECORDED BY: _____ DATE: _____ MATERIAL CHECK BY: _____ DATE: _____

WORK ORDER: 2818650 PROJECT: 436323 JOB:01 REV:0 TYPE: UD NAME: E MISSION RD 20A T&C MUNI TRENCH STATUS: ACT

LOCATION: 024 SHEET: 01 DISTRICT: NE DESIGNED BY: MIKE VAN ZANDT PHONE: 291-1192 LOCATION 024 OF 033

WRK F-C-T	MU ID	AU ID	STOCK#	DESCRIPTION/CONSTRUCTION NOTES	QTY RQD	UM	ACT QTY	WRK RSP	MAT RSP	ACCOUNT	STNDRD PAGE	INST/APP BY	DATE
I-N-S	(EXPL)			3316 TC SLURRY BACKFILL INSTALL COMPLETE	1	EA		C			3316.3		
		AD-P-H		ADJUST HH TO GRADE (IN PKY OR NEW CONST)	1	EA				366.00000			
			248205	CONCRETE - 6 SACK (3/4" ROCK MIX)	1	CY			C				
		C/P16H		COLD PATCH AND CLEAN-UP 3316 HH	1	EA				366.00000			
			114200	ASPHALT (COLD PATCH)	2	TN			C				
		R/S16H		SPOIL FROM 3316 HH	1	EA				366.00000			
			X30007	DUMPING FEE	31	CY			C				
		SHOR-H		SHORING PRIMARY HANDHOLES	1	EA				366.00000			
			X30010	SHORING MATERIAL	39	EA			C				
		X16H-A		EXCAVATE 3316 HANDHOLE AVERAGE	1	EA				366.00000	3316.4		
			601600	ROCK, DRY, 3/8" RECYCLED MATLS PREFFERED	2	TN			C				
		16H-SL		BACKFILL SLURRY 3316 HH	1	EA				366.00000			
			248200	CONCRETE - 1 SACK (SAND MIX)	7	CY			C				
		3316TC		HANDHOLE 3316 WITH TRAFFIC COVER	1	EA				366.00000	3316		
			400312	3316 TRAFFIC COVER HANDHOLE COMPLETE	1	EA			C				
I-N-S		AS-1CT		ASPHALT 1 SAW CUT AND BREAK MECH	34	FT		C		366.00000			
I-N-S		AS-M24		ASPHALT BASE & TOP MECH 24 IN	34	FT		C		366.00000			
			X20022	GRIND ASPHALT (PER SF)	34	SF			C				
			114201	ASPHALT (BASE)	4	TN			C				
			114202	ASPHALT (TOP)	1	TN			C				
I-N-S		RED5-4		CONDUIT BELL REDUCER DB 5 IN TO 4 IN	7	EA		C		366.00000	3373.2		
			573384	CONDUIT BELL REDUCER 5 IN TO 4 IN	7	EA			C				
I-N-S		RED4-3		CONDUIT BELL REDUCER DB 4 IN TO 3 IN	6	EA		C		366.00000	3373.2		
			573380	CONDUIT BELL REDUCER 4 IN TO 3 IN	6	EA			C				

WORK FUNC	FAC CODE	DESC	EXIST TAG	NEW TAG	CONSTRUCTION NOTES
I	PH	PRI HANDHOLE		H120722	NO LOCATION CONSTRUCTION NOTES FOUND

8-100 (ADDENDUM NO. 2)

LOC 024 SHEET 01 |_| COMPLETED |_| PARTIALLY COMPLETED |_| ENERGIZED

AS-BUILT RECORDED BY: _____ DATE: _____ MATERIAL CHECK BY: _____ DATE: _____

WORK ORDER: 2818650 PROJECT: 436323 JOB:01 REV:0 TYPE: UD NAME: E MISSION RD 20A T&C MUNI TRENCH STATUS: ACT

LOCATION: 025 SHEET: 01 DISTRICT: NE DESIGNED BY: MIKE VAN ZANDT PHONE: 291-1192 LOCATION 025 OF 033

WRK F-C-T	MU ID	AU ID	STOCK#	DESCRIPTION/CONSTRUCTION NOTES	QTY RQD	UM	ACT QTY	WRK RSP	MAT RSP	ACCOUNT	STNDRD PAGE	INST/APP BY	DATE
I-N-S		1-3SLB		1-3 IN DB 90 D 36 IN R BEND SLURRY ENC	1	EA		C		366.00000	3373.2		
			322048	BEND CONDUIT DB 3 IN 90 D 36 IN R	1	EA			C				
			656400	SLURRY MIX, 1 SACK SAND	1	CY			C				
				NOTE: EXCAVATION ON LOC 21.									

WORK FUNC	FAC CODE	DESC	EXIST TAG	NEW TAG	CONSTRUCTION NOTES
					NO LOCATION CONSTRUCTION NOTES FOUND

8-101 (ADDENDUM NO. 2)

LOC 025 SHEET 01 |_| COMPLETED |_| PARTIALLY COMPLETED |_| ENERGIZED

AS-BUILT RECORDED BY: _____ DATE: _____ MATERIAL CHECK BY: _____ DATE: _____

WORK ORDER: 2818650 PROJECT: 436323 JOB:01 REV:0 TYPE: UD NAME: E MISSION RD 20A T&C MUNI TRENCH STATUS: ACT

LOCATION: 026 SHEET: 01 DISTRICT: NE DESIGNED BY: MIKE VAN ZANDT PHONE: 291-1192 LOCATION 026 OF 033

WRK F-C-T	MU ID	AU ID	STOCK#	DESCRIPTION/CONSTRUCTION NOTES	QTY RQD	UM	ACT QTY	WRK RSP	MAT RSP	ACCOUNT	STNDRD PAGE	INST/APP BY	DATE
I-N-S		AS-2CT		ASPHALT 2 SAW CUT AND BREAK MECH	200	FT		C		366.00000			
I-N-S		BH03XH		MACH DIG TRENCH 3 FT DEEP BACKHOE	200	FT		C		366.00000	G7453		
			X20201	TRAFFIC BEARING STEEL PLATE	150	EA			C				
			114215	ASPHALT, COLD MIX	2	TN			C				
I-N-S		REM-3'		TRENCH SPOIL 3 FT DEPTH	200	FT		C		366.00000			
			X30007	DUMPING FEE	50	CY			C				
I-N-S		TRN-DT		TRENCHING/BACKFILL (DUMP TRUCK ASSIST)	40	HR		C		366.00000			
I-N-S		SLR-12		BACKFILL SLURRY 12 IN WIDE X 12 IN DEEP	200	FT		C		366.00000	G7409		
			656400	SLURRY MIX, 1 SACK SAND	8	CY			C				
I-N-S		AT-H12		ASPHALT TOP MANUAL 12 IN	200	FT		C		366.00000			
			114202	ASPHALT (TOP)	4	TN			C				
I-N-S		AB-M12		ASPHALT BASE MECH 12 IN	200	FT		C		366.00000			
			114201	ASPHALT (BASE)	15	TN			C				
I-N-S		LN-S/U		LANE CLOSURE URBAN STREET	2	EA		C		366.00000			
I-N-S		XING-U		TRAFFIC CONDITIONS (STREET CROSSINGS)	60	FT		C		366.00000			
			114215	ASPHALT, COLD MIX	1	TN			C				
I-N-S		LN/S/S		LANE CLOSURE URBAN ST (STREET REPAIR)	2	EA		C		366.00000			
I-N-S		XING/S		TRAFFIC COND. (XING LANE) STREET REPAIR	60	FT		C		366.00000			
I-N-S		2DB5SL		2-5 IN DB CONDUIT SLURRY ENCASED	150	FT		C		366.00000	3376.1		
			249728	CONDUIT DB 5 IN 20 FT LENGTH	300	FT			C				
			656400	SLURRY MIX, 1 SACK SAND	5	CY			C				
I-N-S		2-5SLS		2-5 IN DB 22.5 D 25 FT R SLURRY ENCASED	5	EA		C		366.00000	3373.2		
			321856	BEND CONDUIT DB 5 IN 22.5 D 25 FT R	10	EA			C				
			656400	SLURRY MIX, 1 SACK SAND	2	CY			C				

WORK FUNC	FAC CODE	DESC	EXIST TAG	NEW TAG

CONSTRUCTION NOTES

NO LOCATION CONSTRUCTION NOTES FOUND

LOC 026 SHEET 01 [ ] COMPLETED [ ] PARTIALLY COMPLETED [ ] ENERGIZED

AS-BUILT RECORDED BY: _____ DATE: _____ MATERIAL CHECK BY: _____ DATE: _____

8-102 (ADDENDUM NO. 2)

WORK ORDER: 2818650 PROJECT: 436323 JOB:01 REV:0 TYPE: UD NAME: E MISSION RD 20A T&C MUNI TRENCH STATUS: ACT

LOCATION: 027 SHEET: 01 DISTRICT: NE DESIGNED BY: MIKE VAN ZANDT PHONE: 291-1192 LOCATION 027 OF 033

WRK F-C-T	MU ID	AU ID	STOCK#	DESCRIPTION/CONSTRUCTION NOTES	QTY RQD	UM	ACT QTY	WRK RSP	MAT RSP	ACCOUNT	STNDRD PAGE	INST/APP BY	DATE
I-N-S		5"CP-B		CP BEND SCH 80 5 IN (SLURRY ENC)	2	EA		C		366.00000	4204.3		
			322488	ELBOW 5 IN-48 IN R 90 D PVC SCH 80	2	EA			C				
			656400	SLURRY MIX, 1 SACK SAND	1	CY			C				
I-N-S		CAP-05		CONDUIT END CAP 5 IN	2	EA		C		366.00000	3373.2		
			203392	CONDUIT END CAP 5 IN	2	EA			C				
I-N-S		HAND-D		HAND DIG TO POLE OR EQUIPMENT	1	EA		C		366.00000			

WORK FUNC	FAC CODE	DESC	EXIST TAG	NEW TAG	CONSTRUCTION NOTES
			P192069		STANDARD SIDEWALK BREAK AND REPAIR

8-103 (ADDENDUM NO. 2)

LOC 027 SHEET 01 |_| COMPLETED |_| PARTIALLY COMPLETED |_| ENERGIZED

AS-BUILT RECORDED BY: _____ DATE: _____ MATERIAL CHECK BY: _____ DATE: _____

WORK ORDER: 2818650 PROJECT: 436323 JOB:01 REV:0 TYPE: UD NAME: E MISSION RD 20A T&C MUNI TRENCH STATUS: ACT

LOCATION: 028 SHEET: 01 DISTRICT: NE DESIGNED BY: MIKE VAN ZANDT PHONE: 291-1192 LOCATION 028 OF 033

WRK F-C-T	MU ID	AU ID	STOCK#	DESCRIPTION/CONSTRUCTION NOTES	QTY RQD	UM	ACT QTY	WRK RSP	MAT RSP	ACCOUNT	STNDRD PAGE	INST/APP BY	DATE
I-N-S		3421-1		PAD 3421 1-PHASE TRANSFORMER	1	EA		C		366.00000	3421.1		
			514240	PAD 1-PHASE XFMR / 3-PHASE F.C. 3421	1	EA			C				
I-N-S		X-XF1P		PAD PREP 3421 PAD (1-PHASE TRANSFORMER)	1	EA		C		366.00000			
I-N-S		1-3SLB		1-3 IN DB 90 D 36 IN R BEND SLURRY ENC	3	EA		C		366.00000	3373.2		
			322048	BEND CONDUIT DB 3 IN 90 D 36 IN R	3	EA			C				
			656400	SLURRY MIX, 1 SACK SAND	1	CY			C				
				NOTE: 1 PRI, 2 SEC.									
I-N-S		1-2SLB		1-2 IN DB 90 D 36 IN R BEND SLURRY ENC	2	EA		C		366.00000	3373.2		
			321812	BEND CONDUIT DB 2 IN 90 D 36 IN R	2	EA			C				
			656400	SLURRY MIX, 1 SACK SAND	1	CY			C				
				NOTE: 2 SEC.									
I-N-S		TG-E-W		TRENCH GRD WIRE W/O RODS (EQUIP/SWI/HH)	1	EA		C		367.10000	4510.1		
			812816	WIRE BARE COPPER #2-7 STR SOFT DRAWN	8	LB			C				

WORK FUNC	FAC CODE	DESC	EXIST TAG	NEW TAG
I	PD	PAD		D154170

CONSTRUCTION NOTES

NOTE: BARRIER POSTS MAY BE NEEDED
ELIMINATION OF THIS REQUIREMENT BASED ON CURB/GUTTER/SIDEWALK
LOCATED DIRECTLY IN FRONT MAKES THIS AREA NON-TRAFFIC
IF THE AREA BECOMES DRIVEABLE THEN BP'S WILL BE NEEDED

8-104 (ADDENDUM NO. 2)

LOC 028 SHEET 01 |_| COMPLETED |_| PARTIALLY COMPLETED |_| ENERGIZED

AS-BUILT RECORDED BY: _____ DATE: _____ MATERIAL CHECK BY: _____ DATE: _____

WORK ORDER: 2818650 PROJECT: 436323 JOB:01 REV:0 TYPE: UD NAME: E MISSION RD 20A T&C MUNI TRENCH STATUS: ACT

LOCATION: 029 SHEET: 01 DISTRICT: NE DESIGNED BY: MIKE VAN ZANDT PHONE: 291-1192 LOCATION 029 OF 033

WRK F-C-T	MU ID	AU ID	STOCK#	DESCRIPTION/CONSTRUCTION NOTES	QTY RQD	UM	ACT QTY	WRK RSP	MAT RSP	ACCOUNT	STNDRD PAGE	INST/APP BY	DATE
I-N-S		AS-2CT		ASPHALT 2 SAW CUT AND BREAK MECH	10	FT		C		366.00000			
I-N-S		3'HD-H		HAND DIG TRENCH 3 FT DEEP HARD	10	FT		C		366.00000	G7453		
I-N-S		REM-3'		TRENCH SPOIL 3 FT DEPTH	10	FT		C		366.00000			
			X30007	DUMPING FEE	3	CY			C				
I-N-S		SHD-12		SHADE TRENCH WITH SAND - 12 INCH WIDTH	10	FT		C		366.00000	G7405		
			611492	SAND, FILL RECYCLED MATLS PREFFERED	1	TN			C				
I-N-S		DG--12		BACKFILL DG 12 IN WIDE X 12 IN DEEP	20	FT		C		366.00000	G7409		
			388702	DECOMP GRANITE RECYCLE MEETING GRN BOOK	2	TN			C				
I-N-S		1DB2-S		1-2 IN DB CONDUIT SEC	10	FT		C		366.00000	3373.1		
			249632	CONDUIT DB 2 IN 20 FT LENGTH	10	FT			C				
				NOTE: SERVICE TO 116									
I-N-S		1DB2SB		1-2 IN DB 90 D 24 IN R BEND SEC	1	EA		C		366.00000	3373.2		
			321984	BEND CONDUIT DB 2 IN 90 D 24 IN R	1	EA			C				
I-N-S		AS-H12		ASPHALT BASE & TOP MANUAL 12 IN	10	FT		C		366.00000			
			X20022	GRIND ASPHALT (PER SF)	50	SF			C				
			114201	ASPHALT (BASE)	1	TN			C				
			114202	ASPHALT (TOP)	1	TN			C				

WORK FUNC | FAC CODE | DESC | EXIST TAG | NEW TAG

CONSTRUCTION NOTES

NO LOCATION CONSTRUCTION NOTES FOUND

8-105 (ADDENDUM NO. 2)

LOC 029 SHEET 01 |_| COMPLETED |_| PARTIALLY COMPLETED |_| ENERGIZED

AS-BUILT RECORDED BY: _____ DATE: _____ MATERIAL CHECK BY: _____ DATE: _____

WORK ORDER: 2818650 PROJECT: 436323 JOB:01 REV:0 TYPE: UD NAME: E MISSION RD 20A T&C MUNI TRENCH STATUS: ACT

LOCATION: 030 SHEET: 01 DISTRICT: NE DESIGNED BY: MIKE VAN ZANDT PHONE: 291-1192 LOCATION 030 OF 033

WRK F-C-T	MU ID	AU ID	STOCK#	DESCRIPTION/CONSTRUCTION NOTES	QTY RQD	UM	ACT QTY	WRK RSP	MAT RSP	ACCOUNT	STNDRD PAGE	INST/APP BY	DATE
I-N-S		AS-2CT		ASPHALT 2 SAW CUT AND BREAK MECH	32	FT		C		366.00000			
I-N-S		3'HD-H		HAND DIG TRENCH 3 FT DEEP HARD	32	FT		C		366.00000	G7453		
I-N-S		REM-3'		TRENCH SPOIL 3 FT DEPTH	32	FT		C		366.00000			
			X30007	DUMPING FEE	8	CY			C				
I-N-S		SHD-12		SHADE TRENCH WITH SAND - 12 INCH WIDTH	32	FT		C		366.00000	G7405		
			611492	SAND, FILL RECYCLED MATLS PREFFERED	2	TN			C				
I-N-S		DG--12		BACKFILL DG 12 IN WIDE X 12 IN DEEP	64	FT		C		366.00000	G7409		
			388702	DECOMP GRANITE RECYCLE MEETING GRN BOOK	4	TN			C				
I-N-S		1DB2-S		1-2 IN DB CONDUIT SEC	32	FT		C		366.00000	3373.1		
			249632	CONDUIT DB 2 IN 20 FT LENGTH	32	FT			C				
				NOTE: SERVICE TO 112									
I-N-S		AS-H12		ASPHALT BASE & TOP MANUAL 12 IN	32	FT		C		366.00000			
			X20022	GRIND ASPHALT (PER SF)	160	SF			C				
			114201	ASPHALT (BASE)	3	TN			C				
			114202	ASPHALT (TOP)	1	TN			C				

WORK FUNC	FAC CODE	DESC	EXIST TAG	NEW TAG

CONSTRUCTION NOTES

NO LOCATION CONSTRUCTION NOTES FOUND

8-106 (Addendum No. 2)

LOC 030 SHEET 01 |_| COMPLETED |_| PARTIALLY COMPLETED |_| ENERGIZED

AS-BUILT RECORDED BY: _____ DATE: _____ MATERIAL CHECK BY: _____ DATE: _____

WORK ORDER: 2818650 PROJECT: 436323 JOB:01 REV:0 TYPE: UD NAME: E MISSION RD 20A T&C MUNI TRENCH STATUS: ACT

LOCATION: 031 SHEET: 01 DISTRICT: NE DESIGNED BY: MIKE VAN ZANDT PHONE: 291-1192 LOCATION 031 OF 033

WRK F-C-T	MU ID	AU ID	STOCK#	DESCRIPTION/CONSTRUCTION NOTES	QTY RQD	UM	ACT QTY	WRK RSP	MAT RSP	ACCOUNT	STNDRD PAGE	INST/APP BY	DATE
I-N-S		BH03XH		MACH DIG TRENCH 3 FT DEEP BACKHOE	55	FT		C		366.00000	G7453		
			X20201	TRAFFIC BEARING STEEL PLATE	42	EA			C				
			114215	ASPHALT, COLD MIX	1	TN			C				
I-N-S		REM-3'		TRENCH SPOIL 3 FT DEPTH	55	FT		C		366.00000			
			X30007	DUMPING FEE	14	CY			C				
I-N-S		SLR-12		BACKFILL SLURRY 12 IN WIDE X 12 IN DEEP	110	FT		C		366.00000	G7409		
			656400	SLURRY MIX, 1 SACK SAND	5	CY			C				
I-N-S		2EB2SL		2-2 IN EB CONDUIT SLURRY ENCASED	55	FT		C		366.00000	3376.1		
			249632	CONDUIT DB 2 IN 20 FT LENGTH	110	FT			C				
			656400	SLURRY MIX, 1 SACK SAND	3	CY			C				
I-N-S		CAP-02		CONDUIT END CAP 2 IN	2	EA		C		366.00000	3373.2		
			203296	CONDUIT END CAP 2 IN	2	EA			C				
I-N-S		STUB/M		STUB MARKER FOR UNDERGROUND CONDUIT	1	EA		C		366.00000	3377.1		
			476302	MARKER CONDUIT STUB RED	1	EA			C				
			476494	MARKER, BALL, E.F.M.S	1	EA			C				
			809200	WIRE TRACER 14AWG 600V CU SOLID INSULATE	6	FT			C	EXEMPT			

WORK FUNC	FAC CODE	DESC	EXIST TAG	NEW TAG	CONSTRUCTION NOTES
					CAP SPARE CONDUITS AFTER MANDRELLING.

8-107 (ADDENDUM NO. 2)

LOC 031 SHEET 01 |_| COMPLETED |_| PARTIALLY COMPLETED |_| ENERGIZED

AS-BUILT RECORDED BY: _____ DATE: _____ MATERIAL CHECK BY: _____ DATE: _____

WORK ORDER: 2818650 PROJECT: 436323 JOB:01 REV:0 TYPE: UD NAME: E MISSION RD 20A T&C MUNI TRENCH STATUS: ACT

LOCATION: 032 SHEET: 01 DISTRICT: NE DESIGNED BY: MIKE VAN ZANDT PHONE: 291-1192 LOCATION 032 OF 033

WRK F-C-T	MU ID	AU ID	STOCK#	DESCRIPTION/CONSTRUCTION NOTES	QTY RQD	UM	ACT QTY	WRK RSP	MAT RSP	ACCOUNT	STNDRD PAGE	INST/APP BY	DATE
I-N-S		AS-2CT		ASPHALT 2 SAW CUT AND BREAK MECH	60	FT		C		366.00000			
I-N-S		BH03XH		MACH DIG TRENCH 3 FT DEEP BACKHOE	60	FT		C		366.00000	G7453		
			X20201	TRAFFIC BEARING STEEL PLATE	45	EA			C				
			114215	ASPHALT, COLD MIX	1	TN			C				
I-N-S		REM-3'		TRENCH SPOIL 3 FT DEPTH	60	FT		C		366.00000			
			X30007	DUMPING FEE	15	CY			C				
I-N-S		SLR-18		BACKFILL SLURRY 18 IN WIDE X 12 IN DEEP	120	FT		C		366.00000	G7409		
			656400	SLURRY MIX, 1 SACK SAND	7	CY			C				
I-N-S		AT-M18		ASPHALT TOP MECH 18 IN	60	FT		C		366.00000			
			114202	ASPHALT (TOP)	2	TN			C				
I-N-S		AB-M18		ASPHALT BASE MECH 18 IN	60	FT		C		366.00000			
			114201	ASPHALT (BASE)	7	TN			C				
I-N-S		SAW-CC		SAW CUT CONCRETE	15	FT		C		366.00000			
I-N-S		SW-BRK		BREAK SIDEWALK (5X5) MANUALLY	3	EA		C		366.00000			
I-N-S		CC-WLK		CONCRETE SIDEWALK SECTION (5X5) FINISHED	3	EA		C		366.00000			
			248205	CONCRETE - 6 SACK (3/4" ROCK MIX)	2	CY			C				
I-N-S		2EB3SL		2-3 IN EB CONDUIT SLURRY ENCASED	55	FT		C		366.00000	3376.1		
			249664	CONDUIT DB 3 IN 20 FT LENGTH	110	FT			C				
			656400	SLURRY MIX, 1 SACK SAND	3	CY			C				
I-N-S		2-3SLS		2-3 IN DB 22.5 D 25 FT R SLURRY ENCASED	1	EA		C		366.00000	3373.2		
			322144	BEND CONDUIT DB 3 IN 22.5 D 25 FT R	2	EA			C				
			656400	SLURRY MIX, 1 SACK SAND	1	CY			C				
I-N-S		2-3SLB		2-3 IN DB 90 D 36 IN R BEND SLURRY ENC	1	EA		C		366.00000	3373.2		
			322048	BEND CONDUIT DB 3 IN 90 D 36 IN R	2	EA			C				
			656400	SLURRY MIX, 1 SACK SAND	1	CY			C				
I-N-S		LN-S/U		LANE CLOSURE URBAN STREET	1	EA		C		366.00000			
I-N-S		LN/S/S		LANE CLOSURE URBAN ST (STREET REPAIR)	1	EA		C		366.00000			
I-N-S		XING-U		TRAFFIC CONDITIONS (STREET CROSSINGS)	60	FT		C		366.00000			
			114215	ASPHALT, COLD MIX	1	TN			C				
I-N-S		XING/S		TRAFFIC COND. (XING LANE) STREET REPAIR	60	FT		C		366.00000			

LOC 032 SHEET 01 |_| COMPLETED |_| PARTIALLY COMPLETED |_| ENERGIZED

AS-BUILT RECORDED BY: _____ DATE: _____ MATERIAL CHECK BY: _____ DATE: _____

8-108 (Addendum No. 2)

WORK ORDER: 2818650 PROJECT: 436323 JOB:01 REV:0 TYPE: UD NAME: E MISSION RD 20A T&C MUNI TRENCH STATUS: ACT

LOCATION: 032 SHEET: 02 DISTRICT: NE DESIGNED BY: MIKE VAN ZANDT PHONE: 291-1192 LOCATION 032 OF 033

WORK FUNC	FAC CODE	DESC	EXIST	TAG	NEW	TAG	CONSTRUCTION NOTES
							NO LOCATION CONSTRUCTION NOTES FOUND

8-109 (ADDENDUM NO. 2)

LOC 032 SHEET 02 |_| COMPLETED |_| PARTIALLY COMPLETED |_| ENERGIZED

AS-BUILT RECORDED BY: _____ DATE: _____ MATERIAL CHECK BY: _____ DATE: _____

WORK ORDER: 2818650 PROJECT: 436323 JOB:01 REV:0 TYPE: UD NAME: E MISSION RD 20A T&C MUNI TRENCH STATUS: ACT

LOCATION: 033 SHEET: 01 DISTRICT: NE DESIGNED BY: MIKE VAN ZANDT PHONE: 291-1192 LOCATION 033 OF 033

WRK F-C-T	MU ID	AU ID	STOCK#	DESCRIPTION/CONSTRUCTION NOTES	QTY RQD	UM	ACT QTY	WRK RSP	MAT RSP	ACCOUNT	STNDRD PAGE	INST/APP BY	DATE
I-N-S		FC3PAD		PAD 3421 W/HH 3-PHASE FUSE CABINET	1	EA		C		366.00000	3421.1		
			162426	HANDHOLE BODY 17 IN X 30 IN X 12 IN 3312	1	EA			C				
			514240	PAD 1-PHASE XFMR / 3-PHASE F.C. 3421	1	EA			C				
I-N-S		XFC-3P		EXCAVATE 3421 PAD W/HH (3-PHASE F.C.)	1	EA		C		366.00000	3421.2		
I-N-S		1-3SLB		1-3 IN DB 90 D 36 IN R BEND SLURRY ENC	2	EA		C		366.00000	3373.2		
			322048	BEND CONDUIT DB 3 IN 90 D 36 IN R	2	EA			C				
			656400	SLURRY MIX, 1 SACK SAND	1	CY			C				
I-N-S		PLANTU		REMOVE/REPLACE LANDSCAPING	5	FT		C		366.00000			
I-N-S		LN-S/U		LANE CLOSURE URBAN STREET	1	EA		C		366.00000			
I-N-S		TG-E-W		TRENCH GRD WIRE W/O RODS (EQUIP/SWI/HH)	1	EA		C		367.10000	4510.1		
			812816	WIRE BARE COPPER #2-7 STR SOFT DRAWN	8	LB			C				

WORK FUNC	FAC CODE	DESC	EXIST TAG	NEW TAG	CONSTRUCTION NOTES
I	PD	PAD		D201734	NO LOCATION CONSTRUCTION NOTES FOUND

8-110 (ADDENDUM NO. 2)

LOC 033 SHEET 01 |_| COMPLETED |_| PARTIALLY COMPLETED |_| ENERGIZED

AS-BUILT RECORDED BY: _____ DATE: _____ MATERIAL CHECK BY: _____ DATE: _____

SCOPE: THIS STANDARD SHOWS THE PAD AND INSTALLATION REQUIREMENTS FOR THE ALLOWABLE CONDUIT COMBINATIONS AND CONFIGURATIONS FOR A SINGLE-PHASE TRANSFORMER, THREE-PHASE FUSE CABINET, SINGLE-PHASE FUSE CABINET AND SINGLE-PHASE CABLE TERMINATOR.

PAD
WEIGHT: 619# MAX.

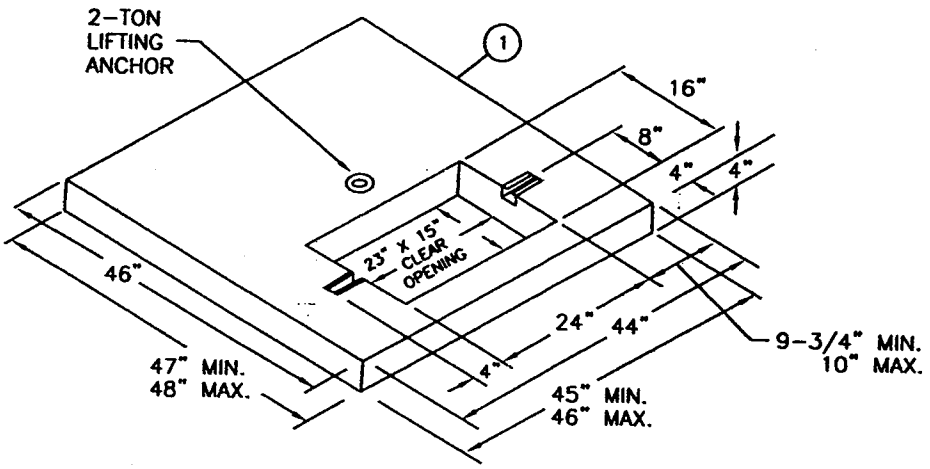

3312 HANDHOLE

WEIGHT: 185" MAX.

(REQUIRED FOR THREE-PHASE FUSE CABINET, SINGLE-PHASE FUSE CABINET AND SINGLE-PHASE CABLE TERMINATOR

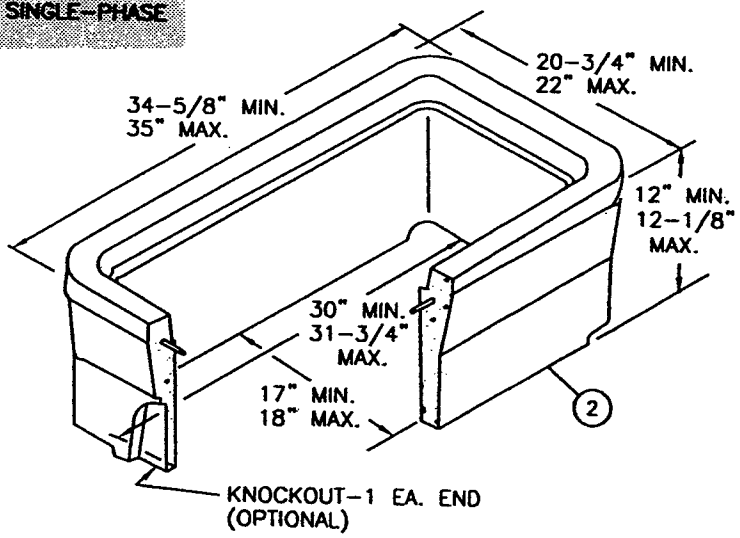

SERVICE GUIDE	X Indicates Latest Revision	Completely Revised	New Page	Information Removed
REVISION	SDG&E ELECTRIC STANDARDS			
DATE 1-1-2000 APPD BJT/VCR	SINGLE-PHASE TRANSFORMER/UTILITY EQUIPMENT PAD			3421.1

8-111 (ADDENDUM NO. 2)

3711, 3712 SINGLE-PHASE TRANSFORMER

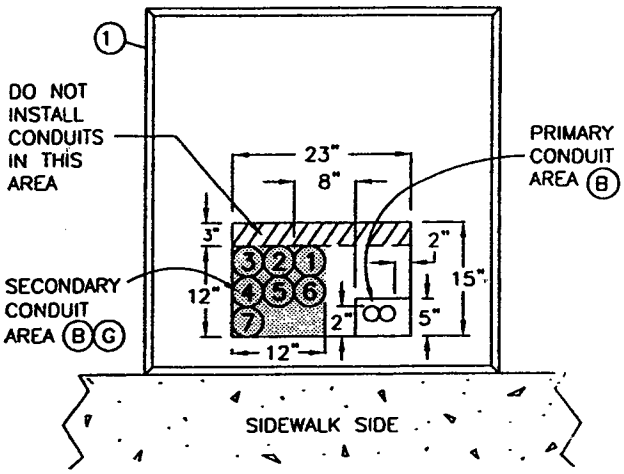

3513 THREE-PHASE FUSED SWITCHING CABINET INSTALLATION (TOP VIEW)

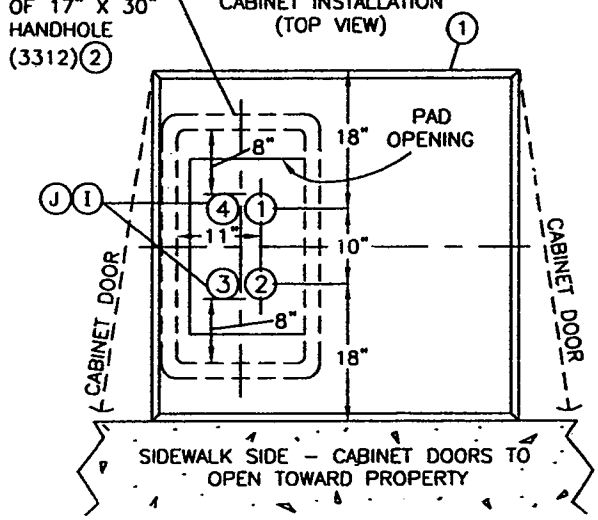

3512 INSTALLATION (TOP VIEW) SINGLE-PHASE FUSED SWITCHING CABINET

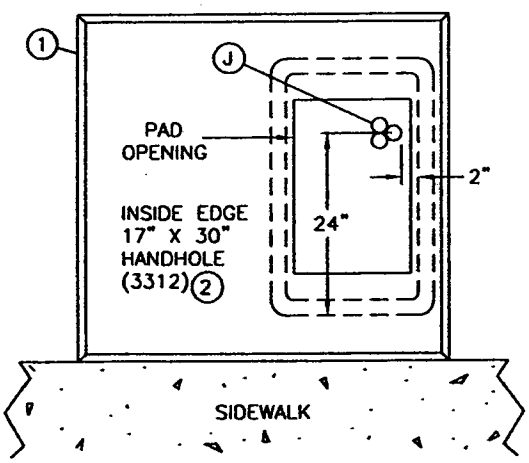

3522 INSTALLATION (TOP VIEW) SINGLE-PHASE CABLE TERMINATOR

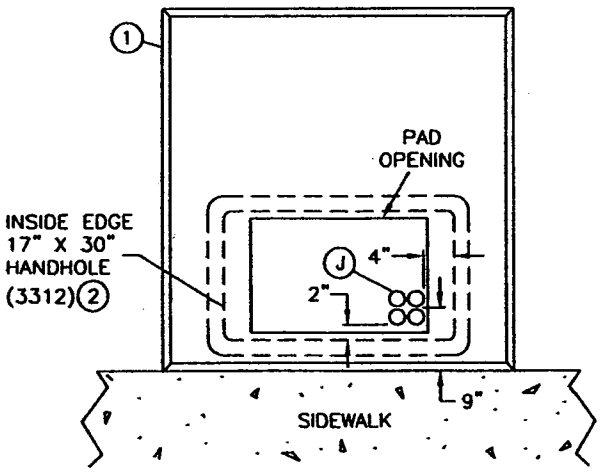

SERVICE GUIDE	X Indicates Latest Revision	Completely Revised	New Page	Information Removed

3421.2	SDG&E ELECTRIC STANDARDS SINGLE-PHASE TRANSFORMER/UTILITY EQUIPMENT PAD	REVISION DATE 1-1-2000 APPD RWJ/VCR

8-112 (ADDENDUM NO. 2)

NOTES:

- TRANSFORMER COOLING FINS MAY OVERHANG REAR OF PAD BY 6 INCHES.
- FIVE INCH CONDUIT NOT ALLOWED IN THESE INSTALLATIONS.
- PAD MAY NOT BE POURED-IN-PLACE.

BILL OF MATERIAL:

ITEM	DESCRIPTION	QUANTITY	CONST STD. OR PAGE NO.	STOCK NUMBER	ASSEMBLY UNIT	
1	PAD, SINGLE-PHASE TRANSFORMER/UTILITY EQUIPMENT PAD	1	3421	514240	3421-1	PAD WITH 3312 HANDHOLE
2	BODY, HANDHOLE	1	3312	162426	3312-1	FC3PAD

INSTALLATION (FOR SINGLE-PHASE TRANSFORMER):

A. SET PAD LEVEL TO FINAL GRADE AND INSTALL EQUIPMENT GROUND.

(B) PLACE ALL PRIMARY AND SECONDARY CONDUITS WITHIN THE PAD OPENING AS SHOWN ABOVE. DO NOT CUT INTO THE CURVED PORTION ON THE ELBOWS. RADIUS OF CURVATURE IS 36" MINIMUM FOR 3 INCH AND 4 INCH CONDUITS. PLACE ALL CONDUIT WITH 3/0 OR LARGER CABLE TOWARDS THE REAR OF THE 12 INCH SECONDARY AREA.

(C) THE CONDUIT CONFIGURATION REQUIREMENT BETWEEN TERMINATING POINTS LIMITS THE SECONDARY CONDUIT CONFIGURATION TO 2 WIDE X 4 DEEP OR 4 WIDE X 2 DEEP (NO ONE CONDUIT IS TO BE COMPLETELY SURROUNDED ON ALL FOUR SIDES BY OTHER CONDUITS), USING SPACERS AND 1 SACK CONCRETE SLURRY BACKFILL. CONDUITS MAY ALSO BE INSTALLED SIDE BY SIDE ON THE BOTTOM OF THE TRENCH WITHOUT SPACERS OR CONCRETE SLURRY (4 CONDUITS MAX.). IN THE TRANSITION AREA WHERE THE CONDUITS FROM THE BOTTOM OF THE TRENCH START TOWARD THE SURFACE (THE STRAIGHT PORTION BY THE 90° BEND), SPACERS MAY BE REQUIRED TO ALLOW THE 90° BENDS TO ENTER STRAIGHT INTO THE PAD OPENING. AT THE SURFACE POINT, THE CONDUITS MAY BE BUNDLED TOGETHER. USE SDG&E APPROVED BASE, SHADING AND BACKFILL.

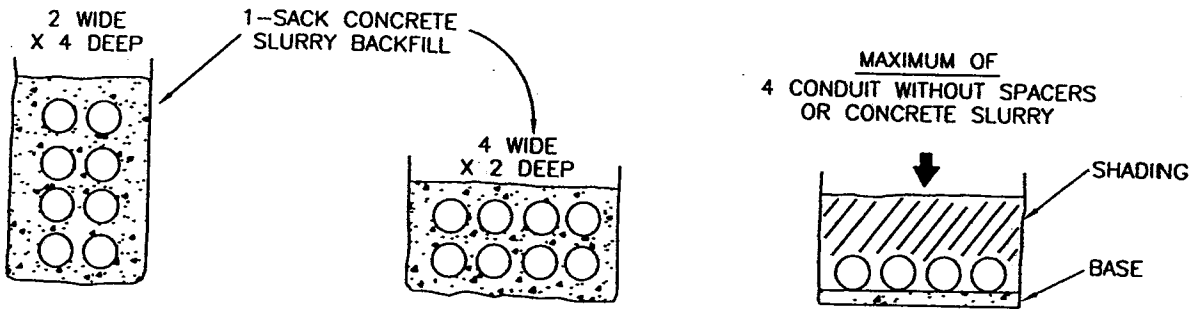

SERVICE GUIDE	Indicates Latest Revision	Completely Revised	New Page	Information Removed
REVISION	SDG&E ELECTRIC STANDARDS			
DATE 1-1-96 APPD	SINGLE-PHASE TRANSFORMER/ UTILITY EQUIPMENT PAD			3421.3

8-113 (ADDENDUM NO. 2)

D. THE PRIMARY AND SECONDARY CONDUIT COMBINATIONS ALLOWED ARE SHOWN IN THE CHART BELOW. READ DOWN DESIRED COLUMN UNTIL THE NUMBER OF RUNS BEING INSTALLED ARE LOCATED, THEN READ ACROSS THE ROW CHECKING FOR ADDITIONAL ALLOWABLE RUNS. THE SUM OF THE COLUMNS SHALL NOT EXCEED THE TOTAL CONDUITS ALLOWED.

SECONDARY CONDUIT COMBINATIONS			
2" (EB OR DB)	3" (EB OR DB)	4" (EB OR DB)	TOTAL CONDUITS ALLOWED *
–	5	–	5
4	3	–	7
5	2	–	7
6	1	–	7
7	–	–	7
1	–	4	5
–	1	4	5
1	1	3	5
–	3	2	5
–	4	1	5
4	–	3	7
5	–	2	7
6	–	1	7

PRIMARY CONDUIT COMBINATIONS		
2" (EB OR DB)	3" (EB OR DB)	TOTAL CONDUITS ALLOWED **
4	–	4
2	2	4
2	1	3
1	2	3
2	–	2
–	2	2
1	–	1
–	1	1

* SECONDARY CONDUITS MAY INCLUDE TWO ADDITIONAL ONE INCH CONDUITS FOR STREET LIGHTS.

** 1-4 OR 1-5 INCH PRIMARY CONDUIT IS ALLOWED WHEN THE CONDUIT IS EXTENED FROM AN EXISTING STUBOUT.

E. TERMINATE PRIMARY AND SECONDARY CONDUITS FLUSH WITH TOP OF PAD.

(F) WHEN THE NUMBER OF REQUIRED CONDUITS IS LESS THAN THE TOTAL CONDUITS ALLOWED IN THE TABLE, INSTALL CONDUITS IN NUMBERED SEQUENCE AS SHOWN ON 3421.2.

G. IN SOFT SOILS, A CONCRETE BACKFILL (1-SACK MIX) 12 INCHES BEYOND THE SIDE EDGES OF THE PAD AND 12 INCHES DEEP IS REQUIRED UNDER THE TRANSFORMER PAD.

INSTALLATION (FOR THREE-PHASE FUSE CABINET)

H. SET PAD LEVEL TO FINAL GRADE AND INSTALL EQUIPMENT GROUND. TERMINATE CONDUITS 3 INCHES ABOVE BOTTOM OF HANDHOLE. INSTALL CONDUITS.

(I) THE MAXIMUM PRIMARY CONDUITS ALLOWED ARE ULTIMATE 4 RUNS OF 4" CONDUIT. AS SHOWN ON PG. 3421.2.

INSTALLATION (FOR SINGLE-PHASE FUSE SWITCHING CABINET AND SINGLE-PHASE TERMINATOR)

(J) SET PAD LEVEL TO FINAL GRADE AND INSTALL EQUIPMENT GROUND. TERMINATE CONDUITS 3 INCHES ABOVE BOTTOM OF HANDHOLE. INSTALL CONDUITS AS SHOWN ON PG. 3421.2.

INSTALL CONDUITS #1 & 2 WHENEVER THERE IS JUST ONE LINE & ONE LOAD CABLE. INSTALL CONDUITS #3 & OR #4 FOR THE SECOND LOAD OR LINE CABLE (SEE STANDARD 3513 FOR CABLE INSTALLATION ON FUSE CABINET).

REFERENCE:

M. SEE STANDARD 3211 FOR PAD IDENTIFICATION.

N. SEE STANDARD 3370 OR 3371 FOR TRENCH, UTILITY POSITIONING, SHADING AND BACKFILL REQUIREMENTS.

O. SEE STANDARD 3376 FOR CONCRETE SLURRY, SHADING AND TYPE OF CONDUIT.

P. SEE STANDARD 3481 FOR BARRIER PROTECTION AND CLEARANCE.

Q. SEE STANDARD 3486 FOR SINGLE-PHASE TRANSFORMER LOCATIONS NEXT TO CATV AND/OR TELCO.

R. SEE STANDARD 3483 FOR MINIMUM OPERATING AND CLEARANCE REQUIREMENTS (PAD PLACEMENT).

S. SEE STANDARD 3484 FOR PAD INSTALLATION OF PAD-MOUNTED EQUIPMENT.

T. SEE STANDARD 3486 FOR RETAINING WALL REQUIREMENTS AND CLEARANCES FROM REVERSE SUBGRADE RETAINING WALLS.

U. SEE STANDARD 3485 AND 3487 FOR RETAINING WALLS.

V. SEE STANDARD 3512 FOR SINGLE-PHASE FUSED SWITCHING CABINET.

W. SEE STANDARD 3522 FOR SINGLE-PHASE TERMINATOR INSTALLATION.

X. SEE STANDARDS 3711, 3712 AND 3713 FOR TRANSFORMER INSTALLATIONS.

Y. SEE STANDARD 4512 FOR EQUIPMENT GROUNDING.

Z. SEE STANDARD 4514 FOR GROUNDING TELCO CONDUCTOR IN PAD-MOUNTED EQUIPMENT.

SCOPE: THIS STANDARD SHOWS THE (PREFERRED I) TRENCH GROUND WIRE INSTALLATION USED TO PROVIDE GROUNDING. THIS METHOD SHALL BE USED WHEN THE SAME PARTY IS RESPONSIBLE FOR THE CONDUIT AND PAD INSTALLATION AND WHEN A SYSTEM NEUTRAL FROM A SUBSTATION OR GROUNDING BANK IS PRESENT. USE ALTERNATE TRENCH GROUND WIRE METHOD PAGE 4510.2 WHEN A SYSTEM NEUTRAL IS NOT PRESENT. (G)

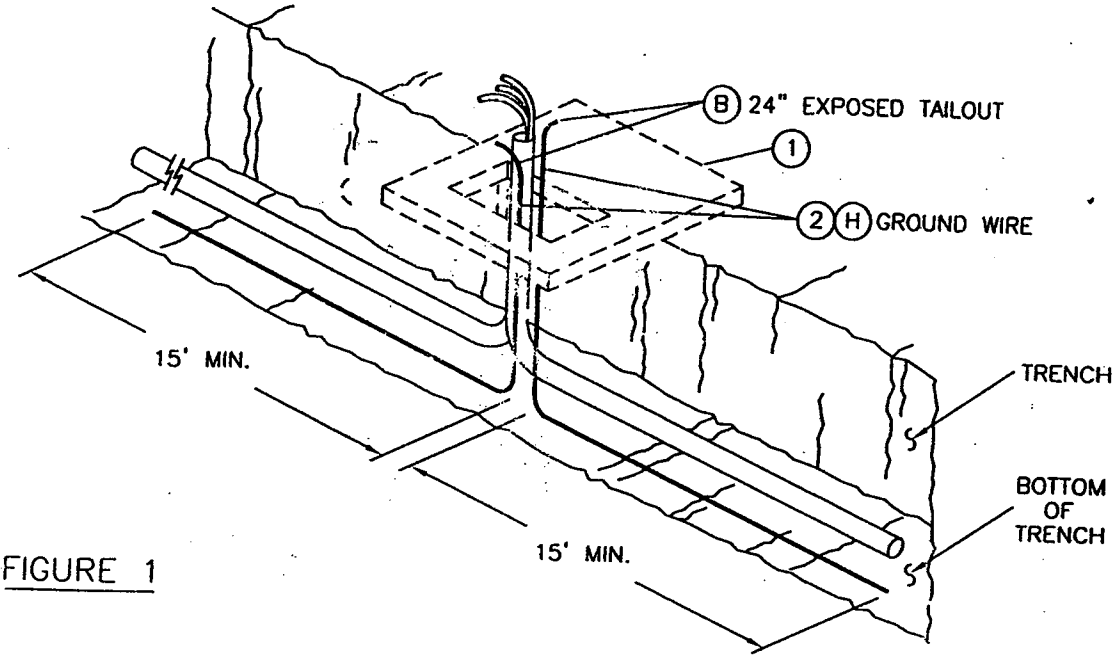

FIGURE 1

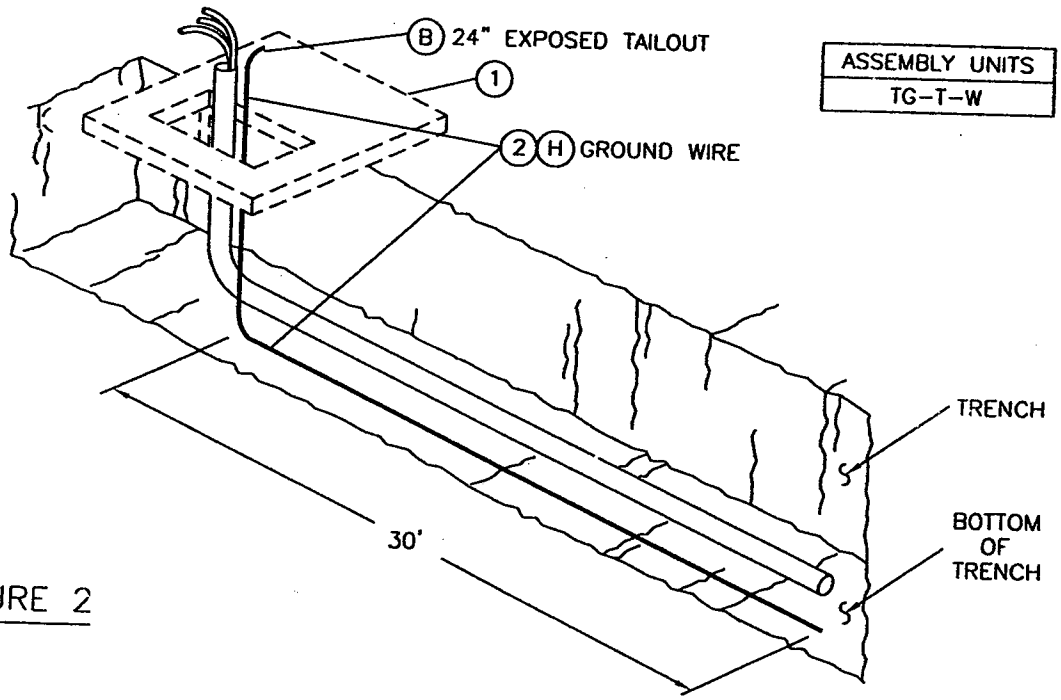

ASSEMBLY UNITS
TG-T-W

FIGURE 2

SERVICE GUIDE	Indicates Latest Revision	Completely Revised	New Page	Information Removed
REVISION	SDG&E ELECTRIC STANDARDS			
DATE 1-1-96 APPD	TRENCH GROUND WIRE (PREFERRED I)			4510.1

8-116 (ADDENDUM NO. 2)

SCOPE: THIS STANDARD SHOWS THE ALTERNATE TRENCH GROUND WIRE INSTALLATION USED TO PROVIDE GROUNDING. THIS METHOD SHALL BE USED WHEN THE SAME PARTY IS RESPONSIBLE FOR THE CONDUIT AND PAD INSTALLATION AND WHEN A SYSTEM NEUTRAL FROM A SUBSTATION OR GROUNDING BANK IS NOT PRESENT. USE PREFERRED GROUNDING METHOD ON PAGE 4510.1 WHEN A SYSTEM NEUTRAL IS PRESENT. (G)

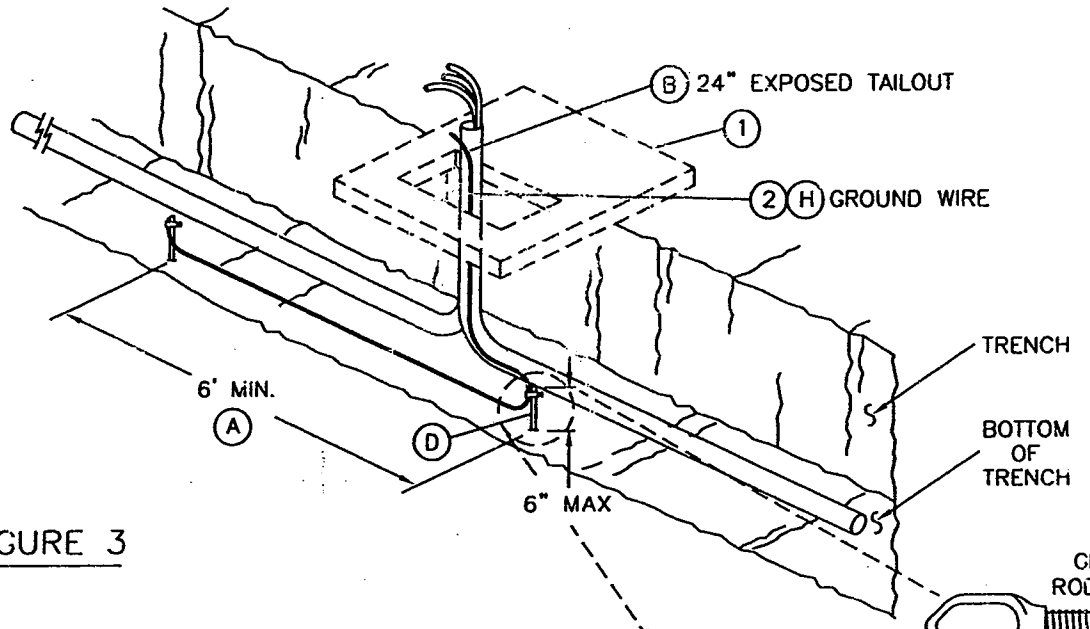

FIGURE 3

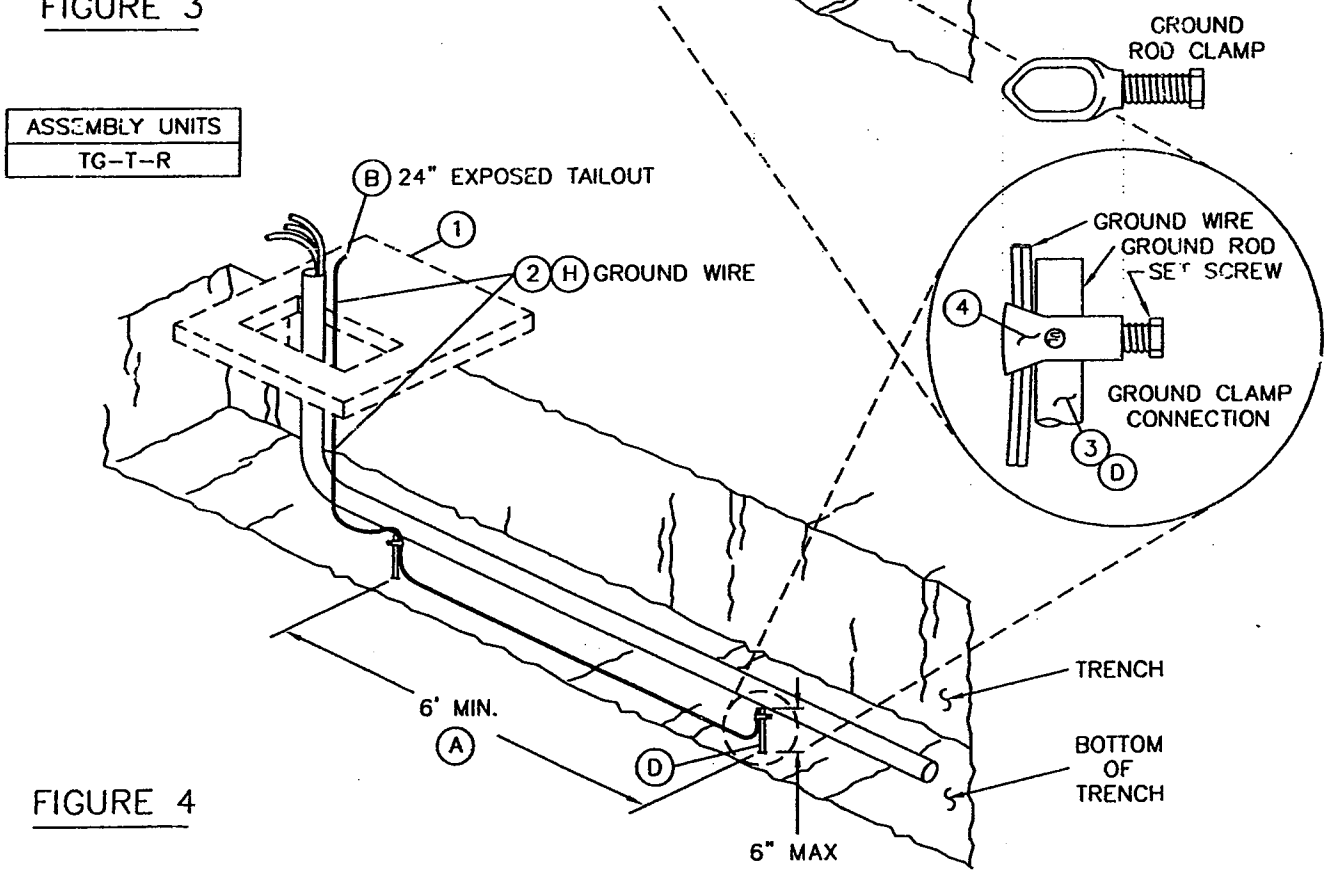

FIGURE 4

SERVICE GUIDE	Indicates Latest Revision	Completely Revised	New Page	Information Removed

4510.2	SDG&E ELECTRIC STANDARDS TRENCH GROUND WIRE (ALTERNATE)	REVISION DATE 1-1-96 APPD

8-117 (ADDENDUM NO. 2)

BILL OF MATERIAL:

ITEM	DESCRIPTION	QUANTITY	STOCK NUMBER	ASSEMBLY UNIT
1	PAD	1	REFER TO WORK ORDER	—
2	WIRE, BARE COPPER, #2, 7 STR. SOFT DRAWN	AS REQ'D	812816 (F)	GDWIRE
3	GROUND ROD, 5/8" X 8'-0", COPPERWELD	AS REQ'D	603072	—
4	GROUND ROD, CLAMP	AS REQ'D	230016	—

NOTES:

CUSTOMERS SERVICE TRENCH:

- THE SERVICE TRENCH IS ON PRIVATE PROPERTY AND BELONGS TO THE CUSTOMER, THEREFORE, THE TRENCH GROUND WIRE SHOULD NOT BE INSTALLED IN THE CUSTOMER TRENCH. THE SITUATION IS DIFFERENT ON A RULE 16 JOB WHERE THE PAD-MOUNTED EQUIPMENT, PRIMARY/SECONDARY AND SERVICE TRENCH ARE ALL ON PRIVATE PROPERTY AND THE PAD AND CONDUIT BELONGS TO THE CUSTOMER AND REMAINS THE CUSTOMERS RESPONSIBILITY. IN THIS CASE, THE TRENCH GROUND WIRE COULD BE INSTALLED IN EITHER THE PRIMARY/SECONDARY OR THE SERVICE TRENCH.

INSTALLATION:

(A) GROUND RODS TO HAVE A 6 FOOT MINIMUM SEPARATION.

(B) LEAVE 24 INCHES OF WIRE (EXPOSED TAILOUT) ABOVE THE TOP OF FINAL GRADE.

C. USE EQUIPMENT GROUNDING INSTALLATION (PREFERRED II) ON STANDARD PAGE 4512.1 IF TRENCH GROUND WIRE WAS NOT INSTALLED PRIOR TO BACKFILLING THE TRENCH.

(D) LOCATE GROUND RODS SO THEY DO NOT TOUCH CONDUITS. GENERAL ORDER 128 REQUIRES GROUND RODS TO BE DRIVEN. THEY MAY BE DRIVEN AT AN ANGLE IF IT IS DIFFICULT IF NOT IMPOSSIBLE TO DRIVE STRAIGHT DOWN.

REFERENCE:

E. SEE STANDARD 3484.1 FOR PAD INSTALLATION OF PAD-MOUNTED EQUIPMENT.

(F) SEE STANDARD 4002.2 FOR WIRE INFORMATION.

(G) SEE STANDARD PAGE 4512.1 FOR (PREFERRED II) EQUIPMENT GROUNDING INSTALLATION WHEN DIFFERENT PARTIES ARE RESPONSIBLE FOR THE CONDUIT AND PAD INSTALLATION.

(H) SEE STANDARD 4512.2 FOR EQUIPMENT GROUNDING INSTALLATION.

SERVICE GUIDE	Indicates Latest Revision	Completely Revised	New Page	Information Removed
REVISION	SDG&E ELECTRIC STANDARDS			
DATE 1-1-91 APPD	TRENCH GROUND WIRE (PREFERRED I OR ALTERNATE)			4510.3

8-118 (ADDENDUM NO. 2)

SCOPE: THIS STANDARD SHOWS THE INSTALLATION AND MATERIAL REQUIREMENTS FOR A 3316 HANDHOLE.

3316 HANDHOLE

PARKWAY COVER ASSEMBLY

12" PARKWAY FRAME W/O COVERS
WEIGHT: 2175# MAX.

STEEL COVERS

WEIGHT: 540# TOTAL

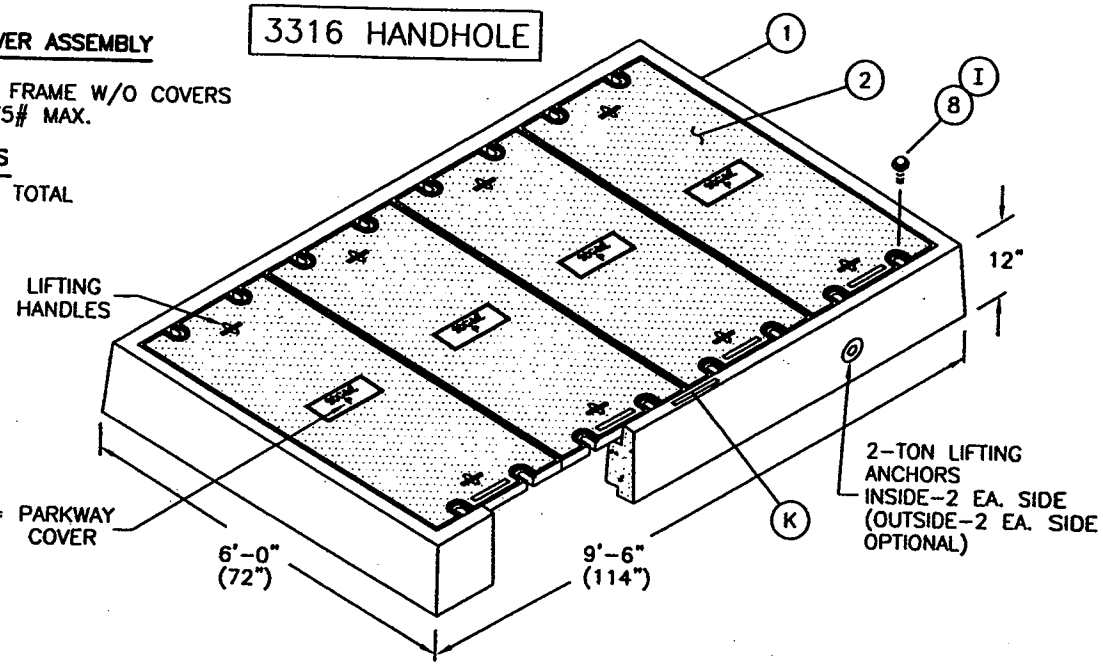

TRAFFIC COVER ASSEMBLY:

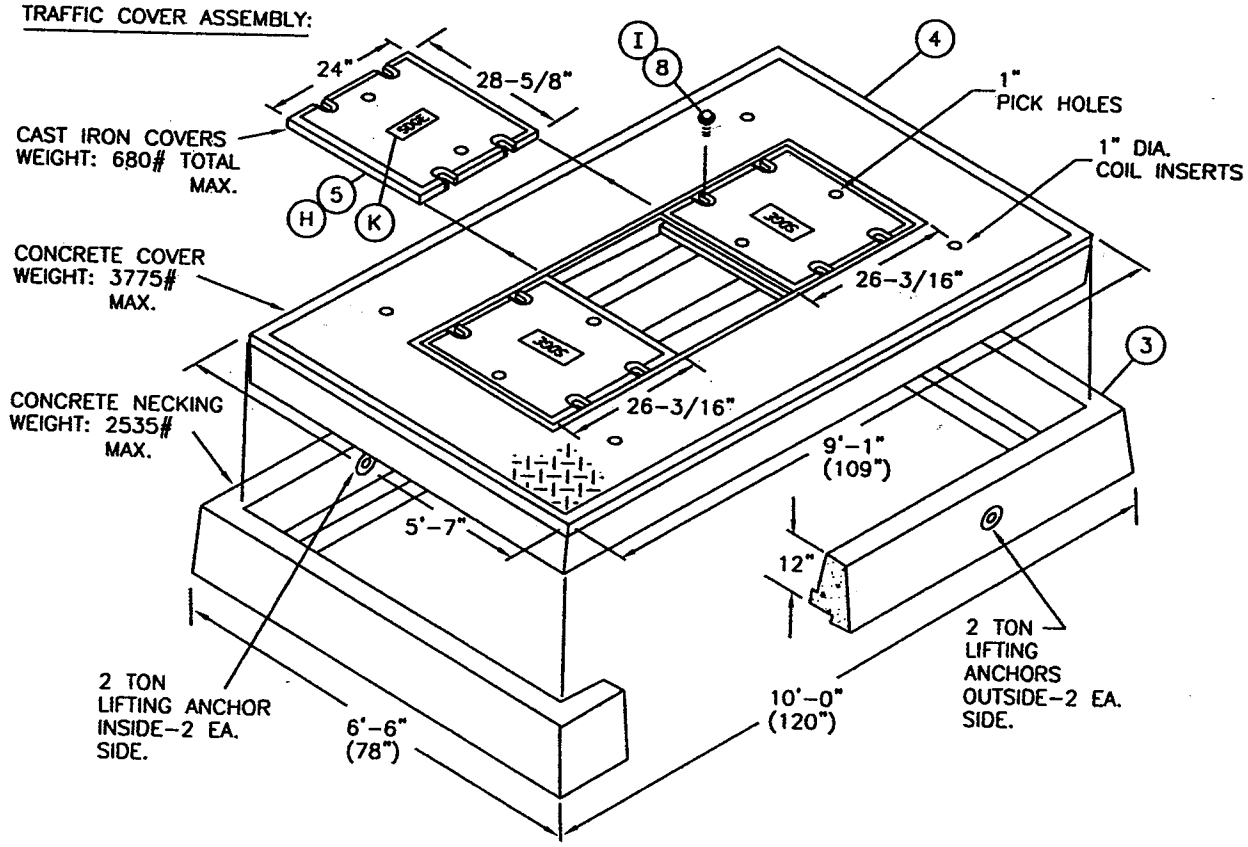

SERVICE GUIDE	Indicates Latest Revision	Completely Revised	New Page	Information Removed
REVISION	SDG&E ELECTRIC STANDARDS			
DATE 1-1-96 APPD	HANDHOLE EQUIPMENT ENCLOSURE (INSIDE DIMENSIONS – 5' x 8'-6")			3316.1

8-119 (ADDENDUM NO. 2)

3316 HANDHOLE

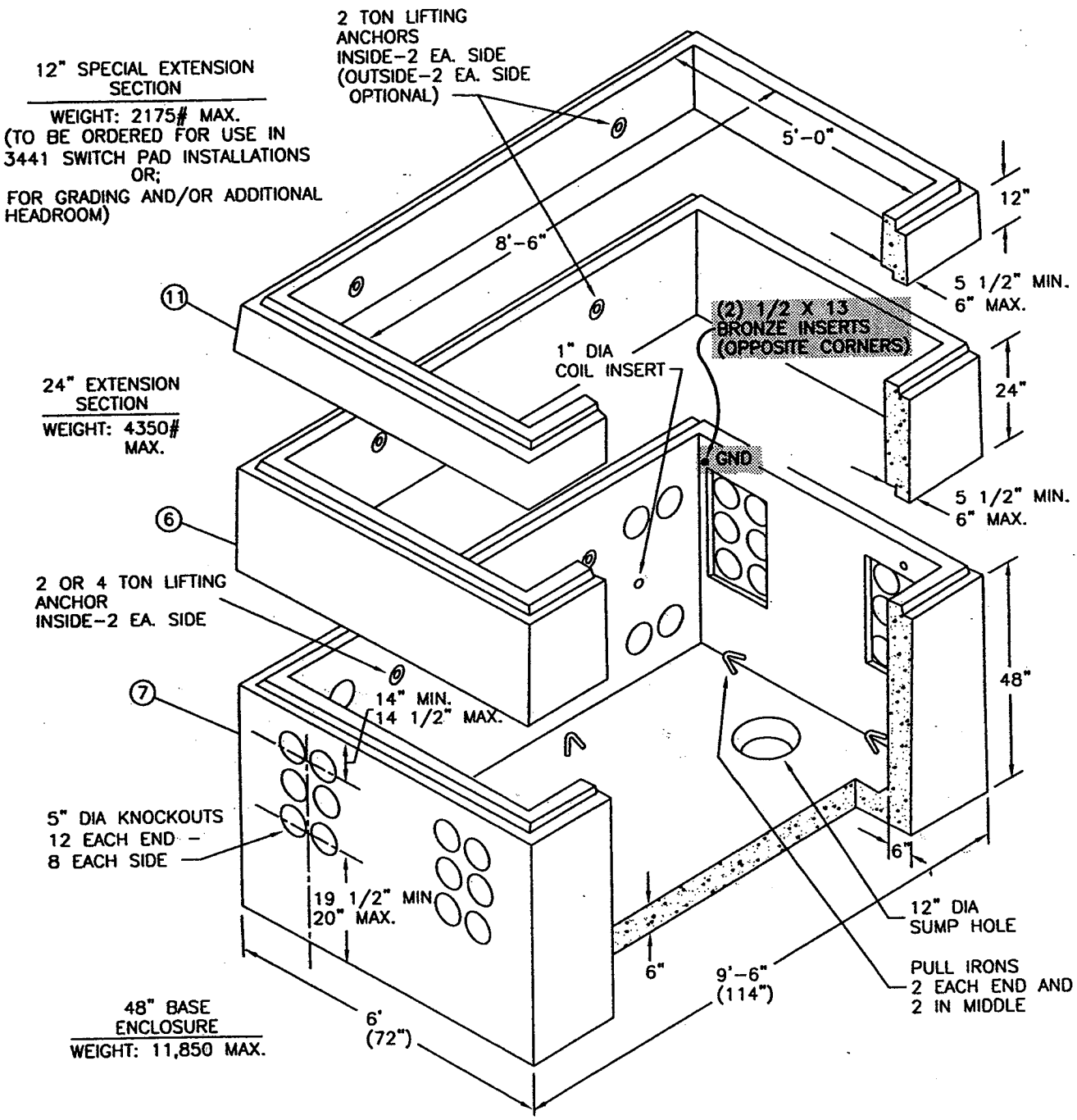

SERVICE GUIDE	[X] Indicates Latest Revision	Completely Revised	New Page	Information Removed

SDG&E ELECTRIC STANDARDS

3316.2	HANDHOLE EQUIPMENT ENCLOSURE (INSIDE DIMENSIONS - 5' x 8'-6")	REVISION DATE 1-1-2000 APPD

8-120 (ADDENDUM NO. 2)

NOTES:

- HANDHOLE SECTIONS AND COVERS FROM DIFFERENT SUPPLIERS ARE INTERCHANGEABLE.
- THE PREFERRED LOCATION FOR A 3316 HANDHOLE IS IN NONVEHICULAR TRAFFIC AREAS (BEHIND CURBS, PARKWAY POSITION, ETC.). USE A PARKWAY COVER IN THESE AREAS.
- HANDHOLES WITH A TRAFFIC COVER MAY BE INSTALLED IN AREAS WITH VEHICULAR TRAFFIC, BUT ONLY WHEN THERE IS NO NON-TRAFFIC LOCATION AVAILABLE.
- LIFTING ANCHORS ARE NOT TO BE USED FOR CABLE PULLING.
- 3316 HANDHOLES ARE DELIVERED BY THE SUPPLIER TO JOB SITE.

BILL OF MATERIAL FOR 3316 PARKWAY HANDHOLE:

ITEM	DESCRIPTION	QUANTITY	STOCK NUMBER	STOCK NUMBER	ASSEMBLY UNITS
1	FRAME, PARKWAY, 12"	1	248170	COMPLETE PARKWAY HANDHOLE 400310	3316FO
2	COVER, PARKWAY, 4 PC.	1	248164		3316CA
6	EXTENSION SECTION, 24"	1	248162		COMPLETE PARKWAY HANDHOLE 3316PC
7	ENCLOSURE, BASE, 42"	1	248160		
8	BOLT, PENTAHEAD, 1/2" X 2-1/2"	16	156012		
9	SEALANT, PLASTIC-MASTIC	AS REQ'D	631872		
10	LUBRICANT EZ-1	AS REQ'D	469764		
11	EXTENSION SECTION, 12" (FOR USE IN 3441 SWITCH PAD INST., 3671 SUBSURFACE/SURFACE OPERABLE SWITCH INST. OR FOR GRADING AND/OR ADDITIONAL HEADROOM)	AS REQ'D	336208		
12	GRAVEL, 3/8"-3/4" *	AS REQ'D	--		

BILL OF MATERTAL FOR 3316 TRAFFIC HANDHOLE:

ITEM	DESCRIPTION	QUANTITY	STOCK NUMBER	STOCK NUMBER	ASSEMBLY UNITS
3	COVER, NECKING, TRAFFIC, 12"	1	248166	COMPLETE TRAFFIC HANDHOLE 400312	3316TA
4	COVER, CONCRETE, TRAFFIC	1	248168		
5	COVER, CAST-IRON, TRAFFIC (3 PC.)	1	287734		
6	EXTENSION SECTION, 24"	1	248162		COMPLETE TRAFFIC HANDHOLE 3316TC
7	ENCLOSURE, BASE, 42" (INSIDE DIMENSIONS)	1	248160		
8	BOLT, PENTAHEAD, 1/2" X 2 1/2"	12"	156012		
	WASHER, 1/2", FLAT ROUND STAINLESS STEEL	12"	799680		
9	SEALANT, PLASTIC-MASTIC	AS REQ'D	631872		
10	LUBRICANT EZ-1	AS REQ'D	469764	--	--
11	EXTENSION SECTION, SPECIAL 12" (FOR USE IN 3441 SWITCH PAD INST., 3671 SUBSURFACE/SURFACE OPERABLE SWITCH INST. OR FOR GRADING AND/OR ADDITIONAL HEADROOM)	AS REQ'D	336208		3316X1
12	GRAVEL, 3/8"-3/4" *	AS REQ'D	--		--

INSTALLATION:

A. ESTABLISH THE HANDHOLE LOCATION PAYING PARTICULAR ATTENTION TO FOREIGN UTILITY PLACEMENTS RELOCATING THE HANDHOLE TO ANOTHER LOCATION REQUIRES APPROVAL FROM PROJECT MANAGEMENT.

B. AFTER THE LOCATION IS ESTABLISHED, MARK OUT DIMENSIONS FOR THE EXCAVATION WIDTH, LENGTH AND DEPTH PER DRAWING BELOW. THE WIDTH AND LENGTH DIMENSIONS GIVEN, ALLOW AN EXTRA 8 INCHES FOR SETTING THE SUBSTRUCTURE.

SERVICE GUIDE	Indicates Latest Revision	Completely Revised	New Page	Information Removed
REVISION	SDG&E ELECTRIC STANDARDS			
DATE 1-1-98 APPD BJT/CMC	HANDHOLE EQUIPMENT ENCLOSURE (INSIDE DIMENSIONS - 5' x 8'-6")			3316.3

8-121 (ADDENDUM NO. 2)

EXCAVATION DIMENSIONS

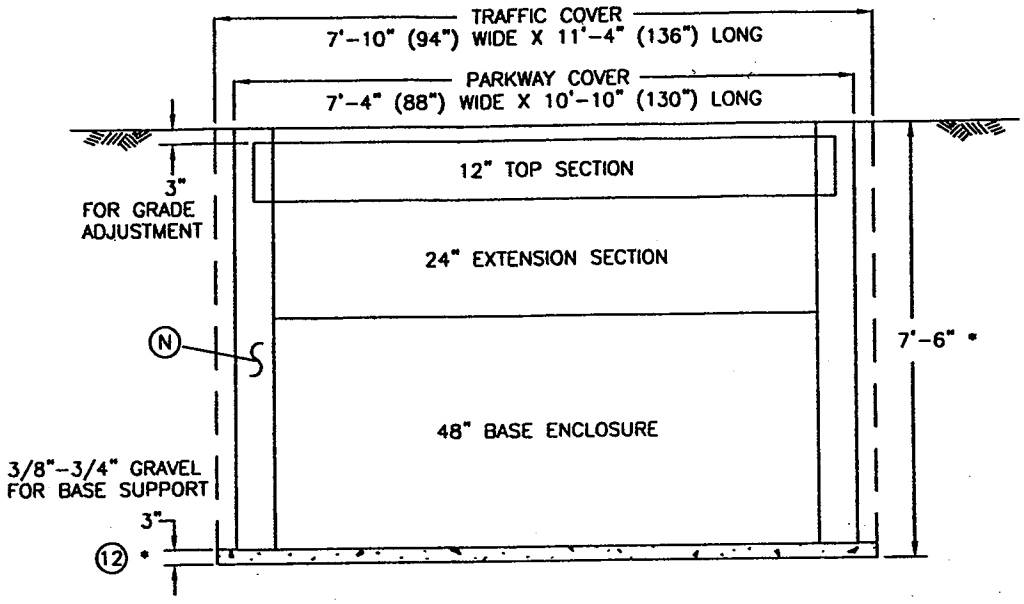

***EXCAVATION DEPTH ALLOWS 3 INCHES FOR ADJUSTMENT TO FINAL GRADE AND AN ADDITIONAL 3 INCHES FOR PLACEMENT OF GRAVEL AS BASE SUPPORT.**

C. EXCAVATION IS NOW PREPARED FOR INSTALLATION OF SUBSTRUCTURE SECTIONS. PLACE PLASTIC-MASTIC SEALANT BETWEEN ALL SECTIONS. USE DOUBLE SEAL IF FIELD CONDITIONS INDICATE THAT WATER WILL PENETRATE THE JOINTS. DO NOT APPLY SEALANT UNDER THE TOP SECTION IF CONCRETE IS REQUIRED FOR GRADE ADJUSTMENT. ASSURE THE SUBSTRUCTURE WALLS ARE STRAIGHT AND THE FLOOR IS LEVEL.

D. TO DETERMINE FINAL GRADE, ONE OF THE TWO FOLLOWING METHODS MAY BE USED: 1) WHEN CURB OR GRADE LEVEL IS ALREADY ESTABLISHED, MEASURE FROM THE TOP OF CURB OR GRADE OR 2) HAVE THE FIELD ENGINEER SET THE GRADE STAKES. AFTER GRADE LEVEL IS ESTABLISHED, SET A STRING LINE FOR CHECKING GRADE LEVEL.

F. ALIGN HANDHOLE COVER TO FINAL GRADE USING BRICKS OR WOODEN WEDGES. BEFORE POURING CONCRETE (4-SACK MIX WITH 3/8 INCH GRAVEL OR AS REQUIRED BY CITY OR COUNTY CODES). FRAME THE INSIDE OPEN AREA BETWEEN SECTIONS SO CONCRETE CAN BE POURED FROM THE OUTSIDE OF THE TOP COVER SECTION. MAKE SURE THE BRICKS OR WOODEN WEDGES DO NOT SHOW FROM THE INSIDE ONCE THE CONCRETE IS POURED. THE INSIDE FRAME MAY BE OMITTED IF THE CONCRETE IS NOT TOO WET. IF FRAME IS OMITTED, TROWEL CONCRETE SMOOTH ON THE INSIDE.

G. INSTALL CONDUITS USING THE BOTTOM OUTSIDE (CLOSEST TO THE WALL) KNOCKOUTS FIRST.

H. WHEN INSTALLING THE TRAFFIC COVER, PLACE THE OUTSIDE CAST IRON COVERS ON FIRST, THEN SLIDE THE CENTER CAST IRON COVER ON LAST. WHEN REMOVING CAST IRON COVERS, SLIDE CENTER COVER OFF FIRST. SEE DRAWINGS ON PAGES 3316.1 AND 3316.3.

I. **APPLY LUBRICANT (EZ-1) TO THE PENTAHEAD BOLTS WHEN SECURING THE COVERS TO REDUCE REMOVAL OR INSTALLATION DIFFICULTIES. TIGHTEN DOWN BOLTS WITH TORQUE WRENCH TO 30 FT./LBS. MIN., 40 FT./LBS. MAX.**

J. CORE BORE INDENTION'S ARE PROVIDED AND SHOULD BE UTILIZED WHEN INSTALLING CONDUITS FROM THE SIDE. THESE INDENTION'S ARE EITHER ON THE INSIDE OF OUSIDE OF THE LONG SIDE WALLS. DO NOT CORE BORE OTHER THAN THE PROVIDED INDENTIONS, AS IT MAY REDUCE THE STRUCTURAL INTEGRITY.

REFERENCE:

K. SEE STANDARD 3211 FOR INSTALLATION OF IDENTIFICATION TAG.
L. SEE STANDARD 3302 FOR SUBSTRUCTURE APPLICATIONS.
M. SEE STANDARD 3306 FOR INSTALLATION OF PLASTIC-MASTIC SEALANT.
N. SEE STANDARD 3365 FOR SLURRY BACKFILL.
O. SEE STANDARD 3483 FOR MINIMUM OPERATING AND CLEARANCE REQUIREMENTS.
P. SEE STANDARD 3485 WHEN SETTING HANDHOLE ON A SLOPING GRADE.
Q. SEE STANDARD 3486 FOR RETAINING WALL REQUIREMENTS AND CLEARANCES FROM REVERSE SUBGRADE RETAINING WALLS.
R. SEE STANDARD 3605 FOR SUBSTRUCTURE USE AND LIMITATIONS REFERENCE SHEET (MAXIMUM NUMBER OF CABLES, CONNECTORS AND CONDUITS).

SERVICE GUIDE	Indicates Latest Revision	Completely Revised	New Page	Information Removed

	SDG&E ELECTRIC STANDARDS	REVISION
3316.4	HANDHOLE EQUIPMENT ENCLOSURE (INSIDE DIMENSIONS - 5' X 8'-6")	DATE 1-1-98 APPD BJT/CAK

8-122 (ADDENDUM NO. 2)

SCOPE: THIS STANDARD SHOWS CEMENT AND SLURRY MIXTURE. ALSO SHOWN ARE CONCRETE SLURRY ENCASED CONDUIT INSTALLATIONS.

DATA FOR CONDUITS WHICH ARE NORMALLY INSTALLED 2 CONDUITS WIDE AND 1 THRU 4 ROWS HIGH		
NUMBER OF CONDUITS IN TRENCH	CONCRETE PER 100 FT OF TRENCH, CUBIC YARDS	
	4" CONDUITS	5" CONDUITS
2	5.5	5.2
4	8.7	8.5
6	12.4	11.8
8	16.1	15.1

INGREDIENTS FOR 1-SACK CONCRETE SLURRY MIX (PER YARD)										
CEMENT FOR	AIR ENTRAINMENT %	SAND (LBS)	GRAVEL		CEMENT		MAX., TOTAL WATER	SLUMP	
			SIZE	LBS	SACKS	LBS		MIN. (IN)	MAX. (IN)
ENCASEMENT	0-2	3000 ± 50	–	–	1	94	60 GALS PER YARD	6	8

INGREDIENTS FOR 2-SACK CONCRETE MIX (PER YARD)									
CEMENT FOR	AIR ENTRAINMENT %	SAND (LBS)	GRAVEL		CEMENT		MAX., TOTAL WATER PER SACK OF CEMENT (GALS.)	SLUMP	
			SIZE	LBS	SACKS	LBS		MIN. (IN)	MAX. (IN)
ENCASEMENT	0-2	1600 ± 20	3/8	1600 ± 20	2	188	50 GALS PER YARD	6	8

NOTES:

SECONDARY SERVICE TRENCH

(SEE PAGES 3421.2, 3425.2, 3426.3 AND 3427.3 FOR CONDUIT PLACEMENT AND TRENCH CONFIGURATION. SEE PAGES 3370.3 OR 3371.3 FOR SHADING/BACKFILL REQUIREMENTS, AND TRENCH DEPTH).

INSTALLATION WHERE CONCRETE SLURRY ENCASEMENT (1-SACK MIX) AND SPACERS **ARE** REQUIRED:

1. WHEN CONDUITS ARE IN A STACKED CONFIGURATION WITH SPACERS, ENCASED BURIED (EB) CONDUITS MUST BE ENCASED WITH 1-SACK SLURRY. DIRECT BURIED (DB) CONDUITS ARE ALSO ACCEPTABLE WHEN EXTENDED FROM A DIRECT BURIED TRENCH INTO THE STACKED CONFIGURATION.

INSTALLATION FOR CONCRETE SLURRY ENCASEMENT (1-SACK MIX) OR IMPORTED/NATIVE MATERIAL WITHOUT SPACERS:

1. WHEN CONDUITS ARE SIDE BY SIDE ON THE BOTTOM OF THE TRENCH (4 CONDUITS MAX.). IN THE TRANSITION AREA WHERE THE CONDUITS FROM THE BOTTOM OF THE TRENCH START TOWARD THE SURFACE (THE STRAIGHT PORTION BY THE 90° BEND), SPACERS MAY BE REQUIRED TO ALLOW THE 90° BENDS TO ENTER STRAIGHT INTO THE PAD OPENING. USE DIRECT BURIED (DB) CONDUIT WITH IMPORTED NATIVE MATERIAL. USE ENCASED BURIED (EB) CONDUITS WITH CONCRETE SLURRY ENCASEMENT (1-SACK MIX). DIRECT BURIED (DB) CONDUITS ARE ALSO ACCEPTABLE.

2. IF THE SERVICE CONDUIT EXTENDS INTO THE MAIN TRENCH WHERE STACKING IS REQUIRED, ALL CONDUITS SHALL BE INSTALLED IN ONE PACKAGE WITH SPACERS AND 1-SACK SLURRY.

MAIN TRENCH OR PRIMARY SERVICE TRENCH

INSTALLATION WHERE CONCRETE SLURRY ENCASEMENT (1-SACK MIX) AND SPACERS ARE REQUIRED:

NOTES:

- SEE PAGES 3370.3 OR 3371.3 FOR SHADING AND BACKFILL REQUIREMENTS AND TRENCH DEPTH.
- SEE DESIGN MANUAL 5722 FOR FEEDER CONDUIT APPLICATIONS.
- ALL 5 INCH CONDUITS MUST BE ENCASED WITH CONCRETE SLURRY (1-SACK MIX).

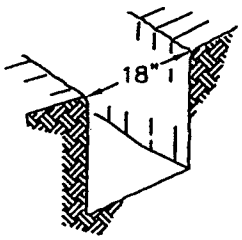

MAIN TRENCH OR PRIMARY SERVICE TRENCH

(STACKED CONDUIT CONFIGURATION USING EB CONDUIT, CONDUIT SPACERS AND 1-SACK CONCRETE SLURRY)

1. EXCAVATE TRENCH TO REQUIRED DEPTH AND WIDTH. SEE STANDARDS 3376, 3370 OR 3371 FOR TRENCHING REQUIREMENTS.

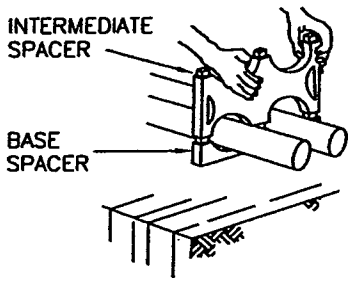

2. MULTI-SIZED CONDUIT SYSTEMS TO BE A MAXIMUM OF TWO CONDUITS WIDE AND FIVE CONDUITS HIGH (UP TO TEN * SPACER POSITIONS IN ONE TRENCH). IF MORE THAN TEN POSITIONS ARE REQUIRED, A SEPARATE CONDUIT BANK SHALL BE INSTALLED IN A SEPARATE TRENCH. MAINTAIN 5 FEET SEPARATION WITH 3 FEET OF UNDISTURBED NATIVE SOIL BETWEEN TRENCHES.

3. ASSEMBLE CONDUITS IN SPACERS ON TOP OF THE GROUND OR IN THE TRENCH. PLACE SPACERS 8 TO 10 FEET APART.

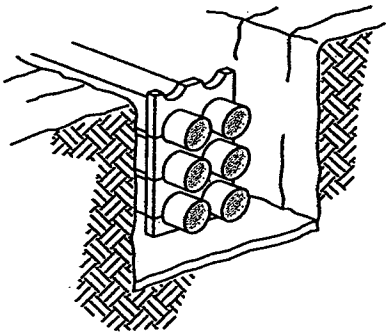

4. SPOT POUR 1-SACK OVER CONDUITS APPROXIMATELY AT 25 FOOT INTERVALS TO PREVENT CONDUITS FROM FLOATING.

5. A CONCRETE ENVELOPE USING 1-SACK CONCRETE MIX (PER TABLE ON PAGE 3376.1) IS TO BE POURED AROUND AND OVER THE CONDUITS. TRENCH BACKFILL MATERIAL SHALL MEET THE GOVERNING AUTHORITY'S REQUIREMENTS AND COMPANY STANDARDS.

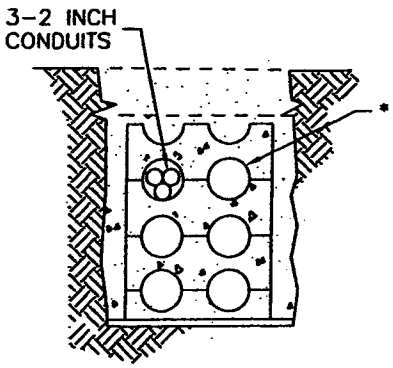

6. TWO OR THREE 2 INCH CONDUITS MAY BE INSTALLED IN ONE SPACER POSITION.

SERVICE GUIDE	Indicates Latest Revision	Completely Revised	New Page	Information Removed

REVISION	SDG&E ELECTRIC STANDARDS	
DATE 1-1-98 APPD RBT/CMC	CONDUIT ENCASED MULTI-CONDUIT INSTALLATION	3376.2

8-124 (ADDENDUM no. 2)

NOTES:

(MAXIMUM TWO 5 INCH CONDUITS USING CONDUIT SPACERS – ELECTRIC TRENCH ONLY)

- ALL 5 INCH PRIMARY CONDUITS MUST BE ENCASED WITH CONCRETE SLURRY (1–SACK MIX).
- USE DIRECT BURIED (DB) CONDUIT EVEN THOUGH THEY ARE ENCASED IN 1–SACK CONCRETE SLURRY.

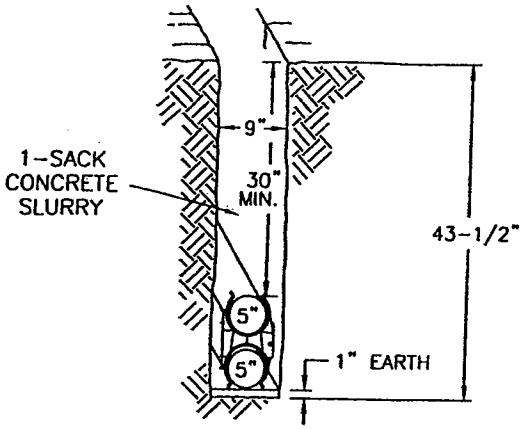

(5 INCH CONDUIT INSTALLATIONS WITHOUT SPACERS USING 1–SACK CONCRETE SLURRY–ELECTRIC TRENCH ONLY MAXIMUM OF 2–5" CONDUITS.)

NOTES:

- ALL 5 INCH PRIMARY CONDUIT MUST BE ENCASED WITH CONCRETE SLURRY. (1–SACK MIX)
- USE DIRECT BURIED (DB) 5" CONDUIT EVEN THOUGH THEY ARE ENCASED IN 1–SACK CONCRETE SLURRY.
- SEE STANDARD 3365 FOR TYPICAL PLACEMENT OF TRENCH MATERIAL.
- THE EXAMPLES SHOWN ARE TYPICAL. OTHER CONDUIT COMBINATIONS MAY BE USED PROVIDED THE TOTAL NUMBER DOES NOT EXCEED FOUR. 1–INCH CONDUITS MAY BE ADDED AS NEEDED.
- ALWAYS INSTALL 5 INCH CONDUITS ON THE OUTER SIDE OF THE TRENCH.
- THE EXAMPLES SHOWN MAY BE USED IN A JOINT TRENCH CONFIGURATION.

EXAMPLES

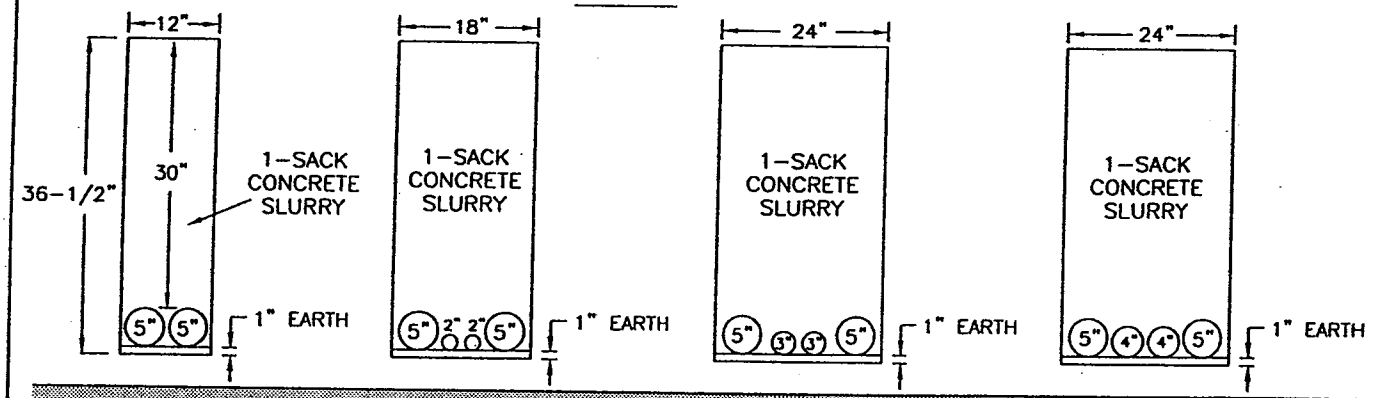

(CONDUIT SMALLER THAN 5 INCH, CONCRETE SLURRY ENCASEMENT 1–SACK MIX OR IMPORTED/NATIVE MATERIAL)

NOTES:

- ANY CONDUIT COMBINATION SMALLER THAN 5 INCHES MAY BE INSTALLED SIDE BY SIDE ON THE BOTTOM OF THE TRENCH. (6 INCH MINIMUM TRENCH WIDTH, 24 INCH MAXIMUM TRENCH WIDTH).
- THE CONDUIT COMBINATIONS DESCRIBED MAY BE USED IN A JOINT TRENCH CONFIGURATION.
- USE ENCASED BURIED (DB) CONDUIT WHEN THEY ARE ENCASED IN 1–SACK CONCRETE SLURRY. USE DIRECT BURIED (DB) CONDUIT WHEN IMPORTED/NATIVE MATERIAL SURROUNDS THE CONDUIT.
- NARROW TRENCHES, 6 INCHES THROUGH 12 INCHES REQUIRE 1–SACK CONCRETE SLURRY OR MINIMUM 90% COMPACTION FOR IMPORTED OR NATIVE MATERIAL.
- SEE STANDARD 3365 FOR TYPICAL PLACEMENT AND PREFERRED TRENCH MATERIAL.

SERVICE GUIDE	[X] Indicates Latest Revision	Completely Revised	New Page	Information Removed

3376.3	SDG&E ELECTRIC STANDARDS CONDUIT ENCASED MULTI–CONDUIT INSTALLATION	REVISION DATE 1–1–2000 APPD

8-125 (ADDENDUM NO. 2)

SCOPE: THIS STANDARD SHOWS THE CONDUIT AND FITTINGS USED TO CONSTRUCT UNDERGROUND CONDUIT SYSTEMS. CONDUIT AND FITTINGS IN THIS STANDARD SHALL BE USED IN BELOW-GROUND OR BRIDGE CELL APPLICATIONS.

NOTES:

(PVC) POLYVINYLCHLORIDE CONDUIT

- PVC CONDUIT SHALL BE GRAY OR BLACK IN COLOR. NO OTHER COLOR IS ACCEPTABLE ON THE COMPANY CONDUIT SYSTEM.
- FOR SCHEDULE 40 AND SCHEDULE 80 ABOVE-GROUND COMPONENTS TO CONSTRUCT CABLE POLE RISERS, SEE UNDERGROUND STANDARD 4204.
- EB CONDUIT IS REQUIRED FOR INSTALLATIONS REQUIRING ENCASEMENT, CONCRETE SLURRY (1-SACK MIX).
- ALL 5" CONDUIT MUST BE ENCASED WITH CONCRETE SLURRY. (1-SACK MIX).
- DB CONDUIT IS REQUIRED FOR INSTALLATIONS REQUIRING DIRECT BURIED MATERIAL, i.e. SAND, DECOMPOSED GRANITE (DG), NATIVE, ETC.
- FOR DIRECT BURIED INSTALLATIONS, DB 60 IS REQUIRED FOR 2" & 3" CONDUIT. DB 100 IS REQUIRED FOR 2" & 3" CONDUIT. DB 100 IS REQUIRED FOR 4" CONDUIT.
- ALL COUPLINGS, BENDS AND SWEEPS CLASSIFIED AS DB ARE TO BE USED WITH DB AND EB CONDUIT.
- DB = DIRECT BURIED CONDUIT.
- EB = ENCASED BURIED CONDUIT.
- THE SHELF LIFE FOR EB/DB CONDUIT, BENDS, AND FITTINGS EXPOSED TO SUNLIGHT IS 6 MONTHS MAXIMUM. 2-#8 FROM A RISER POLE TO THE FIRST LOCATION SHALL BE INSTALLED IN 2" CONDUIT.

** - SCHEDULE 40 CONDUIT IS REQUIRED IN BRIDGE CELLS.

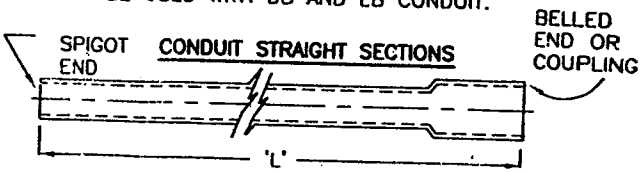

CONDUIT SIZE	TYPE	LENGTH 'L'	STOCK NUMBER	ASSEMBLY UNITS		
				1-SACK ENCASE W/SPACERS	PRIMARY	SEC/SERV
2"	DB 60	20'	249632	1EB2IN	1DB2-P	1DB2-S
3"	DB 60	20'	249664	1EB3IN	1DB3-P	1DB3-S
4"	DB 100	20'	249710	1EB4IN	1DB4-P	1DB4-S
5"	DB 60	20'	249728	1, 2DB5SL	-	1DB5-S
	** SCH40	10'	251408	-	S40-5"	S40-5"

(PE) POLYETHYLENE CONDUIT

CONDUIT SIZE	TYPE	COIL LENGTH	STOCK NUMBER	ASSEMBLY UNIT
1"	SDR 9	2000'	249630	1" PE
2"	SCH 40	2500'	252002	-
3"	SCH 40	1000'	252004	-
4"	SDR 15.5	500'	252006	-
5"	SCH 80	20' LENGTHS	252008	-

NOTES:

POLYETHYLENE CONDUIT SHALL BE BLACK OR BLACK WITH THREE EQUALLY SPACED RED STRIPS. NO OTHER COLOR IS ACCEPTABLE ON THE COMPANY CONDUIT SYSTEM.

CORRUGATED POLYETHYLENE CONDUIT IS NOT ACCEPTABLE ON THE COMPANY CONDUIT SYSTEM.

REFERENCE:

SEE STANDARD 3383 FOR SPLICING OR REPAIRING 1" POLYETHYLENE CONDUIT.

NOTES: ***

S/N 280384 SCH 40 PVC MAY BE USED AS A REPLACEMENT ON A TEMPORARY BASIS. (DEPENDS ON SUPPLIER OF COUPLING).

CONDUIT COUPLINGS

FIGURE A

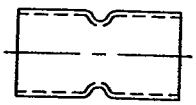

DB SWEDGE COUPLING

FIGURE B

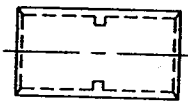

DB MOLDING COUPLING (BOTH WITH CENTER STOPS)

FIGURES A & B	
COUPLING CONDUIT SIZE	DB OR EB STOCK NUMBER
2"***	279872
3"	279904
4"	279936
5"	280032

FIGURE C

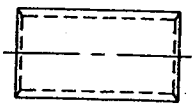

DB STRAIGHT COUPLING (WITHOUT CENTER STOPS, TO BE USED ONLY WHEN REPAIRING EXISTING CONDUIT SYSTEMS)

FIGURE C	
COUPLING CONDUIT SIZE	DB OR EB STOCK NUMBER
2"	-
3"	279920
4"	279952
5"	280064

SERVICE GUIDE	Indicates Latest Revision	Completely Revised	New Page	X Information Removed

REVISION

DATE 3-1-02

APPD RBD / VCR

SDG&E ELECTRIC STANDARDS

CONDUIT AND CONDUIT FITTINGS

3373.1

8-126 (ADDENDUM NO. 2)

CONDUIT PLUG

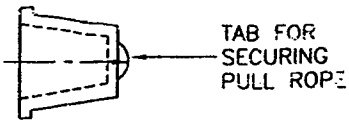

CONDUIT SIZE	STOCK NUMBER	ASSEMBLY UNITS
2"	544768	PLUG-2
3"	544800	PLUG-3
4"	544704	PLUG-4
5"	544736	PLUG-5

CONDUIT BELL REDUCER

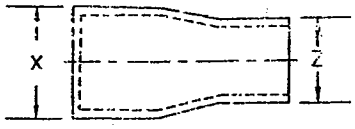

CONDUIT SIZE X TO Z	STOCK NUMBER	ASSEMBLY UNITS
3"-2"	573376	RED3-2
4"-3"	573380	RED4-3
5"-4"	573384	RED5-4

CONDUIT END CAP

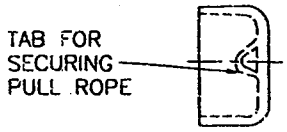

CONDUIT SIZE	STOCK NUMBER	ASSEMBLY UNITS
2"	203296	RED3-2
3"	203328	RED4-3
4"	203360	RED5-4
5"	203392	RED6-5

CONDUIT BENDS
(EXAMPLES)

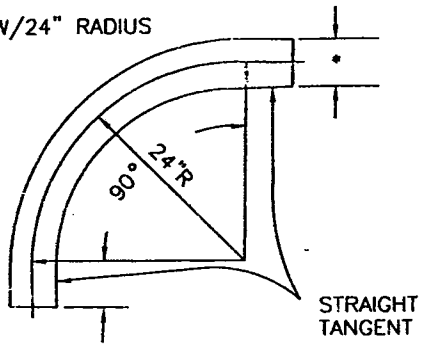

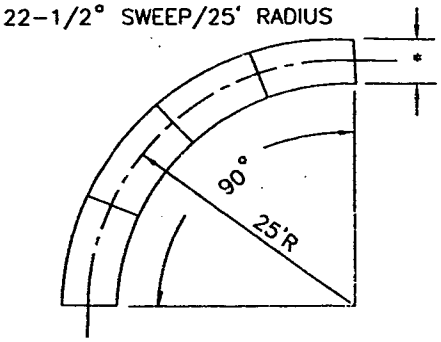

BILL OF MATERIAL:

* NOMINAL CONDUIT SIZE	DEGREE OF CURVATURE	RADIUS OF CURVATURE	TYPE OF CONDUIT	STOCK NUMBER	ASSEMBLY UNITS		
					CONCRETE ENCASE	PRIMARY	SEC/SERV
2"	22-1/2°	25'-0"	DB 60	321808	1EB2-S	1DB2PS	1DB2SS
	45°	24"(SECONDARY ONLY)	DB 60	321920	–	–	1DB2S8
	45°	36"	DB 60	321810	1EB2-8	1DB2-8	–
	90°	24"(SECONDARY ONLY)	DB 60	321984	–	–	1DB2SB
	90°	36"	DB 60	321812	1EB2-B	1DB2-B	–
3"	11-1/4°	25'-0"	DB 60	321876	1EB3-C	1DB3-C	1DB3SC
	22-1/2°	25'-0"	DB 60	322144	1EB3-S	1DB3PS	1DB3SS
	45°	36"	DB 60	321878	1EB3-8	1DB3-8	1DB3S8
	90°	36"	DB 60	322048	1EB3-B	1DB3-B	1DB3SB
4"	11-1/4°	25'-0"	DB 100	321884	1EB4-C	1DB4-C	1DB4SC
	22-1/2°	25'-0"	DB 100	321826	1EB4-S	1DB4PS	1DB4SS
	45°	36"	DB 100	321942	1EB4-8	1DB4-8	1DB4S8
	90°	36"	DB 100	322082	1EB4-B	1DB4-B	1DB4SB
5"	11-1/4°	25'-0"	DB 60	321882	1EB5-C	1DB4-C	1DB5SC
	22-1/2°	25'-0"	DB 60	321856	1EB5-S	1DB5PS	1DB5SS
	45°	36"	DB 60	321960	1EB5-8	1DB5-8	1DB5S8
	90°	36"	DB 60	322112	1EB5-B	1DB5-B	1DB5SB

SERVICE GUIDE	Indicates Latest Revision	Completely Revised	New Page	Information Removed

3373.2	SDG&E ELECTRIC STANDARDS CONDUIT AND CONDUIT FITTINGS ED AND DB	REVISION DATE 1-1-96 APPD RWT/RDG

8-127 (ADDENDUM NO. 2)

SCOPE: THIS STANDARD SHOWS NEW CONSTRUCTION FOR SINGLE AND MULTIPLE CONDUIT RISERS.

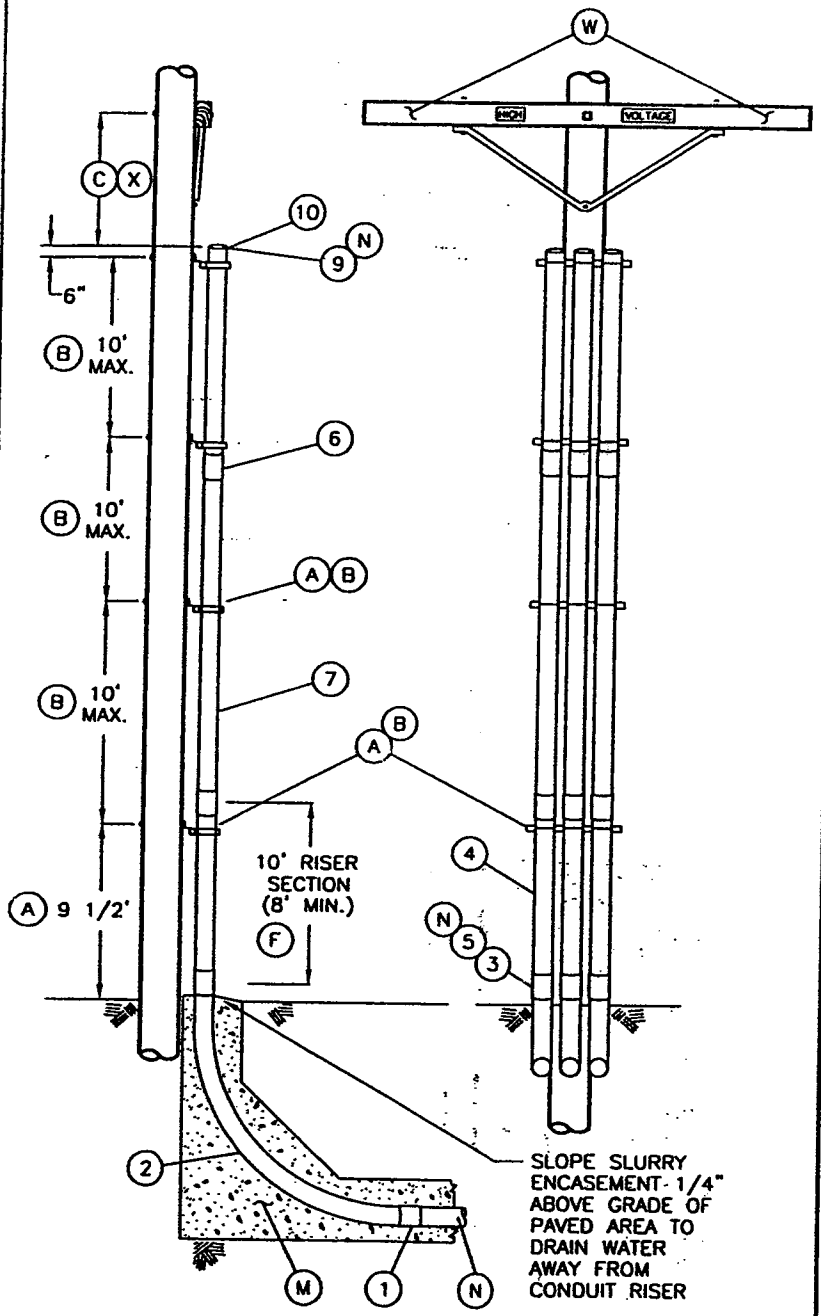

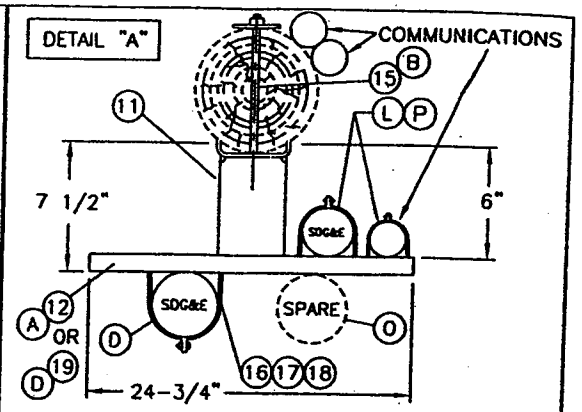

PREFERRED CONSTRUCTION FOR NEW SINGLE RISER WITH AND WITHOUT EXISTING RISER(S) ON POLE (SEE NOTE H)

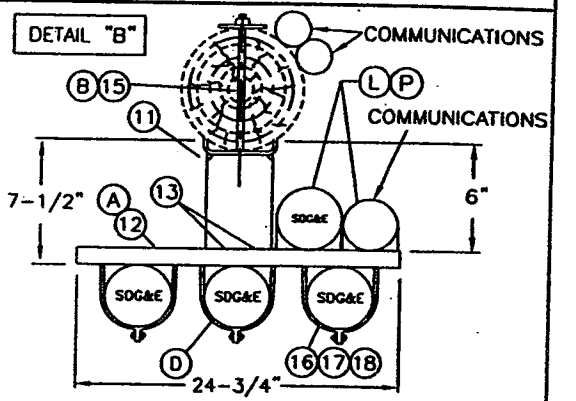

NEW MULTIPLE RISER CONSTRUCTION (SEE NOTE I)

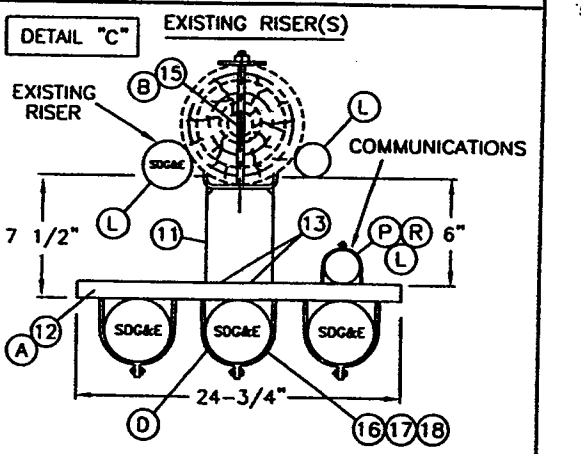

NEW MULTIPLE RISER CONSTRUCTION WITH RISER(S) ON POLE (SEE NOTE J)

NOTES:

- THIS CONSTRUCTION IS LIMITED TO A MAXIMUM OF FOUR SDG&E RISERS (NO MORE THAN TWO PRIMARY RISERS).
- WHENEVER POSSIBLE, RISER SHOULD BE INSTALLED ON THE SIDE OF THE POLE OPPOSITE TRAFFIC FLOW.
- SPARE CONDUITS SHALL BE CAPPED **JUST ABOVE GROUND LEVEL** TO PREVENT MOISTURE OR WIRE ENTRY AND KEEP DEBRIS OUT. SPARES ARE NOT TO BE CONSIDERED AS A RISER.
- WHENEVER POSSIBLE, SINGLE RISERS SHOULD BE INSTALLED AWAY FROM THE TRAFFIC TOWARD THE SIDEWALK.

SERVICE GUIDE PG. 310	Indicates Latest Revision	Completely Revised	New Page	Information Removed

~~OH 1404.1~~ UG 4204.1	SDG&E ELECTRIC STANDARDS CABLE POLE RISER INSTALLATION	REVISION DATE 1-1-96 APPD PSA 1/2/96

8-128 (ADDENDUM NO. 2)

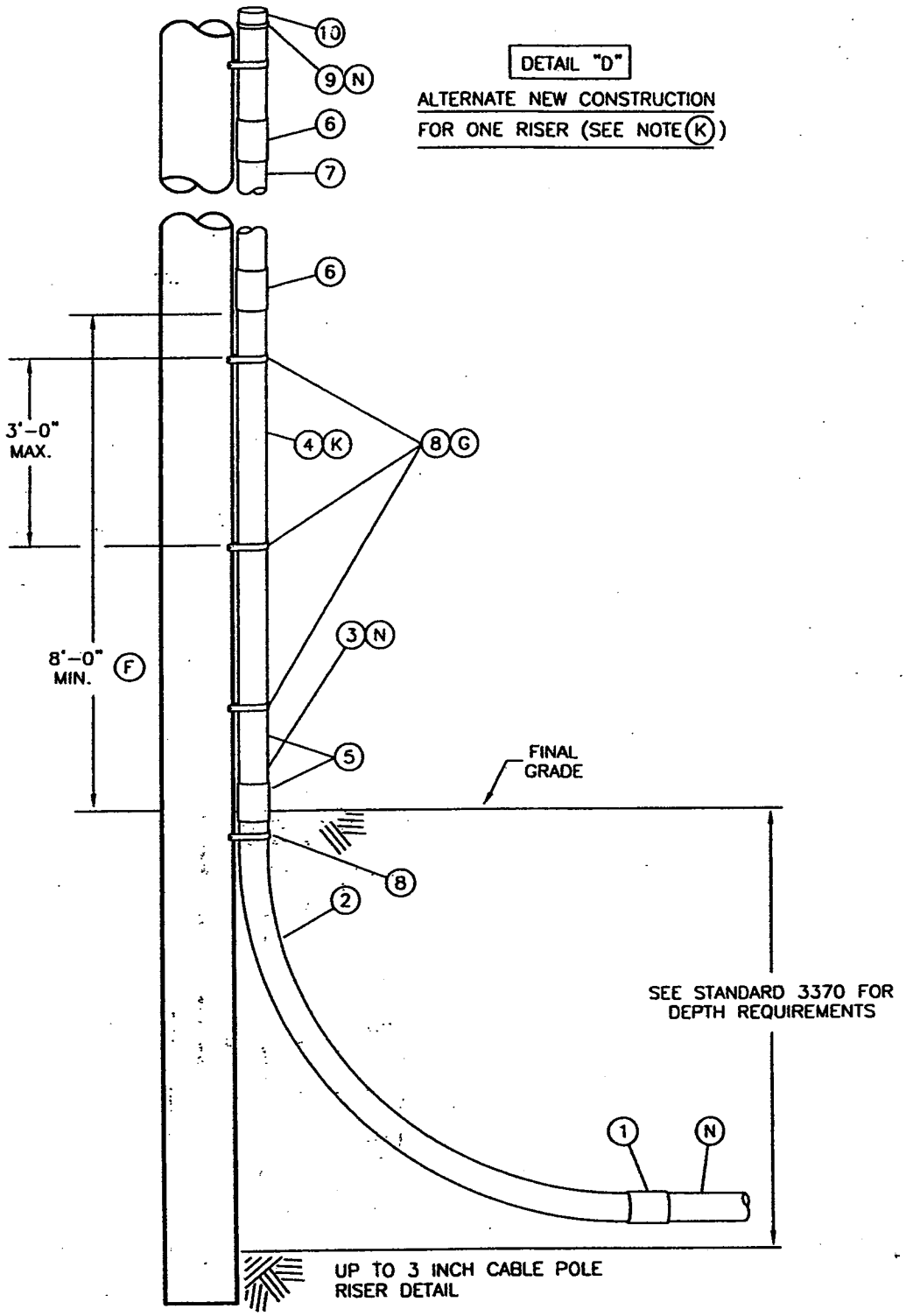

NOTES:

- WHENEVER POSSIBLE, RISER SHOULD BE INSTALLED ON THE SIDE OF THE POLE OPPOSITE TRAFFIC FLOW.
- SPARE CONDUITS SHALL BE CAPPED **JUST ABOVE GROUND LEVEL** TO PREVENT MOISTURE OR WIRE ENTRY AND KEEP DEBRIS OUT. SPARES ARE NOT TO BE CONSIDERED AS A RISER.

SERVICE GUIDE PG. 310.1	Indicates Latest Revision	Completely Revised	New Page	Information Removed

REVISION	SDG&E ELECTRIC STANDARDS	
DATE 1-1-96 APPD PSA 1/2098	CABLE POLE RISER INSTALLATION	~~OH 1404.2~~ UG 4204.2

8-129 (ADDENDUM NO. 2)

BILL OF MATERIAL:

ITEM	DESCRIPTION	QUANTITY	STOCK NUMBER	ASSEMBLY UNITS
1	COUPLING, (SIZE AS REQUIRED)	AS REQ'D	3"__279904 4"__279936 5"__280032	– – –
2	CONDUIT RISER BEND, SCHEDULE 80 (SIZE AS REQUIRED)	AS REQ'D	2"_36" R_321822 3"_36" R_322472 4"_48" R_322480 5"_48" R_322488	2"CP–B 3"CP–B 4"CP–B 5"CP–B
3	REDUCER, PVC, SCHEDULE 80, (SIZE AS REQUIRED)	AS REQ'D	3"_TO 2"_573392 4"_TO 3"_573408 5"_TO 4"_573424	3–2RED 4–3RED 5–4RED
4	CONDUIT RISER, PVC, SCHEDULE 80, (SIZE AS REQUIRED)	AS REQ'D	3"__251552 4"__251584 5"__251592	S80–3" S80–4" S80–5"
5	COUPLING, PVC, SCHEDULE 80	AS REQ'D	3"__280544 4"__280576 5"__280592	– – –
6	COUPLING, PVC, SCHEDULE 40, (SIZE AS REQUIRED)	AS REQ'D	2"__280384 3"__280448 4"__280480 5"__280496	– – – –
7	CONDUIT, PVC, SCHEDULE 40, (SIZE AS REQUIRED)	AS REQ'D	2"__251296 3"__251360 4"__251392 5"__251408	S40–2" S40–3" S40–4" S40–5"
8	STRAP, PIPE, GALVANIZED, 2–16d NAILS, GALVANIZED (SINGLE RISER CONSTRUCTION, 4" AND SMALLER)	AS REQ'D	2"__697856 3"__697920 4"__697952 5"__697984	– – – –
9	GRIP, CABLE SIZE AS REQUIRED FOR PRIMARY RISERS ONLY. (GRIPS ARE NOT REQUIRED ON SECONDARY RISERS) (N)	AS REQ'D		
10	PROTECTOR, NYLON CABLE	AS REQ'D	558720	–
11	BRACKET, LADDER ARM (B)	AS REQ'D	167184	(UG)LA–ARM (OH)RARM/L
12	CHANNEL, DOUBLE, GALV. 24–3/4" x 7/8" x 2–3/4" (A)	AS REQ'D	216700	
13	NUT, CLAMPING CHANNEL, W/SPRING, 1/2"	AS REQ'D	503488	–
14	CLAMP, PIPE, STEEL, GALV., UNISTRUT, 2"	AS REQ'D	229536	CL–2IN
15	BOLT, MACH, GALV, 5/8" x (LENGTH AS REQ'D), 1–SQUARE WASHER & DOUBLE COIL SPRING WASHER (B)	AS REQ'D	OVERHEAD STD. 392	–
16	CLAMP, PIPE, STEEL, GALV., UNISTRUT, 4"	AS REQ'D	229664	CL–4IN
17	CLAMP, PIPE, STEEL, GALV., UNISTRUT, 5"	AS REQ'D	229668	CL–5IN
18	CLAMP, PIPE, STEEL, GALV., UNISTRUT, 3"	AS REQ'D	229632	CL–3IN
19	CHANNEL, GALV., 8" (D)	AS REQ'D	216840	(OH)8RARM

CONDUIT	AL CABLE	GRIP STOCK NO.	
2"	1/C#2 SOL	393984	2G1#2A
3"	2–1/C#2 SOL	394048	3G2#2A
3"	3–1/C#2 SOL	394048	3G3#2A
4"	3–1/C#2 SOL	394104	4G3#2A
4"	3–1/C#2 SOL	394080	4G#2/0
4"	350KCMIL	394100	4G–350
5"	350KCMIL	394102	5G–350
5"	750 KCMIL	394096	5G–750
5"	1000 KCMIL	394098	5G1000

CONDUIT	CU CABLE	GRIP STOCK NO.	
4"	4/0	394080	4G4/0C
5"	500 KCMIL	394096	5G500C

SERVICE GUIDE PG. 310.2	Indicates Latest Revision	Completely Revised	New Page	Information Removed

~~OH 1404.3~~

UG 4204.3

SDG&E ELECTRIC STANDARDS

CABLE POLE RISER INSTALLATION

REVISION

DATE 1–1–94

APPD JLB/RDJ

8-130 (ADDENDUM NO. 2)

INSTALLATION:

(A) **MOUNT FIRST BRACKET LADDER ARM NO LOWER THAN 9 1/2 FEET.** IF THE FIRST BRACKET EXTENDS TOWARD A STREET OR DRIVEWAY, OFFSET THE UNISTRUT CHANNEL TO CLEAR LARGE VEHICLES.

(B) INSTALL AT LEAST ONE LADDER ARM BRACKET FOR EACH COUPLING JOINT OF CONDUIT – 10' MAX. DISTANCE BETWEEN BRACKETS. **ALL LADDER ARM BRACKETS ARE TO BE ATTACHED TO THE POLE WITH BOLTS, NOT LAG SCREWS.**

(C) REFER TO INDIVIDUAL CABLE POLE STANDARD FOR CORRECT MEASUREMENT.

(D) CENTER CONDUIT POSITION SHALL BE USED FOR MULTIPLE SDG&E SECONDARY RUNS OR SDG&E TELECOMMUNICATION CONDUIT. OTHER CONDUIT POSITIONS ON THE FRONT OF THE BRACKET SHALL BE USED FOR A SINGLE OR DOUBLE CONDUIT. THE 8 INCH UNISTRUT CHANNEL (ITEM 19) MAY BE INSTALLED FOR A SINGLE RISER WHERE NO COMMUNICATIONS IS ANTICIPATED.

(F) RISERS OF PLASTIC CONDUIT SHALL BE EPC–80 PVC SCHEDULE 80, FROM THE GROUND LINE TO A LEVEL NOT LESS THAN 8 FEET ABOVE THE GROUND LINE PER G.O. 95 RULE 54.6–E AND SDG&E CONDUIT SIZING REQUIREMENTS.

(G) FOR SINGLE RISER CONSTRUCTION, SEPARATION OF PIPE STRAPS (ITEM 8) SHALL BE 3 FEET MAXIMUM.

(H) USE DETAIL "A" ON PAGE 1404.1/4204.1: **(PREFERRED CONSTRUCTION FOR A SINGLE RISER)**
1. WHEN INSTALLING A SINGLE RISER.
2. WHEN ADDING A SINGLE RISER TO AN EXISTING RISER POLE. AN EXISTING SINGLE SDG&E RISER WOULD REMAIN ON THE POLE UNLESS IT IS CREATING A G.O. 95 INFRACTION. IF AN INFRACTION EXISTS, MOVE THE EXISTING RISER TO THE LADDER ARM BRACKET ALONG WITH THE NEW RISER SHOWN IN DETAIL "B".

(I) USE DETAIL "B" ON PAGE 1404.1/4204.1:
– WHEN INSTALLING MORE THAN ONE RISER.

(J) USE DETAIL "C" ON PAGES 1404.1/4204.1:
– WHEN ADDING A RISER(S) TO AN EXISTING SDG&E RISER POLE. AN EXISTING SINGLE SDG&E RISER WOULD REMAIN ON THE POLE UNLESS IT IS CREATING A G.O. INFRACTION. IF AN INFRACTION EXISTS, MOVE THE EXISTING RISER TO THE LADDER ARM BRACKET..

(K) USE DETAIL "D" ON PAGE 1404.2/4204.2: **(ALTERNATE CONSTRUCTION FOR A SINGLE RISER)**
1. FIELD CONDITIONS DO NOT ALLOW ROOM FOR LADDER ARM BRACKETS, (I.E. CONDUIT WOULD EXTEND INTO THE STREET, SIDEWALK, DRIVEWAY, ETC.). THIS INSTALLATION WOULD BE LIMITED TO ONE SDG&E RISER, UP TO 3" (NO OTHER RISER(S) LARGER THAN 3 INCH WOULD BE ON THE POLE). ONE HALF OF THE POLE MUST REMAIN CLEAR FOR CLIMBING SPACE AND G.O. REQUIREMENTS MUST BE FOLLOWED.
2. WHEN AN EXISTING RISER IS ALREADY ON THE POLE AND IT MAY BE RE–USED. (I.E. REMOVING A STREET LIGHT FUSE BOX FROM A POLE AND NEW CONDUIT WILL CONNECT TO THE EXISTING CONDUIT WHERE THE FUSE BOX WAS LOCATED, CUSTOMER RE–WIRE JOB, ETC.).

(L) ONE RISER ON THE POLE 3 INCH MAX. AND ONE RISER ON THE BACK SIDE OF THE LADDER ARM BRACKET 3 INCH MAX. ARE PERMITTED BACK–TO–BACK. A MAXIMUM OF TWO 4 INCH COMMUNICATIONS RISERS ARE PERMITTED ON THE BACK SIDE OF A LADDER ARM ASSEMBLY. **THE ADJACENT POLE QUADRANT MUST BE VACANT TO INSTALL ANY 4 INCH RISER ON THE BACK OF THE LADDER ARM BRACKET, AND, MUST REMAIN VACANT AFTER INSTALLATION.**

(M) SLURRY ENCASEMENT IS REQUIRED AROUND THE ELBOW(S) FOR 5 INCH PRIMARY CONDUIT(S).

(N) EACH CONDUIT RUN BETWEEN SUBSTRUCTURES, PADS, CUSTOMER SERVICE RISERS, ETC., SHALL BE ONE SIZE CONDUIT CONTINUOUSLY, I.E. NO REDUCERS ARE ALLOWED WITHIN A CONDUIT RUN EXCEPT WHERE THE CONDUIT ENTERS A SUBSTRUCTURE OR ABOVE GROUND LEVEL ON A RISER POLE. IF A 3 INCH RISER IS ALREADY INSTALLED AND THE GRIP SIZE REQUIRES A 2 INCH RISER, A 2" TO 3" REDUCER MAY BE USED TO ACCOMMODATE THE GRIP. THE SAME WOULD APPLY TO OTHER SIZE CONDUITS AS HAS BEEN DESCRIBED. GRIPS ARE NOT REQUIRED ON SECONDARY RISERS.

SERVICE GUIDE PG. 310.3	[X] Indicates Latest Revision	Completely Revised	New Page	Information Removed
REVISION DATE 4–24–01 APPD PSA / VCR	SDG&E ELECTRIC STANDARDS CABLE POLE RISER INSTALLATION			~~OH 1404.~~ UG 4204.

8-131 (ADDENDUM NO. 2)

(O) SPARE CONDUITS

THE TERM "SPARE CONDUIT" REFERS TO AN EMPTY CONDUIT THAT IS SPECIFIED BY THE PLANNER FOR OPERATING AND MAINTENANCE REQUIREMENTS. SPARE CONDUITS SHOULD BE CONSIDERED OR INSTALLED:

1. WHEN REQUESTED BY A CUSTOMER AT HIS OWN EXPENSE, BUT NOT TO EXCEED CONDUIT LIMITATIONS IN THIS STANDARD.

2. WHEN IT IS ECONOMICAL TO INSTALL CONDUIT IN LIEU OF CONCRETE, BUT NOT TO EXCEED CONDUIT LIMITATIONS IN THIS STANDARD.

3. BASED ON FUTURE CONSTRUCTION LIMITATIONS SUCH AS BENEATH BRIDGES, ROADWAYS AND RAILROAD TRACKS, BUT NOT TO EXCEED CONDUIT LIMITATIONS IN THIS STANDARD.

4. IN CONVERSION OR NEW BUSINESS PROJECTS TO ALLOW EASY BYPASS OF THE POLE DURING REMOVAL. CONDUITS INSTALLED FOR THIS PURPOSE SHALL NOT GO UP THE POLE BUT, RATHER, SHALL EXTEND PAST THE POLE A MINIMUM OF 6 FEET.

FUTURE SPARE CONDUITS

THE TERM "FUTURE SPARE CONDUIT" REFERS TO AN EMPTY CONDUIT SPECIFIED BY EITHER THE PLANNER OR DISTRIBUTION PLANNING FOR AREAS WITH GROWTH POTENTIAL. FUTURE FEEDER CONDUIT SPECIFIED BY DISTRIBUTION PLANNING MUST BE SUPPORTED BY THE LONG TERM FEEDER ARRANGEMENT PLAN.

(P) COMMUNICATIONS ONLY POINT OF ATTACHMENT FOR LADDER ARM BRACKET CONSTRUCTION SHALL BE ON **THE BACK SIDE OF THE LADDER ARM BRACKET ASSEMBLY.** (GALVANIZED UNISTRUT PIPE CLAMPS SHALL BE USED TO SECURE THE CONDUIT). COMMUNICATIONS MAY ATTACH ON THE BACK OF THE ASSEMBLY ALONGSIDE SDG&E'S RISER.

REFERENCE:

T. SEE STANDARD 363/4205 FOR POLE STEPS.

U. SEE STANDARD 3944 FOR U.G. SERVICE FROM O.H. FACILITIES, MATERIAL REQUIREMENTS, ETC.

V. SEE STANDARD 1402/4202 FOR POSITIONING OF RISERS INVOLVING MORE THAN ONE UTILITY.

(W) SEE STANDARD 1407/4207 FOR NON-PORCELAIN TERMINAL MOUNTING BRACKET INSTALLATION AND MATERIALS.

(X) SEE STANDARD 1414/4214 FOR 0 – 750V UNDERGROUND SERVICE FROM AN OVERHEAD LINE.

Y. SEE STANDARD 4620 FOR TELECOMMUNICATION INSTALLATION.

Z. PVC RISERS ARE NOT PERMITTED WITHIN THE CLIMBING SPACE PER G.O. 95 RULE 22.2C.

5.13. Where the trench is cut along traffic lanes in streets and alleys, and where width of trench exceeds 28 inches and the depth exceeds five feet, at no time shall more than 2,000 feet of trench be under construction in any one work area. All work shall be confined to not more than 750 feet of trench opened and incompletely backfilled.

5.14. Where width of the excavation does not exceed 28 inches, and the depth does not exceed five feet or where the work area is outside the traffic lanes, 4,000 feet of trench may be under construction in any one work area. There shall not be more than 1,400 feet of trench opened and incompletely backfilled.

5.15. All blasting shall be performed in compliance with the requirements of the State of California Division of Industrial Safety. All blasts shall be blanketed with mats or other approved protection to avoid damage or injury to the public.

5.15.1. Where blasting will take place under or near Company facilities, the Gas General Foreman shall be notified. It shall be his responsibility to notify the affected Company department.

5.16. Dust will be controlled in an acceptable manner.

5.17. Decomposed granite or aggregate sub-base shall be replaced in kind.

5.18. Temporary resurfacing shall be placed within 24 hours after completion of trench backfill and shall be maintained until permanently resurfaced. The temporary surface shall have a minimum thickness of two inches of road-mixed asphalt surfacing.

5.19. Any special instructions listed on the permit for each particular project must be complied with.

6. References

6.1. County of San Diego Public Works Agency – "Special Provisions for Work Done Under Excavation Permit".

6.2. Permit requirements of cities and counties within the SDG&E service territory.

6.3. State of California Division of Highways - "Terms and Conditions Relating to Utility Encroachment".

6.4. Service Planning Manual Procedure 530.

6.5. SDG&E Gas Standard:

- G 8123 "Damage Prevention Program".

8-133 (ADDENDUM NO. 2)

5.3.1. Where applicable, "as-built" permits will be obtained by Land Rights and Acquisition after minor excavation work is complete.

5.4. All excavation work within the public right-of-way requires notification to the County Engineer prior to any work being performed, and also upon completion of the work.

5.5. All work performed under excavation permits is subject to inspection by representatives of the County Engineer.

5.6. Permission must be received from the County Engineer to disturb any monuments of record. All work of resetting any monuments or stakes shall be completed before acceptance of the work.

5.7. If, during the progress of work, it becomes necessary to remove any existing pavement, sidewalk, curb, landscaping, culvert, or other improvement, the improvement shall be replaced or restored in the original location to County of San Diego standards.

5.8. Free and unobstructed access shall be maintained to all mailboxes, fire hydrants, water gates, gas valves, manholes, drainage structures, roadways, driveways, sidewalks, etc.

5.9. Tree roots larger than two inches shall be excavated by hand, tunneled under, and protected. Those roots directly in the path of pipe or duct may be cut. Roots less than two inches may be hand trimmed on the trench side nearest the tree. All cut roots one-half inch in diameter and larger shall be painted with Tree Seal or equivalent.

5.10. Placement of barricades, delineators and other traffic controls shall be in accordance with the State of California "Manual of Warning Signs, Lights and Devices for use in Performance of Work Upon Highways".

5.10.1. Delineators placed in close proximity to the edge of a traffic lane shall be of a material rubber or plastic, that will withstand impact without damage to themselves, the striking vehicle, or passing traffic.

5.11. All traffic control flagmen shall be properly dressed and equipped, and shall be trained to guide traffic.

5.12. Reducing traffic to one lane, and any street or alley closure, has to be authorized by the County Engineer.

5.12.1. The hours of closure may be limited due to peak traffic.

5.12.2. Traffic interruption may be limited to only thirty minutes.

8-134 (ADDENDUM NO. 2)

3. **General Permit Procedures**

3.1. For excavation permit procedures, refer to Service Planning Manual Procedure 530. An excavation permit is obtained if SDG&E excavates in the public right-of-way.

4. **General Excavation Requirements**

4.1. In general, all the cities and county require that the County of San Diego's "Special Provisions For Work Done Under an Excavation Permit" be followed in excavation work.

4.2. In general, all the cities will not allow more than 500 feet of trench open at one time.

4.3. All agencies request that street crossings be made at 90 degree angles to the street improvements.

4.3.1. Electric underground runs may, in some instances, be on a radius.

4.4. In general, all excavation work is done under the supervision of the city or county engineer, depending on the agency, and he has the final authority on questions involving excavation and backfill.

4.5. No street or alley is to be closed except by written permission from the agency involved. The Company District Right of Way Assistant or Right of Way Agent will obtain the agency's permission upon receipt of the written request from the Construction and Operations Centers.

4.5.1. In the event of repair work due to an emergency, telephonic notification to the involved ~~Fire, Police Departments and City~~ Inspection is required.

4.6. All known existing utilities shall be potholed in accordance with Gas Standard G 7451. Refer to Gas Standard G 8123 "Damage Prevention Program" for standby requirements.

5. **County of San Diego Excavation Requirements**

5.1. In general, all the cities and counties require that the County of San Diego's "Special Provisions for Work Done Under an Excavation Permit" be followed in excavation work.

5.2. Work installing gas mains and electric underground requires a permit before construction is started.

5.3. The installation of poles and anchors do not require a permit.

8-135 (ADDENDUM NO.2)

GENERAL EXCAVATION REQUIREMENTS			SDG&E: G 7453
CURRENT VERSION: 1/13/1997	SDGE EDITION: 2000/2001	CODE(S): 192.303, 192.319	

Purpose: **This Standard provides the basic requirements to meet the various governmental agencies' provisions regarding excavations within the public right-of-way.**

1. Definitions

1.1. "Right-of-Way" - A strip of land used generally for a public utility and set aside as an easement or in fee, either by agreement or condemnation.

1.2. "Easement" - A real property, right or interest in the land of another, created by a grant, reservation, agreement or prescription, entitling the company to some use, privilege or benefit, such as to place gas pipelines or roads.

1.3. "Fee ownership" - The most absolute interest one can have in land of indefinite duration and is freely transferable. Fee ownership can be passed by a grant of real property such as a sale.

1.4. "Encroachment" - To commit a trespass (entry or use of another property unless permitted or licensed, constitute unlawful entry), specifically the building of a structure or construction of any improvement(s), partly or wholly on the property of another.

1.5. "Franchise Area" - The dedicated public rights-of-way within which the company is permitted to place its facilities under a franchise agreement with the local governing agencies.

2. Specific Areas of Responsibilities

2.1. The personnel and Sections primarily responsible for gas pipeline facilities in a right-of-way involving private property or a franchise area are:

2.1.1. Real Estate Management Section of Real Estate Operations Department.

2.1.2. Land Rights Acquisition Section of Land Services Department.

2.1.3. Gas Design and Mapping and Gas Field Engineering sections of the Gas Department.

2.1.4. M&R/System Protection Section of the Gas Department.

8-136 (ADDENDUM NO. 2)

B. Shading material shall meet Gas Standard G 7405 or Underground Standard 3370/3371 specifications and must be approved by an SDG&E inspector.

C. Backfill material shall meet the governmental (permitting) agency's requirements and SDG&E standards. (See Underground Standard 3370 note D or Gas Standard D 7403 note D). Rocks greater than 6 inches are not allowed in backfill material.

D. If foreign utilities require encasement, maintain clearances and provide base for gas main.

E. One or more 5 inch primary conduits shall be slurry encased.

F. Minimum compacted shading material over the uppermost gas pipe or conduit shall be 4 inches.

Notes:

1. For slurry backfill, refer to Underground Standard 3365.2 (Gas Standard G 7410).

2. For utility placement, clearances, minimum shading, cover, and compaction, refer to Underground Standard 3370 (Gas Standard D 7403).

8-137 (ADDENDUM NO. 2)

GAS STANDARD
DISTRIBUTION/TRANSMISSION

IMPORTED OR NATIVE BACKFILL		SDG&E: G 7409
CURRENT VERSION: 4/1/1998	SDGE EDITION: 2000/2001	CODE(S): 192.319, 192.325, 192.327, 192.361

Purpose: **This Standard shows typical placement of base, shading, and imported or native backfill material for SDG&E facilities in San Diego county.**

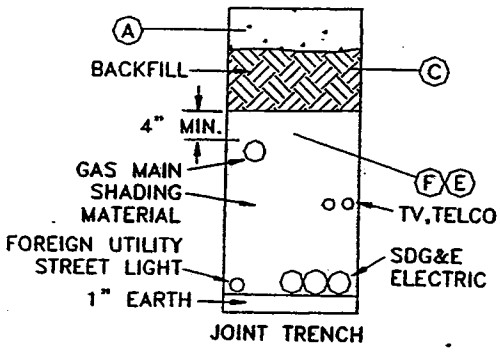

Figure 1

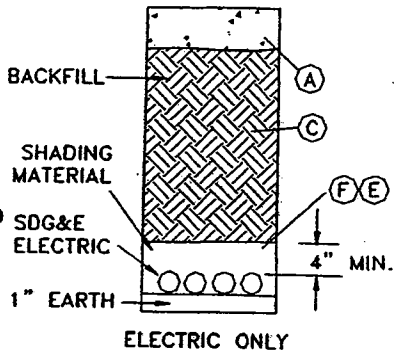

Figure 2

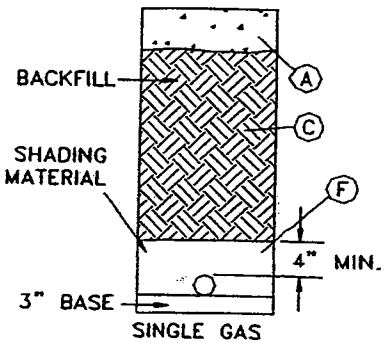

Figure 3

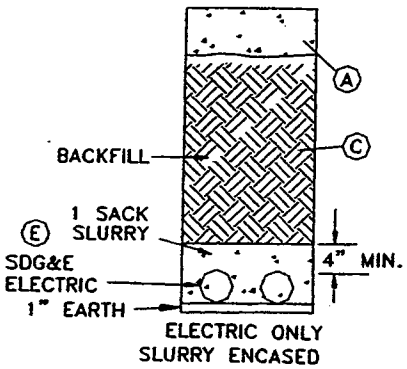

Figure 4

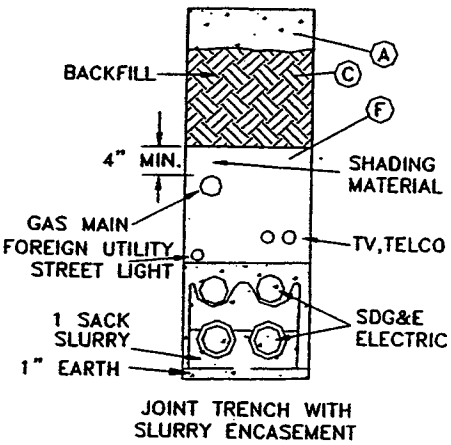

Figure 5

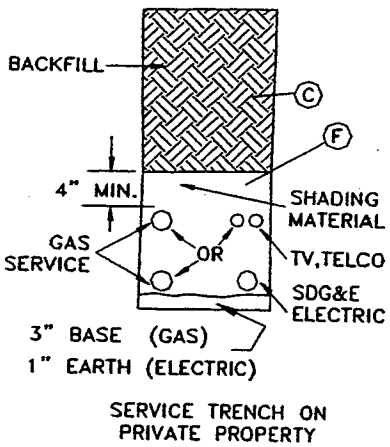

Figure 6

Installation:

A. All trench resurfacing shall be done according to governmental (permitting) agency's requirements.

8-138 (ADDENDUM NO. 2)

3.10. Percent Bituminous - The percentage of bituminous material shall be less than or equal to 3% when tested per ASTM D 2172. (Requirement not necessary for manufactured sand)

3.11. Ph Value - The ph value shall be determined per California Test 643 and the results shall be reviewed and approved by Gas Engineering, Gas Department.

3.12. Electrical Resistivity - The electrical resistivity shall be determined per California Test 643 and the results shall be reviewed and approved by Gas Engineering, Gas Department.

4. References

4.1. ASTM C 136 "Method for Sieve Analysis of Fine and Coarse Aggregates"

4.2. ASTM C 40 "Test method for "Organic Impurities in fine aggregates for Concrete"

4.3. ASTM D 2419 "Test method for Sand Equivalent Value of Soils and Fine Aggregate"

4.4. ASTM D 2488 "Practice for Description and Identification of Soils (Visual-Manual Procedure)

4.5. ASTM D 2172 "Test method for Quantitative Extraction of Bitumen from Bituminous Paving Mixtures"

4.6. California Test 217 "Method of Test for Sand Equivalent"

4.7. California Test 229 "Method of Test for Durability Index"

4.8. California Test 301 "Method of Test for Determination of the Resistance "R" Value of Treated and Untreated Bases, Subbases, and Basement Soils by the Stabilometer"

4.9. California Test 643 "Method for Estimating the Service Life of Steel Culverts"

4.10. CPUC GO 112-E, 49 CFR 192.319

4.11. SDG&E Gas Standards:

- D 7403 "Underground Distribution (UD) Trenches and Utility Positioning - S.D. County"
- G 7453 "General Excavation Requirements

4.12. Appendices: None

8-139 (ADDENDUM NO. 2)

3.2. The base and shading material shall be free of hazardous material.

3.3. Gradation Requirement – Base and shading material shall meet the following gradations when tested as per ASTM C 136

SIEVE ANALYSIS TESTING

SIEVE SIZE	INCHES	PER CENT - %
1/2	(0.500)	100
#4	(0.187)	91-100
#8	(0.0937)	72-100
#16	(0.0469)	50-100
#30	(0.0232)	30-90
#50	(0.0117)	12-46
#100	(0.0059)	1-26
#200	(0.0029)	0-16

Table 1

3.4. As indicated in the Gradation Requirements, Table 1, the largest particle of the base and shading material shall pass through a 1/2 inch sieve. Oblong rocks and sharp angular pieces of rock, which resemble arrowheads, shall be kept to a minimum as determined by the SDG&E inspector.

3.5. Organic Impurities Requirement - A liquid sample of the base and shading material shall not be darker than the #3 Standard Reference Color. A test shall be conducted per ASTM C 40.

3.6. Sand Equivalent Requirement - The sand equivalent of the base and shading material shall be not less than 20 when tested per ASTM D 2419 or California Test 217.

3.7. Durability Index Requirement - The durability Index shall be equal to or greater than 35 when tested per California Test 229.

3.8. Resistance Value Requirement - The R-value shall be equal to or greater than 70 when tested per California Test 301.

3.9. Particle Shape - The material shall be tested for particle shape and angularity per ASTM D 2488 and the results reviewed by the Gas Department.

8-140 (ADDENDUM NO. 2)

- Sand equivalent - California Test 217 or ASTM D 2419

The following additional tests are required for manufactured and recycled sand:

- Durability Index - California Test 229
- Resistance Value - California Test 301
- Particle Shape - ASTM D 2488
- Percent Bituminous - ASTM D 2172 (not required for manufactured sand)
- Ph Value - California Test 643
- Electrical Resistivity - California Test 643

2.3. SDG&E reserves the right to reject material that does not meet this Standard. Material shall be subject to inspection by SDG&E at any time. Upon rejection of the material purchased by SDG&E, the supplier must submit a material analysis report to SDG&E as per Section 5.2 prior to reestablishing supplier on the "Approved Supplier List."

2.4. Manufactured and recycled sand must be tested by an independent professional testing firm utilizing the tests described in Section 5.2 regardless if the supplier applies to be placed on the "Approved Supplier List." The test results must be provided to SDG&E for review and approval.

2.5. Recycled sand is limited for use with polyethylene pipe due to its potential corrosiveness with steel pipe.

2.6. Existing native material does not have to be tested by an independent professional testing firm if in the opinion of the inspector, it meets this Standard.

2.7. The requirements of governmental agencies (permitting agencies) shall be followed when more restrictive than this Standard.

2.8. Appropriate eye and respiratory equipment must be worn to avoid injuries when handling base and shading material. (See SDG&E Employee Safety Handbook).

3. Technical Requirements

3.1. The base and shading material may consist of natural sand, manufactured sand, recycled sand, existing native material, or combinations.

8-141 (ADDENDUM NO. 2)

GAS STANDARD
DISTRIBUTION/TRANSMISSION

SPECIFICATIONS FOR BASE (PADDING) AND SHADING MATERIAL			SDG&E: G7405
CURRENT VERSION: 6/1/1999	SDGE EDITION: 2000/2001	CODE(S): 92.319 & 192.361	

PURPOSE: **This Standard defines the minimum requirements for acceptance of imported and existing native material used for base and shading of SDG&E gas distribution and transmission pipelines.**

1. Definitions

1.1. "Supplier" - Manufacturer, vendor, contractor or developer who supplies base and shading material for gas and/or electric underground facilities.

1.2. "Base (Padding)" - A layer of select materials, normally screened sand, placed in the bottom of the trench for the purpose of providing uniform support of the utility underground facilities and protection from irregularities, rock projections or other features which could damage the utility installation.

1.3. "Shading" - A layer of select material, normally screened sand, to surround the utility facilities after the utility is installed, for the purpose of protecting the installation from damage by the backfill material.

1.4. "Manufactured Sand" - Material made by crushing existing native material.

1.5. "Recycled Sand" - Material made by crushing concrete and asphalt obtained from prior excavations.

1.6. "SDG&E" - San Diego Gas & Electric, San Diego, California 92112-4150.

1.7. "ASTM" - American Society for Testing and Materials.

2. General Requirements

2.1. Base and shading material must meet the requirements of this Standard.

2.2. For the supplier to be placed on the "Approved Supplier List" for base and shading material purchased for use by SDG&E crews or SDG&E contract crews, each material must be tested by an independent, professional testing firm. The results of these tests shall be provided to SDG&E.

The following tests shall be utilized for the above base and shading evaluations:

- Sieve analysis - ASTM C 136
- Determination of maximum particle elongation
- Organic impurities - ASTM C 40

8-142 (ADDENDUM NO. 2)

Submitted to Applicant by
L. Donohue

SDGE

A Sempra Energy utility℠

General Conditions for Underground Electric Distribution, Service Systems Construction and Gas Trench

PROJECT WORK ORDER NUMBER AND PROJECT TITLE
wo # 2818650
E. Mission Rd. 20A T&C Muni Trench

CONSTRUCTION / TRENCH INSPECTIONS
PH: (760) 432-5805

MARK-OUT 1-800-227-2600

NOTICE

ALL WORK DONE PURSUANT TO THE ATTACHED MUST BE ACCOMPLISHED IN COMPLIANCE WITH THE FEDERAL AND STATE OF CALIFORNIA OCCUPANTIONAL SAFETY AND HEALTH ACT.

ONE COPY TO BE KEPT AT PROJECT SITE

106-35140F 1292

8-143 (ADDENDUM NO. 2)

1.0 SCOPE OF GENERAL CONDITIONS

2.0 DEFINITION OF TERMS

3.0 CONTRACT DOCUMENTS

4.0 INSPECTION OF WORK AND INTERPRETATION OF CONTRACT DOCUMENTS

5.0 SDG&E'S RIGHT TO DO WORK

6.0 SCHEDULING

7.0 SURVEY AND EASEMENTS

8.0 PAVEMENT REMOVAL AND REPLACEMENT

9.0 EXCAVATIONS

10.0 INSTALLATION OF CONDUIT

11.0 BACKFILL AND COMPACTION

12.0 SUBSTRUCTURES

13.0 CABLE INSTALLATIONS (NEW)

14.0 SAFEGUARDS

15.0 CHANGES IN WORK

16.0 PHASING FOR ENERGIZING

17.0 DRAWINGS AND PRINTS

18.0 RELATIONSHIP OF PARTIES

19.0 FINAL ACCEPTANCE

20.0 WARRANTY

21.0 PERMITS AND LICENSES

22.0 INDEMNITY

23.0 PUBLIC RELATIONS

24.0 UNION LABOR IF APPLICABLE

25.0 RISK OF LOSS OR DAMAGE

26.0 NOTICE OR DEMAND

1.0 SCOPE OF GENERAL CONDITIONS

These General Conditions apply to new underground electric facilities and gas trench where the facilities being installed by an Applicant or by an applicant's contractor are for operations by SDG&E.

2.0 DEFINITION OF TERMS

The following terms in these General Conditions shall be applied as follows:

2.1 "Agent" - Those persons authorized to act for or represent the Applicant or SDG&E.

2.2 "Applicant" - The party or parties contracting with SDG&E for underground facilities and to perform work described in these General Conditions.

2.3 "Contract Documents" - The Contracts, Agreements, Specifications, General Conditions, SDG&E Standards, drawings, permits and other papers for the purpose of construction or pertaining to construction of underground electric facilities and gas trench.

2.4 "Day or Days" - Normal SDG&E work days (Monday through Friday) unless otherwise specified.

2.5 "Excavation" - Trenching, boring, and removal of soil required for the installation of substructures, all necessary backfilling including required imported backfill material and removal of trench spoil, and acceptable surface repair to the local governing authority's specifications.

2.6 "Final Acceptance" -. SDG&E's acceptance of all work performed by the Applicant includes "as-built" drawings and reconciliation of all material obtained for SDG&E.

2.7 "Final Grade" - The grade after paving and landscaping are completed.

2.8 "Finish Grade" - The grade shown on plans.

2.9 "Improvements"- The requirements of either the governing municipality or SDG&E which will ensure protection for SDG&E facilities and provide verification of finish grade. Improvements include, but are not limited to, curbs, sidewalks, berms, barricades, bridle or pedestrian paths, raised planters or parking lot berms in residential, commercial, manufacturing, or industrial projects, when these improvements are specified adjacent to SDG&E's facilities.

2.10 "Inspector" - The SDG&E employee assigned to inspect and accept or reject work on the basis of compliance or lack thereof with the Contract Documents, SDG&E standards, specifications and policies.

2.11 "Issued and Released" - When the specifications have been issued to the Construction Department and all related holds (monies, contracts, Right of Ways, etc.) have been removed.

2.12 "Landowner" - Public or private entity, or a natural person or persons, whose property is affected in any way by construction performed by Applicant.

2.13 "Project Coordinator" - The SDG&E employee assigned to coordinate projects through construction. The Project Coordinator will work with the SDG&E Inspector and Applicant to coordinate the scheduling of SDG&E crews.

2.14 "SDG&E" - San Diego' Gas & Electric Company (including its contractors, subcontractors, employees, representatives or agents).

2.15 "SDG&E Standards" - SDG&E Gas and Electric Construction Standards, including SDG&E's "Service Guide" (available upon request).

8-145 (ADDENDUM NO. 2)

2.16 "Specifications" - The construction drawings (including any revisions, supplements or SDG&E approved field changes) furnished to the Applicant detailing the work be performed.

2.17 "Substructures" - Includes, but are not limited to, manholes, handholes, vaults, pads (for transformers, terminators or fuse cabinets), grounding grids and other structures needed to accommodate cables, connections, transformers and appurtenances.

2.18 "Vault Book" - SDG&E transformer vault specifications.

2.19 "Work" - The performing of all labor and the furnishing and installing of all material and equipment, necessary to accomplish all the duties and obligations imposed by the Contract Documents and Specifications.

3.0 CONTRACT DOCUMENTS

3.1 These Contract Documents are mutually binding on all and the Applicant must be thoroughly familiar with them. Technical trade terminology shall retain well known meanings. All Applicant work responsibility and any work reasonably inferred necessary to produce the intended results, shall be supplied by the Applicant. Specified dimensions (except as provided in section 15.0) shall govern. Work not specified shall be performed in the same manner as similar work specified. Specific details take precedence in the manner of construction.

4.0 INSPECTION OF WORK AND INTERPRETATION OF CONTRACT DOCUMENTS

4.1 All work and materials shall be of SDG&E approved manufacture class or grade specified in the Contract Documents. It shall be the Applicant's responsibility to thoroughly familiarize all of its Agents with the contents of the Contract Documents and to accurately advise SDG&E of its construction schedule. SDG&E will be represented in the field by an Inspector, and all work and material shall be subject at all times to inspection by the Inspector.

4.2 Applicant is required to call the number on the cover sheet for inspection of his work by 2:30 p.m. one workday prior to the date inspection is requested. The Inspector will inspect each completed stage of Applicant's work including: trenching, substructure installation, conduit installation, backfill, compaction, and cabling. As each stage is completed, the Inspector will approve it. If SDG&E crews are needed, they will be dispatched as available after the Inspector has verified that the Applicant has satisfactorily performed his portion of the work.

4.3 Any workmanship or material supplied by the Applicant which does not meet the criteria specified in the Contract Documents may be rejected by the Inspector whose decisions shall be final and conclusive. The decision of SDG&E shall be final as to all matters of interpretation of the Contract Documents.

4.4 Any workmanship or material rejected by the Inspector shall be replaced by Applicant at Applicant's expense. Inspections and final acceptance shall not relieve the Applicant's obligation to complete the work in accordance with the Contract Documents and SDG&E Standards.

5.0 SDG&E'S RIGHT TO WORK

If the Applicant fails to perform the work in accordance with the standards, within the prescribed time period, or any obligation imposed by the contract documents, SDG&E, except as indicated below, after giving seven days written notice to the Applicant, may take over and finish the Applicant's work or may correct any defects at the Applicant's expense. If SDG&E is unable to collect reimbursement for its cost of work after 30 days from completion of the work, the actual cost may be deducted from Applicant's refundable monies on deposit with SDG&E, or, at its option, SDG&E may recover such cost by claim against the surety on the performance bond furnished by the Applicant.

8-146 (ADDENDUM NO. 2)

6.0 SCHEDULING

After receipt of written notification from SDG&E that construction orders have been released and issued, the Applicant shall immediately advise SDG&E of the construction schedule, arrange a pre-construction meeting with the Project Coordinator and verbally confirm the start date two working days in advance of trenching.

6.1 All work by Applicant shall be coordinated with SDG&E in a manner that will permit SDG&E or its Agents to perform its work without delay and in an efficient manner throughout the period of construction without being required to reschedule its construction forces after starting the field installation.

6.2 The Applicant understands that trenching and backfilling must be coordinated with the installation of facilities such as gas piping and/or equipment by SDG&E. The Applicant shall contact the Project Coordinator to avoid SDG&E construction schedule delays. The Inspector will specify the amount of clear open trench for SDG&E work. Inspector and Construction Crew work will be performed during normal business hours. The Applicant shall continue trenching to allow the project to be completed in an efficient manner. Joint trench agreements with other underground utilities must be approved by SDG&E before the start of construction and coordinated to avoid conflicts between construction forces.

6.3 The Applicant should call Underground Service Alert (1-800-277-2600) for mark-out two working days before trenching. The Applicant must locate all existing facilities before construction and protect them throughout the construction period. Gas and electric facilities will not be installed until all wet utilities have been installed and backfilled. Pressurized sprinklers and irrigation lines installed after SDG&E's facilities must maintain the minimum clearances specified in SDG&E Standards.

6.4 Applicant shall report to Project Coordinator any damage to any facilities resulting from the construction and shall file a complete written report with SDG&E of the surrounding circumstances within 24-hours of the incident or by the end of the next working day.

7.0 SURVEY AND EASEMENTS

The Applicant shall be responsible for establishing and maintaining alignment and finish grade for SDG&E substructures and trenches throughout the construction of the project. SDG&E will survey, obtain easements and stake trench positions when easements dictate a definite route on private property, or in a dedicated street position.

8.0 PAVEMENT REMOVAL AND REPLACEMENT

8.1 Applicant agrees, that when trenching or excavating in paved streets or sidewalks, all cutting, removal and replacement of pavement or concrete shall be performed by methods which meet the requirements of all governmental authorities having jurisdiction.

8.2 Applicant agrees that any curtailment or rerouting of traffic necessitated by Applicant's work within streets or sidewalk areas shall be coordinated with all governmental authorities having jurisdiction.

9.0 EXCAVATIONS

9.1 Excavations for substructures shall be made to such dimensions and grade lines as are necessary to perform the work shown by Specifications and to a depth that will provide the ground coverage between the top of the conduit entering the substructures and finish grade directed in the appropriate SDG&E Standards. Applicant shall verify in writing that all substructures are set to finish grade prior to backfilling. The Applicant shall maintain finish grade stakes for all four corners of all substructures until final backfill and compaction has been completed and accepted by Inspector. Should any adjustments to substructures be required due to variations in final grade not previously submitted to SDG&E, all costs for adjustments made by SDG&E shall be borne by the Applicant.

9.2 Trenches shall be excavated in accordance with location and alignment shown on the Specifications and to provide minimum width and depth necessary to install the substructures, electric lines or gas pipe as specified in SDG&E Standards.

9.3 Bottom of excavations and trenches shall be free of rocks, dirt clods and pockets and shall be graded with a base so that sags will not occur in any conduit or gas pipe placed therein as specified in SDG&E Standards.

9.4 Any excavation made to an incorrect depth shall be adjusted to the correct depth and thoroughly compacted by Applicant in accordance with the compaction requirements of the Contract Documents.

9.5 Where excavations occur in soil, which is, in the opinion of the Inspector, unstable and unsuitable for adequately supporting the conduit, gas pipe or substructures, reinforcement shall be required and constructed to accommodate the individual case as determined by SDG&E.

9.6 The Applicant shall not place excavated soil where it would pose a hazard to pedestrian or vehicular traffic or interfere with the installation of SDG&E facilities. The Applicant is responsible for the disposal of all excess soil.

9.7 If SDG&E encounters hazardous or toxic material while performing construction on the project, SDG&E will halt work immediately, and it will be the Applicant's responsibility to remove and or clean up all hazardous toxic material. SDG&E will have no liability or obligation whatsoever to clean up, remove or remediate any hazardous or toxic materials discovered during the course of construction, unless the material were deposited through the negligence of SDG&E.

9.8 The location of all excavation is subject to change as necessitated by conflicts, obstacles, or field conditions revealed by actual examination during construction and Applicant agrees to pay any additional trenching, excavation, backfill, compaction, pavement replacement or other costs required by such changes in location.

9.9 When padmount equipment is to be installed in a location which requires equipment barriers or retaining walls, Applicant shall install them in accordance with SDG&E Standards.

9.10 Retaining walls may be used as an acceptable alternative to establishment of proper grade. They shall be provided and installed at Applicant's expense per SDG&E Standards. If retaining walls are required for any reason during the warranty period, they also shall be provided and installed at Applicant's expense.

10.0 INSTALLATION OF CONDUIT

THE FOLLOWING PROVISIONS APPLY TO APPLICANT'S INSTALLATION OF CONDUIT:

10.1 Conduits shall be installed in the trench in the alignment shown on the Specifications and all material used shall be those specified in SDG&E Standards.

10.2 On approval of Inspector, ground cover may be reduced where the specified minimum ground cover cannot be obtained in crossing over storm drains, foreign substructures, or other obstacles.

10.3 Extreme care shall be exercised to ensure that foreign matter does not enter the conduits during installation, or at any other time thereafter.

10.4 When such responsibilities are shown on the Specifications, cable pole conduits shall be SDG&E approved and installed per SDG&E Standards unless otherwise instructed by the Inspector.

10.5 Manufactured horizontal bends in the conduit shall be installed according to SDG&E Standards. Should field conditions warrant a lesser radius, the Applicant shall obtain SDG&E approval.

10.6 All concrete, unless otherwise permitted by Inspector, shall be ready mixed and shall meet the requirements of SDG&E Standards.

10.7 The installation of conduit by Applicant must be coordinated with SDG&E or its Agent to permit the installation of substructures and any conduit which may be installed by SDG&E. After the substructures are placed in position, the conduits shall be terminated in the substructure per SDG&E Standards.

10.8 Service conduit stubs shall be extended and marked three feet beyond the substructure or retaining wall according to SDG&E Standards.

10.9 Any trench or excavation of 5 feet or more in depth, which will be entered by SDG&E employees, requires spoil to be placed a minimum of 24 inches from edge of excavation. Depths of less than 5 feet require a minimum clearance of 12 inches. Shoring or sloping may be required in depths less than 5 feet and is required for depths 5 feet or more (OSHA).

10.10 Gas and electric facilities in conflict with other construction must be shown on plans provided by Applicant, and SDG&E must be notified prior to trenching.

10.11 Street light circuits, CATV and telephone positions must be verified by the Applicant with each serving agency and installed to their specifications in addition to SDG&E Specifications.

10.12 Each run between substructures, pads, customer's service, risers, etc., shall be one size conduit continuously, i.e., no reducers are allowed except where the conduit enters the substructure or above the ground level on a riser pole. Deviations must be approved by SDG&E.

10.13 All plastic conduit shall comply with SDG&E Standards, identified by manufacturer's marking, and be verified that it is an approved conduit. Conduit found to be defective or not on approved supplier's list shall not be acceptable.

10.14 Installation of electric conduits with concrete substructures must be coordinated with SDG&E. All conduits shall enter a substructure in a horizontal plane, using bottom set of knockouts first, exception being a 3315, 3316 and 3324 manhole in which part of the job package are pages showing conduit placement to assure correct cable training and connections. Conduits shall be terminated in substructures per SDG&E Standards. Open conduit ends shall be sealed during construction to prevent contamination inside conduit. Conduits must be watertight and mechanically sound at entry point.

10.15 Core boring can only be authorized by SDG&E to insure against structural damage. All work must be performed per SDG&E Standards. Conduits used with core boring must be grouted.

10.16 Mandreling of conduit must be performed by the installer in the presence of SDG&E Inspector. The conduit installer must provide a 3/16-inch polypropelene pullrope in each conduit. The rope shall be approved by SDG&E and have a minimum average tensile strength of 720 lbs. Pullrope tails of 24 inches shall be secured at each end of the conduit.

11.0 BACKFILL AND COMPACTION

When Applicant's responsibility under the Contract Documents includes base, shading, backfill and compaction, the following provisions apply:

11.1 Backfill, base and shading shall be made with materials and by methods which will meet the requirements of all applicable codes, ordinances and SDG&E Standards. It must be approved by SDG&E Inspector.

11.2 Compaction shall be performed in accordance with governmental agencies and shall have a minimum of 90% relative compaction.

11.3 When gas piping is installed and not energized, shading will be done the same day, if practical, but not later than the following calendar day. Gas mains must be shaded and backfilled before they are energized. Gas services, when energized, must be covered during the same working day. During construction, new service lines must be made safe from normally anticipated hazards. Energized service lines left unattended must have a minimum of 12 inches cover on private property and 18 inches on public property. Completion of the backfill must be made in a timely manner.

11.4 Shading between the different levels of jointly used trench must be compacted with reasonable care to prevent damage to the facilities installed and shall be compacted before proceeding with the next utility installation.

11.5 Soil filled sacks or redwood timber breakers shall be installed across trenches as required by the Inspector in banks exceeding 25% slope. Water diversion berms shall be cut diagonally across trenches and working strips on banks exceeding 35% slope. The Inspector may require cement slurry backfill on slopes as specified in SDG&E Standards.

12.0 SUBSTRUCTURES

12.1 GENERAL

Unless otherwise specified, all substructures, and related hardware including, but not limited to, frames, covers, barrier posts, ladders, ground rods, ground grids and cable supports shall be provided and installed by the party responsible for installing the substructures and shall comply with SDG&E Standards and SDG&E Vault Books. All of the substructures and related hardware used are to be approved by SDG&E. The above facilities, if applicable, will be installed at locations specified by the Specifications and in a manner prescribed by SDG&E Standards.

12.2 PRIMARY MANHOLES AND VAULTS

The location of conduit entrances or recesses and sumps shall be as shown in SDG&E Standards. Manhole or Vault entrances shall be installed as shown on the specifications. Neck extensions shall be ordered with the manhole or vault and shall be adjusted to permit installation of the cover at final grade.

12.3 PRIMARY HANDHOLES

When Applicant's responsibility under the Contract Documents includes all or a portion of the substructures, Applicant shall adjust the top section and lid to final grade per SDG&E Standards. Conduits entering handholes shall be terminated in accordance with section 10.8.

Where any substructures are to be installed by SDG&E or its contractors and Applicant is responsible for excavation, finish grade must be established to within 3 inches before substructure can be set. The top section and lid shall be adjusted to final grade by SDG&E or its contractor if less than a 3-inch adjustment is required. The developer is responsible for

8-150 (ADDENDUM NO. 2)

maintaining the excavations for substructures for a period of five days. If SDG&E has not installed the substructures within the five-day period, SDG&E assumes responsibility for the excavation.

12.4 TRANSFORMER AND EQUIPMENT PADS AND SECONDARY HANDHOLES

Prior to the installation of these facilities, the Applicant must complete the improvements adjacent to these facilities including barrier posts. Proper compaction and final grade must be established by Applicant and inspected by SDG&E for the transformer and equipment pads. Applicant must complete the required excavation for secondary handholes and site preparation for pads.

12.5 COMPLETION OF IMPROVEMENTS

The Applicant must complete improvements (including proper compaction, final grade, excavation and site preparation) adjacent to pads and secondary handholes prior to scheduling SDG&E crews for installation and energizing of facilities. If improvements are to be installed in segments, a minimum of 10 feet of improvements fronting electric facilities is required. Any damaged substructure shall be replaced by the Applicant before the system is energized.

13.0 CABLE INSTALLATIONS

THE FOLLOWING PROVISIONS APPLY TO APPLICANT'S INSTALLATION OF CABLE:

13.1 It shall be Contractor's responsibility to protect the cable and other material furnished by SDG&E against damage. Cable pulling methods shall be subject to the approval of the Project Coordinator. If cable or associated materials are damaged due to Contractor's negligence or faulty equipment, Contractor shall replace damaged section in a manner satisfactory to SDG&E and at no additional cost to SDG&E. All sections of cable that are damaged by the application of grips shall be discarded.

13.2 All cable ends shall be sealed to effectively prevent moisture from entering the cable.

13.3 HANDLING REELS

Inspection Contractor shall inspect each reel upon receipt to determine whether or not visible damage has occurred during transit and/or storage.

Loading and Unloading Reels shall be handled in such manner as to prevent smashing, nicking, cutting or other damage to the cable. When unloading reels from trucks, reels shall not be dropped to the ground or allowed to roll freely down ramps. Cranes or other equipment of adequate capacity shall be utilized, and care shall be taken to avoid damage to the cable or reels.

Final Inspection After removing lagging or other protective covering from reels, Contractor shall examine outside layer of each reel to be sure that the cable is undamaged and that no nails, staples, or other sharp objects which would damage the cable during unreeling protrude on the inside of the reelheads.

Empty Reels Contractor shall return all empty returnable reels prior to completion of the work as instructed by the Project Coordinator. Contractor shall dispose of all empty non-refundable reels.

13.4 SPLICES

Unless otherwise directed, splices shall be made in accordance with SDG&E Standards.

The Project Coordinator shall be present when all primary splices are performed, and shall reject those splices which do not comply with SDG&E Standards. Failure to notify the Project Coordinator is justification for rejection of the splices not performed in the Project Coordinator's presence.

The tools required for splicing the cable shall be furnished by Contractor and approved by SDG&E.

13.5 PROOF TESTING

All primary installations shall be proof-tested prior to permanent connection to the distribution system. The Project Coordinator shall be present during all proof testing. Failure to notify the Project Coordinator is justification for rejection of the tests not performed in the Project Coordinators presence.

The devices and methods utilized by Contractor for proof testing shall depend upon the circuit configuration and type of equipment. Testing methods shall be in accordance with approved SDG&E procedures.

14.0 SAFEGUARDS

All material, work, traffic control and work areas shall comply with all applicable Federal, State, and local safety laws or rules that are necessary to protect Applicant's and SDG&E's employees, the public, and workmen during the time of construction. Applicant shall take all steps to protect property adjacent to the construction project from damage resulting from work specified and performed hereunder.

15.0 CHANGES IN WORK

Modification of the Specifications may be made in writing by mutual agreement between the Applicant and SDG&E. Requests for changes shall be directed to Planner. Such changes may cause delays in construction and require an engineering fee and revision to the Specifications. Costs resulting from work changes are the Applicant's responsibility under section 20.0. Minor changes for adverse field conditions may be approved in writing at the job site by the Inspector to facilitate construction.

16.0 PHASING FOR ENERGIZING (Applies only when cabling is installed by SDG&E)

When SDG&E and the Applicant agree before the completion of final Specifications, portions of the underground facilities may be phased *for* energizing before Final Acceptance provided the phasing does not delay completion of the entire project, SDG&E retains control of the energized portion, and the energized area is compatible with the system design and SDG&E's safety practices. Energizing portions of systems shall in no way relieve the Applicant of any of its duties.

17.0 DRAWINGS AND PRINTS

17.1 Applicant shall at all times maintain a set of the current Specifications at the job site, and these will at all times be available for Inspection by the Inspector who shall have access thereto on request. Applicant shall maintain at the job site any related project plans (e.g. alignment and finish grade of street improvements) approved by the governmental agencies having jurisdiction.

~~17.2 Prior to energizing, Applicant shall provide as-built drawings of facilities installed by the~~ Applicant or his contractor per SDG&E Standards.

18.0 RELATIONSHIP OF PARTIES

In assuming and performing the obligations of these Contract Documents, Applicant is acting as an independent contractor. Applicant shall assume full responsibility for the ownership, custody, and control of work and facilities to be constructed. All persons employed by Applicant in connection herewith shall be employees of Applicant. SDG&E's inspections, or any suggestions or objections made by SDG&E shall not constitute or be construed as an exercise of management or supervision over the work, nor shall it be construed as acceptance of the work, or any part thereof, as it progresses, nor shall it limit or affect the right of SDG&E to reject any part or all of the work when completed in case the same does not conform to Contract Documents.

19.0 FINAL ACCEPTANCE

Final acceptance by SDG&E will be made when Applicant has provided "as-built" drawings and satisfactorily completed all work and improvements as called for in the Contract Documents including reconciliation of materials. SDG&E shall notify Applicant in writing of final acceptance of the work. Failure or neglect on the part of SDG&E to reject inferior work during the construction period shall not be construed to imply acceptance of such work nor to preclude its right to reject it. Applicant shall be required to correct all defects which become evident at any time prior to final acceptance of Applicant's work by SDG&E. The cost of all such repairs, material, labor, and overheads shall be borne by Applicant. Ownership, custody, and control of the work and facilities shall pass to SDG&E only upon Final Acceptance.

20.0 WARRANTY

The Applicant expressly represents and warrants that all work performed and all materials used are free from defects of workmanship and conform to the Applicant's Contract obligations. This warranty shall commence upon Final Acceptance and end one year from that date. The Applicant shall pay the actual cost to SDG&E for any breach of this warranty corrected by SDG&E (including labor, material and overheads). If SDG&E is unable to collect for the work after 30 days from completion, the actual cost may be deducted from the Applicant's refundable monies on deposit with SDG&E. SDG&E may recover such cost by claim against the surety on the performance bond furnished by the Applicant.

21.0 PERMITS AND LICENSES

The Applicant shall obtain and pay for all permits and licenses required by governing agencies before starting any work. In the event any governmental agency imposes conditions which necessitate any changes in the trench or conduit system shown on the Specifications, the Applicant agrees not to proceed with any work affected by the conditions until SDG&E has completed the necessary redesign of construction drawings and new agreement documents have been signed by SDG&E and the Applicant. New agreements shall be the standard agreements in effect at the time the changes a made.

22.0 INDEMNITY

Applicant will indemnify, defend, hold SDG&E its employees and agents harmless from any and all claims, demands, loss, liability or expense (including attorneys' fees) for injury to or death of any person, or damage to or destruction of any property, in any way resulting from or connected with the performance of the work by Applicant's Contractor, its agents, employees, or subcontractors regardless of the negligence of SDG&E except in those cases where SDG&E has been solely negligent or SDG&E's willful misconduct caused the damage or injury. For purposes of this indemnification, SDG&E's inspections, objections or comments shall NOT be construed as an exercise of management or supervision.

23.0 PUBLIC RELATIONS

The Applicant shall maintain a good public image. Excess soil, litter and debris around the work area shall ~~be removed during construction. Due precaution shall be observed to avoid damage to lawns, trees, shrubs,~~ flowers, fences and other property. All landowners and tenants shall be notified in advance when work interferes with their use of walks, driveways, roadways or entrances. Any disagreements, problems or adverse criticism in connection with the work from area landowners, tenants, the general public or public officials shall be reported promptly to the Project Coordinator.

8-153 (ADDENDUM NO. 2)

24.0 UNION LABOR IF APPLICABLE

If for any reason, any work is performed by Applicant upon facilities that are at the time of work by Applicant, owned and maintained by SDG&E, Applicant agrees that such work shall be done in compliance with the terms and conditions of that amended Agreement between SDG&E and Local Union 465, International Brotherhood of Electrical Workers, or such other agreements as may be entered into between the Applicants' Contractor and bonafide unions of international organizations affiliated with the American Federation of Labor and Congress of Industrial Organizations or other bonafide labor organizations.

25.0 RISK OF LOSS OR DAMAGE

The Applicant must take proper care to protect, and avoid any loss or damage to, material and/or equipment furnished by the Applicant or by SDG&E until Final Acceptance. Any damage, injury or loss shall be repaired, corrected or replaced by the Applicant at his sole expense. If the Applicant fails to do so, SDG&E may complete the work and deduct such costs from any amounts due or to become due to Applicant, or SDG&E may, at its option, recover such cost by claim against the surety on the performance bond furnished by Applicant.

26.0 NOTICE OR DEMAND

Any notices or demand which may or must be given by either party to the other hereunder unless otherwise specified shall be made in writing and shall be deemed to have been duly given when delivered by personal service, or 24 hours after it is deposited for mailing at San Diego, California, by certified United States mail, postage prepaid, addressed as follows, or to such other place as the parties may hereafter in writing direct:

TO UTILITY:

San Diego Gas & Electric Company
P.O. Box 1831
San Diego, CA 92112-4150

Attention: _____

TO APPLICANT:

Address _____

_____

_____

_____

Attention: _____

MISSION AVENUE 20A CONVERSION HILL AVE TO MAIN AVE
TRENCH, CONDUIT & SUBSTRUCTURES

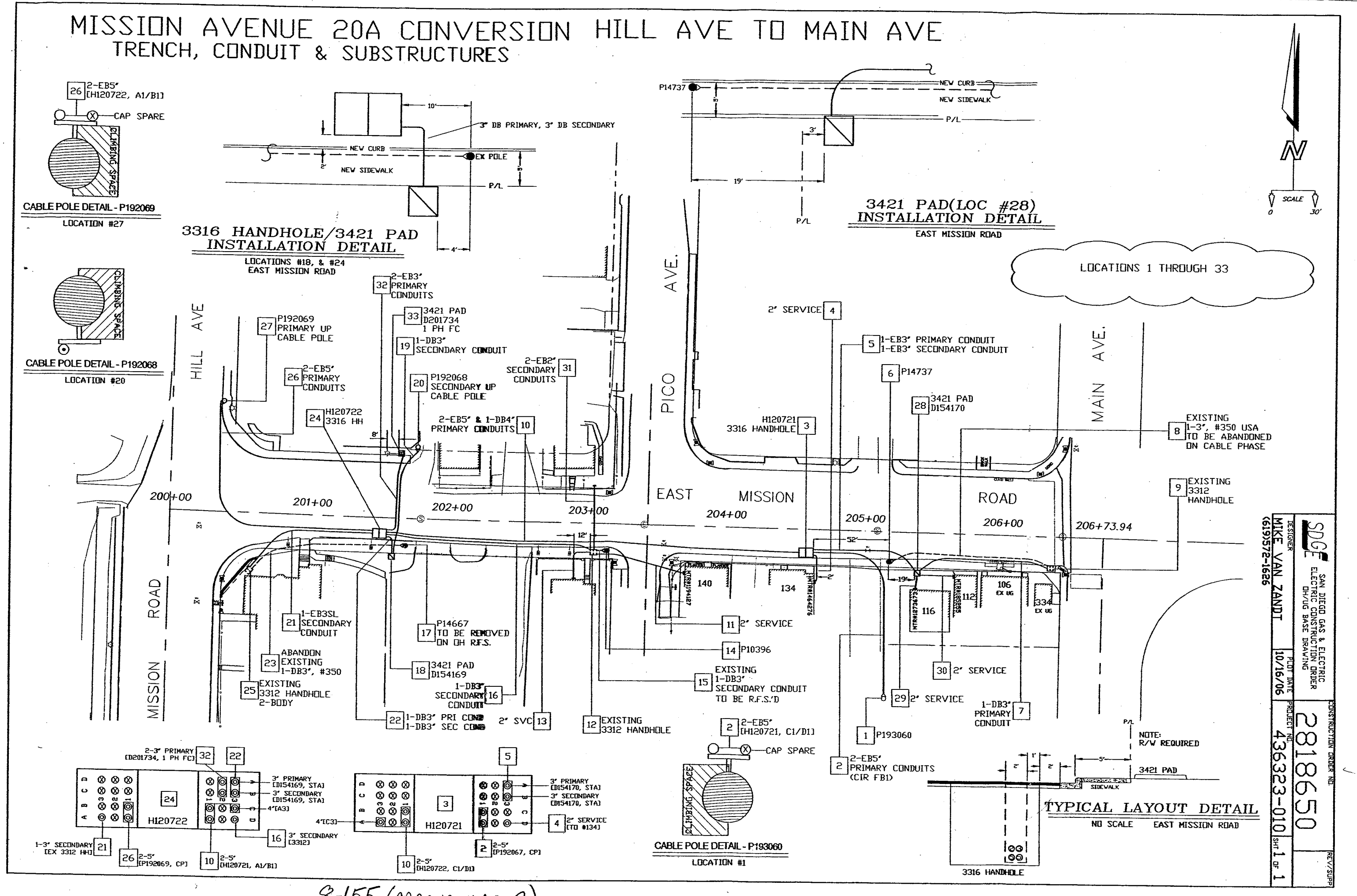

DESIGNER
MIKE VAN ZANDT
(619)572-1626

SDGE SAN DIEGO GAS & ELECTRIC
ELECTRIC CONSTRUCTION ORDER
OH/UG BASE DRAWING

PLOT DATE 10/16/06

CONSTRUCTION ORDER NO. 2818650

PROJECT NO. 436323-010

SHT 1 OF 1

REV/SUPP

C:\Documents and Settings\kbarley\My Documents\DRAWINGS\20A Mission Rd\TRCD2818650a.dwg, 10/16/2006 1:37:58 PM, \\FP-PC03\P-00965

8-155 (ADDENDUM NO. 2)

TELCO
P1 TO P2
PLACE 2-4" DUCT(S)
*PM=533 4C

TELCO
1 TO A
PLACE 2-2" DUCT(S)
PLACE 1-4" DUCT(S)
*PM=10 4C

TELCO
A TO B
PLACE 2-2" DUCT(S)
NPM=21

JOINT
B TO C
PLACE 1-2" DUCT(S)
NPM=30

JOINT
B TO J
PLACE 1-2" DUCT(S)
NPM=41

TELCO
J TO D
PLACE 1-2" DUCT(S)
NPM=123

JOINT
1 TO E
PLACE 1-2" DUCT(S)
*NPM=51

JOINT
A TO 2
PLACE 1-4" DUCT(S)
*PM=141 4C

TELCO
2 TO F
PLACE 1-2" DUCT(S)
PLACE 2-4" DUCT(S)
*PM=22 4C

JOINT
F TO G
PLACE 1-2" DUCT(S)
NPM=22

JOINT
F TO H
PLACE 2-4" DUCT(S)
PM=24 4C

JOINT
H TO I
PLACE 1-4" DUCT(S)
PM=39 4C

JOINT
1 TO P3
PLACE 3-4" DUCT(S)
*PM=102 4C

JOINT
1 TO P4
PLACE 2-4" DUCT(S)
*PM=235 4C

JOINT
H TO 3
PLACE 1-4" DUCT(S)
*PM=55 4C

JOINT
3 TO K
PLACE 1-2" DUCT(S)
*NPM=17

JOINT
3 TO L
PLACE 1-2" DUCT(S)
*NPM=35

JOINT
3 TO 4
PLACE 1-4" DUCT(S)
**PM=119 4C

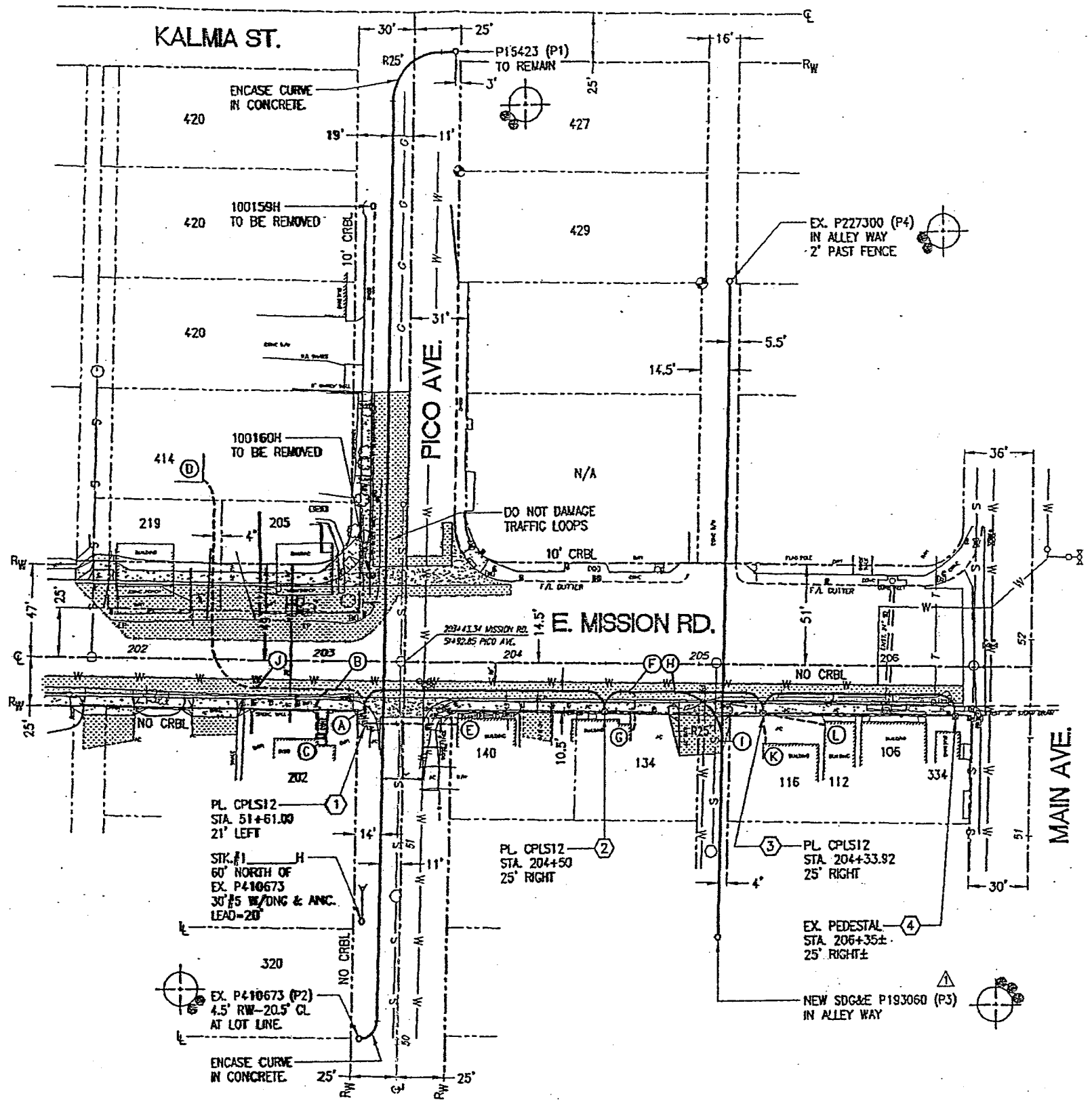

TRENCHING DATA	TELCO	JOINT	TOTAL
ASPHALT	000	000	000
CONCRETE	000	000	000
DIRT	000	000	000
TOTAL	701	893	1594

FOR PERMITTING PURPOSES ONLY. DATA IS FOR THIS SHEET ONLY.

CL	= CENTER LINE	HH	= HAND HOLE
DNG	= DOWNGUY	MH	= MANHOLE
ANC	= ANCHOR	V	= VERIFY
LL	= LOT LINE	PL	= PLACE
RW	= RIGHT OF WAY	PED	= PEDESTAL
CRBL	= CURB LINE	CAB	= CABINET
G	= GAS	PM	= PLANT MEASUREMENT
E	= ELECTRIC	NPM	= NO PM
T	= TELEPHONE	RT	= RIGHT
TV	= CABLE	LT	= LEFT
S	= SEWER	TR	= TRENCH FEET
SD	= STORM DRAIN		= SURVEY MONUMENT

SBC

0 20 40 80
SCALE: 1"=40' ON A 27"x37" SHEET

1. ALL SUBSTRUCTURES SHOWN ARE AN APPROXIMATE LOCATION ONLY, PER AVAILABLE RECORDS. CONTRACTOR SHALL VERIFY LOCATION OF ALL SUBSTRUCTURES PRIOR TO EXCAVATION.
2. TRENCHING MUST CONFORM TO ALL LOCAL MUNICIPAL STANDARDS.
3. 2 DAYS BEFORE EXCAVATION CALL DIG ALERT AT 1-800-422-4133.
4. * INCLUDES (1) 3'R, 5'L SWEEP. ** INCLUDES (2) 3'R, 5'L SWEEPS.
5. PLAN ALTERATIONS MUST BE PREAPPROVED BY SBC INSPECTOR.
6. THIS PROJECT REQUIRES EXCAVATION CONSTRUCTION WILL UTILIZE AND IMPLEMENT ALL BEST MANAGEMENT PRACTICES (BMP'S) AS REQUIRED TO ENSURE COMPLIANCE WITH SBC POLICY LETTER ISSUES FEBRUARY 21, 2003 BY ENVIRONMENTAL MANAGEMENT CONCERNING STORM WATER PERMITTING AND STORM WATER POLLUTION PREVENTION PLANS (SWPPPS) AND IN ACCORDANCE WITH THE CLEAN WATER ACT (1965) AND EPA REGULATIONS PUBLISHED IN 1990 AS MODIFIED BY THE PHASE II RULE IN 1999.
7. TYPICAL CONDUIT RADIUS SHALL BE 9' UNLESS NOTED OTHERWISE.

PERMITS: COUNTY OF SAN DIEGO-EXCAVATION
RECORDS: CAD FILE PROVIDED BY COUNTY
THOMAS BROS. MAP: 1027-F2

DESIGNER:	ROLSETH	760-489-3641
SBC INSPECTOR:	GORZO	760-489-3002
DATE COMPLETED:		09/15/2005
REVISED:		09/15/2005

GED\CO DB(24)
EXCH\CO FALLBROOK
CABLE ENGINEER OSTRANDER 619-574-4427
ENGINEER'S ARC N/A
TYPE OF CONSTRUCTION
RULE 32 SCH. A2 CONVERSION
JOB NUMBER 5641358
DWG 1 OF 1 REV. NO. 1

8-156 (ADDENDUM NO. 2)

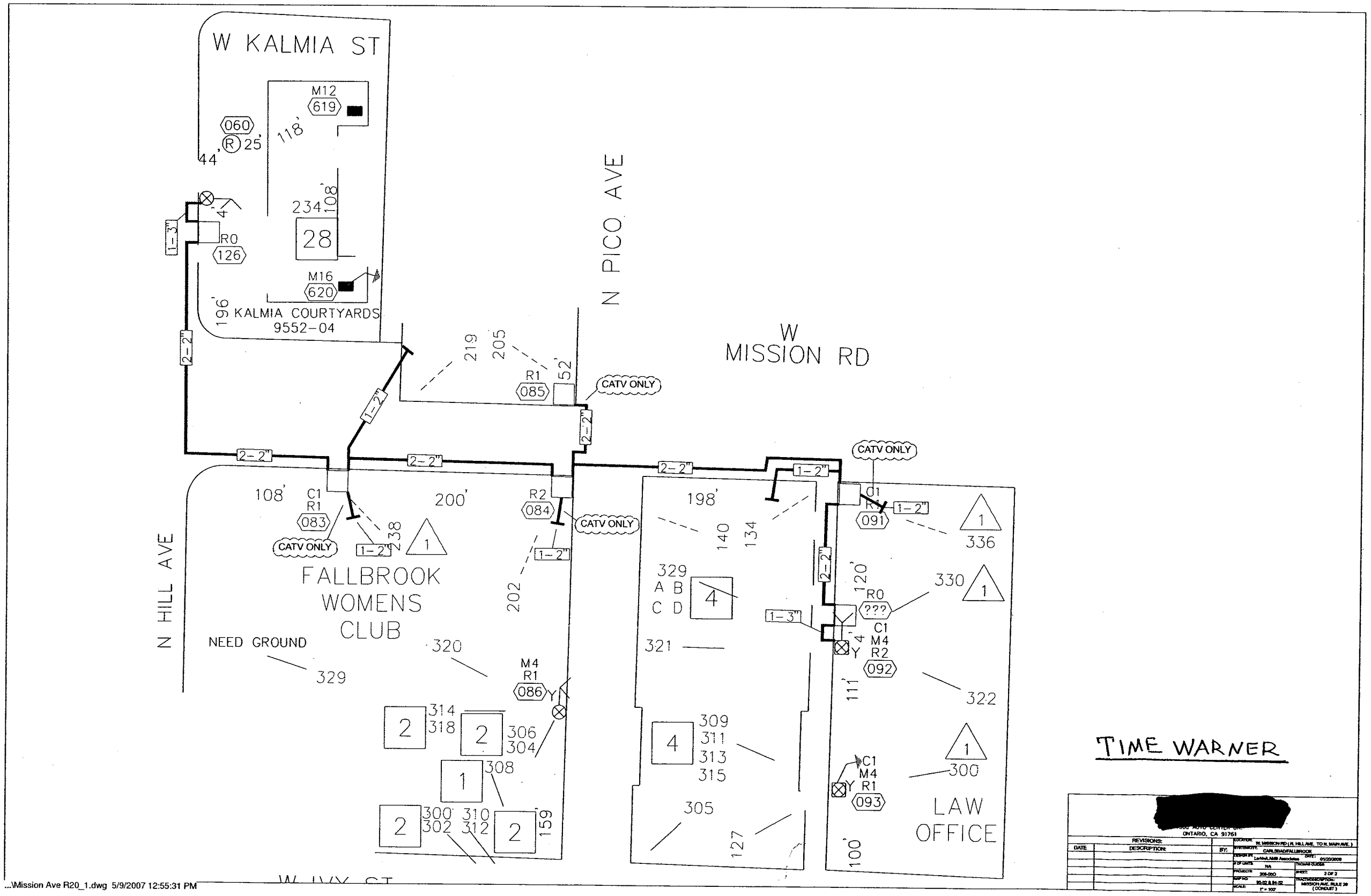

TIME WARNER

[redacted]
ONTARIO, CA 91761

REVISIONS:			
DATE	DESCRIPTION:	BY:	LOCATION: W. MISSION RD (N. HILL AVE. TO N. MAIN AVE.)
			SYSTEM/SITE: CARLSBAD/FALLBROOK
			DESIGN BY: Larkhull, Aldrich Associates DRAFT: 01/20/2006
			# OF USERS: N/A THOMAS GUIDES
			PROJECT#: 208-050 SHEET: 3 OF 3
			MAP NO: 10-12 & 11-12 FRACTIONDESCRIPTION: MISSION AVE. RULE 20 (CONDUIT)
			SCALE: 1" = 100'

...\Mission Ave R20_1.dwg 5/9/2007 12:55:31 PM

8-157 (ADDENDUM NO. 2)

FOR REDUCED PLANS
ORIGINAL SCALE IS IN INCHES

PLANS	BY	DATE
DESIGNED	JRH	
CHECKED	JRH	
DESIGNEATED	JRH	

SPECIAL CONDITIONS NOTE:

** COUNTY SHALL NOT STAGE OR STORE ANY EQUIPMENT OR MATERIALS WITHING 20 FEET OF EXISTING DUPLEX PROPERTY TO THE NORTH OF THE SUBJECT PROPERTY. THE EASEMENT AREAS WILL BE SLOPED TO PROVIDE DRAINAGE, AND EROSTION PROTECTION SHALL BE USED DURING CONSTRUCTION. ALL AFFECTED AREAS ARE TO BE HYDRO-SEEDED UPON COMPLETION OF CONSTRUCTION ACTIVITIES. ACCESS TO RESIDENTS OF 414-416 N. PICO SHALL BE MAINTAINED THROUGH THE VACATED ALLEY AT THE WESTERLY EDGE OF PARCEL NO. 2001-0056-B.

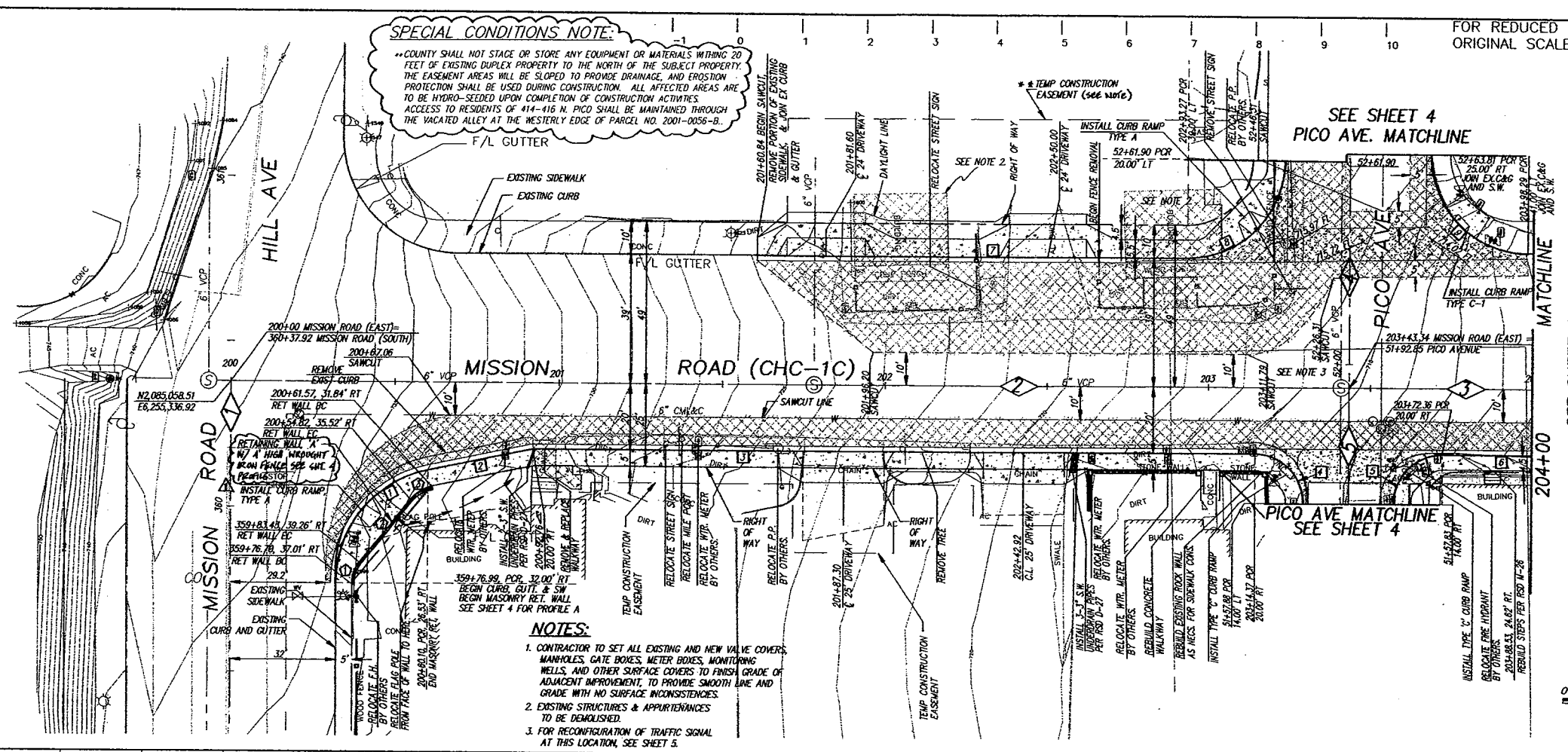

NOTES:

1. CONTRACTOR TO SET ALL EXISTING AND NEW VALVE COVERS, MANHOLES, GATE BOXES, METER BOXES, MONITORING WELLS, AND OTHER SURFACE COVERS TO FINISH GRADE OF ADJACENT IMPROVEMENT, TO PROVIDE SMOOTH LINE AND GRADE WITH NO SURFACE INCONSISTENCIES.
2. EXISTING STRUCTURES & APPURTENANCES TO BE DEMOLISHED.
3. FOR RECONFIGURATION OF TRAFFIC SIGNAL AT THIS LOCATION, SEE SHEET 5.

CENTERLINE DATA

No.	△ / BEARING	RADIUS	DISTANCE	REMARKS
1	N01°08'21"E		191.00'	RS 1835 MISSION RD. (NORTH)
2	N88°46'00"W		343.34'	CHC-1C MISSION RD. (EAST)
3	N88°47'04"W		56.66'	CHC-1C MISSION RD. (EAST)
4	N01°10'34"E		69.05'	PICO AVE. (N)
5	N01°10'34"E		25.02'	PICO AVE. (S)

CURB DATA

No.	△ / BEARING	RADIUS	DISTANCE	REMARKS
1	78°33'54"	35.00'	48.00'	P.C.C. CURB & GUTTER, TYPE G
2	N29°42'21"E	–	32.66'	P.C.C. CURB & GUTTER, TYPE G
3	N88°46'00"W	–	221.61'	P.C.C. CURB & GUTTER, TYPE G
4	89°56'34"	15.00'	23.55'	P.C.C. CURB & GUTTER, TYPE G
5	90°02'22"	15.00'	23.57'	P.C.C. CURB & GUTTER, TYPE G
6	N88°47'04"W	–	27.64'	P.C.C. CURB & GUTTER, TYPE G
7	N88°46'00"W	–	131.45'	P.C.C. CURB & GUTTER, TYPE G
8	90°03'36"	30.00'	47.15'	P.C.C. CURB & GUTTER, TYPE G
9	89°57'38"	30.00'	47.10'	P.C.C. CURB & GUTTER, TYPE G

A.C. DIKE DATA

No.	△ / BEARING	RADIUS	DISTANCE	REMARKS
1	N07°21'10"W	–	20.00'	A.C. DIKE, TYPE A
2	N09°42'24"E	–	20.00'	A.C. DIKE, TYPE A

RETAINING WALL A DATA

No.	△ / BEARING	RADIUS	DISTANCE	REMARKS
1	41°55'07"	10.00'	7.26'	RSD C-2, W/ 4' WROUGHT IRON FENCE
2	N40°25'18"E		24.49'	"
3	39°16'57"	10.00'	6.86'	"

SAWCUT NOTE:

CONTRACTOR SHALL SAWCUT AND REMOVE EXISTING PAVEMENT AS SHOWN ON PLANS AND AS REQUIRED TO FORM NEW CURB AND GUTTER. CONTRACTOR SHALL COMPACT 6" NATIVE MATERIAL UNDER STRUCTURAL SECTION TO A MINIMUM OF 95% RELATIVE COMPACTION. CONTRACTOR SHALL APPLY TACK COAT TO ALL EXPOSED VERTICAL A.C. AND GUTTER SURFACES.

Basis of Bearings
California Coordinate System Zone 6
NAD 83

REGISTERED PROFESSIONAL ENGINEER
JAMES R. HETTINGER
No. 31756
EXP. 12-31-06
CIVIL
STATE OF CALIFORNIA

9-1-06
JAMES R. HETTINGER
R.C.E. 31756
REGISTRATION EXPIRES: 12/31/06
DATE

GRAPHIC SCALE
0' 10' 20' 30' 40' 60' 80'
5' 15'
SCALE 1"= 20'

NOLTE
BEYOND ENGINEERING
13676 AVENUE OF SCIENCE, SUITE 100 SAN DIEGO, CA. 92128
858.240.9500 TEL 858.240.9502 FAX WWW.NOLTE.COM

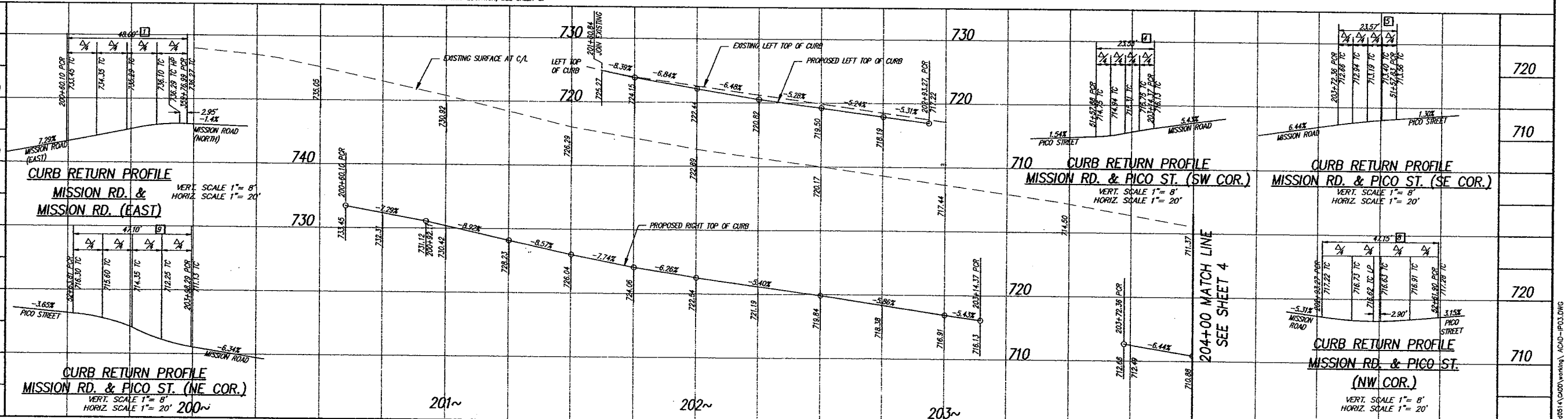

COUNTY OF SAN DIEGO
DEPARTMENT OF PUBLIC WORKS
5555 OVERLAND AVENUE, SAN DIEGO, CA 92123-1295

REVISIONS	BY	APPROVED	DATE
1 ADD INSTALL 4' HIGH WROUGHT IRON FENCE.	MP	SMB	05-16-07
2 ADD NOTE.			

COORDINATE INDEX
442 N. 1689 E.
CONST. COMPL.
FIELD REVISIONS

EAST MISSION ROAD IMPROVEMENTS
IN THE VICINITY OF FALLBROOK
PLAN AND PROFILE STA. 200+00 TO 204+00

SCALE: HOR. 1"=20' VERT. 1"=8'
W.A. 2C6001 R.S. 2102
FILE NO.
SHEET 3 OF 9 SHEETS

(Addendum No. 2)

2:43 p.m. 01/16/06 N:\S6051K\CADD\working\ACAD-IP03.DWG

NOTES:

1. FOR RECONFIGURATION OF SIGNAL FACILITIES AND STREET LIGHTS AT THIS LOCATION, SEE SHEET 6.
2. CONTRACTOR TO SET ALL EXISTING AND NEW VALVE COVERS, MANHOLES, GATE BOXES, METER BOXES, MONITORING WELLS, AND OTHER SURFACE COVERS TO FINISH GRADE OF ADJACENT IMPROVEMENT, TO PROVIDE SMOOTH LINE AND GRADE WITH NO SURFACE INCONSISTENCIES.

SAWCUT NOTE:

CONTRACTOR SHALL SAWCUT AND REMOVE EXISTING PAVEMENT AS SHOWN ON PLANS AND AS REQUIRED TO FORM NEW CURB AND GUTTER. CONTRACTOR SHALL COMPACT 6" NATIVE MATERIAL UNDER STRUCTURAL SECTION TO A MINIMUM OF 95% RELATIVE COMPACTION. CONTRACTOR SHALL APPLY TACK COAT TO ALL EXPOSED VERTICAL A.C. AND GUTTER SURFACES.

SPECIAL CONDITIONS NOTE:

***COUNTY SALL NOT STAGE OR STORE ANY EQUIPMENT OR MATERIALS ON THE GRANTOR'S PROPERTY. COUNTY SHALL MAINTAIN ACCESS TO THE PROPERTY AT ALL TIMES DURING CONSTRUCTION.

FOR REDUCED PLANS
ORIGINAL SCALE IS IN INCHES

PLANS	BY	DATE
DESIGNED	JRH	
CHECKED	JRH	
DELINEATED	JRH	

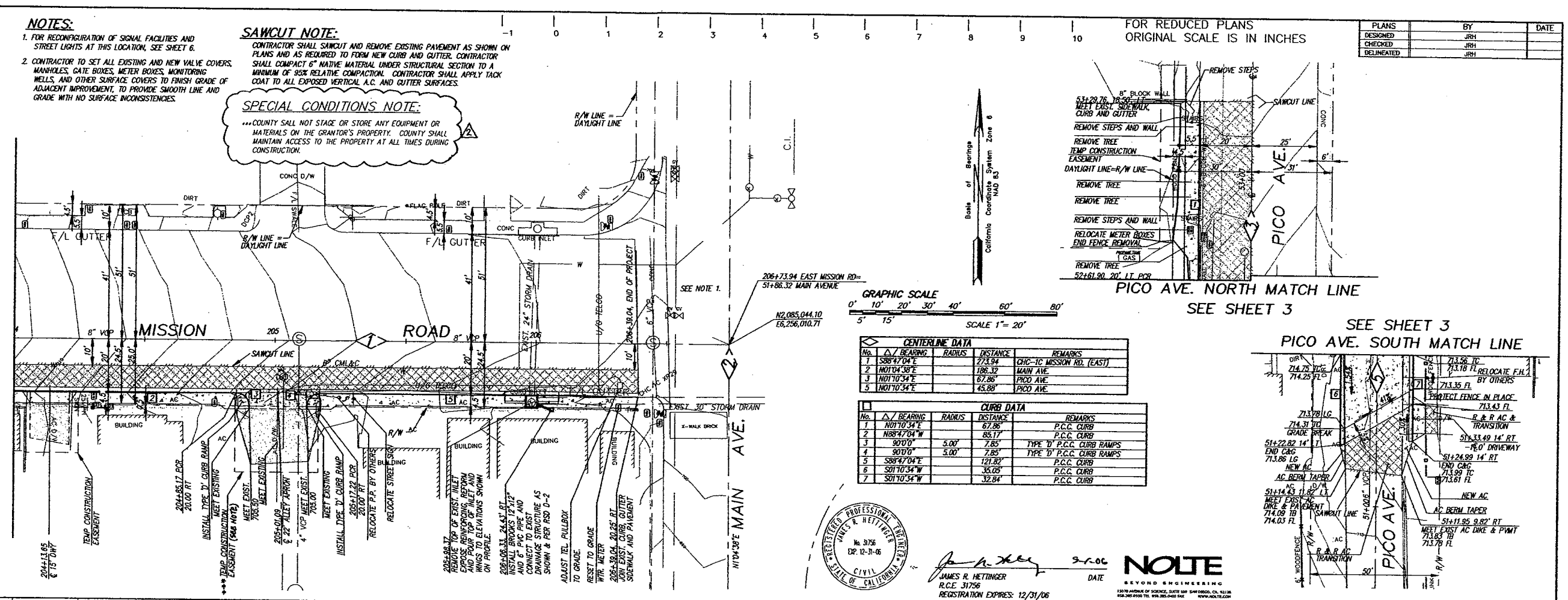

CENTERLINE DATA

No.	BEARING	RADIUS	DISTANCE	REMARKS
1	S88°47'04"E		273.94	CHC-TC MISSION RD. (EAST)
2	N01°04'36"E		186.32	MAIN AVE.
3	N01°10'34"E		67.86'	PICO AVE.
5	N01°10'34"E		45.88'	PICO AVE.

CURB DATA

No.	BEARING	RADIUS	DISTANCE	REMARKS
1	N01°10'34"E		67.86'	P.C.C. CURB
2	N88°47'04"W		85.17'	P.C.C. CURB
3	90°0'0"	5.00'	7.85'	TYPE 'D' P.C.C. CURB RAMPS
4	90°0'0"	5.00'	7.85'	TYPE 'D' P.C.C. CURB RAMPS
5	S88°47'04"E		121.82'	P.C.C. CURB
6	S01°10'34"W		35.05'	P.C.C. CURB
7	S01°10'34"W		32.84'	P.C.C. CURB

JAMES R. HETTINGER
R.C.E. 31756
REGISTRATION EXPIRES: 12/31/06
DATE 9-1-06

NOLTE
BEYOND ENGINEERING
1310 10 AVENUE OF SCIENCE, SUITE 100 SAN DIEGO, CA. 92130
858.240.9500 TEL 858.285.0402 FAX WWW.NOLTE.COM

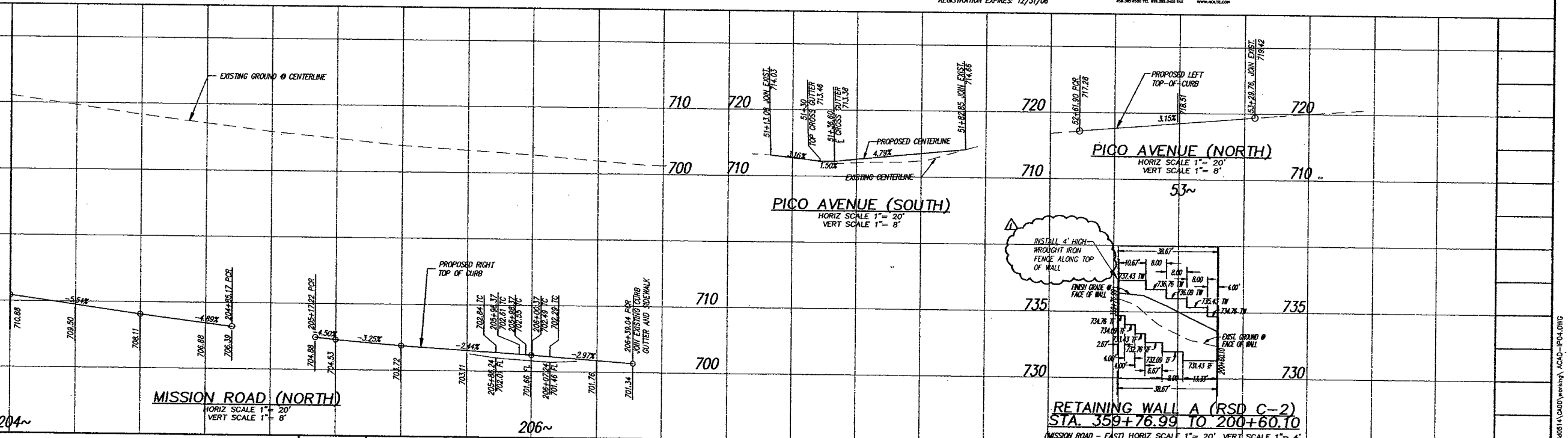

COUNTY OF SAN DIEGO
DEPARTMENT OF PUBLIC WORKS
5555 OVERLAND AVENUE, SAN DIEGO, CA 92123-1295

REVISIONS	BY	APPROVED	DATE
1 ADD INSTALL 4' HIGH WROUGHT IRON FENCE	MP	SYB	06-16-07
2 ADD NOTE			

COORDINATE INDEX
442 N. 1689 E.
CONST. COMPL.
FIELD REVISIONS

EAST MISSION ROAD IMPROVEMENTS
IN THE VICINITY OF FALLBROOK
PLAN AND PROFILE STA 202+70 TO 206+75

SCALE: HOR. 1"=20' VERT. 1"=8'
W.A. 206001 R.S. 2102
FILE NO.
SHEET 4 OF 9 SHEETS

2:44 p.m. 01/18/06 W:\5d2514\CAD\wesling\ACAD-IP04.DWG

(Addendum NO. 2)