VAULT COPY

SAN DIEGO AREA

REGIONAL STANDARD DRAWINGS

STANDARD DRAWINGS FOR AGENCIES IN THE SAN DIEGO REGION

Recommended by the Regional Standards Committee
Maintained and Published by the San Diego County
Department of Public Works

MAY, 1992

COUNTY OF SAN DIEGO
DEPARTMENT OF PUBLIC WORKS

INDEX OF DESIGN STANDARDS

NUMBER	TITLE
DS-1	TYPICAL ROADWAY SECTIONS
DS-2	HILLSIDE RESIDENTIAL STREET, ALTERNATE No. 1
DS-3	HILLSIDE RESIDENTIAL STREET, ALTERNATE No. 2
DS-4	HILLSIDE RESIDENTIAL STREET, ALTERNATE No. 3
DS-5	TEMPORARY TURN-AROUND AT DEAD-END STREET
DS-6	TURNAROUND AND CALCULATIONS
DS-7	ASPHALT CONCRETE DRIVEWAY
DS-8	LOT GRADING
DS-9	FENCING CUT BANKS
DS-10	GRADING OF SLOPES
DS-11	REQUIRED SETBACKS
DS-12	CONSTRUCTION PLAN SYMBOLS
DS-13	STANDARD STREET SIGN
DS-14	DIP SECTION (FOR PRIVATE STREETS)
DS-15	STREET KNUCKLE
DS-16	CLEAR SPACE MARKERS

STAN[illegible]RD DRAWINGS FOR A[illegible] IN THE [illegible]
Recommended by the Regional Standards Committee
Maintained and [illegible]ified by the San Diego Co[illegible]
Department of Public Works
MAY, 1982

TYPICAL ROADWAY SECTION

SYMMETRICAL ABOUT CENTERLINE

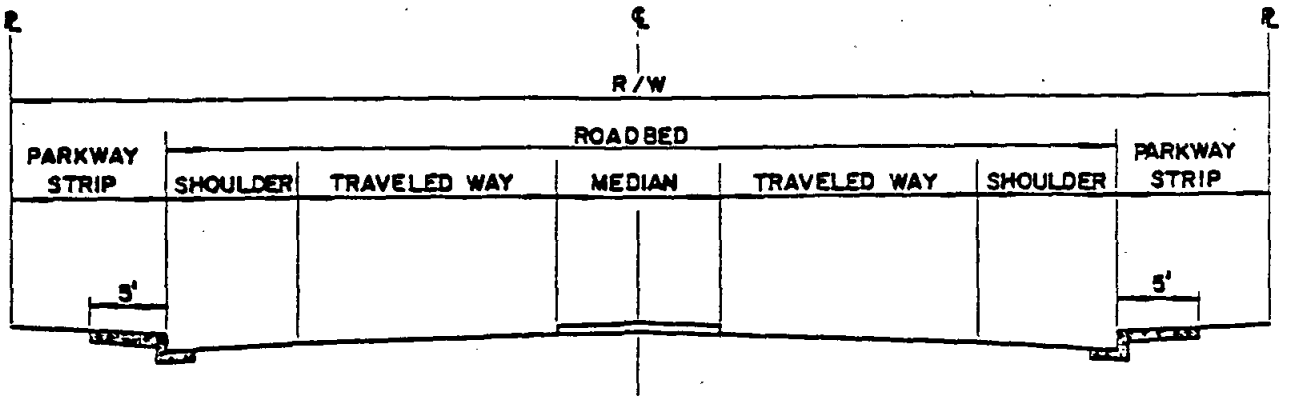

TYPE OF ROAD OR STREET	R/W	ROADBED	TRAVELED WAY	SHOULDER	MEDIAN	PARKWAY STRIP
PRIME ARTERIAL TRAFFIC VOLUME OF 16,000 V.P.D. OR MORE	126'	106'	36'	8'	18'	10'
MAJOR ROAD TRAFFIC VOLUME 10,000 TO 16,000 V.P.D.	102'	82'	24'	8'	18'	10'
COLLECTOR ROAD TRAFFIC VOLUME 5,000 TO 10,000 V.P.D.	84'	64'	24'	8'	0'	10'
RESIDENTIAL COLLECTOR STREET TRAFFIC VOLUME FROM 150 TO 700 DWELLING UNITS	60'	40'	12'	8'	0'	10'
RESIDENTIAL STREET TRAFFIC VOLUME FROM 150 DWELLING UNITS OR LESS	56'	36'	12'	6'	0'	10'
RESIDENTIAL CUL-DE-SAC STREET TRAFFIC VOLUME FROM 20 UNITS OR LESS. 600' MAX. LENGTH	52'	32'	12'	4'	0'	10'
RESIDENTIAL LOOP STREET TRAFFIC VOLUME FROM 20 UNITS OR LESS. 600' MAX. LENGTH	52'	32'	12'	4'	0'	10'
*COMM. & IND. COLLECTOR STREET TRAFFIC VOLUME FROM COMMERCIAL OR INDUSTRIAL ST'S.	88'	68'	24'	10'	0'	10'
*COMM. & IND. STREET TRAFFIC VOLUME FROM ABUTTING COMMERCIAL LOTS	72'	52'	16'	10'	0'	10'
*COMM. & IND. CUL-DE-SAC STREET TRAFFIC VOLUME FROM ABUTTING COMMERCIAL LOTS	72'	52'	16'	10'	0'	10'
FRONTAGE ROAD ADJACENT TO FREEWAY RIGHT OF WAY		SEE	NOTE	No. 4		

*COMM. & IND. = COMMERCIAL & INDUSTRIAL

NOTE: 1. STREET CLASSIFICATIONS (EXCEPT PRIME ARTERIAL) AND TYPICAL ROADWAY SECTIONS FROM SAN DIEGO COUNTY TECHNICAL ROAD POLICY (JAN. 6, 1964).

2. PRIME ARTERIAL SECTION BASED UPON MINIMUM STANDARDS "NATIONAL COMMITTEE ON URBAN TRANSPORTATION".

3. SEE SAN DIEGO COUNTY STANDARD DRAWINGS AND SAN DIEGO COUNTY TECHNICAL ROAD POLICY FOR SIDEWALK, CURB, AND ROADWAY REQUIREMENTS.

4. FRONTAGE ROAD ADJACENT TO FREEWAY R/W. TRAVELED WAY AND MEDIAN STANDARD FOR ROAD CLASSIFICATION AND/OR TRAFFIC VOLUME. SHOULDER ADJACENT TO FREEWAY 2'. PARKWAY STRIP ADJACENT TO FREEWAY VARIES FROM 4' TO 10' SHOULDER AND PARKWAY STRIP AWAY FROM FREEWAY STANDARD FOR TRAFFIC VOLUME AND/OR ROAD CLASSIFICATION.

DRAWN BY ____ CHECKED BY ____	SAN DIEGO COUNTY DESIGN STANDARD	TITLE BLK
RECOMMENDED BY DPW		REVISION / BY / APPROVED / DATE
APPROVED BY COUNTY ENGINEER	TYPICAL ROADWAY SECTIONS	FORMERLY STANDARD DRAWING 310-3
R.C.E. 10338		NUMBER DS-1
DATE 1-12-73		

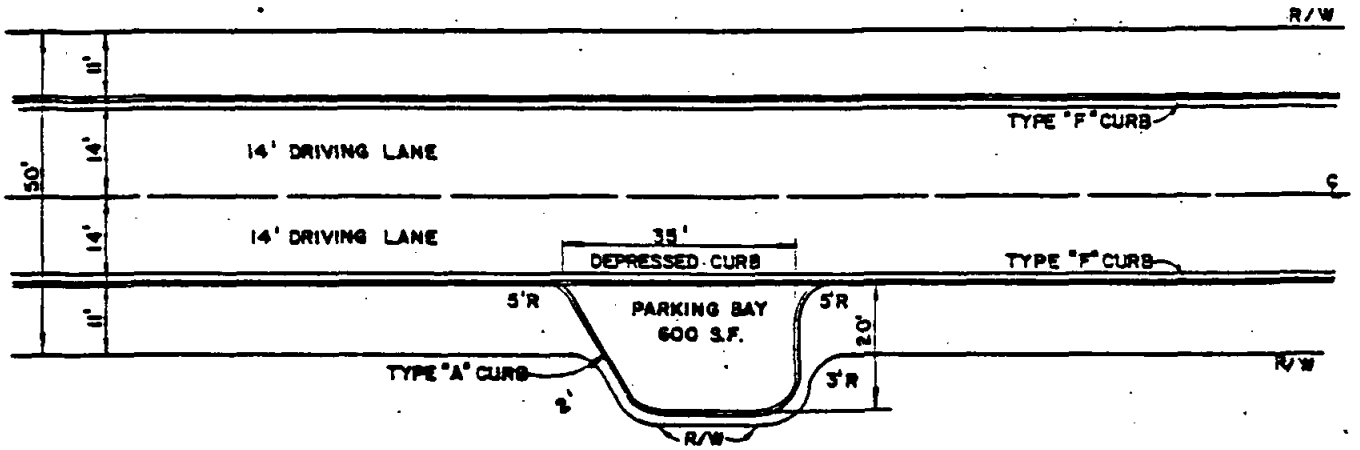

PLAN

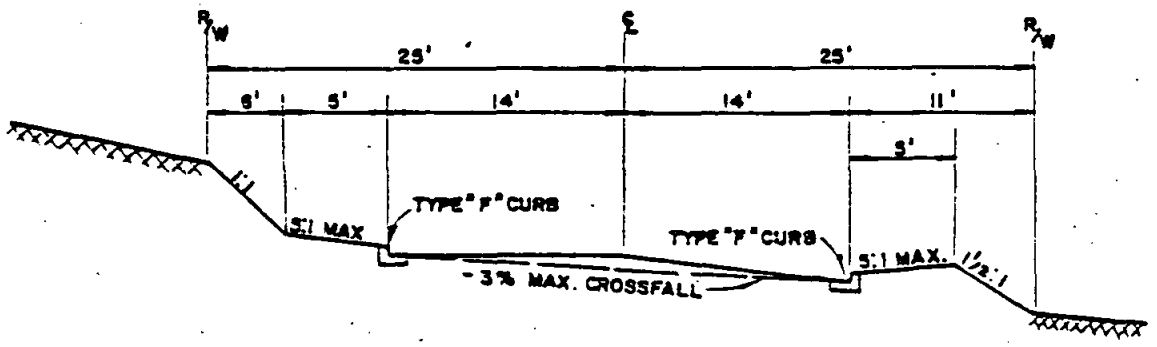

TYPICAL ROADWAY SECTION

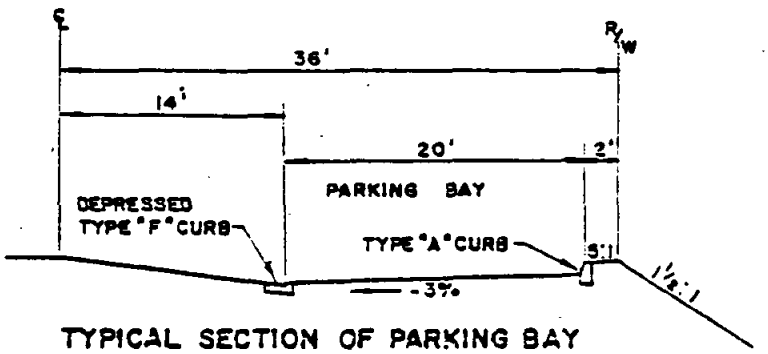

TYPICAL SECTION OF PARKING BAY

NOTES:

1. SEE SAN DIEGO COUNTY STANDARD DRAWINGS AND SAN DIEGO COUNTY TECHNICAL ROAD POLICY FOR CURB, SIDEWALK & ROADWAY REQUIREMENTS.
2. NATURAL SLOPE EXCEEDS 20% AS DEFINED IN SAN DIEGO COUNTY TECHNICAL ROAD POLICY SECT 4.22
3. REQUIRED: ONE 600 SQUARE FOOT PERPENDICULAR PARKING BAY PER LOT. THE SURVEYOR-ROAD COMMISSIONER MAY ALSO ESTABLISH ALTERNATE STANDARD TYPICAL SECTIONS WHICH WILL PROVIDE A MINIMUM OF TWO PARKING STALLS PER LOT.
4. USE OF THIS STREET SECTION LIMITED TO AREAS IN WHICH AT LEAST 80% OF THE LOTS HAVE A NET AREA NOT LESS THAN 20,000 SQUARE FEET.

DRAWN BY ____ CHECKED BY ____	SAN DIEGO COUNTY DESIGN STANDARD	
RECOMMENDED BY [illegible]		REVISION | BY | APPROVED | DATE
APPROVED BY COUNTY ENGINEER	HILLSIDE RESIDENTIAL STREET	FORMERLY STANDARD DRAWING 311-1
[illegible] R.C.E. 10358	ALTERNATE No. 1	NUMBER DS-2
DATE 2/27/76		

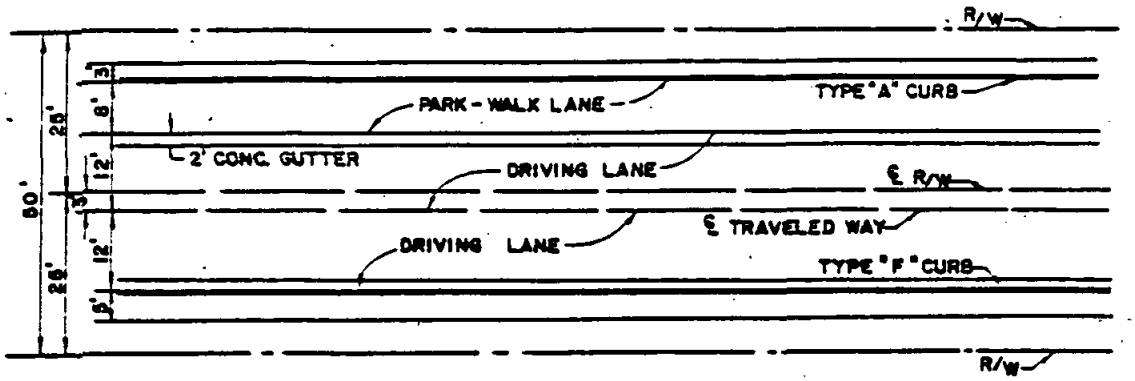

PLAN

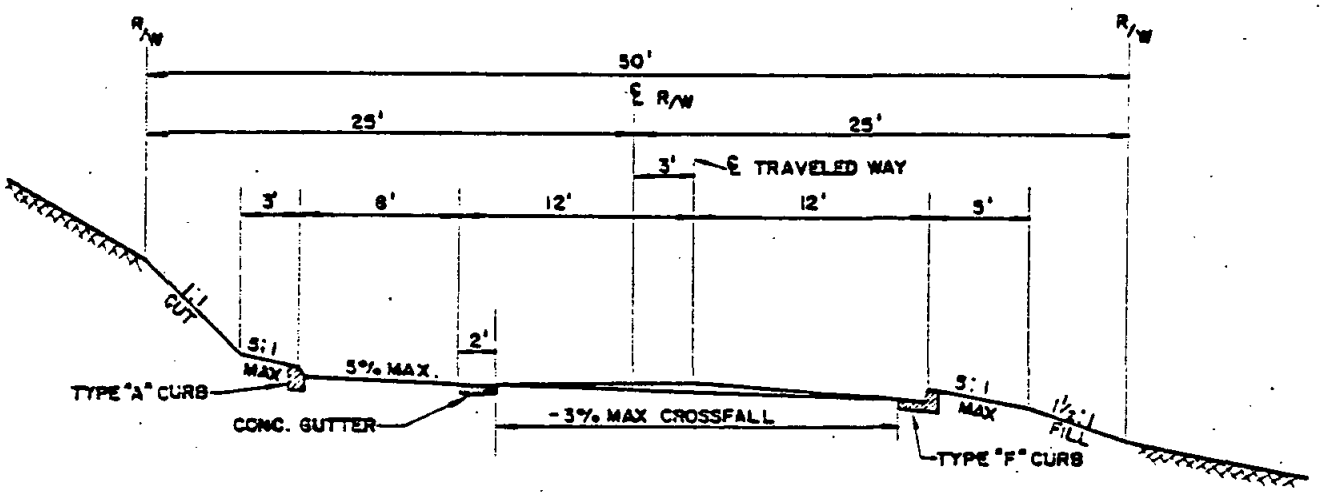

TYPICAL ROADWAY SECTION

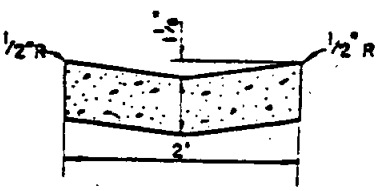

CONCRETE GUTTER DETAIL

NOTES:

1. SEE SAN DIEGO COUNTY STANDARD DRAWINGS AND SAN DIEGO COUNTY TECHNICAL ROAD POLICY FOR CURB, SIDEWALK & ROADWAY REQUIREMENTS.
2. NATURAL SLOPE EXCEEDS 20% AS DEFINED IN SAN DIEGO COUNTY TECHNICAL ROAD POLICY SECT. 4.22
3. USE OF THIS STREET SECTION LIMITED TO AREAS IN WHICH AT LEAST 80% OF THE LOTS HAVE A NET AREA OF NOT LESS THAN 20,000 SQUARE FEET.
4. USE OF HILLSIDE RESIDENTIAL STREET STANDARDS ARE APPLICABLE ONLY TO STREETS CLASSIFIED AS, RESIDENTIAL, RESIDENTIAL CUL-DE-SAC, OR RESIDENTIAL LOOP STREETS AND ARE NOT APPLICABLE TO STREETS IN AREAS ZONED FOR COMMERCIAL, INDUSTRIAL OR MULTIPLE RESIDENTIAL USE.

DRAWN BY ____ CHECKED BY ____	SAN DIEGO COUNTY DESIGN STANDARD	
RECOMMENDED BY [illegible]		REVISION | BY | APPROVED | DATE
APPROVED BY COUNTY ENGINEER	HILLSIDE RESIDENTIAL STREET	FORMERLY STANDARD DRAWING 312-1
[illegible] R.C.E. 10359	ALTERNATE No. 2	NUMBER DS-3
DATE [illegible]		

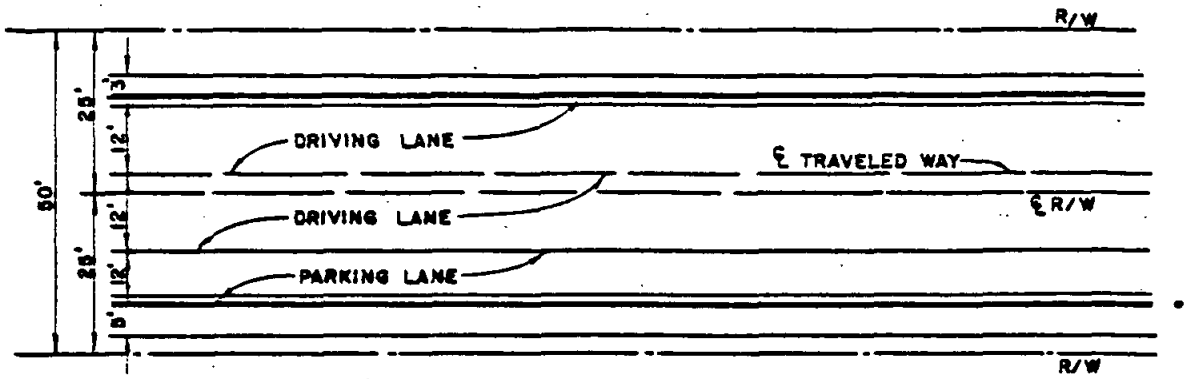

PLAN

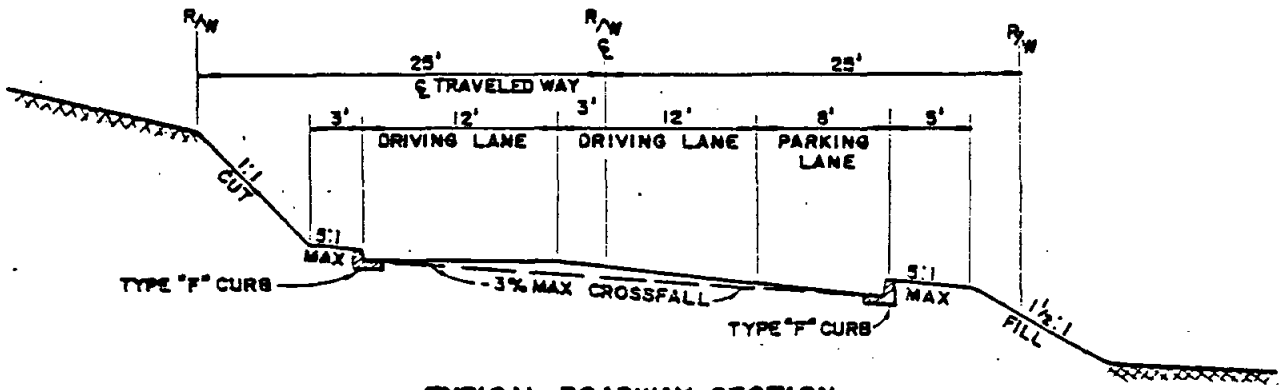

TYPICAL ROADWAY SECTION

NOTES:

1. SEE SAN DIEGO COUNTY STANDARD DRAWINGS AND SAN DIEGO COUNTY TECHNICAL ROAD POLICY FOR CURB, SIDEWALK & ROAD REQUIREMENTS.
2. NATURAL SLOPE EXCEEDS 20% AS DEFINED IN SAN DIEGO COUNTY TECHNICAL ROAD POLICY SECT. 4.22.
3. USE OF THIS STREET SECTION LIMITED TO AREAS IN WHICH AT LEAST 80% OF THE LOTS HAVE A NET AREA OF NOT LESS THAN 20,000 SQUARE FEET.
4. USE OF HILLSIDE RESIDENTIAL STREET STANDARDS ARE APPLICABLE ONLY TO STREETS CLASSIFIED AS RESIDENTIAL, RESIDENTIAL CUL-DE-SAC, OR RESIDENTIAL LOOP STREETS AND ARE NOT APPLICABLE TO STREETS IN AREAS ZONED FOR COMMERCIAL, INDUSTRIAL OR MULTIPLE RESIDENTIAL USE.

DRAWN BY ____ CHECKED BY ____	SAN DIEGO COUNTY DESIGN STANDARD	
RECOMMENDED BY [illegible]		REVISION | BY | APPROVED | DATE
APPROVED BY COUNTY ENGINEER	HILLSIDE RESIDENTIAL STREET	FORMERLY STANDARD DRAWING 313-1
[illegible] R.C.E. 10358	ALTERNATE No. 3	NUMBER DS-4
DATE 12/2/76		

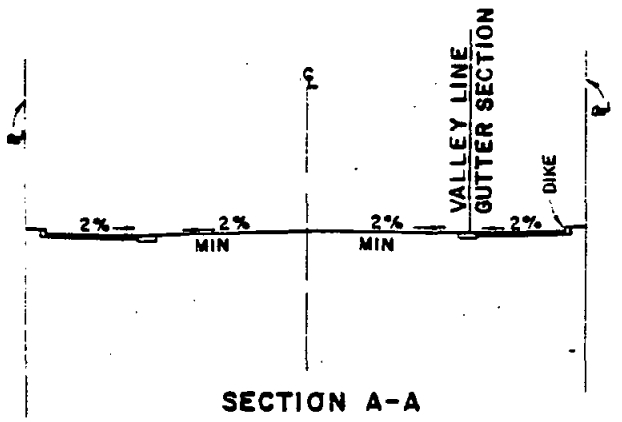

SECTION A-A

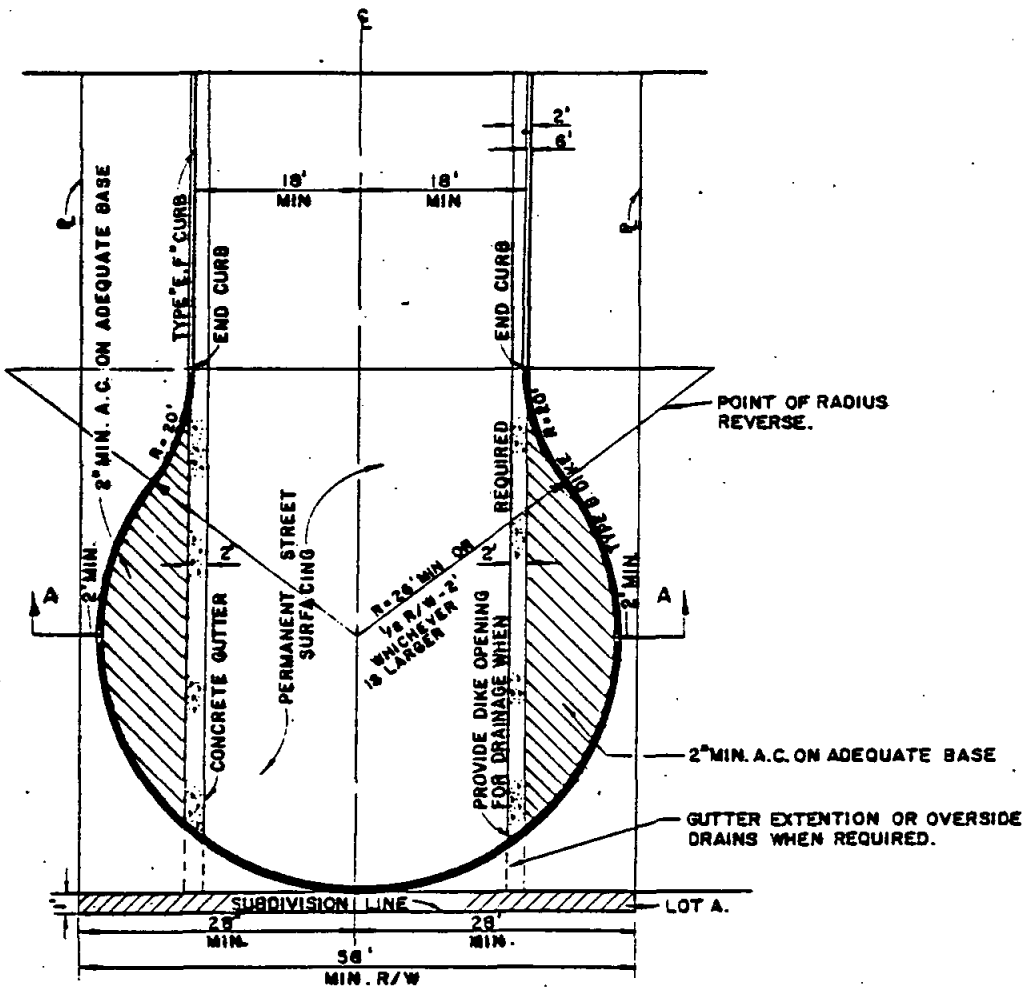

NOTE:

1. FOR USE ON EITHER 36' OR 40' WIDTH STREETS.

DRAWN BY ____ CHECKED BY ____	SAN DIEGO COUNTY DESIGN STANDARD	TITLE BLOCK	KC	G. Kirchhoff	2/24/76
RECOMMENDED BY [illegible]					
APPROVED BY COUNTY ENGINEER	TEMPORARY TURN-AROUND AT DEAD-END STREET	REVISION	BY	APPROVED	DATE
[illegible] R.C.E. 10358		FORMERLY STANDARD DRAWING 3:6-1			
DATE 2/24/76		NUMBER DS-5			

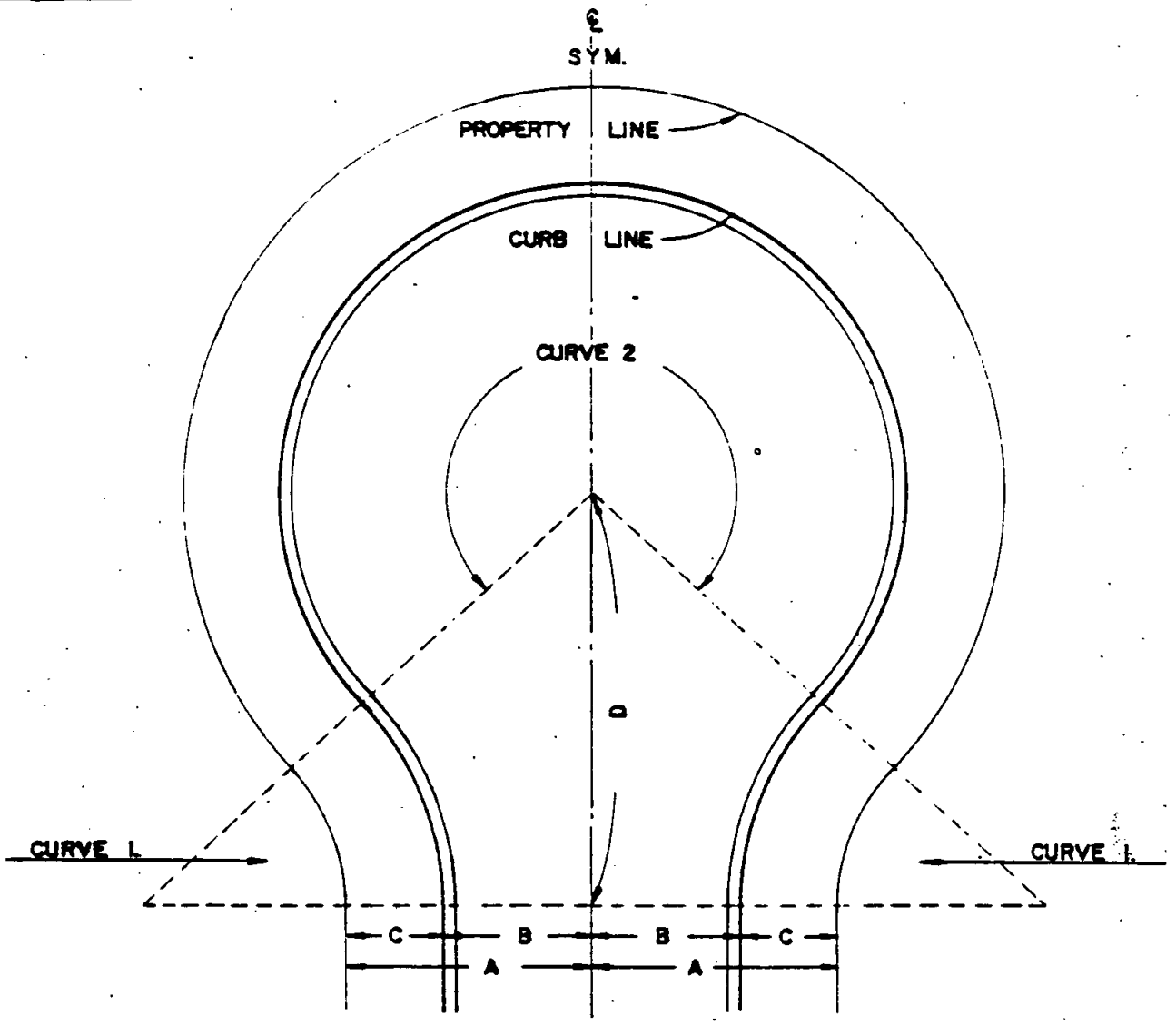

DIMENSIONS					CURVE 1.							CURVE 2				
R_{X_W}	A	B	C	D	△	CURB			PROP.			△	CURB		PROP.	
						R	L	T	R	L	T		R	L	R	L
52'	26'	16'	10'	50.95'	46°42' 30"	32'	26.09'	13.82'	22'	17.93'	9.50'	273°25' 00"	38'	181.34'	48'	229.06'
56'	28'	18'	10'	50.99'	42°50' 00"	37'	27.66'	14.52'	27'	20.18'	10.59'	265°40' 00"	38'	176.20'	48'	222.56'
60'	30'	20'	10'	68.15'	29°35' 31"	100'	51.65'	26.41'	90'	46.48'	23.77'	239° 11' 02"	38'	158.63'	48'	200.38'
72'	36'	26'	10'	81.39'	32°51' 36"	100'	57.35'	29.49'	90'	51.62'	26.54'	245°43' 12"	50'	214.43'	60'	257.32'

DRAWN BY ____ CHECKED BY ____	SAN DIEGO COUNTY DESIGN STANDARD		
RECOMMENDED BY [signature]		REVISION	BY	APPROVED	DATE
APPROVED BY COUNTY ENGINEER	TURNAROUND AND CALCULATIONS	FORMERLY STANDARD DRAWING 304-3	
[signature] R.C.E. 10358		NUMBER DS-6	
DATE 2/22/76			

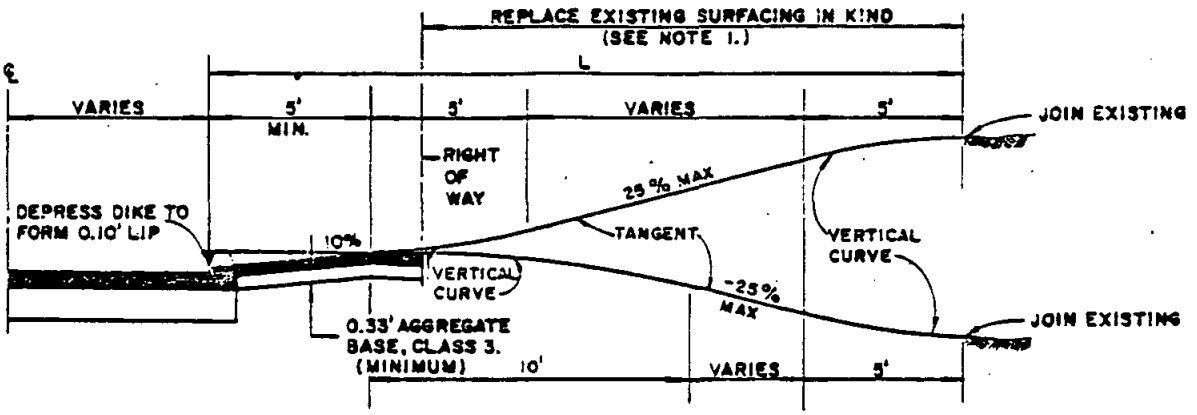

PROFILE

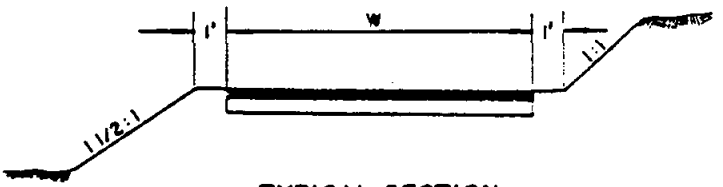

TYPICAL SECTION

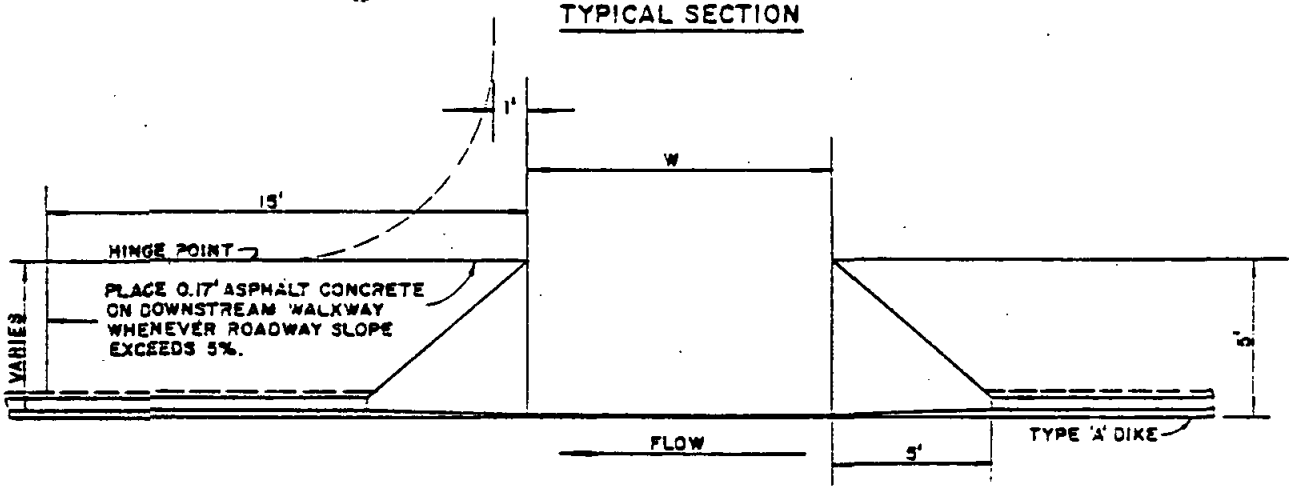

PLAN

NOTES:

1. DRIVEWAYS WITH GRADES GREATER THAN 15% SHALL BE SURFACED WITH ASPHALT CONCRETE OR PORTLAND CEMENT CONCRETE.
2. MAXIMUM GRADE BREAK 14%.
3. SEE STANDARD DRAWING G-14 FOR CONCRETE DRIVEWAYS.
4. SEE STANDARD DRAWING G-15 & G-16 FOR LOCATION & WIDTH REQUIREMENTS.

DRIVEWAY PAVING SCHEDULE

DEPTH OF A.C.	GRADE
0.17'	0-15%
0.25'	15-20%
0.33'	20-25%

DRAWN BY ____ CHECKED BY ____	SAN DIEGO COUNTY DESIGN STANDARD	TITLE
RECOMMENDED BY		REVISION / BY / APPROVED / DATE
APPROVED BY COUNTY ENGINEER	ASPHALT CONCRETE DRIVEWAY	FORMERLY STANDARD DRAWING 237
R.C.E. 10358		NUMBER DS-7
DATE		

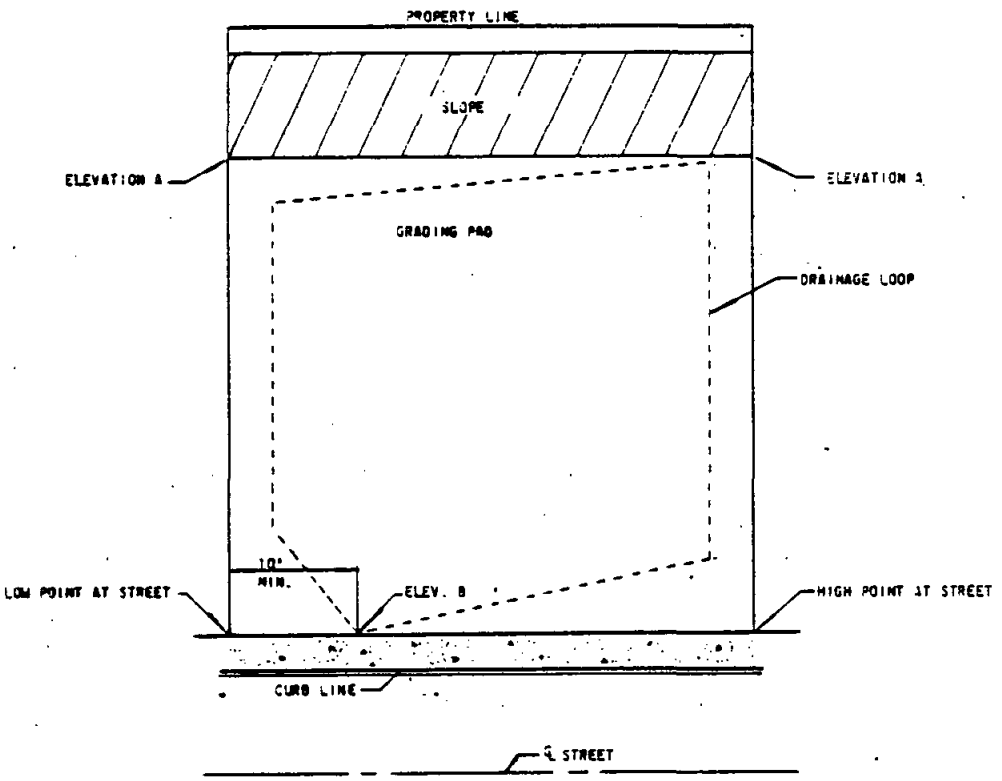

TYPICAL FINISHED GRADING

NOTES:

1. ELEV. A IS TO BE DETERMINED FOR THE MOST REMOTE CORNER OF THE LOT FROM THE DRAIN POINT. ELEV. A = ELEV. B PLUS 1% TIMES ONE-HALF THE PERIMETER OF THE LOT.
2. MIN. 1% SWALE TO STREET OR OTHER DISCHARGE POINT.
3. ALL SLOPE SURFACES TO BE PROTECTED BY APPROVED EROSION CONTROL.

DRAWN BY ____	CHECKED BY ____	SAN DIEGO COUNTY DESIGN STANDARD			
RECOMMENDED BY			REVISION	BY	APPROVED	DATE
APPROVED BY COUNTY ENGINEER		LOT GRADING	FORMERLY STANDARD DRAWING 231T			
R.C.E. 10358			NUMBER DS-8			
DATE						

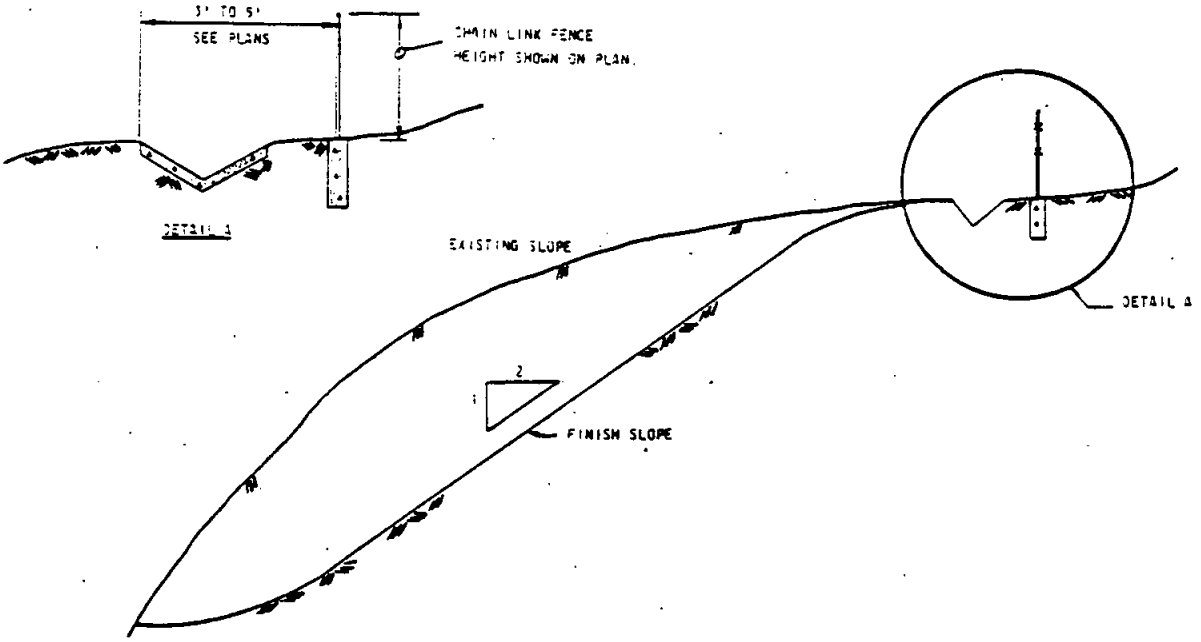

FENCING CUT BANKS

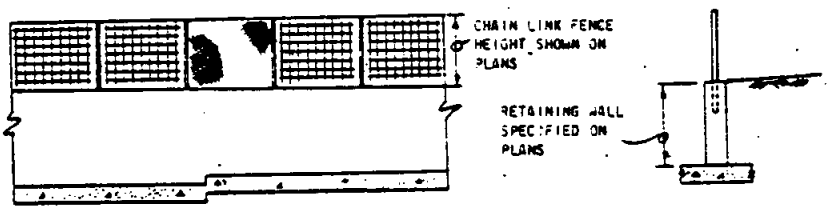

RETAINING WALL & CHAIN LINK FENCE
FOR WALL HEIGHTS GREATER THAN 4 FT.

NOTES:

1. CHAIN LINK FENCE OR ALTERNATE ACCEPTABLE TO THE COUNTY ENGINEER SHALL BE INSTALLED ALONG THE TOP OF SLOPES EXCEEDING 15 FEET VERTICAL HEIGHT AND 3 TO 1 SLOPE RATIO, AND ALONG THE TOP OF WALLS EXCEEDING 4' VERTICAL HEIGHT.
2. RETAINING WALLS AND CHAIN LINK FENCE OR ALTERNATE SHALL BE CONSTRUCTED IN ACCORDANCE WITH COUNTY OF SAN DIEGO STANDARD SPECIFICATIONS.

DRAWN BY ____ CHECKED BY ____	SAN DIEGO COUNTY DESIGN STANDARD	TITLE	RC		1/24/76
RECOMMENDED BY					
APPROVED BY COUNTY ENGINEER		REVISION	BY	APPROVED	DATE
R.C.E. 10358	FENCING CUT BANKS	FORMERLY STANDARD DRAWING 2327			
DATE		NUMBER DS-9			

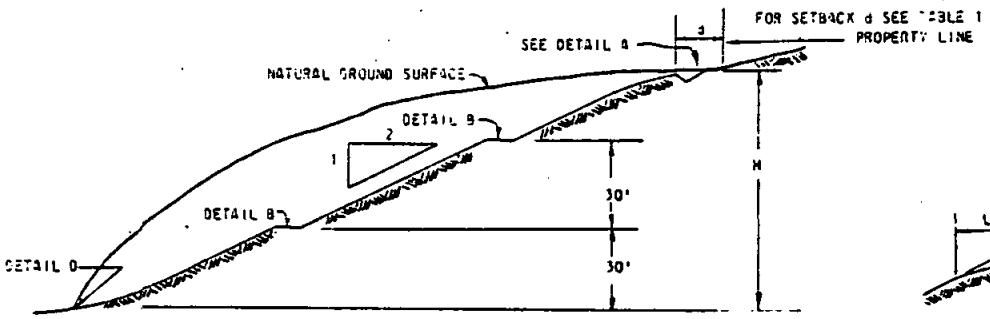

TYPICAL CUT SLOPE

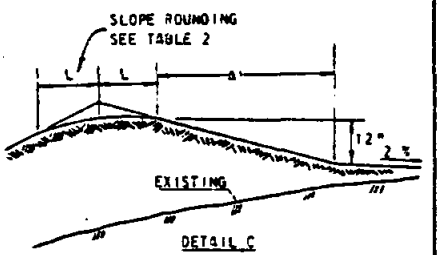

DETAIL C

TYPICAL BERM AT TOP OF ALL FILL SLOPES

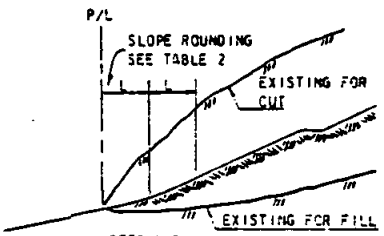

DETAIL D

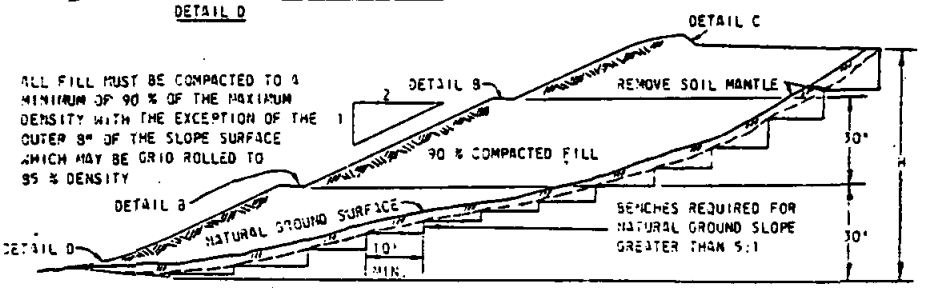

TYPICAL FILL SLOPE

TABLE 1
REQUIRED SETBACK

H FEET	d
0 - 15'	3'
OVER 15'	5'

TABLE 2
SLOPE ROUNDING

H FEET	L FEET
0' - 5'	-
5' - 20'	2.5'
20' - 40'	5'
OVER 40'	10'

DRAWN BY ____	CHECKED BY ____	SAN DIEGO COUNTY DESIGN STANDARD	TITLE BLOCK [illegible] 4/24/76
RECOMMENDED BY [illegible]			REVISION / BY / APPROVED / DATE
APPROVED BY COUNTY ENGINEER		GRADING OF SLOPES	FORMERLY STANDARD DRAWING 208-1T
[illegible] R.C.E. 10358			NUMBER DS - 10
DATE 2/24/76			

PROPERTY LINE SETBACKS

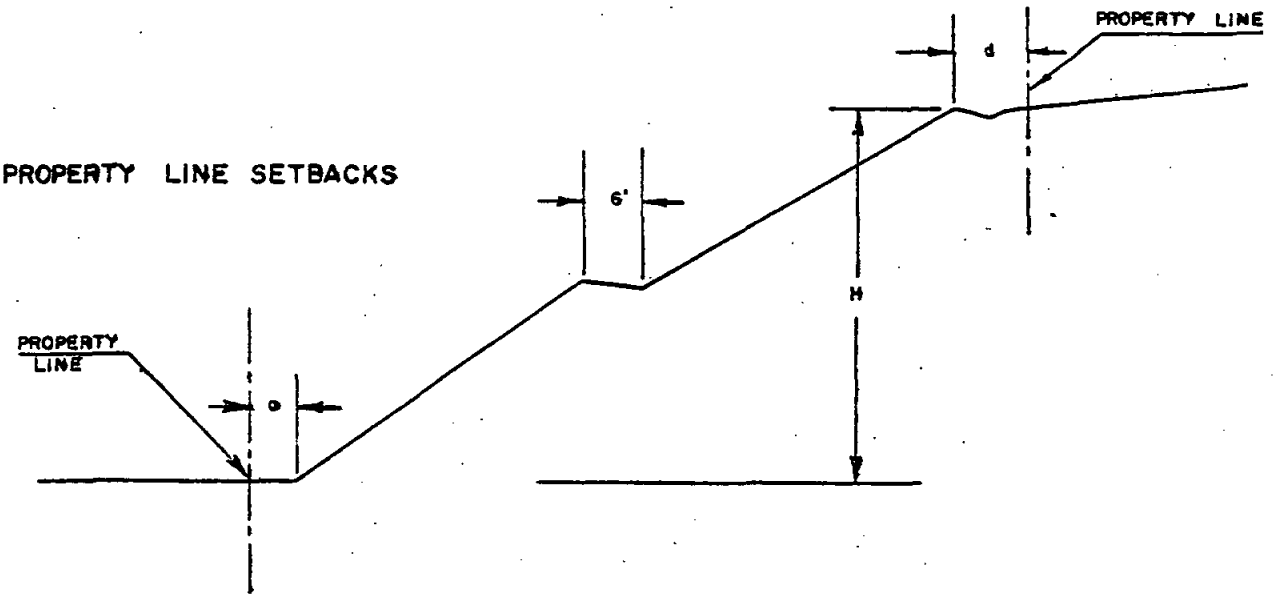

BUILDING SETBACKS

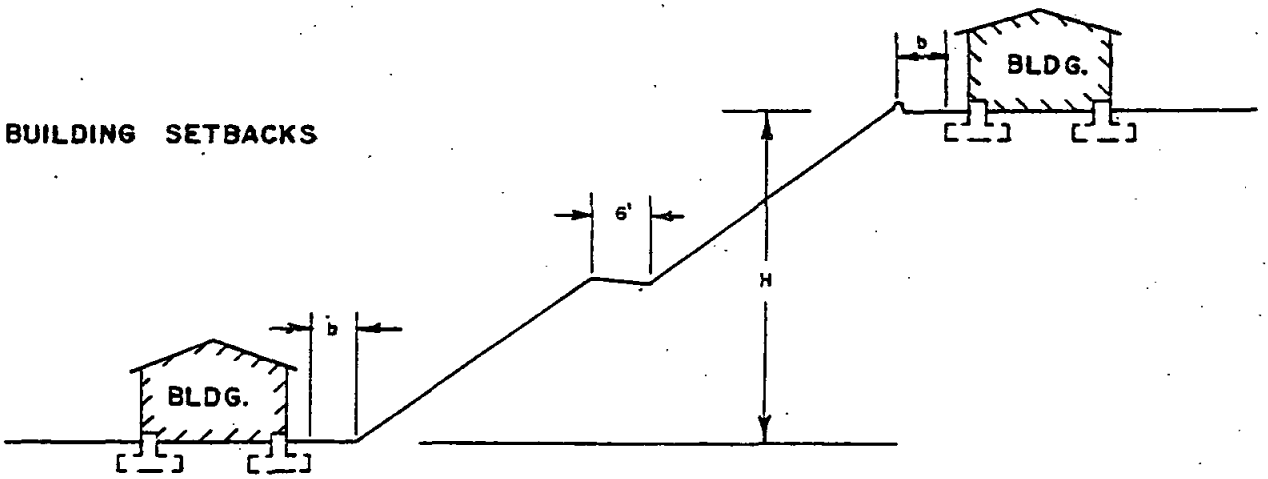

REQUIRED SETBACKS			
H FEET	a	b	d
0 - 15	1' - 6"	5'	3'
15 - 30	3'	5'	5'
OVER 30	5'	5'	5'

a. DISTANCE FROM TOE OF SLOPE TO PROPERTY LINE

b. DISTANCE FROM EDGE OF FOUNDATION TO TOE OR TOP OF SLOPE.

d. DISTANCE FROM TOP OF SLOPE TO PROPERTY LINE.

H. TOTAL SLOPE HEIGHT MEASURED VERTICALLY.

DRAWN BY ____ CHECKED BY ____	SAN DIEGO COUNTY DESIGN STANDARD	TITLE	
RECOMMENDED BY		REVISION / BY / APPROVED / DATE	
APPROVED BY COUNTY ENGINEER R.C.E. 10358	REQUIRED SETBACKS	FORMERLY STANDARD DRAWING 209	
DATE 7/22/76		NUMBER DS-11	

PROPOSED CONSTRUCTION

LINES

#- INDICATES CENTER LINE ESTABLISHED IN ACCORDANCE WITH S.D. COUNTY CODE, DIV. 3 OF TITLE 7.

- ULTIMATE CENTERLINE (℄)#
- STAGE CONSTRUCTION LINE
- INTERSECTING ROADS & STREETS
- RIGHT OF WAY LINE
- EQUATION OR RADIUS LINE
- OFFSET TIE
- GRADE LINES ON PROFILES
- GROUND LINES ON PROFILES
- SLOPE LIMIT LINES

POINTS

- BC & EC
- PI OR ANGLE PT.
- ℄ MONUMENT
- BENCH MARK

CONSTRUCTION

- PAVEMENT EDGE & SHOULDERS
- A C DIKE (LABEL TYPE)
- CURB & GUTTER (LABEL TYPE)
- CULVERT
- DOWNDRAIN, A C SPILLWAY
- DROP INLET
- BOX CULVERT
- HEADWALL, STANDARD
- HEADWALL "L" TYPE
- HEADWALL & WINGWALL
- GUARD RAIL
- DRIVEWAY APRONS A C
- UTILITY DUCT (LABEL)
- DRIVEWAY APRONS P C C
- CONCRETE CROSS GUTTER
- SIDEWALK
- RETAINING WALL
- FENCE (LABEL TYPE)
- DITCH, LINED
- DITCH, UNLINED
- BRIDGE

UTILITIES

- GAS LINE
- WATER LINE
- ELECTRIC CABLE
- TELEPHONE CABLE
- SEWER LINE
- UTILITY MANHOLE

UNDERGROUND ONLY

STRUCTURAL SYMBOLS

- PORTLAND CEMENT CONCRETE
- ASPHALT CONCRETE (EXISTING)
- ROAD OIL MIX OR ASPHALT CONCRETE SURFACING
- BASE MATERIAL
- ORIGINAL GROUND

MISCELLANEOUS SYMBOLS

- CONTRACTED LINE (NOT TO SCALE)
- LIMIT ARROWS
- PROJECT, WORK LIMIT
- CUTTING PLANE

CADASTRAL SYMBOLS

LAND LINES

- TOWNSHIP LINES
- SECTION LINES
- GRANT LINE (RHO BOUNDARY OR INDIAN RESERVATION)
- SUBDIVISION BOUNDARY LINE
- CITY / COUNTY BOUNDARY LINE
- PROPERTY LINE
- LOT LINE
- EASEMENT LINE

SECTION CORNER: 2 | 1 / 11 | 12

SECTION CENTER: SEC / 10

1/4 SECTION N-S: 5 / 8

1/4 SECTION E-W: 6 | 5

BASIS OF BEARING CALIFORNIA COORDINATE SYSTEM ZONE VI

DRAWN BY	CHECKED BY	SAN DIEGO COUNTY DESIGN STANDARD	TITLE
RECOMMENDED BY			REVISION / BY / APPROVED / DATE
APPROVED BY COUNTY ENGINEER		CONSTRUCTION PLAN SYMBOLS	FORMERLY STANDARD DRAWING
R.C.E. 10358			NUMBER DS-12
DATE			

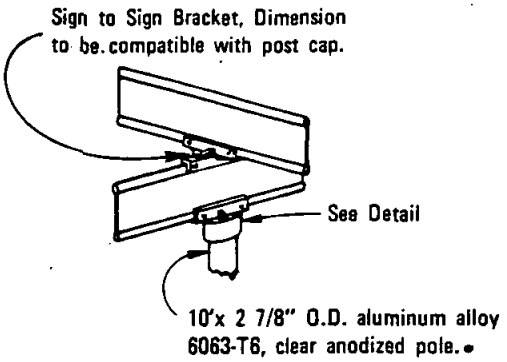

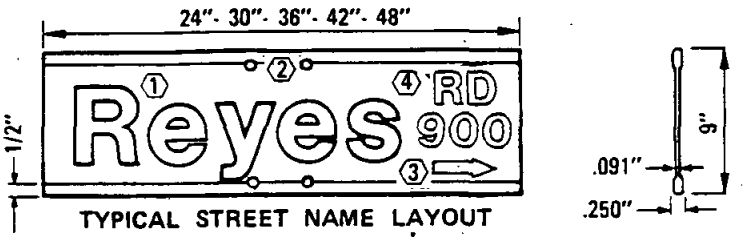

TYPICAL STREET NAME LAYOUT

Typical layout of legend and border on variable length sign blade of extruded aluminum with reverse screened reflective sheeting engineering grade. White letters and border on green background.

① 5"–U.C., 3 3/4"–L.C.

② 4 11/16" spacing of two 11/32" holes centered on both top and bottom edge of blade to match holes in sign bracket assemblies.

③ 2" x 2 3/4"–Arrow

④ 2"–U.C.

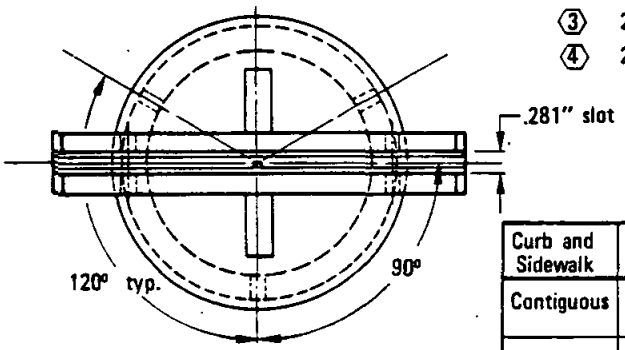

POST CAP DETAIL

Curb and Sidewalk	Sidewalk Width	Setback
Contiguous	6' or less	Sidewalk Width
Contiguous	more than 6'	2'-0"
Separate	———	2'-0"

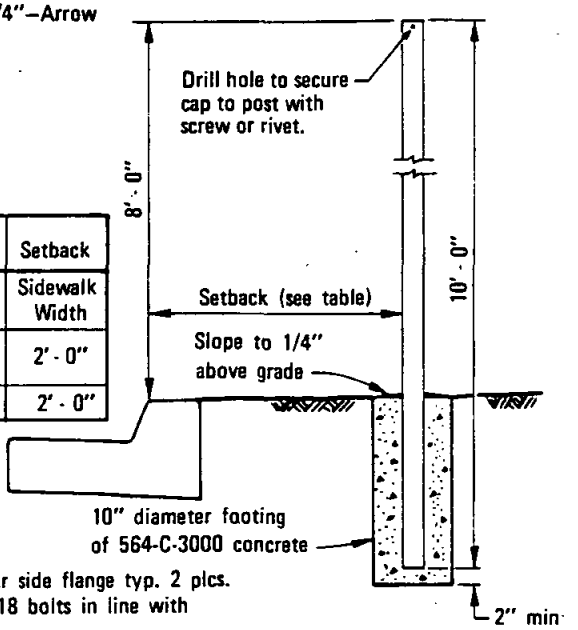

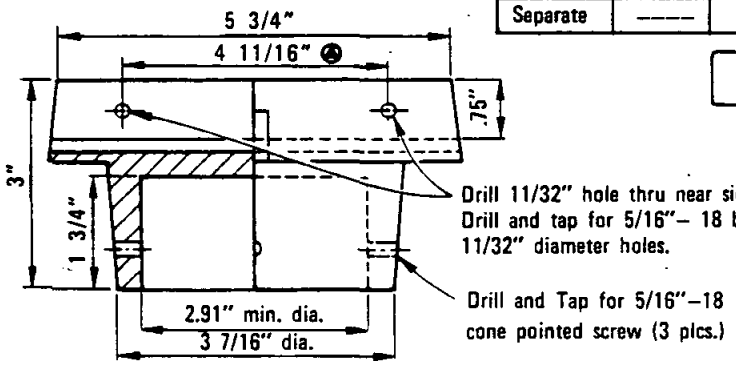

HALF–SECTION DETAIL

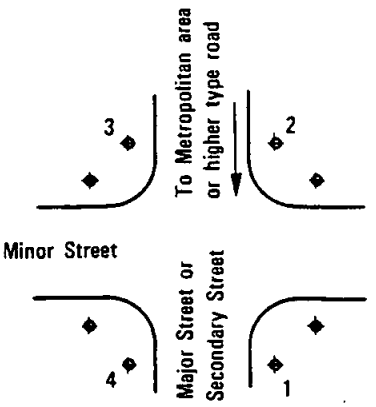

STREET NAME SIGN LOCATION
(numbers indicate priority of location selection)

NOTES

1. ④ denotes 4 11/16" spacing shall match the holes in the extruded blades.
2. Bracket to be die cast aluminum.
3. All attaching screws shall be vandal proof type.

DRAWN BY	CHECKED BY	SAN DIEGO COUNTY DESIGN STANDARD	
RECOMMENDED BY			
APPROVED BY COUNTY ENGINEER		STANDARD STREET SIGN	
R.C.E. 10358			
DATE 10/6/76			

DRAF DIM.	C.S.	D.S.	12/4/76
REVISION	BY	APPROVED	DATE
FORMERLY STANDARD DRAWING 301-2			
NUMBER	DS–13		

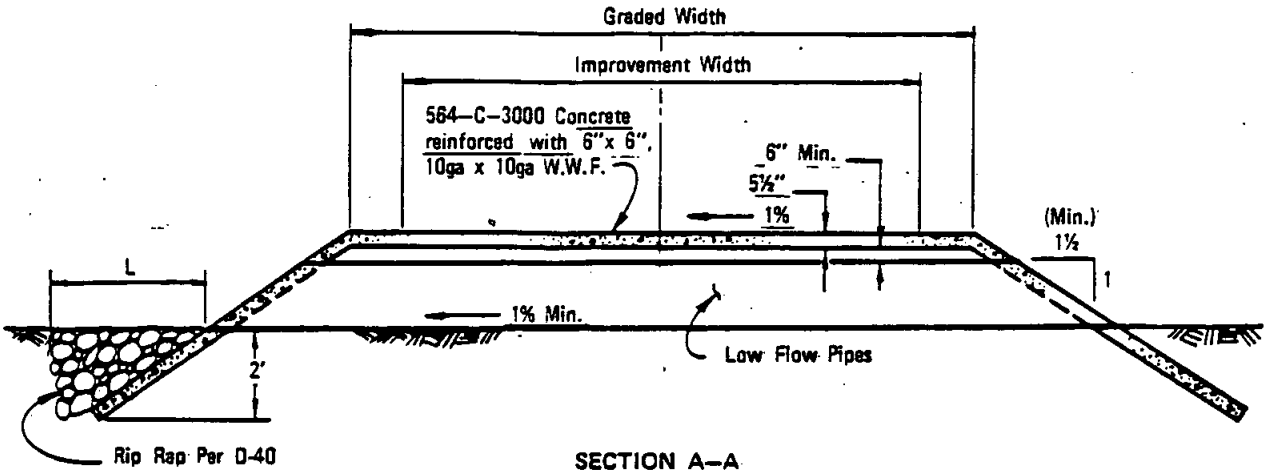

SECTION A–A

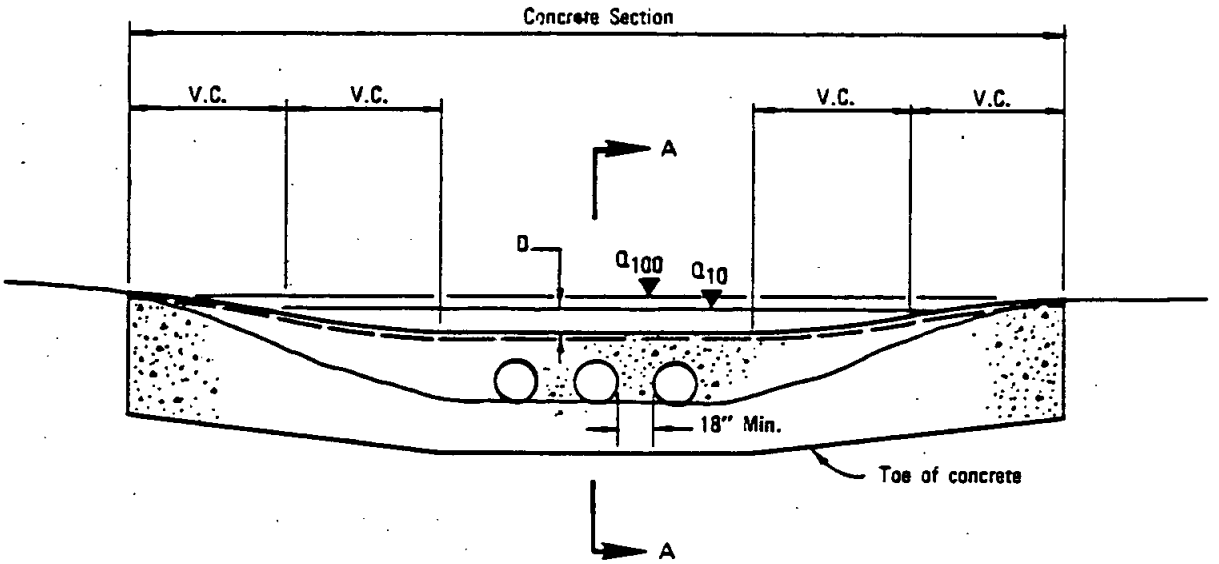

DIP SECTION PROFILE

NOTES:

1. Dip sections shall conform to Section 5.7–10(d) of the San Diego County Standards.
2. The maximum water depth, based on a 10 year frequency storm, shall be 10". The depth (D) in feet multiplied by the velocity (V) in feet per second shall be equal to six or less. (DxV=6)
3. Vertical curves shall be designed based on road design speed and the percent change in longitudinal road grade.
4. Low Flow pipes may be omitted if the conditions of Note 2 can be met without their use.

DRAWN BY RG CHECKED BY RC RECOMMENDED BY [illegible]	SAN DIEGO COUNTY DESIGN STANDARD				
APPROVED BY COUNTY ENGINEER R F Walsh R.C.E. 10358 DATE 4-29-82	DIP SECTION (FOR PRIVATE STREETS)	REVISION	BY	APPROVED	DATE
		NUMBER DS-14			

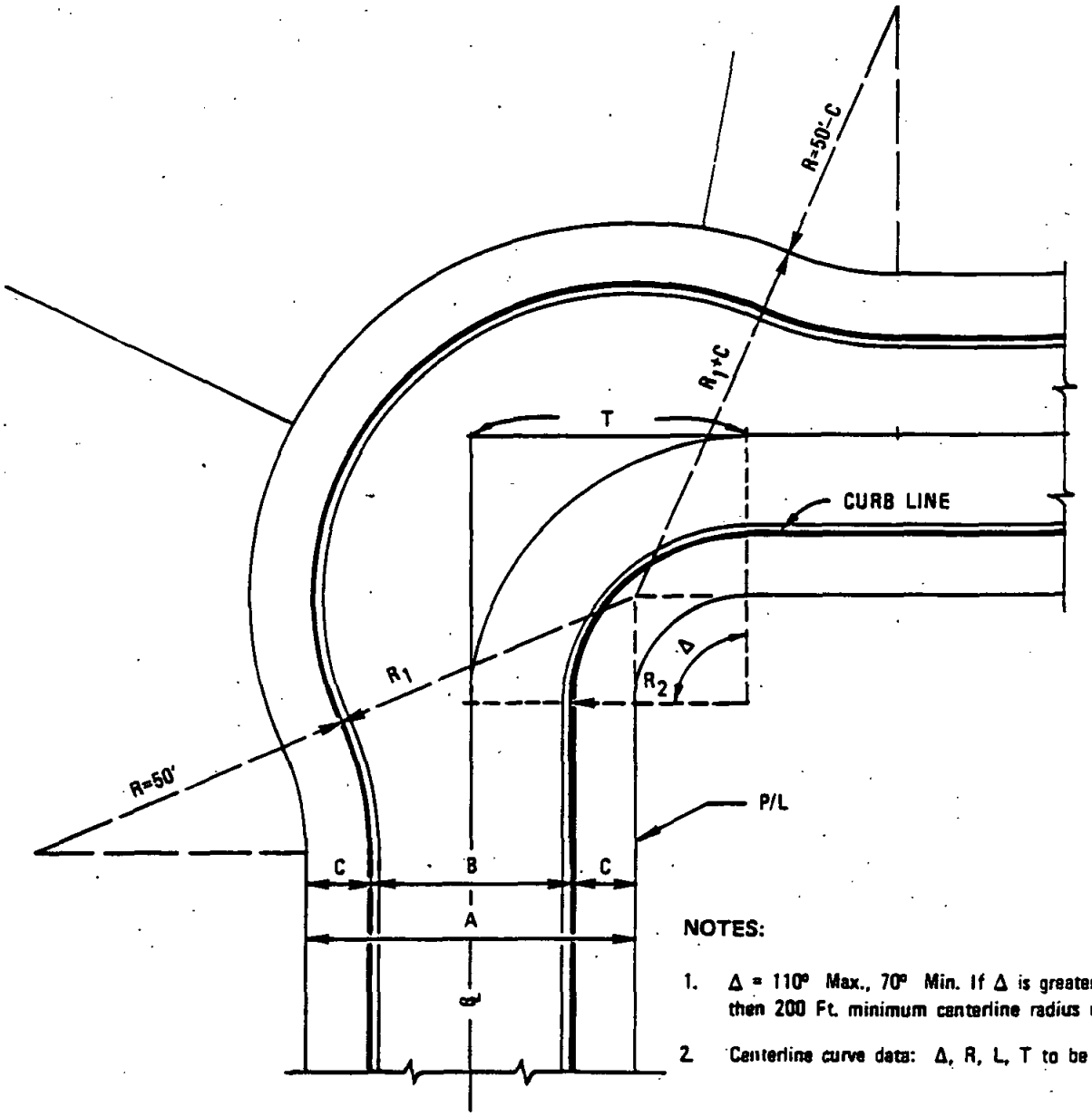

NOTES:

1. Δ = 110° Max., 70° Min. If Δ is greater than 110°, then 200 Ft. minimum centerline radius required.
2. Centerline curve data: Δ, R, L, T to be shown on plans.

PLAN

A	B	R_1*	R_2*	C*
72'	52'	80'	40'	10'
60'	40'	68'	30'	10'
56'	36'	64'	30'	10'
52'	32'	60'	30'	10'
48'	28'	56'	30'	10'

* DIMENSIONS SHOWN ARE MINIMUMS

DRAWN BY RH CHECKED BY MJ	SAN DIEGO COUNTY DESIGN STANDARD	R+C	RC	DM Bellmer	3-1-85
RECOMMENDED BY					
APPROVED BY COUNTY ENGINEER RF Wahl for R.C.E. 10358	STREET KNUCKLE	REVISION	BY	APPROVED	DATE
DATE 11-6-84		NUMBER DS-15			

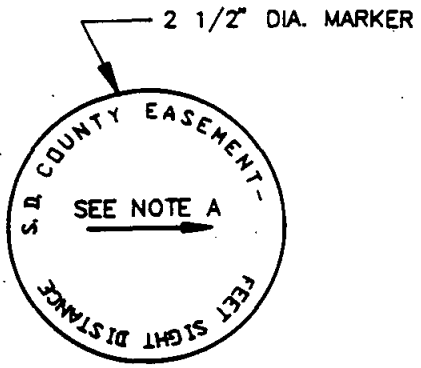

BRONZE MARKER

NOTE A:
Rotate arrow to indicate location of target point

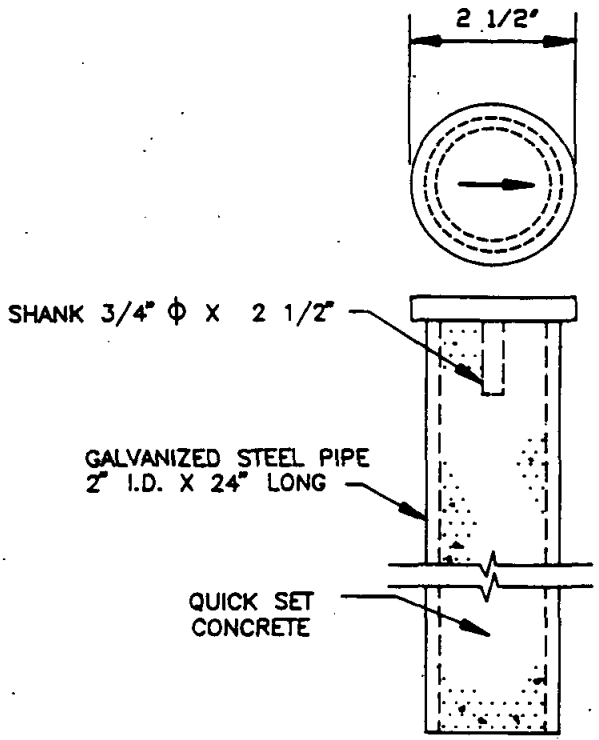

CASE II MARKER

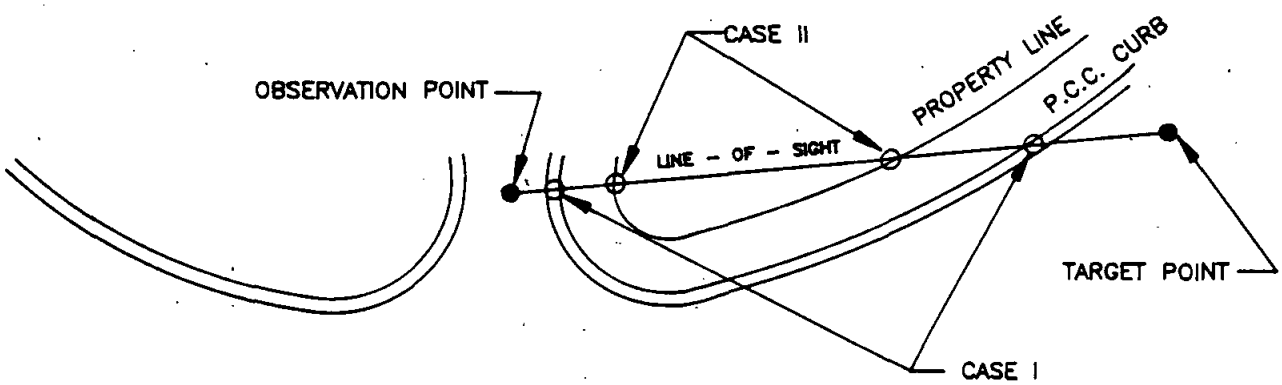

CASE I: BRONZE MARKER TO BE SET IN P.C.C. CURB AT LINE OF SIGHT – CURB INTERSECTION

CASE II: IF NO CURB, SET BRONZE MARKER IN CONCRETE IN 2" X 24" LONG STEEL PIPE AT INTERSECTION OF LINE OF SIGHT AND PROPERTY LINE

CLEAR SPACE EASEMENTS FOR SIGHT DISTANCE, WHERE SPECIFIED IN PLANS, SHALL BE DESIGNATED BY A BRONZE MARKER ACCORDING TO CASE I OR CASE II. ABOVE.

DRAWN BY C.A.D. CHECKED BY O.H.	SAN DIEGO COUNTY DESIGN STANDARD	REVISION	BY	APPROVED	DATE
RECOMMENDED BY CMH		Title	HC	CMHunt	9/89
APPROVED BY: H.K. Jolie for DIRECTOR OF PUBLIC WORKS, R.C.E. 13881	CLEAR SPACE MARKERS				
DATE 6-23-89		NUMBER DS-16			

TABLE OF CONTENTS

CONCRETE STRUCTURES

C-1 Masonry Retaining Wall Type 1 (Level Backfill)

C-2 Masonry Retaining Wall Type 2 (Live Load Surcharge or Sloping Backfill)

C-3 Masonry Retaining Wall Type 3 (Level Backfill)

C-4 Masonry Retaining Wall Type 4 (Live Load Surcharge or Sloping Backfill)

C-5 Masonry Retaining Wall Type 5 (Level Backfill)

C-6 Masonry Retaining Wall Type 6 (Live Load Surcharge or Sloping Backfill)

C-7 General Notes for Masonry Retaining Walls

C-8 Details for Masonry Retaining Wall

C-9 Gravity Retaining Walls

C-10 General Notes and Details for Gravity Retaining Walls

C-11 Reinforced Concrete Retaining Wall Type 1

C-12 Reinforced Concrete Retaining Wall Type 1A

C-13 Reinforced Concrete Retaining Wall Details No. 1

C-14 Reinforced Concrete Retaining Wall Details No. 2

C-15 Reinforced Concrete Retaining Wall Details No. 3

DRAINAGE SYSTEMS

D-1 Curb Inlet - Type A

D-2 Curb Inlet - Type B

D-3 Curb Inlet - Type C

D-4 Curb Inlet - Type D

D-5 Curb Inlet - Type D (Details)

D-7 Catch Basin - Type F

D-8 Catch Basin - Type G

D-9 Storm Drain Cleanout - Type A

D-10 Storm Drain Cleanout - Type B

D-11 Inlets and Cleanouts - Notes and Details

D-12 Curb Inlet Opening

D-13 Welded Steel Grate Frame

D-15 Drainage Structure Grate

D-16 Corrugated Steel Pipe Inlets Types A & B

D-17 Corrugated Steel Pipe Inlets Details

D-18 Slotted Corrugated Steel Pipe Drains 12" through 24"

D-19 Slotted Drain Connections to Standard Inlets

D-20 Concrete Apron for Curb Inlet

D-22 Asphalt Concrete Spillway

D-23 Tapered Inlet and Downdrain Flume

D-24 Entrance Taper and Downdrain Pipe

TABLE OF CONTENTS

D-25 Curb Outlet - Type A

D-27 Sidewalk Underdrain Pipe

D-29 Catch Basin - Type I

D-30 Straight Headwall - Type A (Circular Pipe)

D-31 Straight Headwall - Type A (CSP - Arch)

D-32 Straight Headwall - Type B (Circular Pipe)

D-33 Straight Headwall - Type B (CSP - Arch)

D-34 Wing and U Type Headwalls for 12" to 36" Pipe

D-35 Wing and U Type Headwalls for 42" to 84" Pipe

D-36 L Type Headwalls - Circular Pipe

D-37 L Type Headwalls - CSP Arch

D-38 Curtain Wall

D-39 Inlet Apron for Culverts Up to 42" Diameter

D-40 Rip Rap Energy Dissipator

D-41 Concrete Energy dissipator

D-42 Concrete Energy Dissipator (Reinforcement) 18" to 30" Diameter Pipe

D-43 Concrete Energy Dissipator (Reinforcement) 36" to 72" Diameter Pipe

D-44 Pipe Culvert Headwalls, Endwalls and Warped Wingwalls

D-45 Curb Inlet - Type J Median

D-60 Pipe Bedding and Trench Backfill for Storm Drains

D-61 Rounded Pipe Ends in Drainage Structures

D-62 Pipe Collar

D-63 Concrete Lug

D-70 Minor Drainage Channel

D-71 Major Drainage Channel

D-72 Cutoff Wall for Drainage Channel

D-73 Pipe to Channel Connection

D-74 Graded Earth Channel

D-75 Drainage Ditches

D-76A Single Box Culvert, Details No. 1

D-76B Single Box Culvert, Details No. 2

D-77A Double Box Culvert, Details No. 1

D-77B Double Box Culvert, Details No. 2

D-78A Triple Box Culvert, Details No. 1

D-78B Triple Box Culvert, Details No. 2

D-79A Box Culvert Wingwall Types A, B and C, Details No. 1

D-79B Box Culvert Wingwall Types A, B and C, Details No. 2

D-80A Box Culvert Warped Wingwalls, Details No. 1

TABLE OF CONTENTS

D-80B Box Culvert Warped Wingwalls, Details No. 2

D-81A Box Culvert Miscellaneous Details No. 1

D-81B Box Culvert Miscellaneous Details No. 2

D-82 Debris Fence

ELECTRICAL SYSTEMS

E-1 Street Lighting Standard

E-2 Grounding of Concrete Lighting Standards

E-33 Pedestal for Electrical Equipment

GENERAL SURFACE IMPROVEMENTS

G-1 Curbs and Gutters - Separate

G-2 Curbs and Gutters - Combined

G-3 Monolithic Curb, Gutter and Sidewalk

G-4 Curb and Gutter - Rolled

G-5 Dikes - Asphalt Concrete

G-6 Curbs and Gutter - Medians

G-7 Sidewalk - Typical Sections

G-9 Sidewalk Joint Locations

G-10 Concrete Joint Details

G-11 Portland Cement Concrete Curb, Gutter, Sidewalk & Pavement Removal and Replacement

G-12 Cross Gutter

G-13 Mid-Block Cross Gutter

G-14 Concrete Driveways

G-15 Driveway Location - Adjacent to Curb Returns and Street Lines

G-16 Driveway Location and Width Requirements

G-17 Alley Apron

G-18 Concrete Pavement, Width 40′ or Less

G-19 Concrete Pavement, Width 40′ to 62′

G-20 Concrete Pavement, Alley Section, Width 53′ to 69′

G-21 Concrete Pavement, Alley Section, Width 40′ or Less

G-22 Cutoff Wall at End of Pavement

G-23 Cutoff Wall at End of Alley Pavement

G-24 Trench Resurfacing Types A and B

G-25 Trench Resurfacing Types C and D

G-26 Concrete Driveway Commercial Alternate

G-27 Pedestrian Ramp Types A and B

G-28 Pedestrian Ramp Types A-1 and B-1

G-29 Pedestrian Ramp, Type C

G-30 Pedestrian Ramp, Type C-1

G-31 Pedestrian Ramp, Type D

G-32 General Notes for Pedestrian Ramp

TABLE OF CONTENTS

G-33 Narrow Trenching Types A & B, Backfill and Resurfacing

G-34 Narrow Trenching Types C & D, Backfill and Resurfacing

G-35 Narrow Trenching Types E & F, Backfill and Resurfacing

G-36 Slurry Backfill

SPRINKLER IRRIGATION SYSTEMS

I-1 Shrubbery Sprinkler Head, Fixed Spray Type

I-2 Sprinkler Head, Pop Up Spray Type

I-3 Lawn Sprinkler Head, Pop Up Rotary (With Swing Joint)

I-5 Quick Coupling Valve

I-6 Hose Bibb (Garden Valve)

I-7 Backflow Preventer Atmospheric Vacuum Breaker (2" and Smaller)

I-8 Backflow Preventer Continuous Pressure Vacuum Breaker Assembly (2" and Smaller)

I-9 Backflow Preventer, Reduced Pressure Principle Assembly Larger Than 2"

I-12 Gate Valve (2" and Smaller)

I-13 Manual Valves

I-14 Remote Control Valve

I-15 Electrical Pull Box for Direct Burial Control Wires and Splice Details

I-16 Direct Burial Control Wire

I-17 Irrigation System Electric Controller Clock Pedestal Mounting

I-18 Irrigation System Electric Controller Clock Wall Mounting

I-19 Impact Head - Above Ground Pipe Installation

I-20 Pinning of Pipe - Above Ground Pipe Installations

I-21 Manual Control Valve and Gate Valve Installation for Above Ground Pipe Installations

I-22 Quick Coupler Assembly - Above Ground Pipe Installations

I-23 Swing Joint and Pipe Installation on Slopes Above Ground Pipe Installations

I-24 Double Swing Joint - Above Ground Pipe Installations

I-25 Trench Detail P.V.C. and/or Copper Pipe (3" and Smaller)

I-26 Trench Detail - Asbestos Cement Pipe and 4" and Larger P.V.C.

I-27 Valve Well and Cover

I-28 Connection Detail for New Asbestos Cement Supply Mains

I-29 Connection Detail for Existing Supply Mains

I-30 Impact Head (With Swing Joint)

I-31 Backflow Preventer, Reduced Pressure Principle Assembly 2" and Smaller

I-32 Protective Guard Fence for Backflow Devices

TABLE OF CONTENTS

I-33 Manifold Assembly, Remote Control Valve

I-34 Shrub Sprinkler Head, Rotor Type

LANDSCAPING

L-1 Tree and Shrub Planting

L-2 Tree Staking

L-3 Concrete Mowing Strip

L-4 Steel Grate Tree Well Cover

L-5 Light Pole Pad in Turf Areas

MISCELLANEOUS

M-1 24" Manhole Frame and Cover Heavy Duty

M-2 24" Manhole Frame and Cover Light Duty

M-3 36" Manhole Frame and Two Concentric Covers - Heavy Duty

M-4 Manhole Cover Locking Device

M-5 Chain Link Gate

M-6 Chain Link Fence

M-9 Guard Post and Barricade

M-10 Street Survey Monument

M-11 Bench Mark - Brass Plug

M-12 Datums

M-13 Survey Monuments

M-14 Metric Equivalents

M-15 Joint Trench Utilities Location

M-16 Demountable Post

M-17 Tennis Court Fence Chain Link

M-18 Drinking Fountain

M-19 Fire Hydrant Markers

M-20 Chain Link Fence, Details

M-21 Underground Typical Location, Conversion/Replacement/ Upgrade

M-22 Utility Locations in Local and Collector Streets

M-23 Utility Locations in Major Streets, Prime Arterials and Expressways

M-24 Pedestrian Protective Railings, Details No. 1

M-25 Pedestrian Protective Railings, Details No. 2

M-26 Concrete Steps

M-27 Handicapped Parking Spaces

M-28 Disabled Parking Sign

M-29 Pavement Symbol, Disabled Parking

M-30 Guard Rail Standards

M-31 Metal Beam Guard Railing

M-32 Metal Beam Guard Railing Hardware

M-33 Metal Beam Guard Railing Posts and Blocks

M-34 Guard Rail Flares

M-35 Guard Rail Flares

M-36 Metal Beam Guard Railing Miscellaneous Details

TABLE OF CONTENTS

M-37 Guard Rail End Anchors (Breakaway)

M-38 Guard Rail End Anchors (Breakaway Hardware)

M-39 Barrier and Guard Rail End Anchors

M-40 Guard Rail Connections to Bridge Rails, Retaining Walls and Abutments

M-41 Guard Rail Connection to Bridge Sidewalk and Curbs

M-42 Concrete Barrier Type 50

M-43 Concrete Barrier Type 50E

M-44 Temporary Railing (Type K)

SEWERAGE SYSTEMS

S-2 Manhole - 5'x 3' Diameter

S-3 Sewer Main Cleanout

S-4 Pipe Bedding and Trench Backfill for Sewers

S-6 Concrete Cradle

S-7 Concrete Encasement

S-8 Concrete Backfill

S-9 Concrete Anchor

S-10 Cutoff Wall

S-11 Concrete Protection for Existing Sewer Pipe

S-12 Concrete Support for Undercut Sewer Pipe

S-13 House Connection (Sewer Lateral)

S-14 Deep Cut House Connection (Sewer Lateral)

S-15 House Connection Sewer Repair

S-16 Cleanout - Force Main

S-17 Manhole - 4'x3' Diameter (for 15" Maximum Diameter Pipe)

S-19 Metallic Tape Locator for Non-Metallic Sewer Pipe

WATER SYSTEMS

W-1 1" Water Service

W-2 1 1/2" and 2" Water Services

W-3 1" and 2" Manual Air Releases

W-4 1" and 2" Air and Vacuum Valves

W-5 4" and 6" Air and Vacuum Valves

W-6 2" Blow-Off Assembly Type A

W-7 2" Blow-Off Assemblies Types B, C and D

W-8 4" and 6" Blow-Off Assemblies Type A

W-9 4" and 6" Blow-Off Assemblies Type B

W-10 6" Fire Hydrant

W-11 Fire Hydrant Locations

W-12 Valve Well Installation

W-13 Valve Stem Extension

W-14 Air and Vacuum Valve Enclosures

W-15 Meter Box Locations

W-16 Protection Post

W-17 Concrete Thrust Blocks

W-18 Thrust Block Bearing Areas

W-19 Concrete Valve Blocking

TABLE OF CONTENTS

W-20 Anchor Block (Vertical Bend Only)

W-21 Pipe Bedding and Trench Backfill for Water Mains

W-22 Thrust Anchor for Water Main Reducer - 4" thru 16"

W-23 Multiple Service Assembly Dead End Main

W-24 Split Butt Strap

W-25 Metallic Tape Locator for Non-Metallic Water Pipe

W-26 Backflow Preventer, Reduced Pressure Principle

APPENDIX A

Traffic Control Plans

CONCRETE STRUCTURES

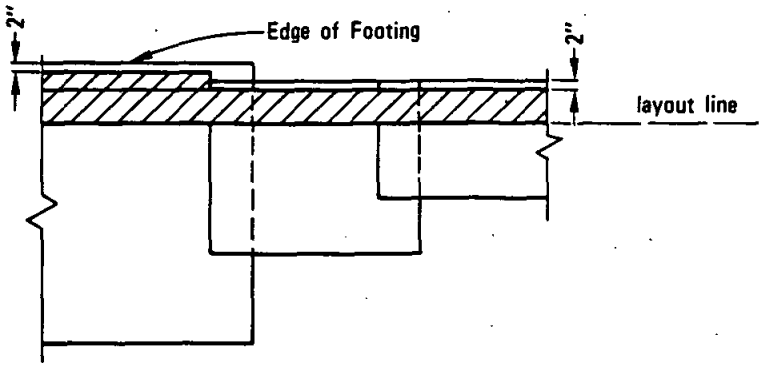

PLAN

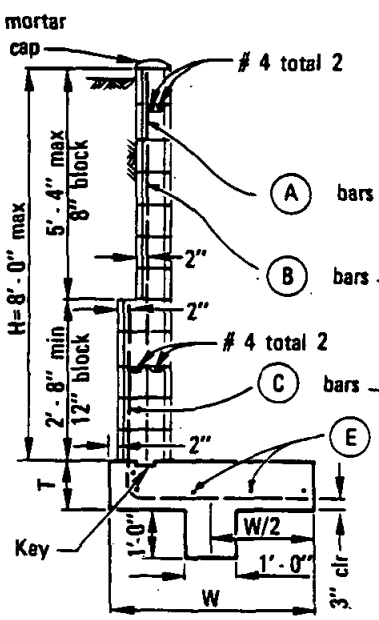

TYPICAL SECTION
over 5' - 4"

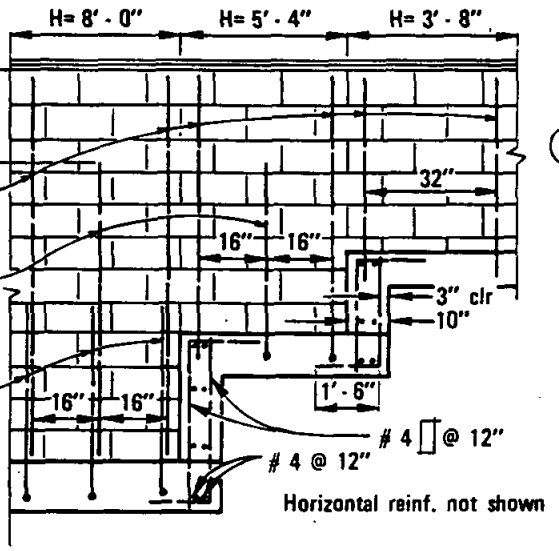

ELEVATION

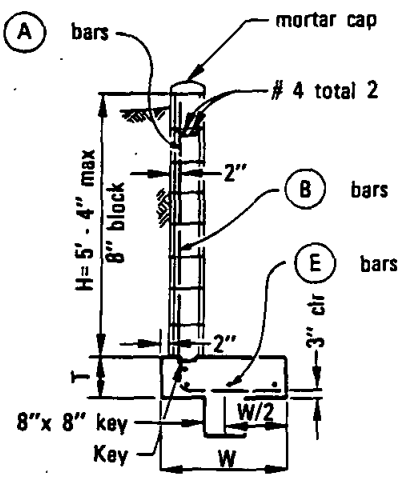

TYPICAL SECTION
5' - 4" max

DIMENSIONS AND REINFORCING STEEL			
H (max)	3' - 8"	5' - 4"	8' - 0"
T (min)	0' - 8"	0' - 10"	1' - 0"
W (min)	2' - 4"	3' - 6"	5' - 4"
(A) bars	# 4 @ 32"	# 4 @ 32"	# 4 @ 32"
(B) bars	——	# 4 @ 32"	# 4 @ 32"
(C) bars	——	——	# 6 @ 16"
(E) bars	# 4 total 4	# 4 total 5	# 4 total 6
max soil press. (psf)	500	600	800

NOTES

1. See Standard Drawings C-7 and C-8 for additional notes and details.
2. Fill all block cells with grout.

Revision	By	Approved	Date
Title	RC	M.B.	5-86
TITLE	RC	M.H.	7-08

SAN DIEGO REGIONAL STANDARD DRAWING

MASONRY RETAINING WALL TYPE 1
(LEVEL BACKFILL)

RECOMMENDED BY THE SAN DIEGO REGIONAL STANDARDS COMMITTEE

Allan A. Kershaw — Dec. 1975
Coordinator R.C.E. 19807 — Date

DRAWING NUMBER C-1

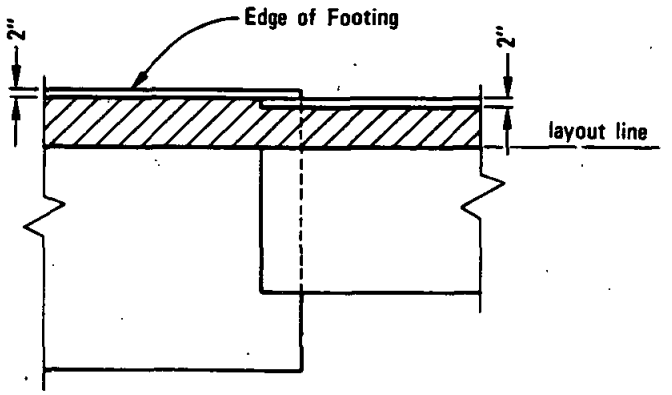

PLAN

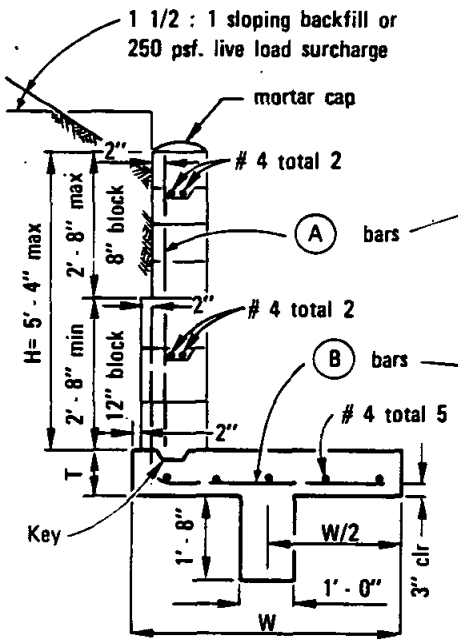

TYPICAL SECTION
over 3' - 8"

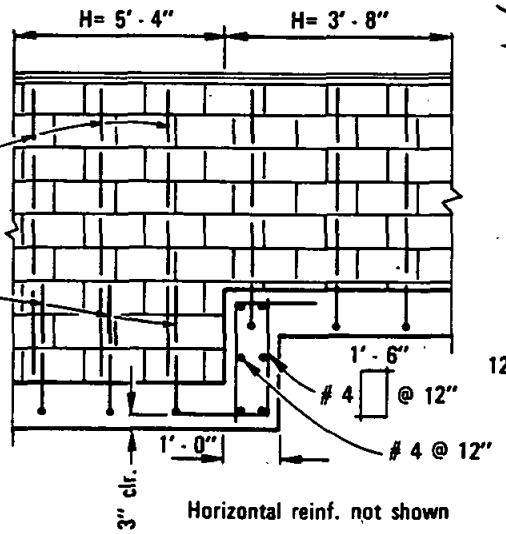

ELEVATION

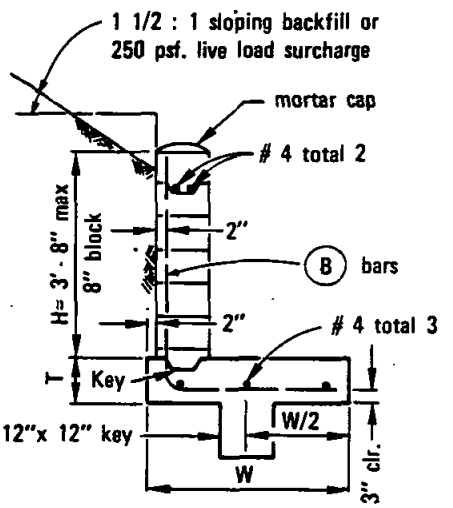

TYPICAL SECTION
3' - 8" max.

DIMENSIONS AND REINFORCING STEEL		
H (max)	5' - 4"	3' - 8"
T (min)	0' - 10"	0' - 10"
W (min)	5' - 0"	3' - 9"
A bars	# 4 @ 16"	———
B bars	# 6 @ 16"	# 4 @ 16"
max. toe press. (psf)	700	550

NOTES

1. See Standard Drawings C-7 and C-8 for additional notes and details.
2. Fill all block cells with grout.

RECOMMENDED BY THE SAN DIEGO REGIONAL STANDARDS COMMITTEE

Allan A. Kershaw Dec. 1975
Coordinator R.C.E. 19807 Date

DRAWING NUMBER C-2

SAN DIEGO REGIONAL STANDARD DRAWING

MASONRY RETAINING WALL TYPE 2
(LIVE LOAD SURCHARGE OR SLOPING BACKFILL)

Revision	By	Approved	Date
REINST.	RC	A.H.	8-88

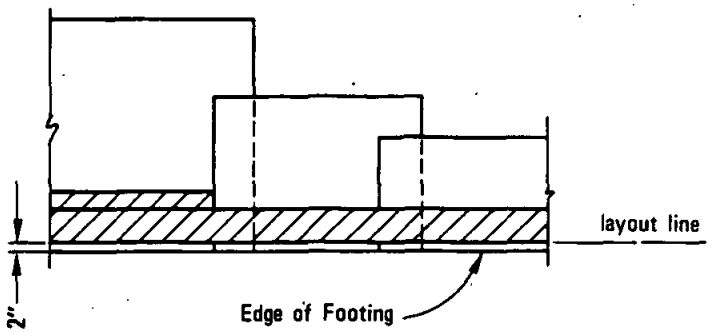

PLAN

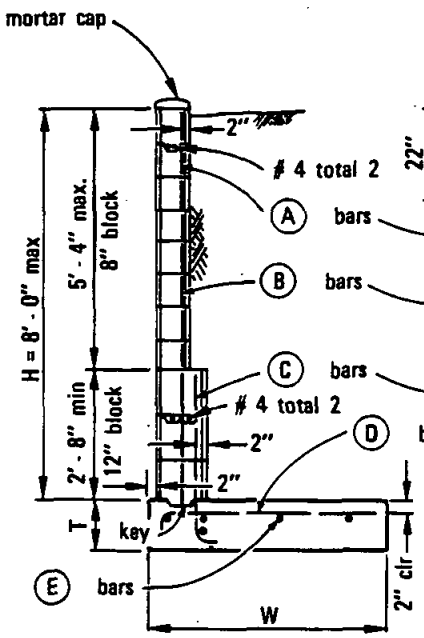

TYPICAL SECTION
over 5' - 4"

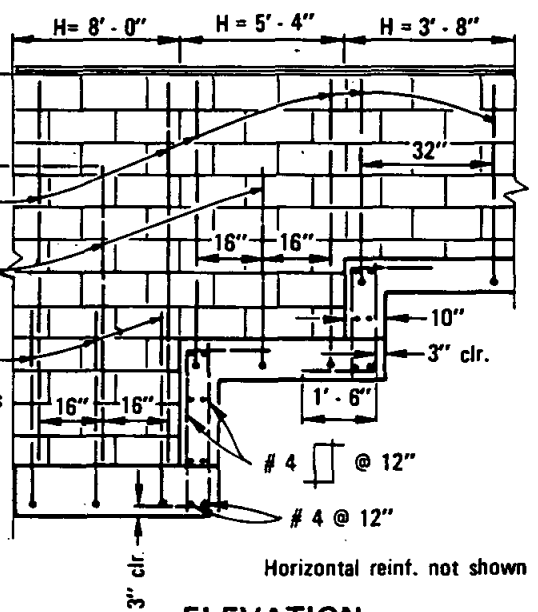

ELEVATION

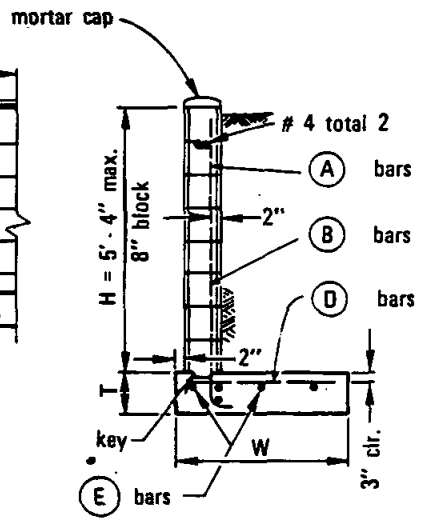

TYPICAL SECTION
5' - 4" max

DIMENSIONS AND REINFORCING STEEL			
H (max)	3' - 8"	5' - 4"	8' - 0"
T (min)	0' - 8"	0' - 10"	1' - 0"
W (min)	2' - 4"	3' - 2"	4' - 9"
A bars	# 4 @ 32"	# 4 @ 32"	# 4 @ 32"
B bars	——	# 4 @ 32"	# 4 @ 32"
C bars	——	——	# 6 @ 16"
D bars	# 4 @ 32"	# 4 @ 16"	# 6 @ 16"
E bars	# 4 total 4	# 4 total 5	# 4 total 6
max. soil press. (psf)	1100	1600	2200

NOTES

1. See Standard Drawings C-7 and C-8 for additional notes and details.
2. Fill all blockcells with grout.

Revision	By	Approved	Date
REINST.	JC	G.H.	8-88

SAN DIEGO REGIONAL STANDARD DRAWING

MASONRY RETAINING WALL TYPE 3
(LEVEL BACKFILL)

RECOMMENDED BY THE SAN DIEGO REGIONAL STANDARDS COMMITTEE

Coordinator R.C.E. 19807 — Dec. 1975 Date

DRAWING NUMBER C-3

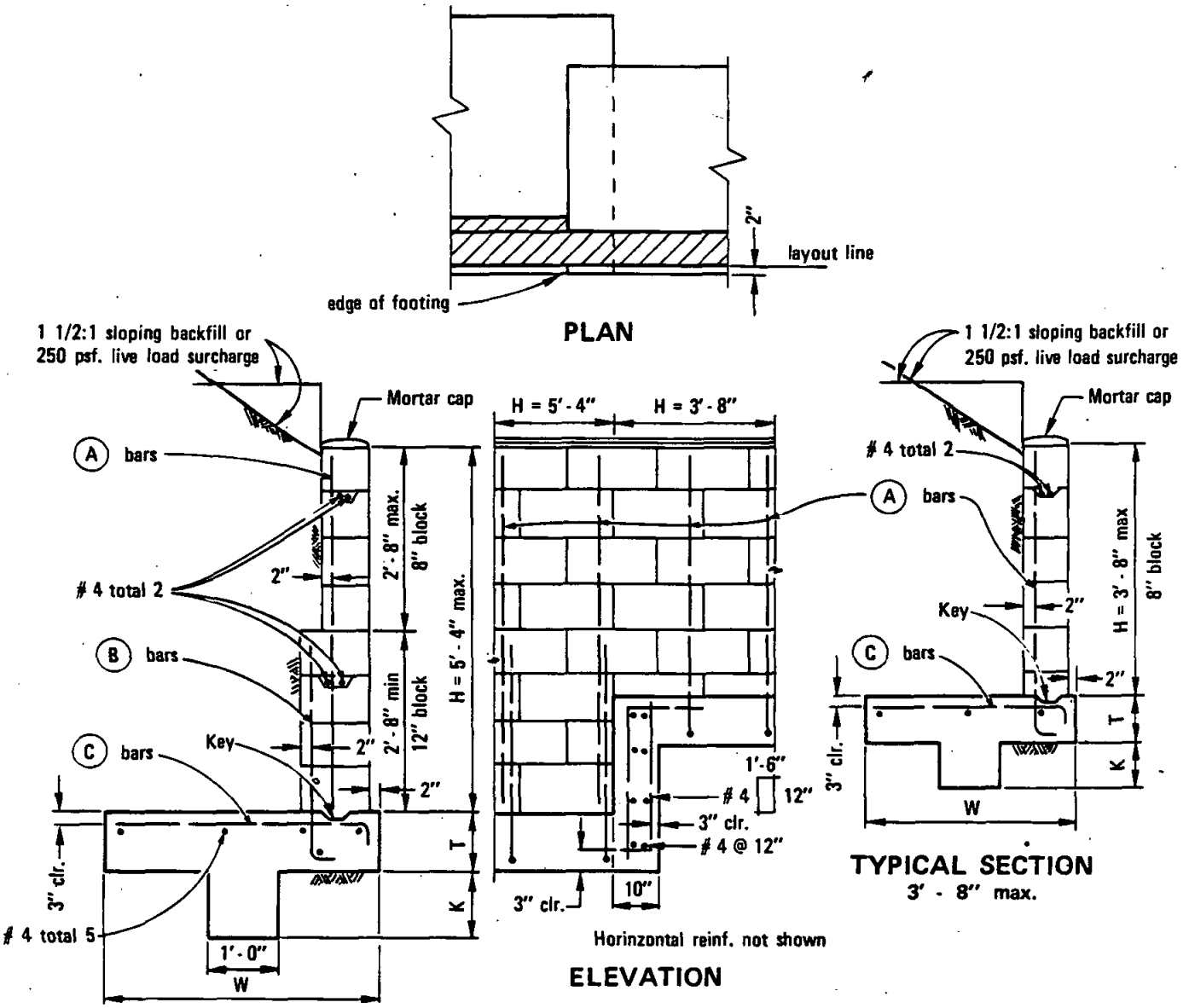

DIMENSIONS AND REINFORCING STEEL				
H (max)	5' - 4"		3' - 8"	
T (min)	0' - 10"		0' - 8"	
W (min)	4' - 0"		3' - 0"	
(A) bars	# 4 @ 16"		# 4 @ 16"	
(B) bars	# 6 @ 16"		———	
Surcharge	sloping	live load	sloping	live load
(C) bars	# 6 @ 8"	# 6 @ 16"	# 6 @ 16"	# 6 @ 16"
K (min)	1' - 0"	0' - 8"	1' - 0"	0' - 8"
Toe press.	2700 psf.	1900 psf.	1700 psf	1430 psf

NOTES

1. See Standard Drawings C-7 and C-8 for additional notes and details.
2. Fill all block cells with grout.

RECOMMENDED BY THE SAN DIEGO REGIONAL STANDARDS COMMITTEE

Allan A. Kerchenal — Dec. 1975
Coordinator R.C.E. 19807 — Date

DRAWING NUMBER **C-4**

SAN DIEGO REGIONAL STANDARD DRAWING

MASONRY RETAINING WALL TYPE 4
(LIVE LOAD SURCHARGE OR SLOPING BACKFILL)

Revision	By	Approved	Date
Title	RC	TMB	5/86
TITLE	RC	A.H.	7/88

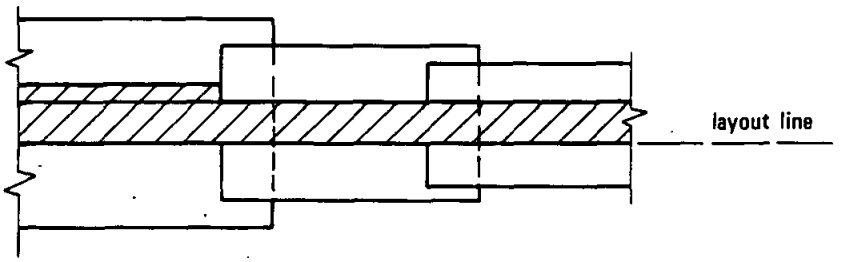

PLAN

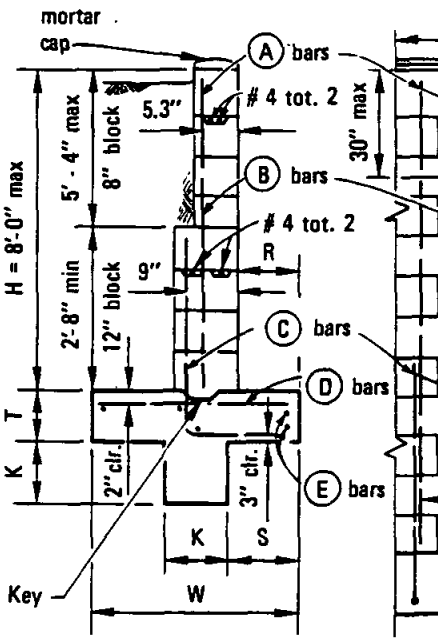

TYPICAL SECTION
over 5' - 4"

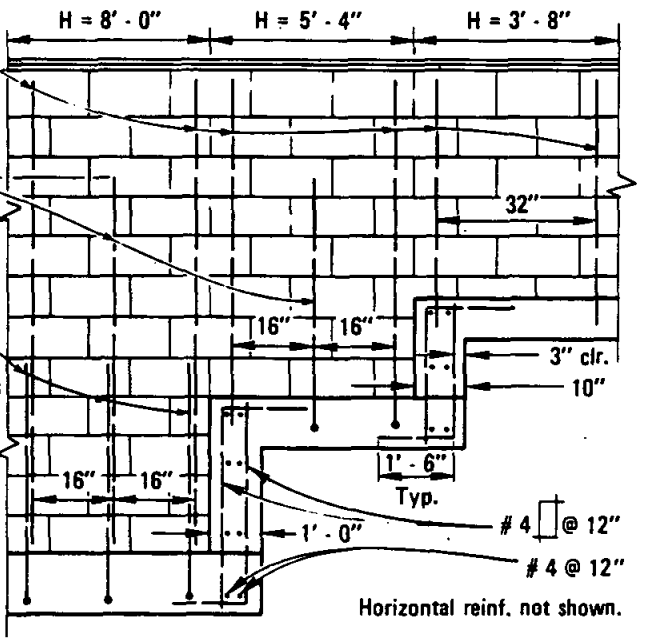

ELEVATION

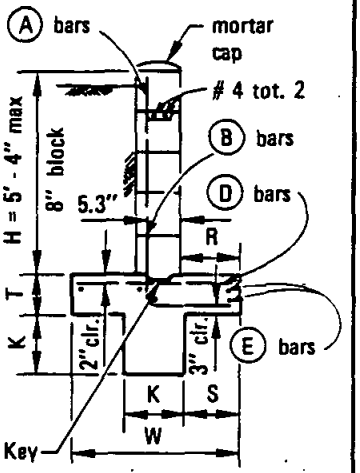

TYPICAL SECTION
5' - 4" max

DIMENSIONS AND REINFORCING STEEL			
H (max)	3' - 8"	5' - 4"	8' - 0"
T (min)	0' - 8"	0' - 10"	1' - 0"
W (min)	2' - 1"	3' - 1"	4' - 3"
R	0' - 9"	1' - 2"	1' - 5"
S	0' - 8 1/2"	1' - 1/2"	1' - 7 1/2"
K	0' - 8"	0' - 8"	0' - 12"
(A) bars	# 4 @ 32"	# 4 @ 32"	# 4 @ 32"
(B) bars	———	# 4 @ 32"	# 4 @ 32"
(C) bars	———	———	# 7 @ 16"
(D) bars	# 4 @ 32"	# 4 @ 16"	# 4 @ 16"
(E) bars	# 4 total 5	# 4 total 5	# 4 total 6
max soil press. (psf)	774	1030	1660

NOTES

1. See Standard Drawing C-7 and C-8 for additional notes and details
2. Fill all block cells with grout.

Revision	By	Approved	Date
Title		M.B.	5-86
TITLE		A.H.	7-88

SAN DIEGO REGIONAL STANDARD DRAWING

MASONRY RETAINING WALL TYPE 5
(LEVEL BACKFILL)

RECOMMENDED BY THE SAN DIEGO REGIONAL STANDARDS COMMITTEE

Allan O. Kaufman — Dec. 1975
Coordinator R.C.E. 19807 — Date

DRAWING NUMBER C-5

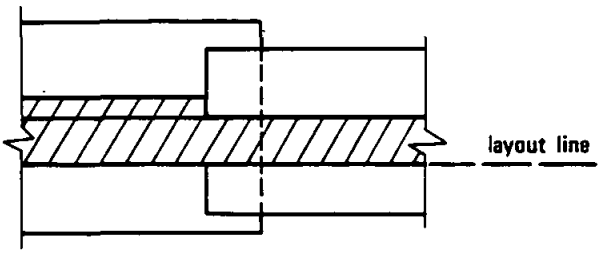

PLAN

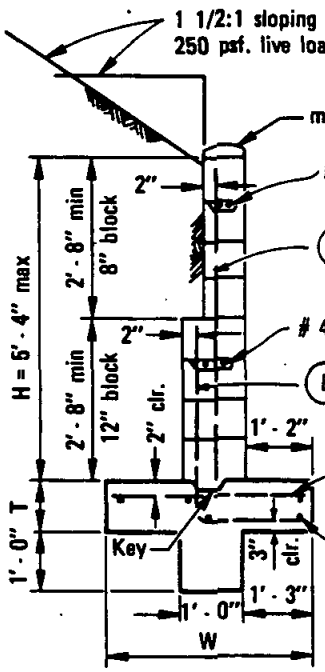

TYPICAL SECTION
over 3' - 8"

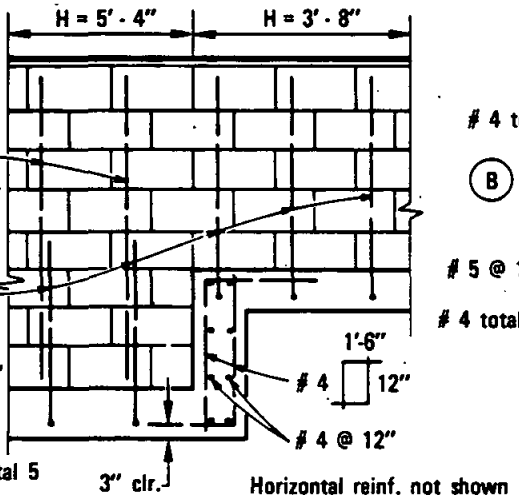

ELEVATION

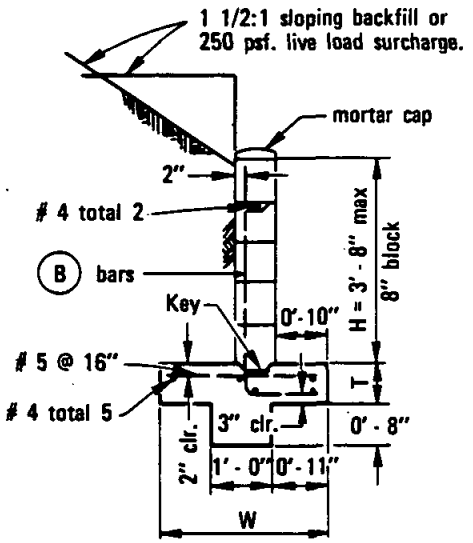

TYPICAL SECTION
3' - 8" max

NOTES

1. See Standard Drawings C-7 and C-8 for additional notes and details.
2. Fill all block cells with grout.

DIMENSIONS AND REINFORCING STEEL		
H (max)	5' - 4"	3' - 8"
T (min)	0' - 10"	0' - 8"
W (min)	3' - 10"	2' - 9"
A bars	# 4 @ 16"	——
B bars	# 6 @ 16"	# 4 @ 16"
Max. Toe Press. P.S.F.	2000	1400

RECOMMENDED BY THE SAN DIEGO REGIONAL STANDARDS COMMITTEE

Coordinator R.C.E. 19807 — Dec. 1975 Date

DRAWING NUMBER C-6

SAN DIEGO REGIONAL STANDARD DRAWING

MASONRY RETAINING WALL TYPE 6
(LIVE LOAD SURCHARGE OR SLOPING BACKFILL)

Revision	By	Approved	Date

DESIGN CONDITIONS:

Walls are to be used for the loading conditions shown for each type wall. Design H shall not be exceeded.
Footing key is required except as shown otherwise or when found unnecessary by the Engineer.
Special footing design is required where foundation material is uncapable of supporting toe pressure listed in table.

DESIGN DATA:

Reinforced Concrete:

Fc = 1200 psi F'c = 3000 psi
Fs = 20,000 psi n = 10

Reinforced Masonry:

F'm = 600 psi Fm = 200 psi
Fs = 20,000 psi n = 50
Earth = 120 pcf and Equivalent Fluid Pressure = 36 psf per foot of height. Walls shown for 1½:1 unlimited sloping surcharge are designed in accordance with Rankline's formula for unlimited sloping surcharge with a ϕ = 33° 42'.

REINFORCEMENT:

Intermediate grade, hard grade, or rail steel deformation shall conform to ASTM A615, A616, A617. Bars shall lap 40 diameters, where spliced, unless otherwise shown on the plans. Bends shall conform to the Manual of Standard Practice, A.C.I. Backing for hooks is four diameters. All bar embedments are clear distances to outside of bar. Spacing for parallel bars is center to center of bars.

MASONRY:

All reinforced masonry retaining walls shall be constructed of regular or light weight standard units conforming to the "Standard Specifications for Public Works Construction."

JOINTS:

Vertical control joints shall be placed at 32 foot intervals maximum. Joints shall be designed to resist shear and other lateral forces while permitting longitudal movement. Vertical expansion joints shall be placed at 96 foot intervals maximum.

CONCRETE:

Footing concrete shall be 560–C–3250, using B aggregate when placing conditions permit.

BACKFILL:

No backfill material shall be placed against masonry retaining walls until grout has reached design strength or until grout has cured for a minimum of 28 days. Compaction of backfill material by jetting or ponding with water will not be permitted. Each layer of backfill shall be moistened as directed by the Engineer and thoroughly tamped, rolled or otherwise compacted until the relative compaction is not less than 90%.

FENCING:

Safety fencing shall be installed at the top of the wall as required by the agency.

INSPECTIONS:

Call for inspections as follows:

A. When the footing has been formed, with the steel tied securely in final position, and is ready for the concrete to be placed.

B. Where cleanout holes are not provided:

(1) After the blocks have been laid up to a height of 4', or full height for walls up to 5', with steel in place but before the grout is poured, and . . . . .

(2) After the first lift is properly grouted, the blocks have been laid up to the top of the wall with the steel tied securely in place but before the upper lift is grouted.

Where cleanout holes are provided:

After the blocks have been laid up to the top of the wall, with the steel tied securely in place, but before grouting.

C. After grouting is complete and after rock or rubble wall drains are in place but before earth backfill is placed.

D. Final inspection when all work has been completed.

CONCRETE GROUT AND MORTAR MIXES:

Concrete grout shall attain a minimum compressive strength of 2,000 psi in 28 days and mortar shall attain 1,800 psi in 28 days. All cells shall be filled with grout. Rod or vibrate grout within 10 minutes of pouring to insure consolidation. Bring grout to a point 2" from the top of masonry units when grouting of second lift is to be continued at another time.

MORTAR KEY:

To insure proper bonding between the footing and the first course of block, a mortar key shall be formed by embedding a flat 2 X 4 flush with and at the top of the freshly poured footing. The 2 X 4 should be removed after the concrete has started to harden (approximately 1 hour).
A mortar key may be omitted if the first course of block is set into the fresh concrete when the footing is poured, and a good bond is obtained.

WALL DRAINS:

Wall drains shall be provided in accordance with Standard Drawing C-8.

SOIL:

All footings shall extend at least 12 inches into undisturbed natural soil or approved compacted fill. Soil should be dampened prior to placing concrete in footings.

Revision	By	Approved	Date
New Des.	TKP	M.B.	10-82
Notes		M.B.	5-86
Notes	RC	A.H.	7-88

SAN DIEGO REGIONAL STANDARD DRAWING

GENERAL NOTES FOR MASONRY RETAINING WALLS

RECOMMENDED BY THE SAN DIEGO REGIONAL STANDARDS COMMITTEE

Allan A. Kaufman Dec. 1975
Coordinator R.C.E. 19807 Date

DRAWING NUMBER C-7

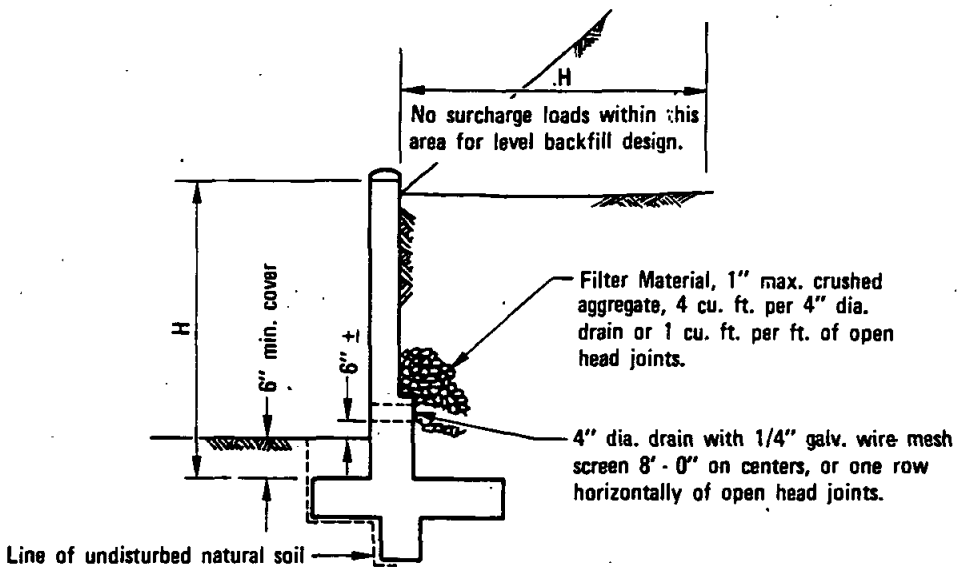

TYPICAL SECTION

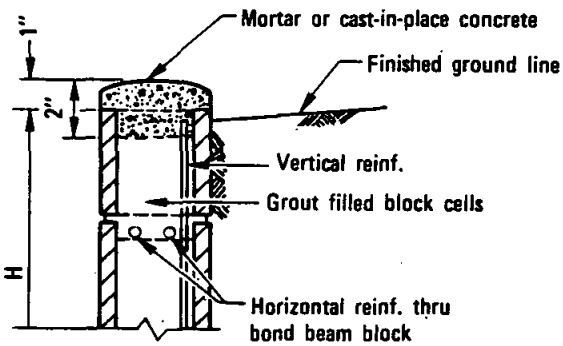

CAP DETAIL

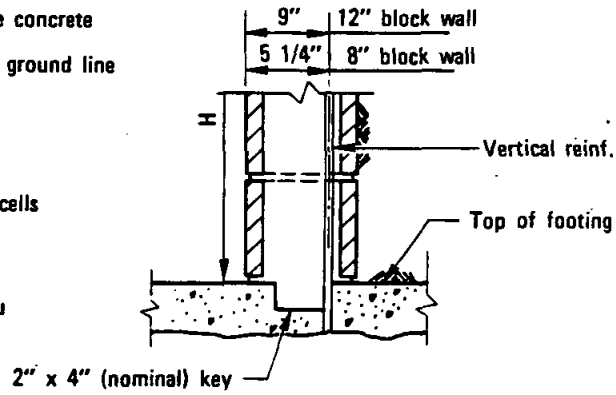

KEY DETAIL

NOTES:

1. All masonry retaining walls shall be constructed with cap, key and drainage details as shown hereon.
2. 4" diameter drain may be formed by placing a block on it's side.

RECOMMENDED BY THE SAN DIEGO REGIONAL STANDARDS COMMITTEE Coordinator R.C.E. 19807 — Dec. 1975 Date	SAN DIEGO REGIONAL STANDARD DRAWING	Revision	By	Approved	Date
		Note 2	RC	A.H.	7/88
DRAWING NUMBER C-8	DETAILS FOR MASONRY RETAINING WALL				

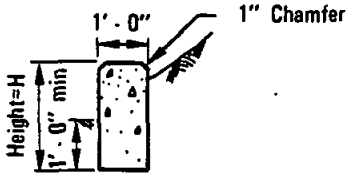

TYPE–A WALL
(Applicable for all types of backfill loadings)

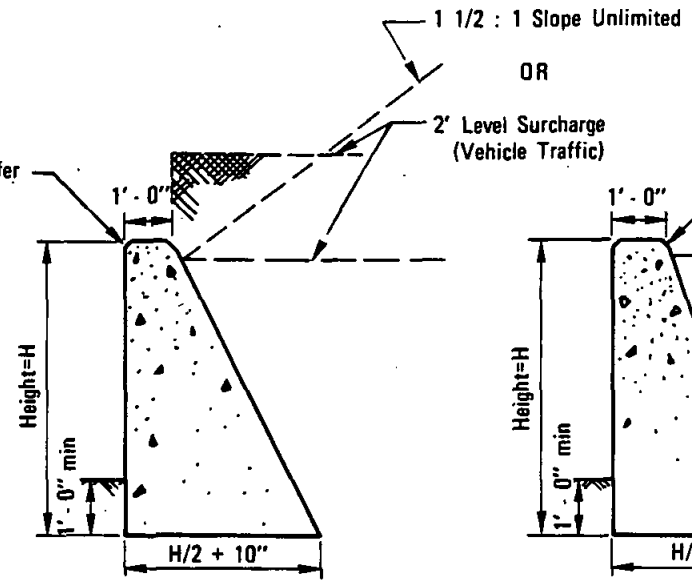

TYPE–B WALL

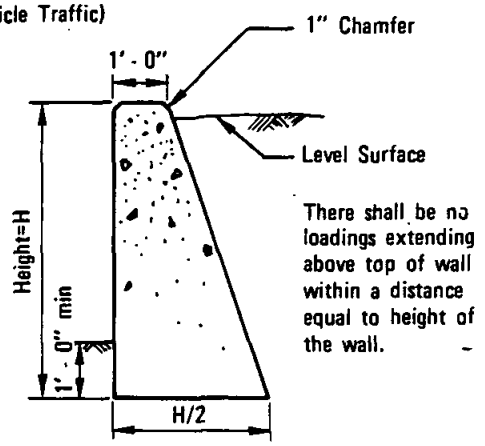

There shall be no loadings extending above top of wall within a distance equal to height of the wall.

TYPE–C WALL

WALL TYPE	HEIGHT	BASE	CONC CF/FT
A	1' - 6"	1' - 0"	1.50
	2' - 0"	1' - 0"	2.00
B	3' - 0"	2' - 4"	4.99
	4' - 0"	2' - 10"	7.66
	5' - 0"	3' - 4"	10.82
	6' - 0"	3' - 10"	14.49
C	3' - 0"	1' - 6"	3.75
	4' - 0"	2' - 0"	6.00
	5' - 0"	2' - 6"	8.75
	6' - 0"	3' - 0"	12.00

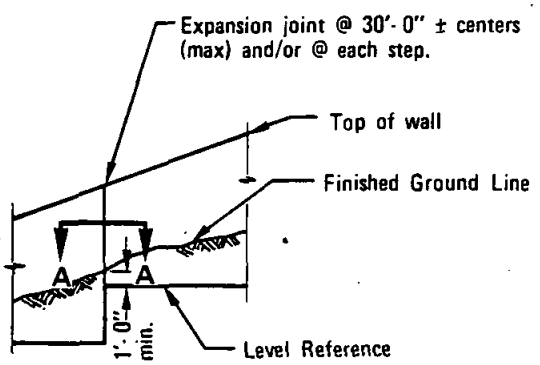

TYPICAL ELEVATION

NOTE
See Standard Drawing C-10 for Section A–A, notes and details.

Revision	By	Approved	Date

SAN DIEGO REGIONAL STANDARD DRAWING

GRAVITY RETAINING WALLS

RECOMMENDED BY THE SAN DIEGO REGIONAL STANDARDS COMMITTEE

Coordinator R.C.E. 19807 — Dec. 1975 Date

DRAWING NUMBER **C-9**

CONCRETE

Concrete shall be 560-C-3250.

DESIGN CONDITIONS

Walls are to be used for the loading conditions shown for each type wall. Design H may be exceeded by six inches before going to next size.

DESIGN DATA

Fc = 1200 psi F'c = 3000 psi
Earth = 120 pcf and equivalent fluid pressure = 36 psf per foot of height

Walls shown for 1 1/2:1 unlimited sloping surcharge are designed in accordance with Rankine's Formula for unlimited sloping surcharge with $\phi = 33° \ 42'$.
Note: Maximum toe pressure under wall footing = 1 1/2 tons. Special design required where footing material is incapable of supporting this pressure.

EXCAVATION AND BACKFILL

Compaction of backfill material by jetting or ponding with water will not be permitted.

Each layer of backfill shall be moistened as directed by the Engineer and thoroughly tamped, rolled or otherwise compacted until the relative compaction is not less than 90 percent.

No backfill material shall be deposited against concrete retaining walls until the concrete has developed a strength of 2,500 pounds per square inch in compression as determined by test cyclinders, or until 28 days after wall has been placed.

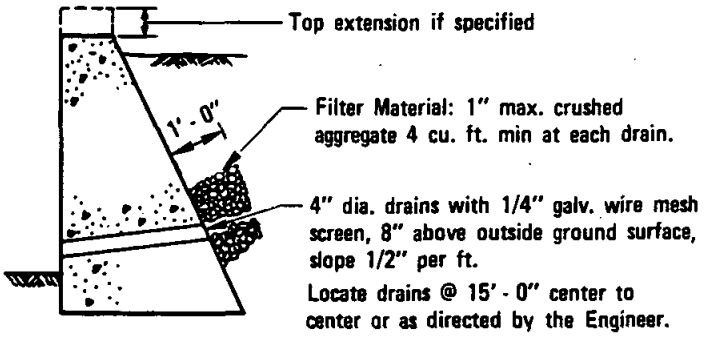

TYPICAL DRAINAGE
WHEN H IS GREATER THAN 4' - 0"

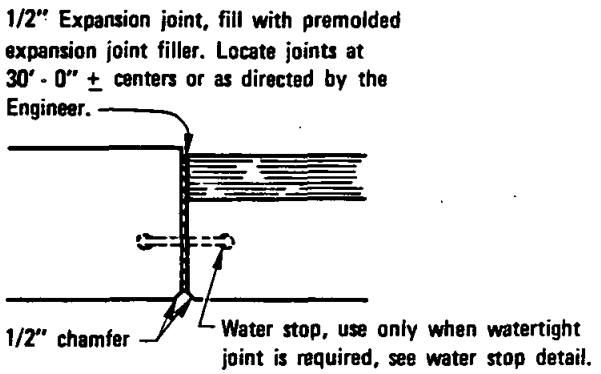

SECTION A–A

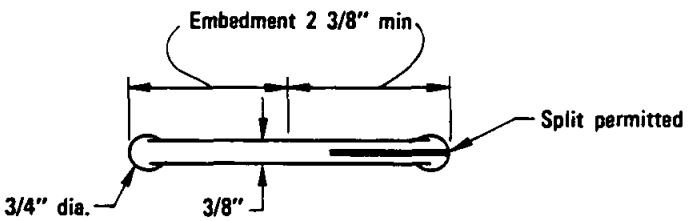

RUBBER WATERSTOP
Use only when watertight joint is required.

RECOMMENDED BY THE SAN DIEGO REGIONAL STANDARDS COMMITTEE	SAN DIEGO REGIONAL STANDARD DRAWING	Revision	By	Approved	Date
Allen A Kashani Dec. 1975 Coordinator R.C.E. 19807 Date		Conc.	RC	M.B.	5-86
DRAWING NUMBER C-10	GENERAL NOTES AND DETAILS FOR GRAVITY RETAINING WALLS				

TYPICAL LAYOUT EXAMPLE

For joints required, see Details 3-3 and 3-4, drawing C-15.

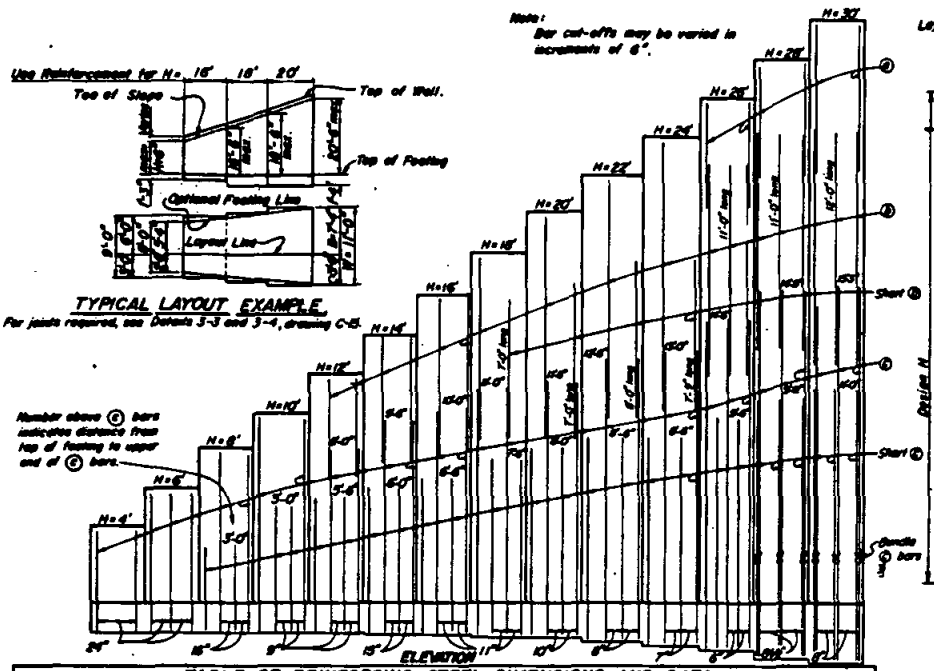

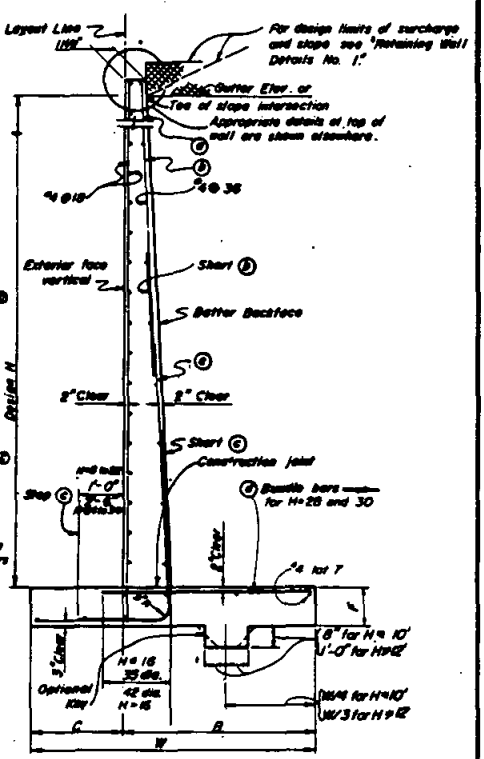

SPREAD FOOTING SECTION

Note:
For details not shown and drainage notes see "Retaining Wall Details No. 1", drawing C-13.

Quantities apply to Design H portion and exclude the added portion above "Gutter Elevation."

TABLE OF REINFORCING STEEL DIMENSIONS AND DATA

Design H		4'	6'	8'	10'	12'	14'	16'	18'	20'	22'	24'	26'	28'	30'
W		3'-2"	4'-2"	5'-2"	6'-2"	7'-2"	8'-0"	9'-0"	10'-0"	11'-0"	12'-0"	13'-3"	14'-3"	15'-3"	16'-9"
C		1'-0"	1'-4"	1'-8"	2'-0"	2'-4"	2'-8"	3'-0"	3'-4"	3'-8"	4'-0"	4'-3"	4'-9"	5'-1"	5'-6"
B		2'-2"	2'-10"	3'-6"	4'-2"	4'-10"	5'-4"	6'-0"	6'-8"	7'-4"	8'-0"	8'-10"	9'-4"	10'-2"	11'-3"
f Spread Ftg.		1'-8"	1'-8"	1'-8"	1'-8"	1'-8"	1'-8"	1'-8"	1'-8"	1'-8"	1'-8"	1'-8"	1'-11"	2'-2"	2'-4"
Footing		1/2:12	1/2:12	1/2:12	1/2:12	1/2:12	1/2:12	1/2:12	1/2:12	1/2:12	1/2:12	3/4:12	3/4:12	3/4:12	1/1:12
ⓐ	bars					#4 @ 18	#4 @ 30	#4 @ 22	#7 @ 27	#8 @ 20	#8 @ 18	#8 @ 14	#8 @ 12	#8 @ 10	#8 @ 8
ⓑ	bars												#8 @ 24	#8 @ 17	#8 @ 12
ⓒ	bars	#5 @ 24	#5 @ 24	#5 @ 18	#5 @ 9	#4 @ 9	#9 @ 13	#9 @ 11	#10 @ 11	#10 @ 10	#11 @ 9	#11 @ 7	#11 @ 6	#11 @ 5	#11 @ 4
ⓓ	bars	#5 @ 24	#5 @ 24	#4 @ 18	#4 @ 9	#4 @ 9	#5 @ 13	#6 @ 11	#10 @ 11	#10 @ 10	#10 @ 8	#10 @ 7	#10 @ 6	#10 @ 5	#10 @ 4
Wall ⓐ	bars	6'-2"	6'-2"	6'-2"	10'-2"	10'-2"	10'-2"	10'-2"	6'-2"	6'-2"	6'-2"	6'-2"	6'-2"	6'-2"	6'-2"
Wall ⓑ	bars				4'-2"	4'-2"	4'-2"	4'-2"	4'-2"	4'-2"	4'-2"	2'-2"	2'-2"	2'-2"	2'-2"
f Level Footing	lbs/ft wall	1.6	1.9	2.2	2.3	2.8	3.3	3.5	4.0	4.3	4.6	4.9	5.3	5.7	6.2
f1 Sloped Footing	lbs/ft wall	1.1	1.5	2.0	2.5	2.7	3.3	3.6	4.2	4.7	5.5	5.9	6.5	7.1	7.5
1½:1 Sloped Footing	lbs/ft wall	1.5	1.7	2.1	2.5	2.9	3.4	3.8	4.3	4.8	5.4	5.8	6.5	7.2	7.5
Spread Footing	Steel lbs/ft	17	20	28	37	51	80	105	147	187	246	303	407	449	507
	Conc c/f/ft.	8.9	12.5	16.3	20.2	25.4	30.1	34.6	40.1	45.0	51.1	63.3	77.0	88.1	104.8
Pile Ftg.	Steel lbs/ft	29	32	41	70	84	113	140	172	218	290	322	427	469	528
	Conc c/f/ft.	10.2	12.7	16.7	20.8	25.2	30.1	34.8	40.6	45.7	53.1	64.7	78.6	89.9	107.0

Note:
Reinforcement detailed is to be placed in addition to that shown for spread footing. All piles not shown, see Pile Layout on plans.

● For pile footing Design H=4' use same footing dimensions as Design H=6'

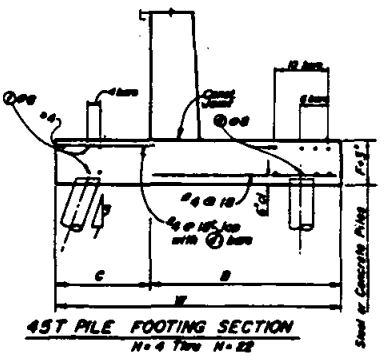

45T PILE FOOTING SECTION
H=4 Thru H=22

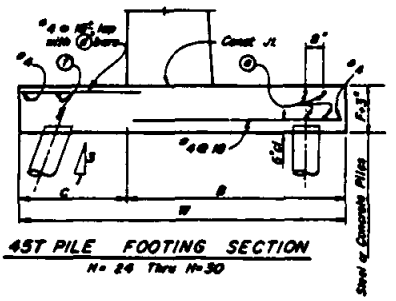

45T PILE FOOTING SECTION
H=24 Thru H=30

Revision	By	Approved	Date

SAN DIEGO REGIONAL STANDARD DRAWING

REINFORCED CONCRETE RETAINING WALL TYPE 1

RECOMMENDED BY THE SAN DIEGO REGIONAL STANDARDS COMMITTEE

Coordinator R.C.E. 19887 — Dec. 1975 Date

DRAWING NUMBER C-11

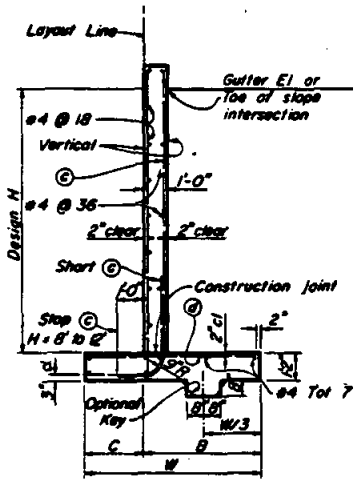

SPREAD FOOTING SECTION

Place concrete in toe against undisturbed material, except as permitted by the Engineer.

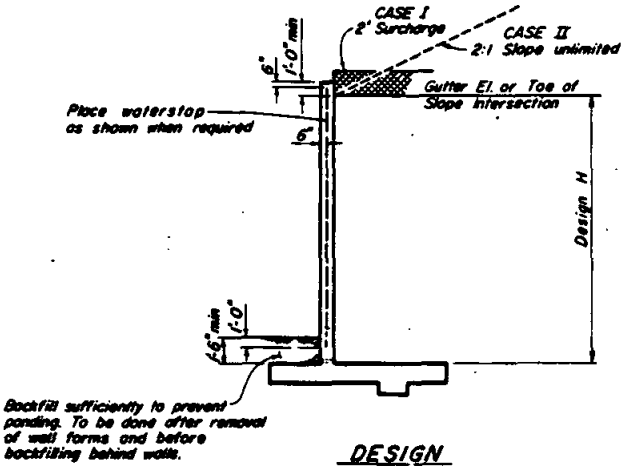

DESIGN

For drainage notes and other details, see "Retaining Wall Details No 1," drawing C-13.

Note:
Quantities apply to Design H portion and exclude the added portion above "Gutter Elevation."

TABLE OF REINFORCING STEEL DIMENSIONS AND DATA

Design H		◉ 4'	6'	8'	10'	12'
W		3'-2"	4'-2"	5'-2"	6'-2"	7'-2"
C		1'-0"	1'-4"	1'-8"	2'-0"	2'-4"
B		2'-2"	2'-10"	3'-6"	4'-2"	4'-10"
ⓒ bars		#5 @ 24	#5 @ 22	#5 @ 11	#6 @ 9	#7 @ 7½
ⓓ bars		#5 @ 24	#5 @ 22	#5 @ 22	#7 @ 18	#8 @ 15
Total ⓔ bars		6 - #6	6 - #6	6 - #6	10 - #7	10 - #7
Total ⓕ bars					4 - #7	4 - #7
CASE I - Toe Press. psf		1590	1930	2240	2550	2840
CASE II - Toe Press. psf		1060	1460	1860	2280	2700
Spread Footing	Steel lbs/ft	15	21	27	46	70
	Conc CF/ft	8.6	11.8	14.9	18.1	21.3
Pile Ftg	Steel lbs/ft	25	32	38	75	101
	Conc CF/ft	9.9	11.9	15.3	18.8	22.2

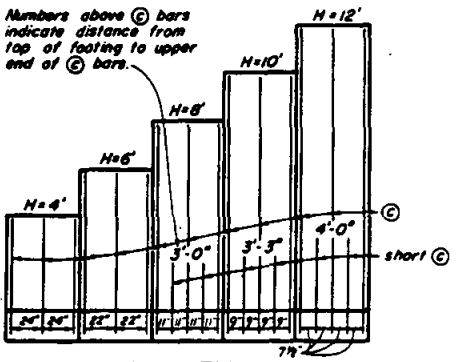

ELEVATION

Note:
Reinforcement detailed is to be placed in addition to that shown for spread footing. All piles not shown, see Pile Layout on plans.

◉ For pile footing Design H=4' use same footing dimensions as Design H=6'

NOTES

Design Conditions

Design H may be exceeded by 6" before going to the next size. Footing key is required except when found unnecessary by the Engineer. Special footing design is required where foundation material is incapable of supporting toe pressure loads listed in table.

Design Data

f_c = 1300 psi f'_c = 3250 psi f_s = 24,000 psi
n = 10 earth = 120 pcf

Case I Equivalent fluid pressure = 36 psf max for determination of toe pressure. 27 psf min for determination of heel pressure.

Case II - Earth pressure determined from Rankine's formula with ϕ = 33°-42°.

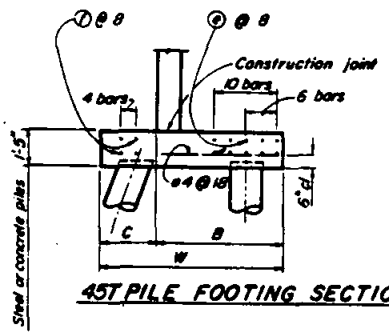

45T PILE FOOTING SECTION

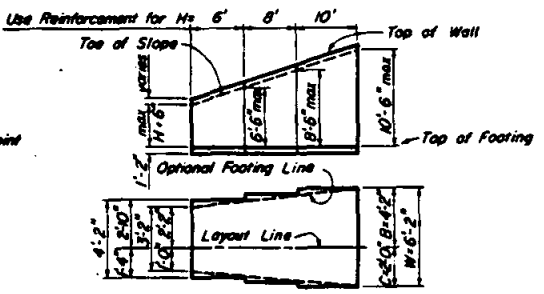

Note:
Bar cut-offs may be varied in increments of 6".

TYPICAL LAYOUT EXAMPLE

For joints required, see Details 3-3 and 3-4, drawing C-15.

RECOMMENDED BY THE SAN DIEGO REGIONAL STANDARDS COMMITTEE

Coordinator R.C.E. 19807 — Dec. 1975 Date

DRAWING NUMBER C-12

SAN DIEGO REGIONAL STANDARD DRAWING

REINFORCED CONCRETE RETAINING WALL TYPE 1A

Revision	By	Approved	Date

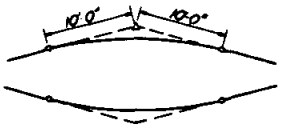

20' VC AT TOP OF WALL SLOPE CHANGE
WHERE SHOWN ON THE PLANS

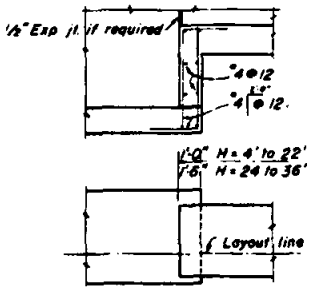

FOOTING STEP

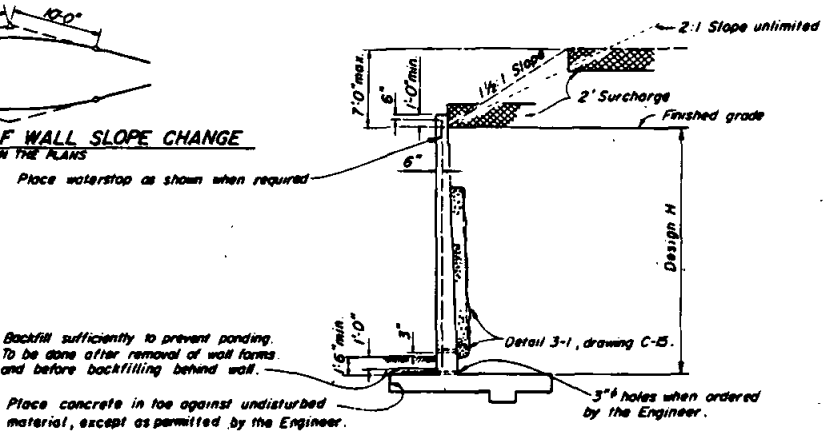

DESIGN AND DRAINAGE

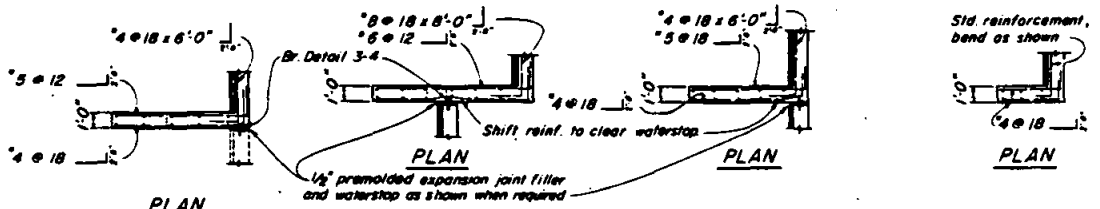

PLAN

PLAN

PLAN

PLAN

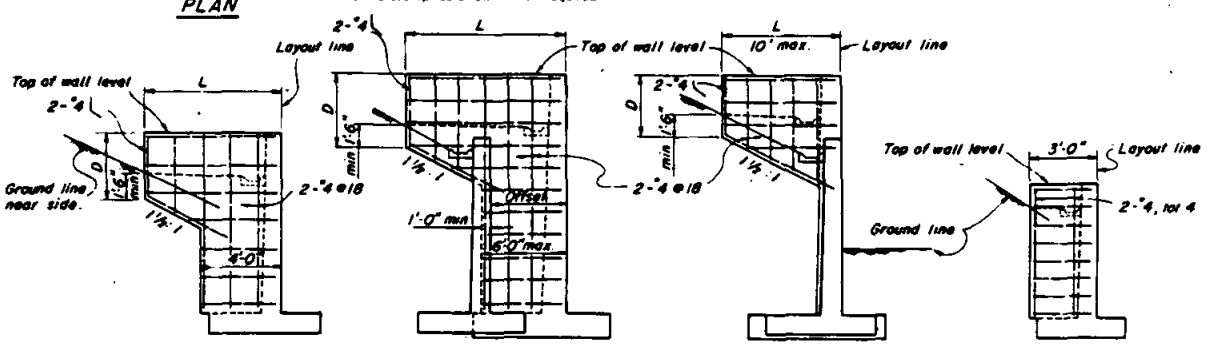

ELEVATION

RETURN WALL TYPE 'A'

Use where H = 8' or less

ELEVATION

RETURN WALL TYPE 'B'

Use where H = 10' or more on offset walls

ELEVATION

RETURN WALL TYPE 'C'

Use where H = 10' or more on straight walls

ELEVATION

RETURN WALL TYPE 'D'

Use where H = 6' or less

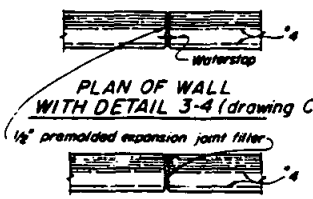

PLAN OF WALL WITH DETAIL 3-4 (drawing C-15)

PLAN OF WALL WITH EXPANSION JOINT ONLY

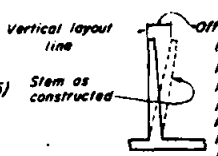

Offset as follows:

H 4 = 1/4" H 18 = 1 1/2"
H 6 = 3/8" H 20 = 1 3/4"
H 8 = 1/2" H 22 = 2"
H 10 = 5/8" H 24 = 2 1/4"
H 12 = 3/4" H 26 thru
H 14 = 1" H 36 = 2 1/2"
H 16 = 1 1/4"

APPROX. WALL OFFSET VALUES

Values for offsetting forms to be determined by the Engineer

NOTES:

Design Conditions

Design H may be exceeded by 6" before going to the next size.
Footing key is required except when found unnecessary by the Engineer.
Special footing design is required where foundation material is incapable of supporting toe pressure loads listed in table.
Return wall not required unless shown elsewhere.

Design Data:

f_c = 1300 psi f_c' = 3250 psi f_s = 24,000 psi n = 10 earth = 120 pcf
2' Surcharge:
Equivalent fluid pressure = 36 pcf max. for determination of toe pressure.
27 pcf min. for determination of heel pressure.

Earth pressures for 2:1 unlimited slope, 1 1/2:1 slope, and 1 1/2:1 unlimited slope, determined from Rankine's formula with ϕ = 33°-42'.

Revision	By	Approved	Date
Title	EC	M.B.	5-86

SAN DIEGO REGIONAL STANDARD DRAWING

REINFORCED CONCRETE RETAINING WALL DETAILS NO. 1

RECOMMENDED BY THE SAN DIEGO REGIONAL STANDARDS COMMITTEE

Coordinator R.C.E. 19807 — Dec. 1975 Date

DRAWING NUMBER C-13

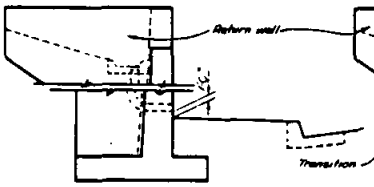

RETAINING WALL
FACE OF WALL OUTLET

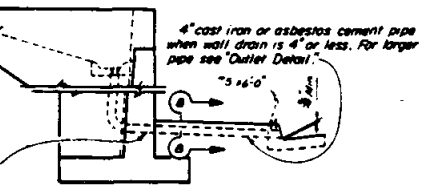

RETAINING WALL
GUTTER OUTLET

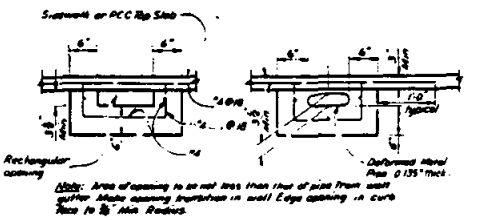

OUTLET DETAIL–SECTION B-B

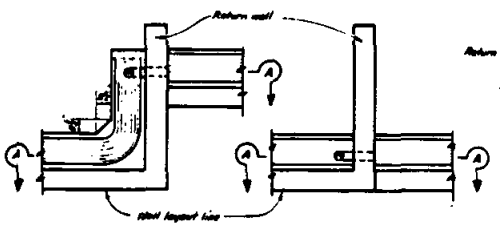

PLAN
OFFSET WALL

PLAN
CONTINUOUS WALL

DRAIN THROUGH RETURN WALL

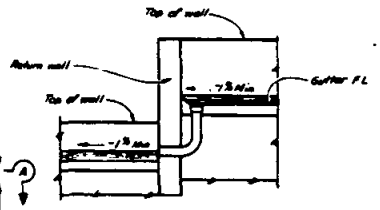

SECTION A–A

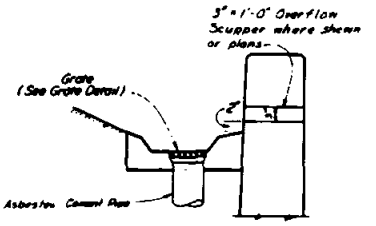

WALL DRAIN DETAIL

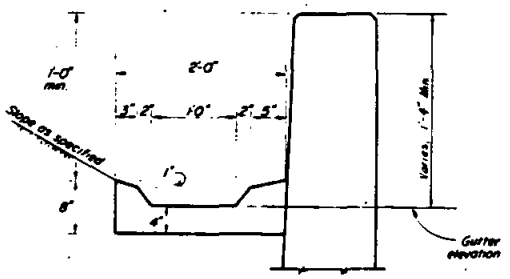

TYPICAL GUTTER DETAIL

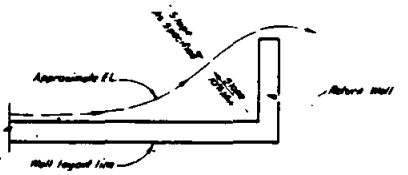

WALL DRAINAGE
WHERE GUTTER NOT REQUIRED

GRATE DETAIL
Sizes to fit Standard Hubs

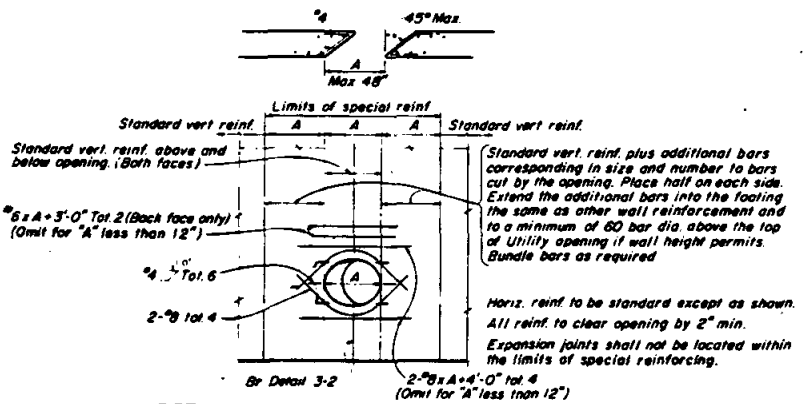

RETAINING WALL–UTILITY OPENING
To be used in conjunction with the " Retaining Wall Type 1" sheet.
Max. size of Opening (A)=48"

RECOMMENDED BY THE SAN DIEGO REGIONAL STANDARDS COMMITTEE Coordinator R.C.E. 19807 — Dec. 1975 Date	SAN DIEGO REGIONAL STANDARD DRAWING	Revision	By	Approved	Date
		Title	SC	M.B.	5-86
DRAWING NUMBER C-14	REINFORCED CONCRETE RETAINING WALL DETAILS NO. 2				

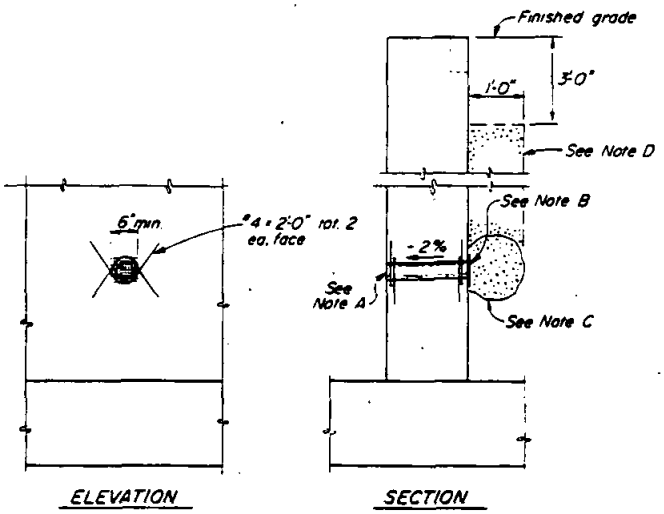

WEEP HOLE AND PERVIOUS BACKFILL

DETAIL 3-1

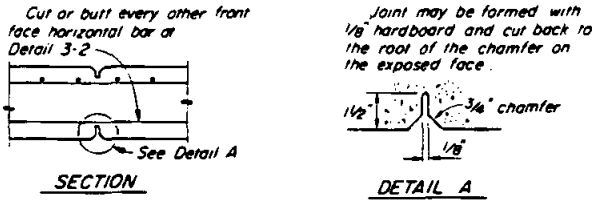

WEAKENED PLANES

DETAIL 3-2

Notes:

A. 4"ϕ drains @ 25' max. center to center (9' c-c for Type 3 and 9'-3" c c for Type 4 Retaining Walls) For walls adjacent to sidewalks or curbs, provide 4" cast iron or asbestos cement pipe under the sidewalk to discharge thru curb face. Exposed wall drains shall be located 3"± above finished grade.

B. 6" square aluminum or galvanized steel wire 4 mesh hardware cloth (Min wire diameter 0.03") Anchor firmly to backface.

C. One cubic foot pervious backfill material in a burlap sack, securely tied.

D. Pervious backfill material continuous behind retaining wall.

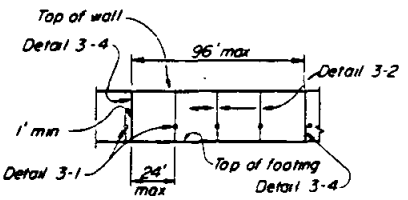

WALL EXPANSION JOINTS AND WEAKENED PLANES

DETAIL 3-3

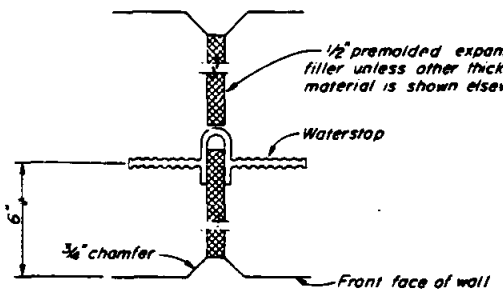

WALL EXPANSION JOINT

DETAIL 3-4

Waterstop to have 5 or more pairs of raised ribs to provide 0.1 sq. in. min. rib cross-section area on each half of the waterstop. Height of ribs to be 3/32" min.

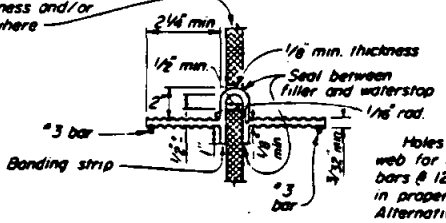

Holes will be permitted in the outer 1/2" of the web for wire, rings, etc.. Tie web to #3 reinforcing bars @ 12" max. intervals to support the waterstop in proper position during concrete placement. Alternative detail may be submitted for approval of the Engineer.

WATERSTOP

DETAIL 3-6

Revision	By	Approved	Date
Title		M.B.	5-86

SAN DIEGO REGIONAL STANDARD DRAWING

REINFORCED CONCRETE RETAINING WALL DETAILS NO. 3

RECOMMENDED BY THE SAN DIEGO REGIONAL STANDARDS COMMITTEE

Coordinator R.C.E. 19807 — Dec. 1975 Date

DRAWING NUMBER C-15

DRAINAGE SYSTEMS

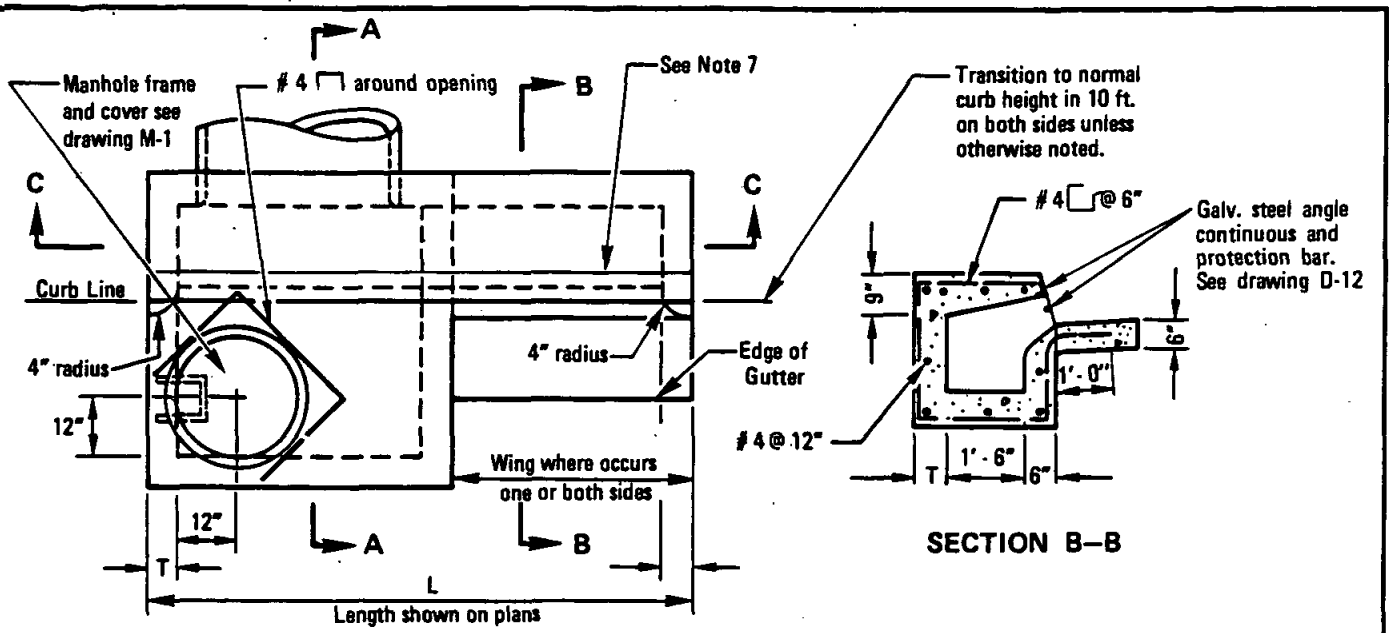

PLAN

SECTION B–B

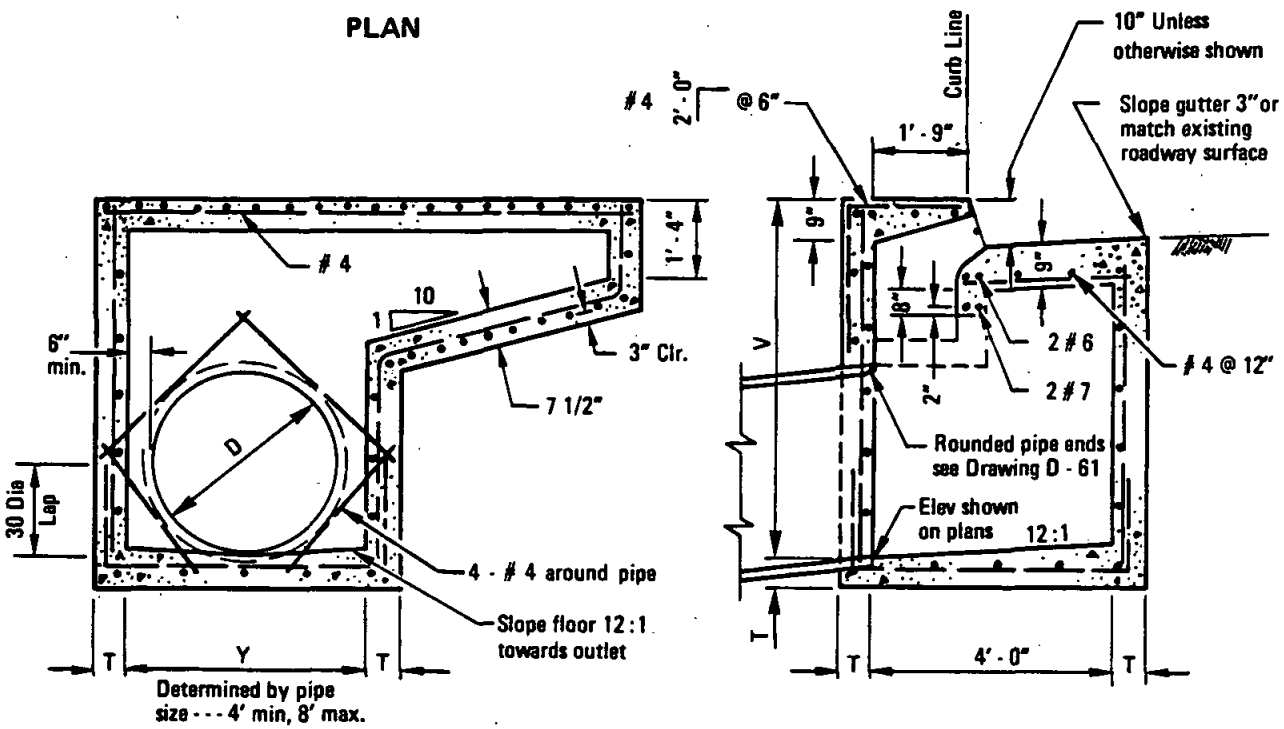

SECTION C–C

SECTION A–A

NOTES:

1. See Standard Drawings D-11 & D-12 for additional notes and details.
2. Types are designated as follows: (no wing) A, (one wing) A-1, (two wings) A-2.
3. Exposed edges of concrete shall be rounded with a radius of 1/2".
4. When V exceeds 4' steps shall be installed. See Standard Drawing D-11 for details.
5. Concrete gutter to match adjacent gutters.
6. An expansion joint shall be placed at the ends of the inlet where the curb is to adjoin.
7. Provide 1/4" tooled groove in top slab in line with back of adjacent curb.
8. Surface of top slab shall be sidewalk finished to drain toward street at a slope of 1/4" per foot.
9. Maintain 1 1/2" clear spacing between reinforcing and surface unless otherwise noted.

LEGEND ON PLANS

15' Type A-1 inlet

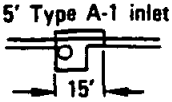

Revision	By	Approved	Date
Reference	TRD	M.B.	10-82
Rebar		M.B.	5-86

SAN DIEGO REGIONAL STANDARD DRAWING

CURB INLET - TYPE A

RECOMMENDED BY THE SAN DIEGO REGIONAL STANDARDS COMMITTEE

Allan A. Kershaw — Dec. 1975

Coordinator R.C.E. 19807 — Date

DRAWING NUMBER **D-1**

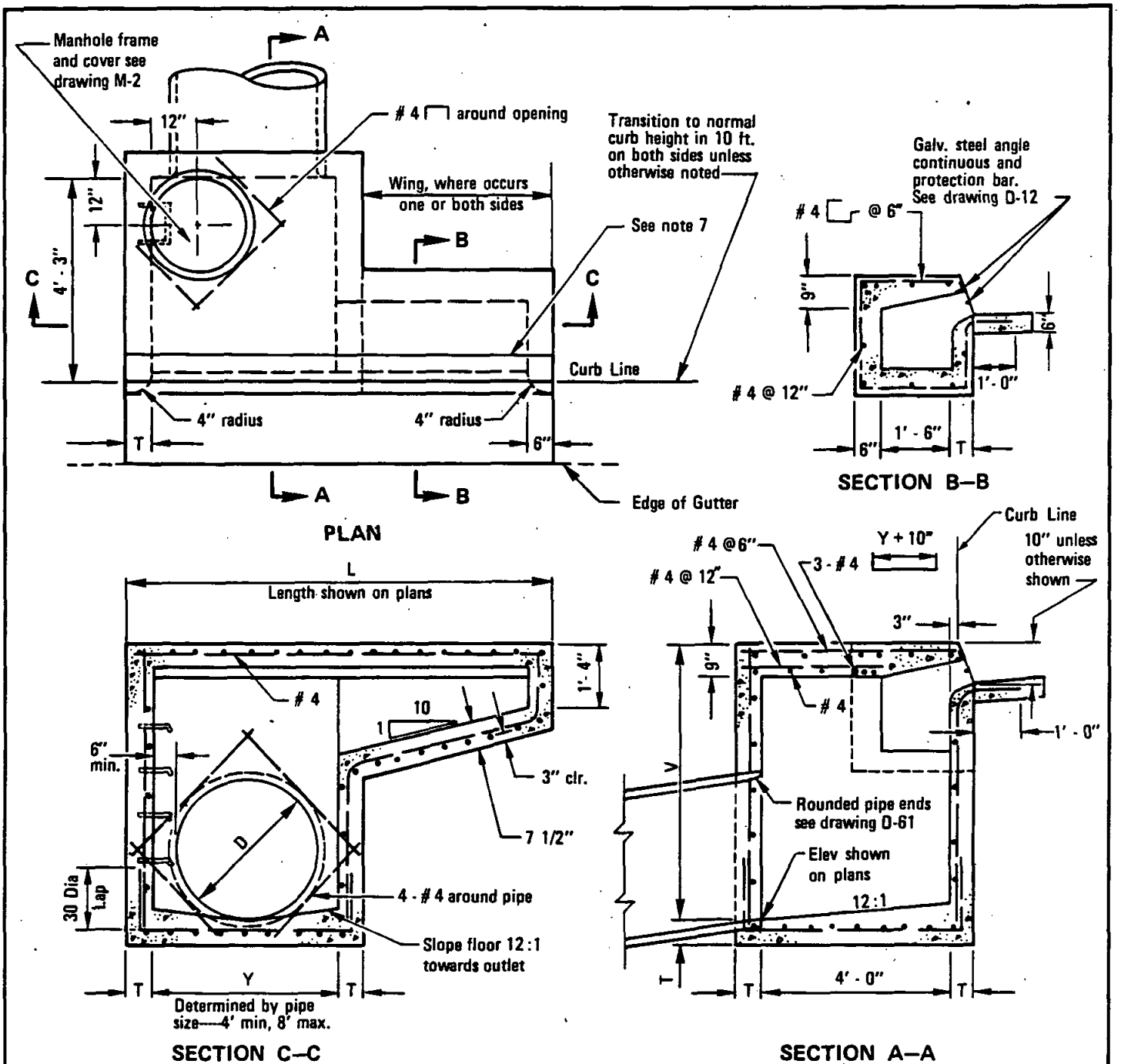

NOTES:

1. See Standard Drawings D-11 & D-12 for additional notes and details.
2. Types are designated as follows: (no wing) B, (one wing) B-1, (two wings) B-2.
3. Exposed edges of concrete shall be rounded with a radius of 1/2".
4. When V exceeds 4' steps shall be installed. See Standard Drawing D-11 for details.
5. Concrete gutter to match adjacent gutters.
6. An expansion joint shall be placed at the ends of the inlet where the curb is to adjoin.
7. Provide 1/4" tooled groove in top slab in line with back of adjacent curb.
8. Surface of top slab shall be sidewalk finished to drain toward street at a slope of 1/4" per foot.
9. Maintain 1 1/2" clear spacing between reinforcing and surface unless otherwise noted.

LEGEND ON PLANS

15' Type B-1 inlet

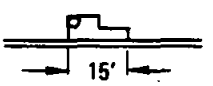

RECOMMENDED BY THE SAN DIEGO REGIONAL STANDARDS COMMITTEE

Coordinator R.C.E. 19807 — Dec. 1975 Date

DRAWING NUMBER **D-2**

SAN DIEGO REGIONAL STANDARD DRAWING

CURB INLET - TYPE B

Revision	By	Approved	Date
Notes		D.S.	7-79
Reference		M.B.	10-82
Rebar		M.B.	5-86
Dash line		A.H.	7-88

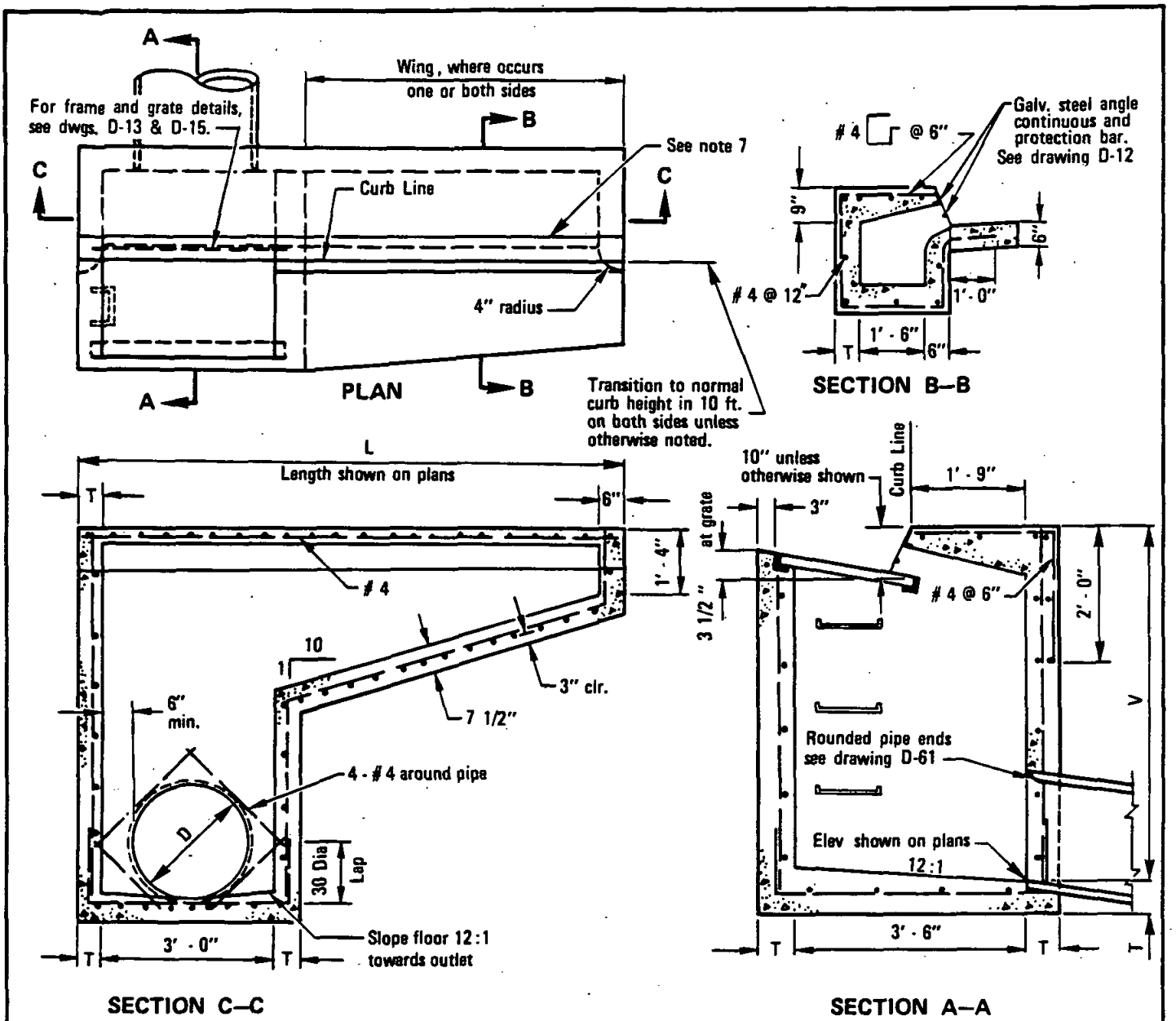

NOTES:

1. See Standard Drawings D-11 through D-15 for additional notes and details.
2. Types are designated as follows: (no wing) C, (one wing) C-1, (two wings) C-2.
3. Exposed edges of concrete shall be rounded with a radius of 1/2".
4. When V exceeds 4 ft. steps shall be installed. See Standard Drawing D-11 for details.
5. Concrete gutter to match adjacent gutters.
6. An expansion joint shall be placed at the ends of the inlet where the curb is to adjoin.
7. Provide 1/4" tooled groove in top slab in line with back of adjacent curb.
8. Surface of top slab shall be sidewalk finished to drain toward street at a slope of 1/4" per foot.
9. Maintain 1 1/2" clear spacing between reinforcing and surface unless otherwise noted.
10. Where inlet is to be constructed on grade and Standard Drawing D-20 concrete apron is required, lift down-grade end of grate as shown on D-20.

LEGEND ON PLANS

15' Type C-1 Inlet

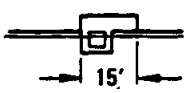

Revision	By	Approved	Date
Notes		D.S.	7-79
Reference	TRP	M.B.	10-82
Note 11		M.B.	5-86

SAN DIEGO REGIONAL STANDARD DRAWING

CURB INLET - TYPE C

RECOMMENDED BY THE SAN DIEGO REGIONAL STANDARDS COMMITTEE

Coordinator R.C.E. 19807 — Dec. 1975 Date

DRAWING NUMBER D-3

DIMENSIONS

T = 8" if V is less than 8'.
T = 10" if V is 8' or more.
V = 5' unless otherwise specified.
V = D + 32" minimum.
W = 7' unless otherwise specified.
Y = 5' unless otherwise specified.
Width of driveway, W, shall be 10' unless otherwise specified.
Elevation of point N shall be 13" below point H unless otherwise specified.

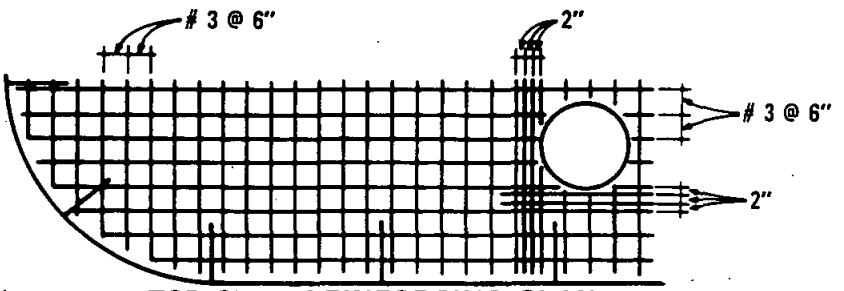

TOP SLAB REINFORCING PLAN

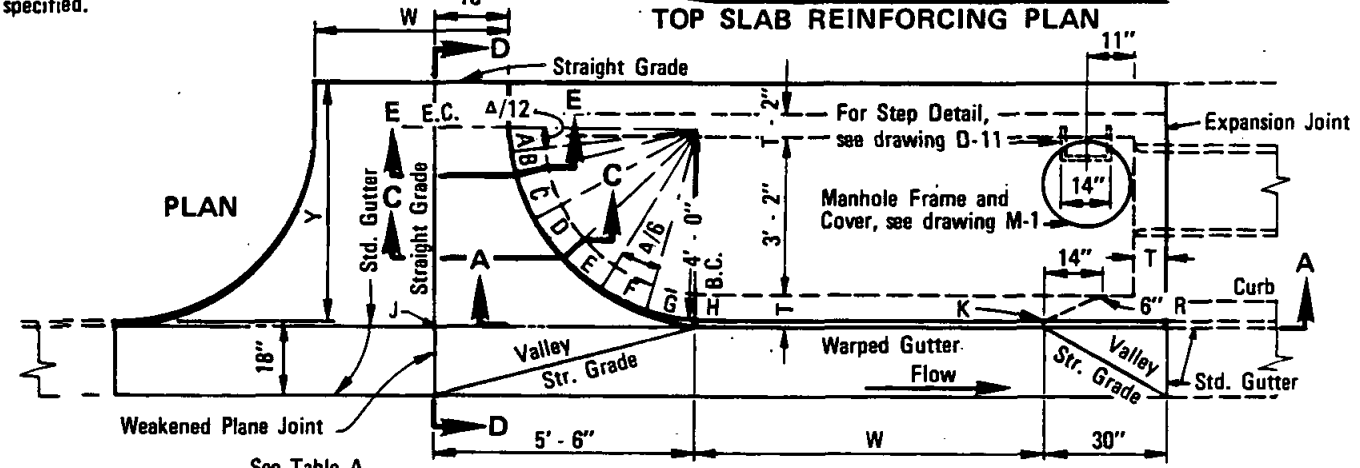

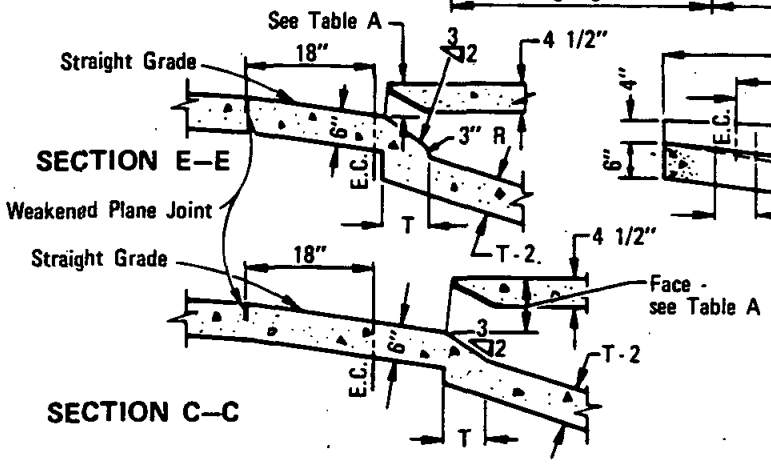

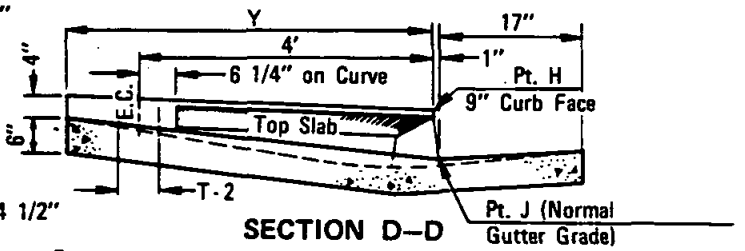

PT	A	B	C	D	E	F	G	H	K	M
F.C.	4½"	5¼"	6"	7½"	9"	9"	9"	9"	9"	8"

TABLE A

NOTES

1. Steel Plate should be of one continuous piece with curve portion a circular arc. Length = Width + 18" + circular arc.
2. # 4 rebar 30" long, 1' O.C. shall be installed in top of walls for ties to top and gutters.
3. The reinforcing steel in the top slab shall be # 3 bars 6" O.C. unless otherwise specified. Clearance shall be 1 1/2" from the bottom of the slab.
4. Concrete for the inlet too to be placed at the same time as the s/w curb and gutter.
5. Concrete shall be 560-C-3250
6. Exposed edges of concrete shall be rounded with a radius of 1/2".
7. Surface of top slab shall be sidewalk finished to drain toward street at a slope of 1/4" per foot.

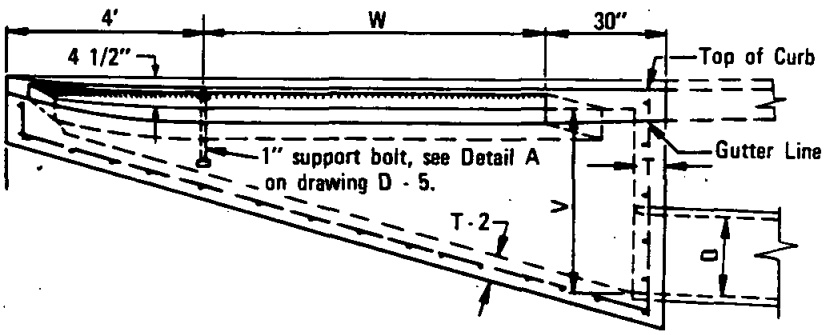

SECTION A–A

RECOMMENDED BY THE SAN DIEGO REGIONAL STANDARDS COMMITTEE	SAN DIEGO REGIONAL STANDARD DRAWING	Revision	By	Approved	Date
Allan A. Kershaw Dec. 1975 Coordinator R.C.E. 19807 Date		Conc.		M.B.	5-86
DRAWING NUMBER D-4	CURB INLET - TYPE D				

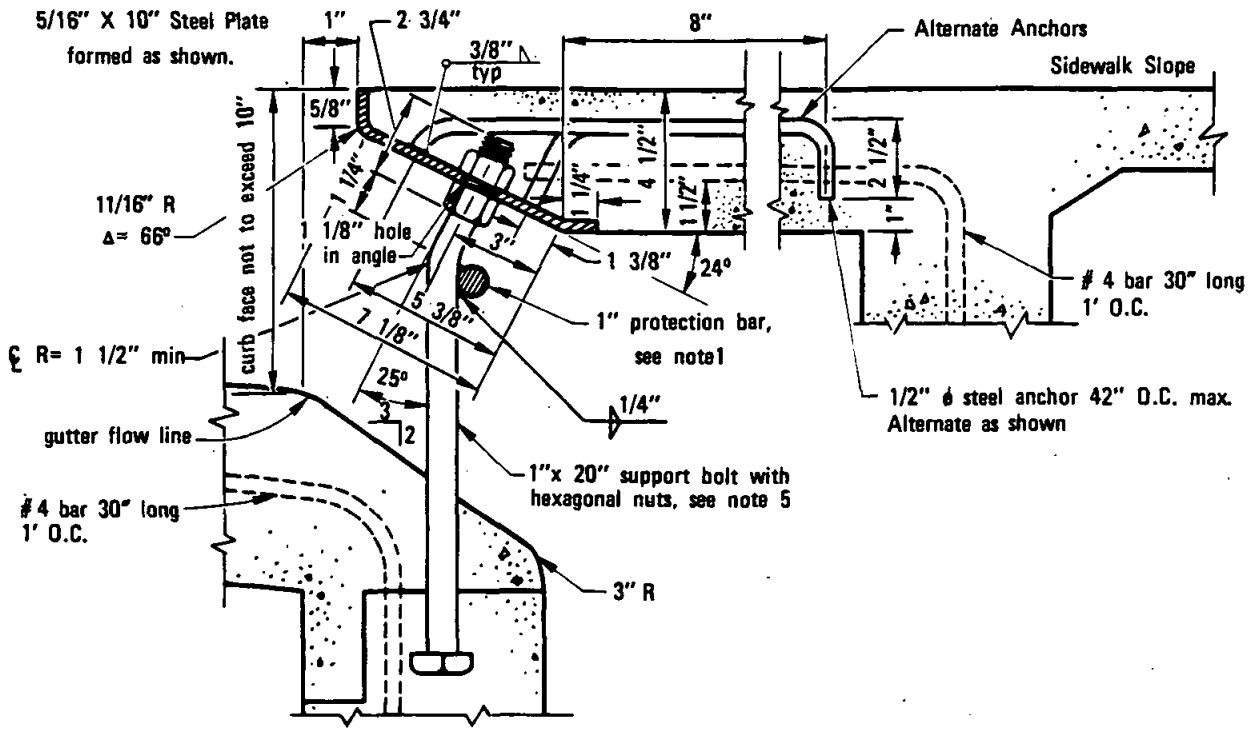

DETAIL–A

NOTES

1. A plain, round steel protection bar 1" in dia. shall be installed. Bar shall be embedded 5" at each end.
2. Leave 8" hole blocked out in bottom placing of concrete for bolts placed at same time as gutter.
3. All exposed metal parts shall be galvanized.
4. All galvanizing damaged by welding shall receive two coats of aluminum paint.
5. Support bolts shall be spaced at not more than 5' - 0" O.C.
6. Adjusting nuts to be tightened and secured in place when steel plate is in proper position.

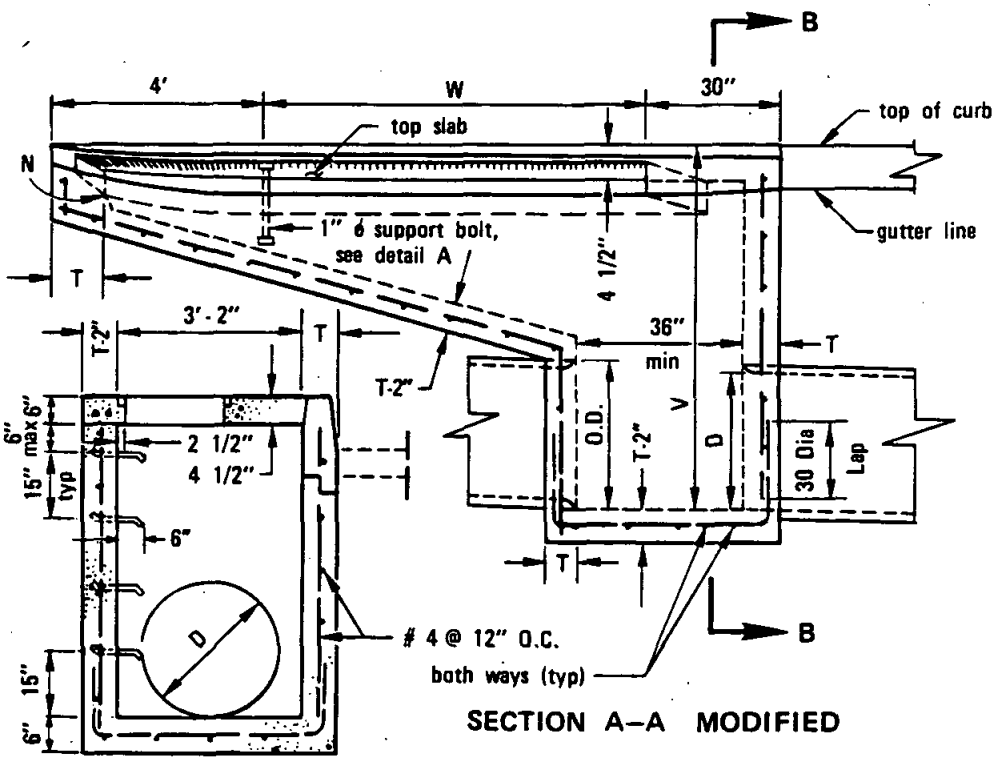

SECTION A–A MODIFIED

SECTION B–B

Revision	By	Approved	Date
Rebar	TKP	M.B.	10-82
Lap	SC	M.B.	5-86

SAN DIEGO REGIONAL STANDARD DRAWING

CURB INLET - TYPE D (DETAILS)

RECOMMENDED BY THE SAN DIEGO REGIONAL STANDARDS COMMITTEE

Allan A. Kershaw — Dec. 1975

Coordinator R.C.E. 19807 — Date

DRAWING NUMBER D-5

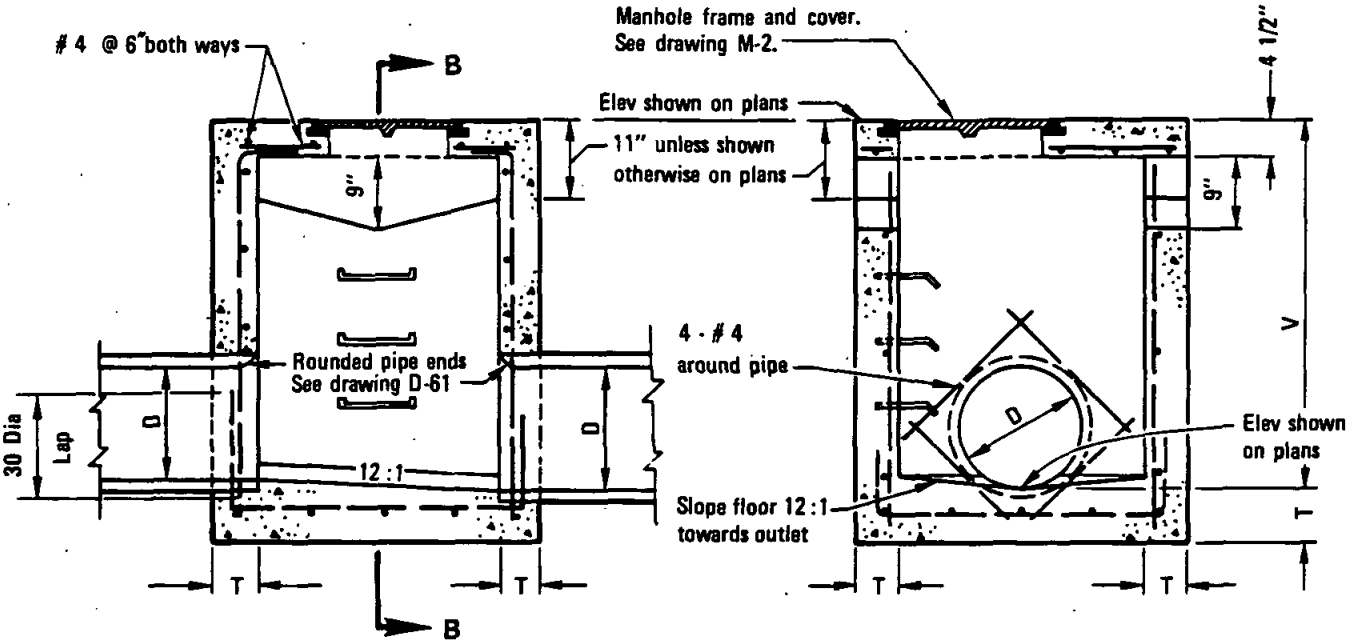

SECTION A–A

SECTION B–B

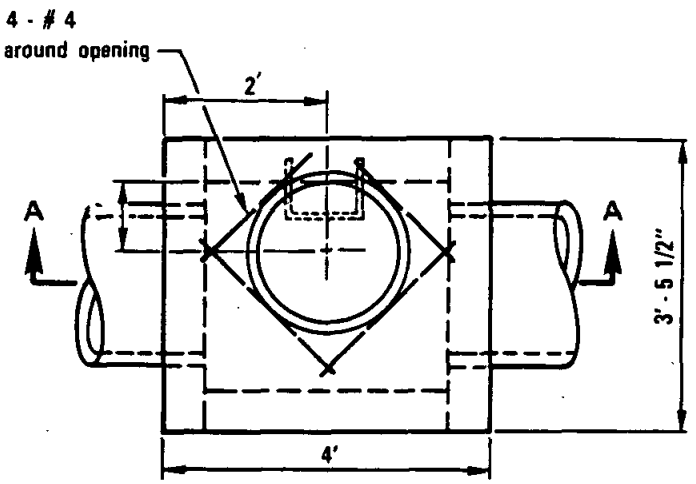

PLAN

NOTES

1. See Standard Drawing D-11 for additional notes and details.
2. When V exceeds 4' steps shall be installed. See Standard Drawing D-11 for details.
3. Exposed edges of concrete shall be rounded with a radius of 1/2".
4. Openings on both sides unless otherwise shown on plans.
5. Maintain 1 1/2" clear spacing between reinforcing and surface.

LEGEND ON PLANS

Revision	By	Approved	Date
Rebar	TKF	M.B.	10-82
Lap	[illegible]	M.B.	5-86

SAN DIEGO REGIONAL STANDARD DRAWING

CATCH BASIN - TYPE F

RECOMMENDED BY THE SAN DIEGO REGIONAL STANDARDS COMMITTEE

Coordinator R.C.E. 19807 — Dec. 1975 Date

DRAWING NUMBER D-7

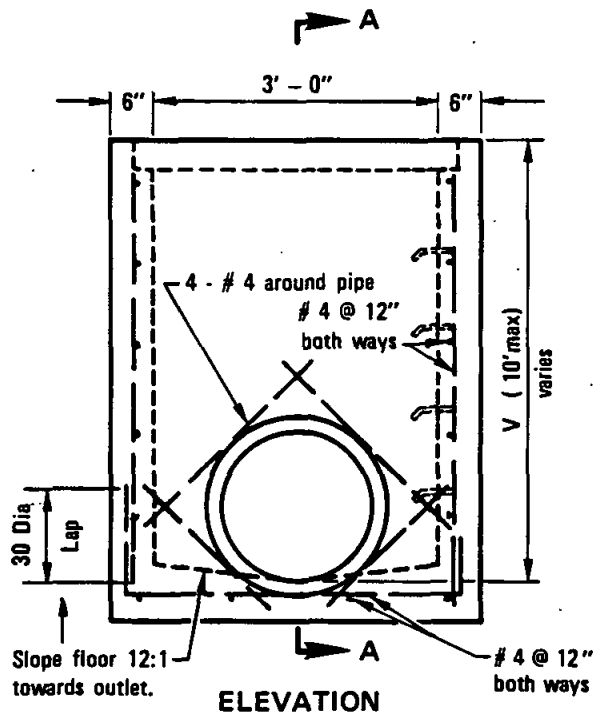

ELEVATION

NOTES

1. See Standard Drawing D-11 for additional notes and details.
2. When V exceeds 4', steps shall be installed. See Standard Drawing D-11 for details.
3. Maintain 1 1/2" clear spacing between reinforcing and surface.
4. Increase in allowable depth subject to approval by Agency.
5. Section A–A shows 3 sizes and shall not imply that an interior wall is to be built for the structures with double or triple frame and grate.
6. Exposed edges of concrete shall be rounded with a radius of 1/2".
7. Designate types as follows: Single G-1, Double G-2 and Triple G-3.
8. Only end bearing grates shall be used. See Std. Drawing D-15.

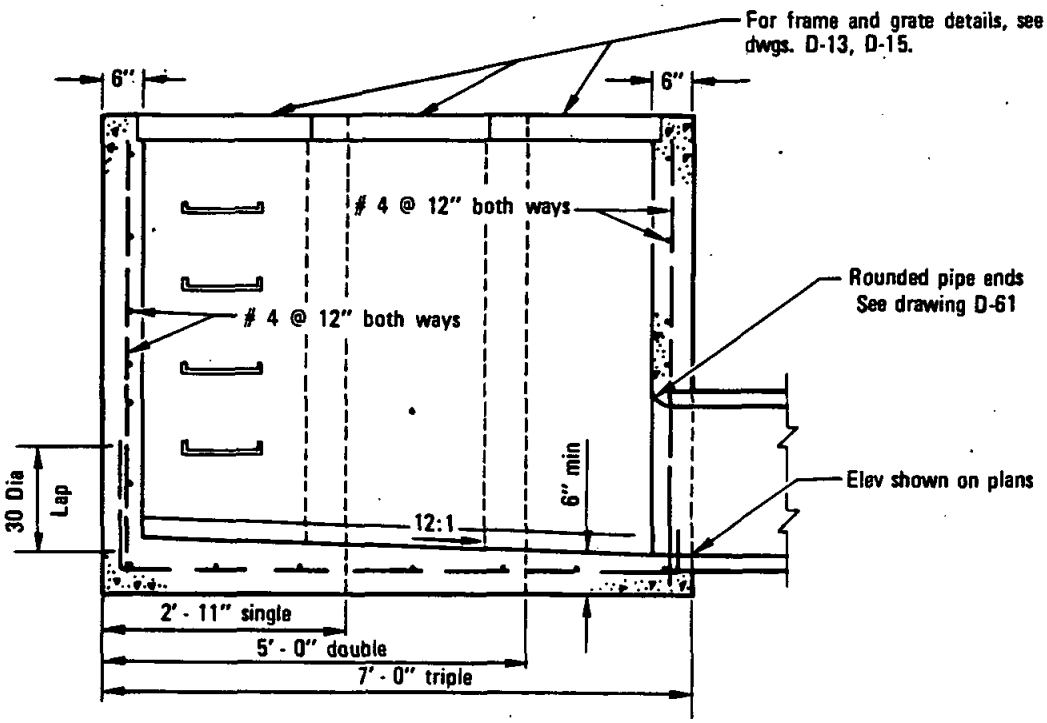

SECTION A–A

LEGEND ON PLANS

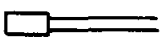

RECOMMENDED BY THE SAN DIEGO REGIONAL STANDARDS COMMITTEE Coordinator R.C.E. 19807 Date Dec. 1975	SAN DIEGO REGIONAL STANDARD DRAWING	Revision	By	Approved	Date
		Reference	TRP	M.B.	10-82
		Lap		M.B.	5-86
DRAWING NUMBER D-8	CATCH BASIN - TYPE G				

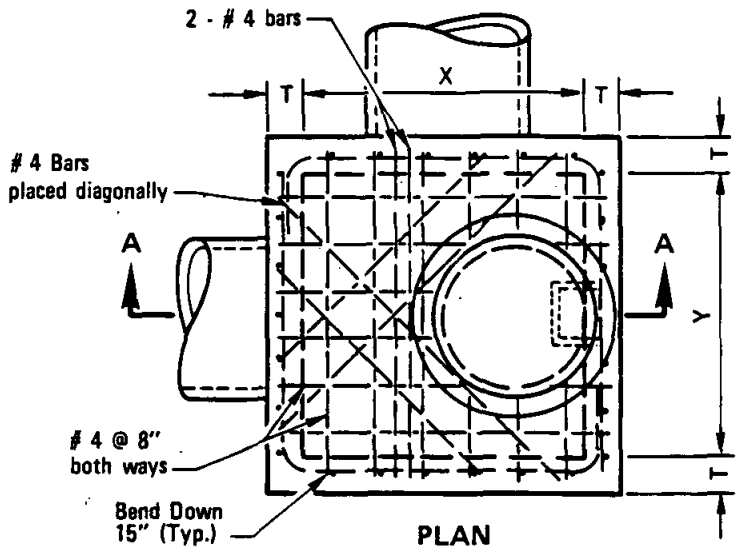

PLAN

TYPE	PIPE DIA	X	Y	Z
A 4	up to 39"	4'	4'	6'
A 5	42" to 48"	5'	4'	6'
A 6	51" to 60"	6'	4'	6'
A 7	63" to 72"	7'	4'	7'
A 8	75" to 84"	8'	4'	8'

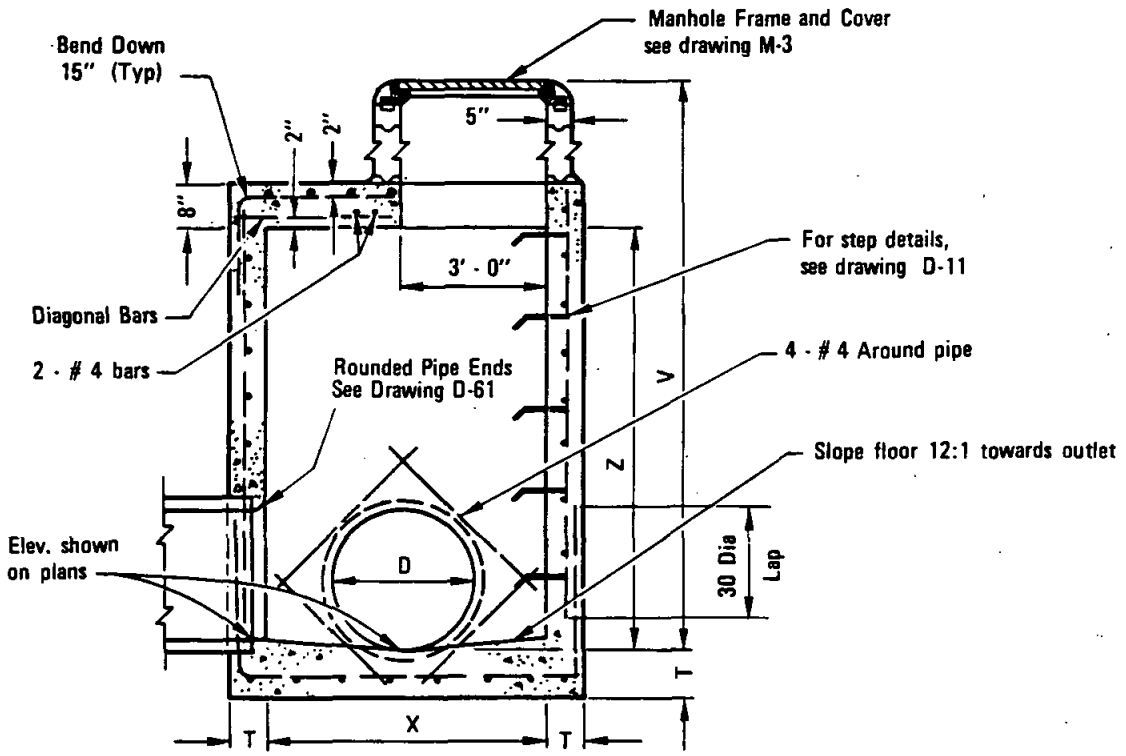

SECTION A–A

NOTES

1. See Standard Drawing D-11 for additional notes and details.
2. Concrete base shall be 560-C-3250
3. All precast components shall be reinforced with 1/4" diameter steel, wound spirally on 4" centers.
4. All joints shall be set in Class C mortar.
5. Maintain 1 1/2" clear spacing between reinforcing and surface unless otherwise noted.
6. Exposed edges of concrete shall be rounded with a radius of 1/2".

LEGEND ON PLANS

Revision	By	Approved	Date
Lap	[illegible]	[illegible]	5-86

SAN DIEGO REGIONAL STANDARD DRAWING

STORM DRAIN CLEANOUT - TYPE A

RECOMMENDED BY THE SAN DIEGO REGIONAL STANDARDS COMMITTEE

[signature] Dec. 1975
Coordinator R.C.E. 19807 Date

DRAWING NUMBER D-9

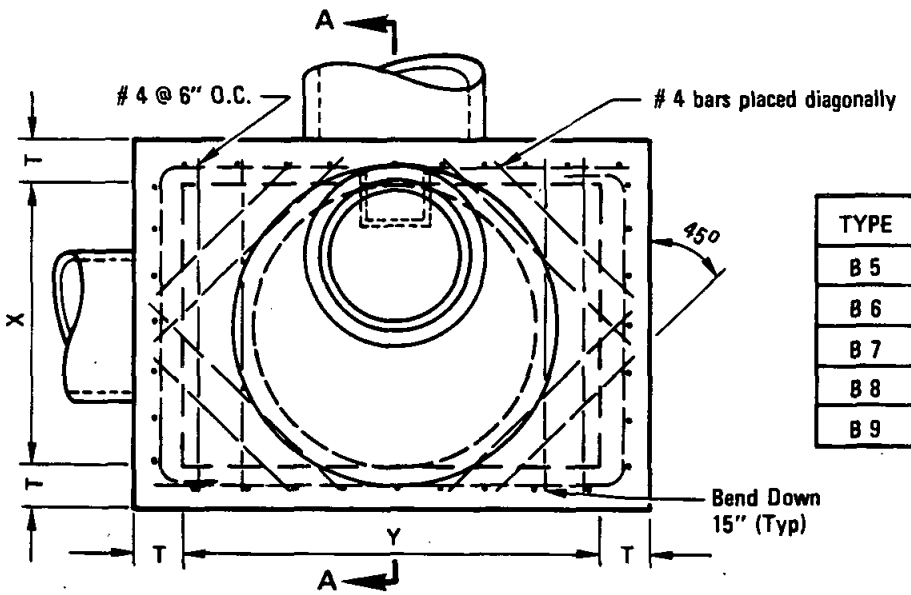

PLAN

TYPE	PIPE DIA	X	Y	Z
B 5	up to 51"	4'	5'	5'
B 6	54" to 60"	4'	6'	6'
B 7	63" to 69"	4'	7'	7'
B 8	72" to 81"	4'	8'	8'
B 9	84" to 90"	4'	9'	9'

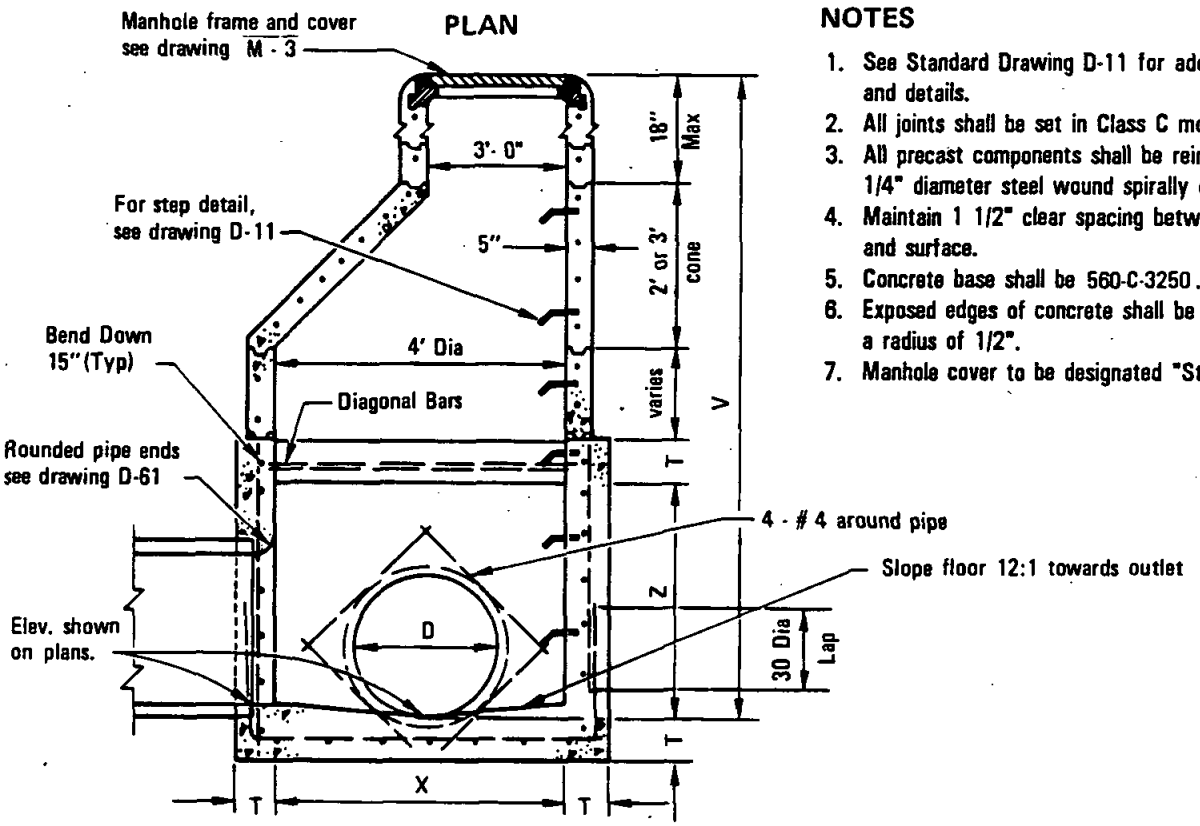

SECTION A–A

NOTES

1. See Standard Drawing D-11 for additional notes and details.
2. All joints shall be set in Class C mortar.
3. All precast components shall be reinforced with 1/4" diameter steel wound spirally on 4" centers.
4. Maintain 1 1/2" clear spacing between reinforcing and surface.
5. Concrete base shall be 560-C-3250.
6. Exposed edges of concrete shall be rounded with a radius of 1/2".
7. Manhole cover to be designated "Storm Drain".

LEGEND ON PLANS

RECOMMENDED BY THE SAN DIEGO REGIONAL STANDARDS COMMITTEE

Coordinator R.C.E. 19807 — Date Dec. 1975

DRAWING NUMBER **D-10**

SAN DIEGO REGIONAL STANDARD DRAWING

STORM DRAIN CLEANOUT - TYPE B

Revision	By	Approved	Date
Lap			5-86
Note 7			5-92

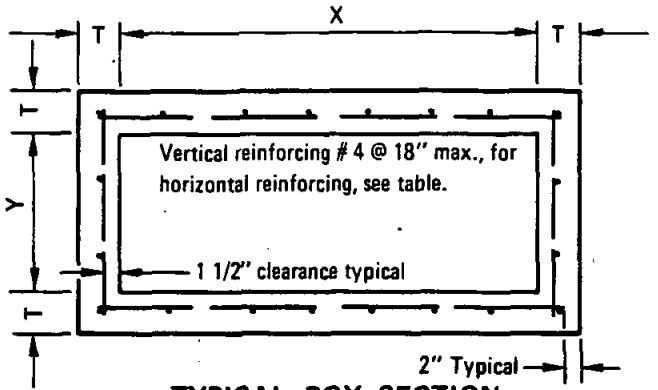

TYPICAL BOX SECTION

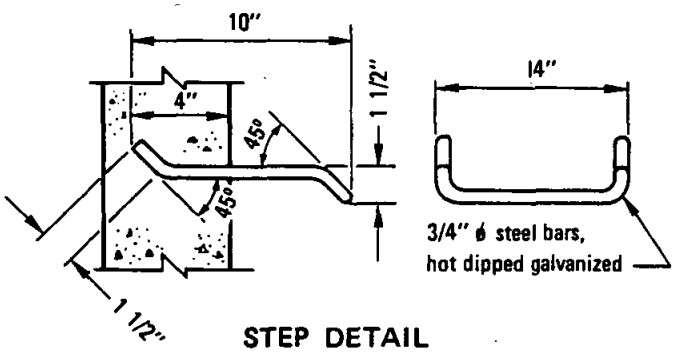

STEP DETAIL

BOX SECTION REINFORCEMENT			
MAXIMUM SPAN X or Y	DEPTH V	THICK-NESS T	HOR. & FLR. REINF.
3' - 0" to 4' - 0"	4' - 0"	6"	# 4 @ 18"
4' - 1" to 7' - 0"		6"	# 4 @ 12"
7' - 1" to 8' - 0"		6"	# 4 @ 8"
3' - 0" to 4' - 0"	4' - 1" to 8' - 0"	6"	# 4 @ 18"
4' - 1" to 5' - 0"		6"	# 4 @ 12"
5' - 1" to 6' - 0"		6"	# 4 @ 8"
6' - 1" to 8' - 0"		6"	# 4 @ 6"
3' - 0" to 4' - 0"	8' - 1" to 12' - 0"	6"	# 4 @ 15"
4' - 1" to 5' - 0"		8"	# 4 @ 12"
5' - 1" to 6' - 0"		8"	# 4 @ 8"
6' - 1" to 8' - 0"		8"	# 4 @ 6"
3' - 0" to 4' - 0"	12' - 1" to 16' - 0"	6"	# 4 @ 12"
4' - 1" to 5' - 0"		8"	# 4 @ 12"
5' - 1" to 6' - 0"		8"	# 4 @ 8"
6' - 1" to 7' - 0"		8"	# 4 @ 6"
7' - 1" to 8' - 0"		8"	# 5 @ 8"
3' - 0" to 4' - 0"	16' - 1" to 20' - 0"	8"	# 4 @ 12"
4' - 1" to 5' - 0"		10"	# 4 @ 12"
5' - 1" to 6' - 0"		10"	# 4 @ 8"
6' - 1" to 7' - 0"		10"	# 4 @ 6"
7' - 1" to 8' - 0"		10"	# 5 @ 8"
3' - 0" to 4' - 0"	20' - 1" to 24' - 0"	8"	# 4 @ 12"
4' - 1" to 5' - 0"		10"	# 4 @ 12"
5' - 1" to 6' - 0"		10"	# 4 @ 8"
6' - 1" to 7' - 0"		10"	# 4 @ 6"
7' - 1" to 8' - 0"		12"	# 5 @ 8"

NOTES

1. Concrete shall be 560-C-3250 unless otherwise noted.
2. Reinforcing steel shall comply with this drawing unless otherwise specified.
3. Reinforcing steel shall be intermediate grade deformed bars conforming to latest ASTM specifications.
4. Bends shall be in accordance with latest ACI code.
5. Minimum splice length for reinforcing shall be 30 diameters.
6. Floor shall have a wood trowel finish and, except where used as junction boxes, shall have a minimum slope of 1" per foot toward the outlet.
7. Depth V is measured from the top of the structure to the flowline of the box.
8. Wall thickness and reinforcing steel required may be decreased in accordance with table above.
9. Wall thickness shall be stepped on the outside of the box.
10. When the structure depth V exceeds 4', steps shall be cast into the wall at 15 inch intervals from 15" above floor to within 12 inches of top of structure. Where possible place steps in wall without pipe opening, otherwise over opening of smallest diameter.
11. Alternate step may be an approved steel reinforced polypropylene step.

Revision	By	Approved	Date
Notes	JC	D. S.	7-79
Conc.	JC	M.B.	5-86

SAN DIEGO REGIONAL STANDARD DRAWING

INLETS AND CLEANOUTS NOTES AND DETAILS

RECOMMENDED BY THE SAN DIEGO REGIONAL STANDARDS COMMITTEE

Coordinator R.C.E. 19807 — Dec. 1975 Date

DRAWING NUMBER D-11

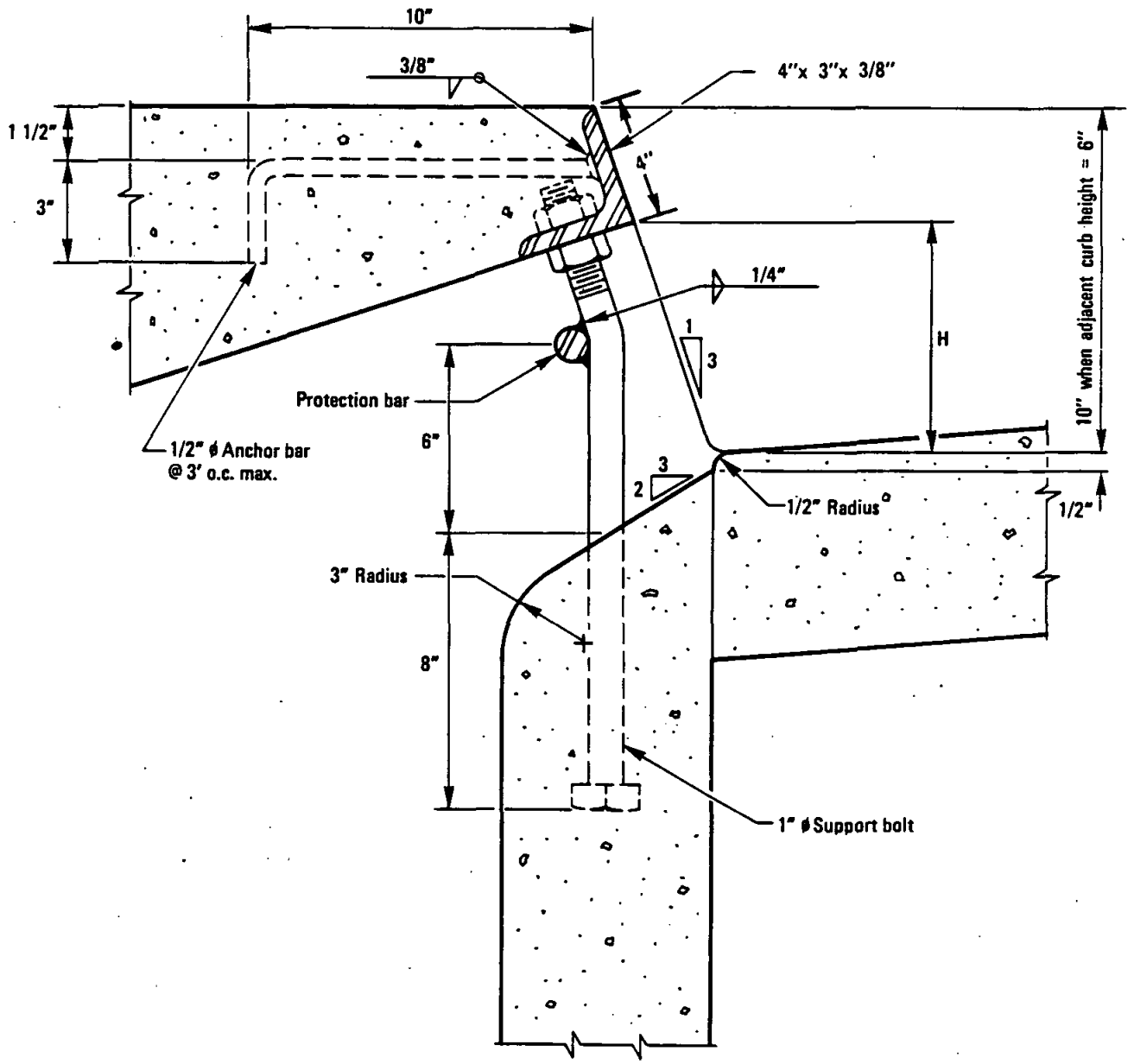

NOTES:

1. Face angle shall be cast into structure continuous for the full length "L".
2. All exposed metal parts to be hot-dipped galvanized after fabrication.
3. When curb inlet opening height (H) exceeds 6" install 1" ϕ steel protection bar.
4. Install additional bars at 3 1/2" clear spacing above first bar when opening exceeds 13".
5. When curb inlet opening length exceeds 8' install 1" ϕ steel support bolts, spaced at not more than 5' o.c.

RECOMMENDED BY THE SAN DIEGO REGIONAL STANDARDS COMMITTEE

Allan A. Kershaw — Dec. 1975
Coordinator R.C.E. 19807 — Date

DRAWING NUMBER D-12

SAN DIEGO REGIONAL STANDARD DRAWING

CURB INLET OPENING

Revision	By	Approved	Date
Angle	JC	D.S.	7-79
Note 3	TRP	M.B.	10-82
Angle	TRP	M.B.	10-82

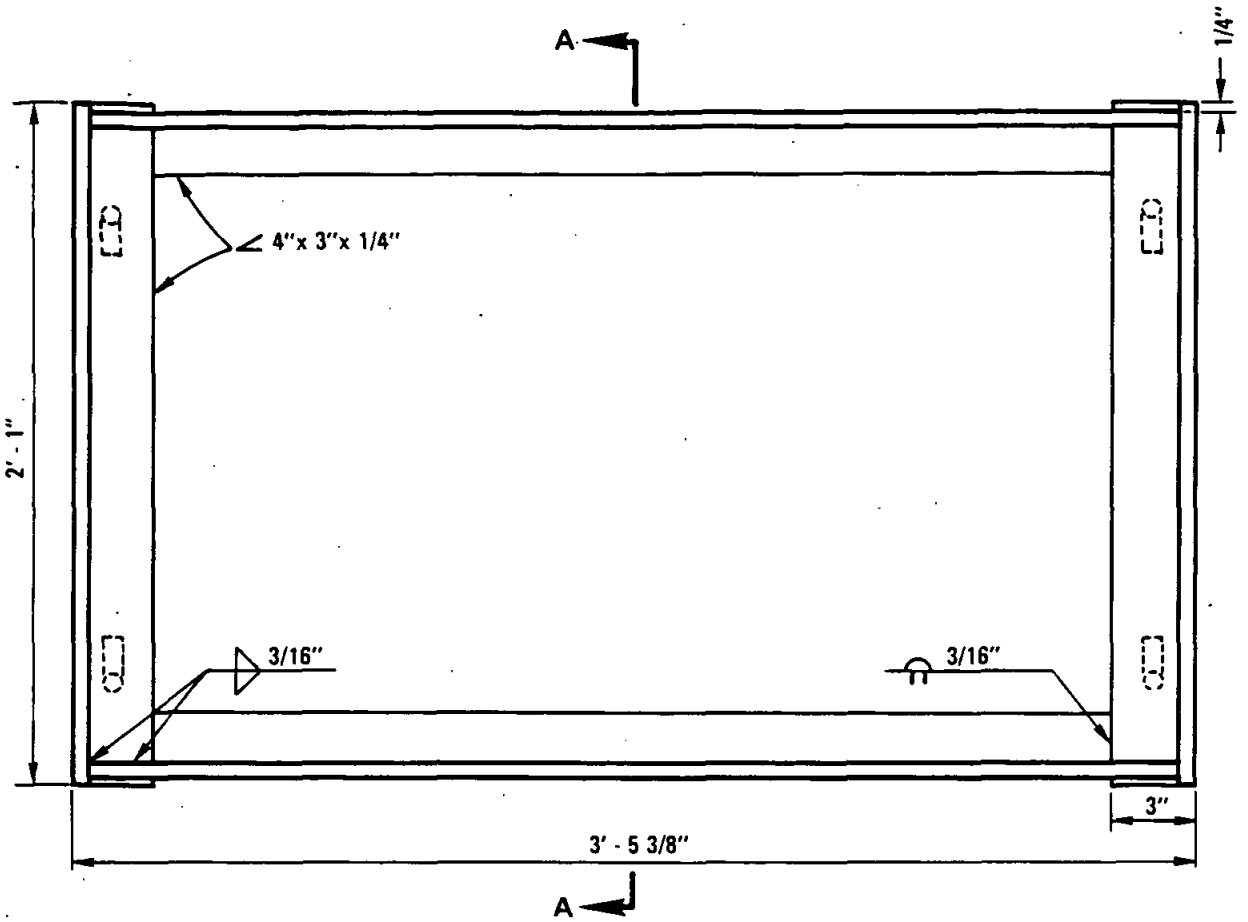

PLAN

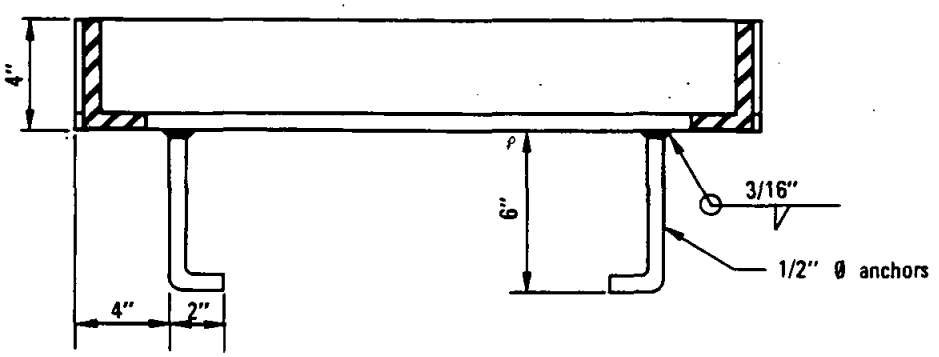

SECTION A–A

NOTES

1. Hot dip galvanize all parts after fabrication.

Revision	By	Approved	Date
Note 1	SC	M.B.	5-86

SAN DIEGO REGIONAL STANDARD DRAWING

WELDED STEEL GRATE FRAME

RECOMMENDED BY THE SAN DIEGO REGIONAL STANDARDS COMMITTEE

Allan A. Kershaw — Dec. 1975

Coordinator R.C.E. 19807 — Date

DRAWING NUMBER **D-13**

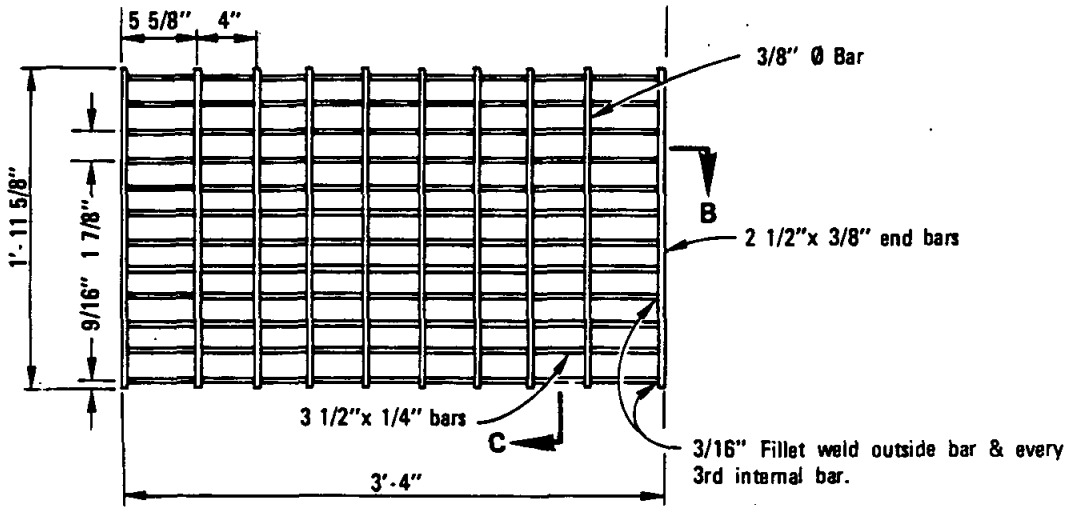

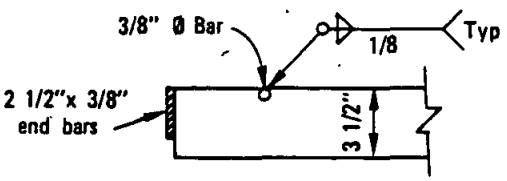

SECTION B

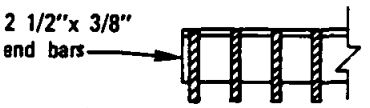

SECTION C

NOTES:

1. Hot dip galvanize all parts after fabrication.
2. Dimensions to Centerline of bars unless otherwise noted.
3. Weight: 141 lbs.

Revision	By	Approved	Date
Delete G-5	TRP	M.B.	10-82
Title	RC	M.B.	5-86

SAN DIEGO REGIONAL STANDARD DRAWING

DRAINAGE STRUCTURE GRATE

RECOMMENDED BY THE SAN DIEGO REGIONAL STANDARDS COMMITTEE.

Allan A Kershaw — Dec. 1975
Coordinator R.C.E. 19807 — Date

DRAWING NUMBER D-15

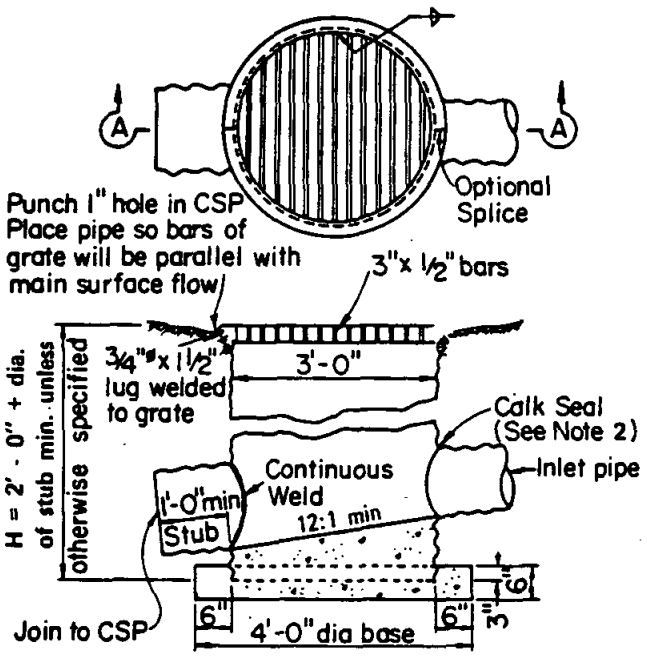

SECTION A-A

TYPE A

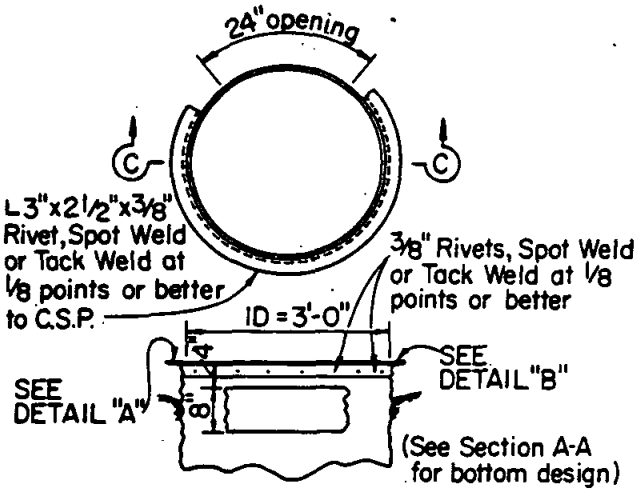

SECTION C-C

TYPE B

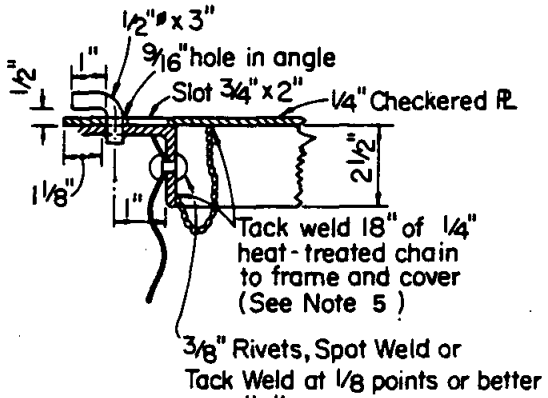

DETAIL "A"

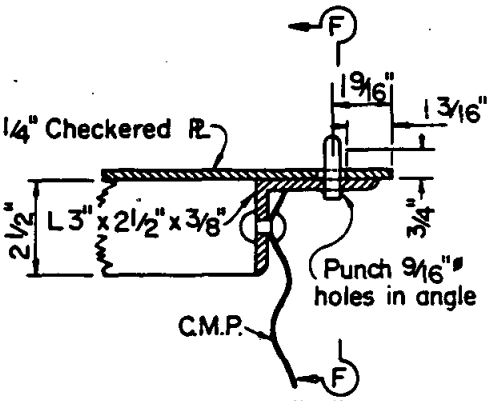

DETAIL "B"

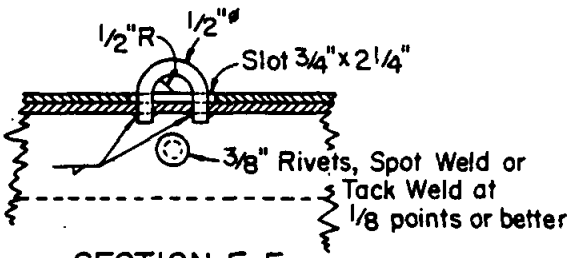

SECTION F-F

NOTES

1. All components shall be galvanized.
2. Inlet and outlet pipes shall be set at factory and positioned as shown on plans.
3. Ladders and Steps: None required where "H" is 3'-6" or less. Where "H" is between 3'-6" and 4'-11" place one step +16" above the floor. If "H" is 5'-0" or more install a ladder placing the lowest rung 16" above the floor and the highest rung not more than 14" below top of inlet. Place single step or ladder in wall without wall opening.
4. See Standard Drawing D-17 for additional details.
5. Grate to be provided when specified.
6. Grate detail shall be as shown on drawing D-17 unless otherwise approved by Agency.

RECOMMENDED BY THE SAN DIEGO REGIONAL STANDARDS COMMITTEE	SAN DIEGO REGIONAL STANDARD DRAWING	Revision	By	Approved	Date
Allen O. Kruchenal Dec. 1975 — Coordinator R.C.E. 19807 — Date		Notes	Sc	O.S.	7-79
DRAWING NUMBER D-16	CORRUGATED STEEL PIPE INLETS TYPES A AND B				

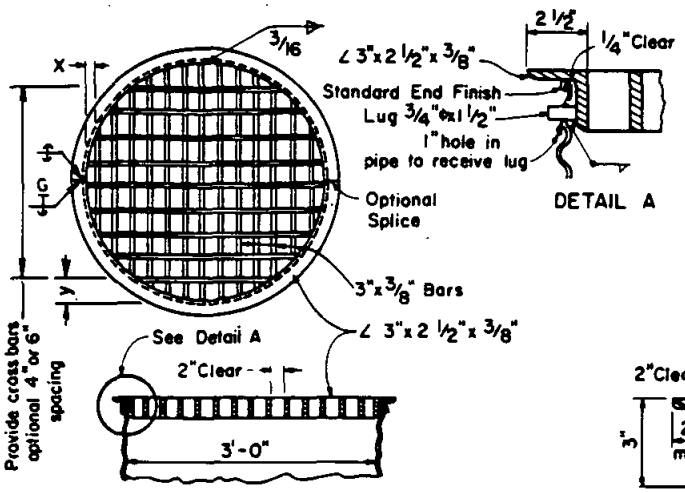

GRATE DETAILS

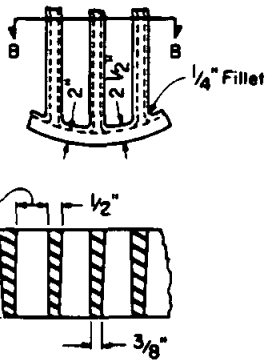

ALTERNATIVE CAST NODULAR IRON GRATE OR CAST STEEL

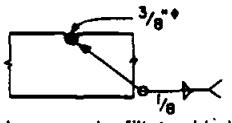

3/8"ϕ Cross bars may be fillet welded, resistance welded or electroforged to bearing bars.

CROSS BAR DETAIL

GRATE (WELDED STEEL)

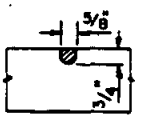

CROSS BAR DETAIL

ALTERNATIVE CAST NODULAR IRON GRATE OR CAST STEEL GRATE

GRATE BAR SPACING TABLE

TYPE	NO. BARS	CLEAR BAR SPACING	X	Y 4" SPACING	Y 6" SPACING
welded	15	2	9/16	3 3/4"	5 3/4"
Cast	13	2	2 1/8	3 3/4	5 3/4

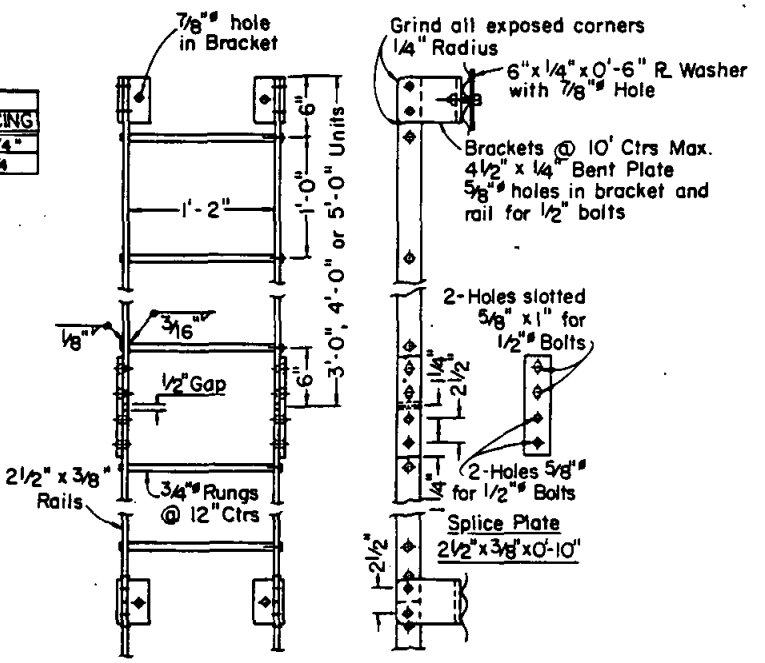

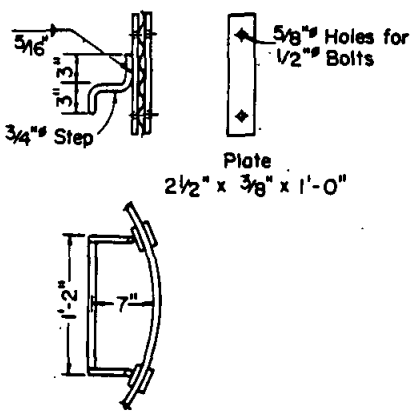

STEP DETAIL

H = 3' - 6" to 4' - 11"

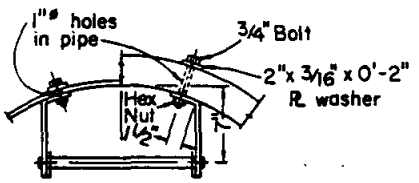

LADDER DETAIL

H = 5' - 0" or GREATER

Revision	By	Approved	Date

SAN DIEGO REGIONAL STANDARD DRAWING

CORRUGATED STEEL PIPE INLETS DETAILS

RECOMMENDED BY THE SAN DIEGO REGIONAL STANDARDS COMMITTEE

Coordinator R.C.E. 19807 — Dec. 1975 Date

DRAWING NUMBER D-17

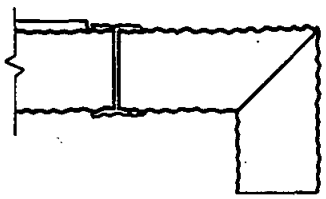

ELBOW

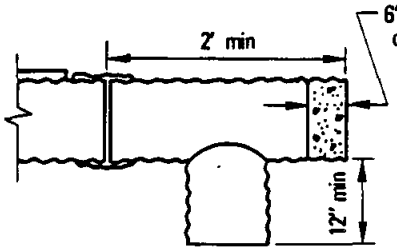

TEE

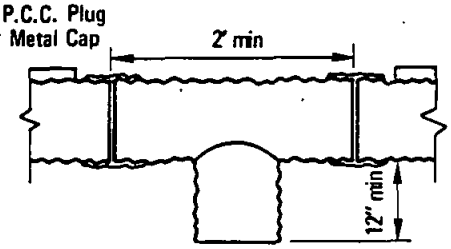

TEE–SAG CONDITION

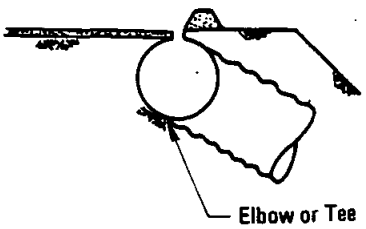

OVERSIDE DRAIN

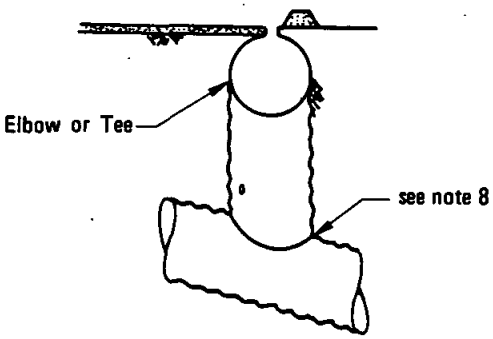

RISER

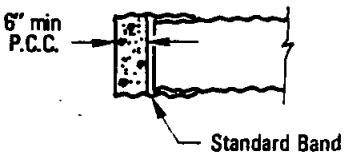

BAND PLUG

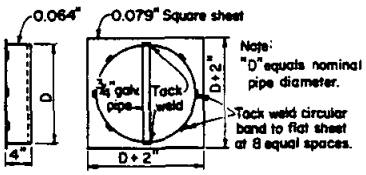

METAL CAP DETAIL

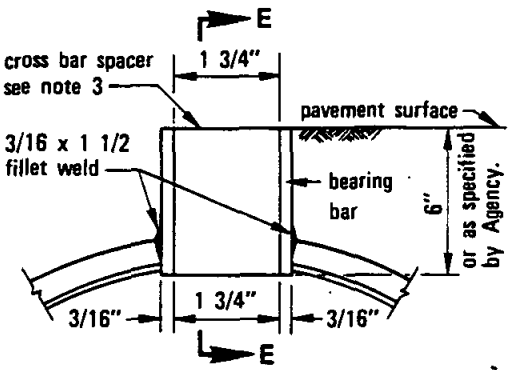

SECTION D–D

GRATE SLOT DETAIL

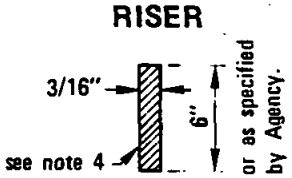

SECTION E–E

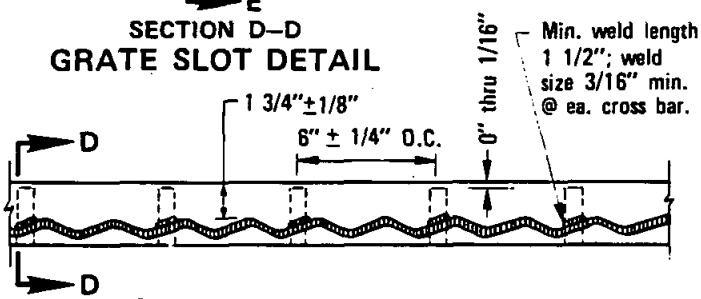

GRATE SLOT WELDING DETAIL

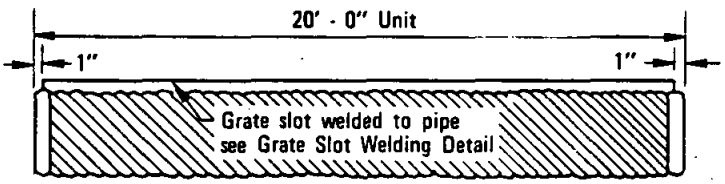

GRATE SLOT DRAIN

NOTES

1. Drain seams may be riveted or resistance spotwelded at equal centers, continuous helical lock seam or helical welded seam.
2. Each drain section shall be assembled with standard coupling bands.
3. Cross bar spacer of grate shall be pressure fusion or plug welded to bearing bars in such a manner as to develop the strength of the cross bar spacer.
4. Cross bar spacer (Section E–E) may differ from that shown provided section area is equal or greater.
5. Grate material shall be a weldable grade of steel complying to the requirements of ASTM A 36.
6. The maximum variance from a straight line from the extreme top corners of the bearing bar shall be 1/2" in 20 feet.
7. Installation lengths shall be 10 feet or multiples thereof.
8. Either field joint sealed with a pliable mixture of sand, portland cement and emulsified asphalt (Mixture of 1 part portland cement, 3 - 5 parts sand and 1 1/2 parts SSI emulsified asphalt), or continuous weld.

RECOMMENDED BY THE SAN DIEGO REGIONAL STANDARDS COMMITTEE Chairman R.C.E. 19807 Dec. 1975 Date	SAN DIEGO REGIONAL STANDARD DRAWING	Revision	By	Approved	Date
		Sect. D-D	TRP	M.B.	10-82
DRAWING NUMBER D-18	SLOTTED CORRUGATED STEEL PIPE DRAIN 12" THROUGH 24"				

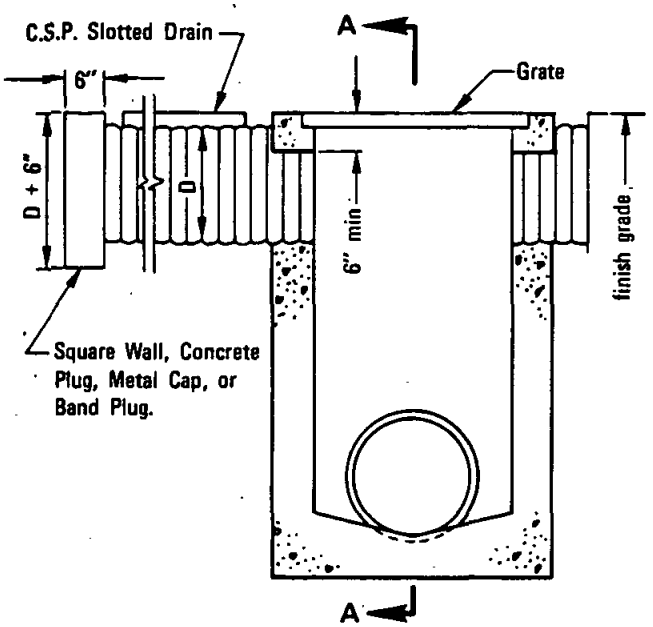

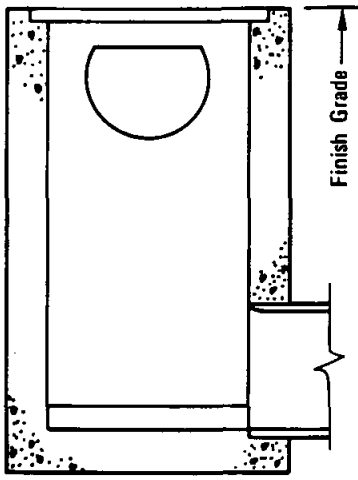

SECTION A–A

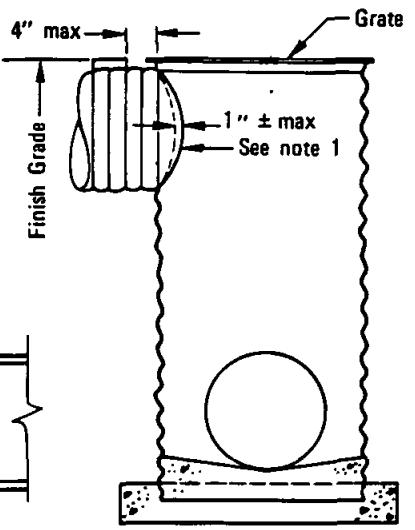

CATCH BASIN

C.S.P. INLET

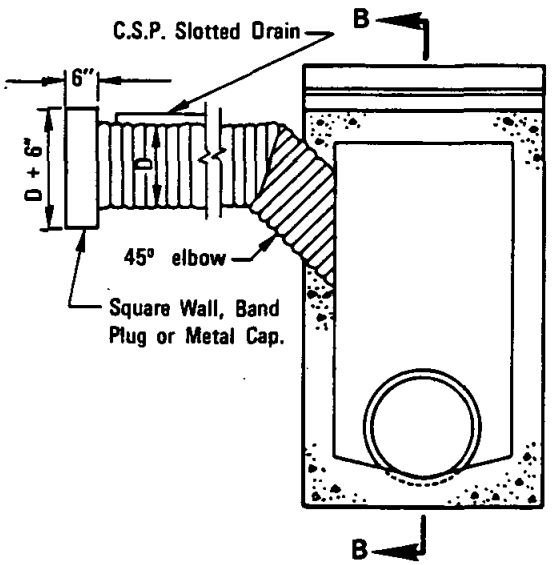

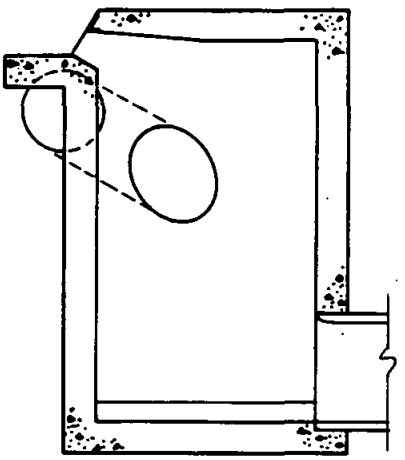

SECTION B–B

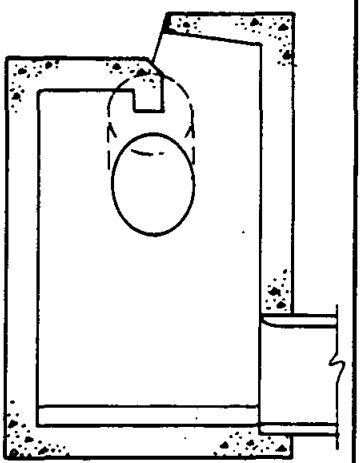

ALTERNATE SECTION B–B

INLETS

NOTES

1. Either field joint with a pliable mixture of sand, portland cement and emulsified asphalt (mixture of 1 part portland cement, 3 - 5 parts sand, and 1 1/2 parts SSI emulsified asphalt), or continuous weld.
2. See Standard Drawing D - 18 for additional notes and details.

Revision	By	Approved	Date

SAN DIEGO REGIONAL STANDARD DRAWING

SLOTTED DRAIN CONNECTIONS TO STANDARD INLETS

RECOMMENDED BY THE SAN DIEGO REGIONAL STANDARDS COMMITTEE

Coordinator R.C.E. 19807 — Dec. 1975 Date

DRAWING NUMBER D-19

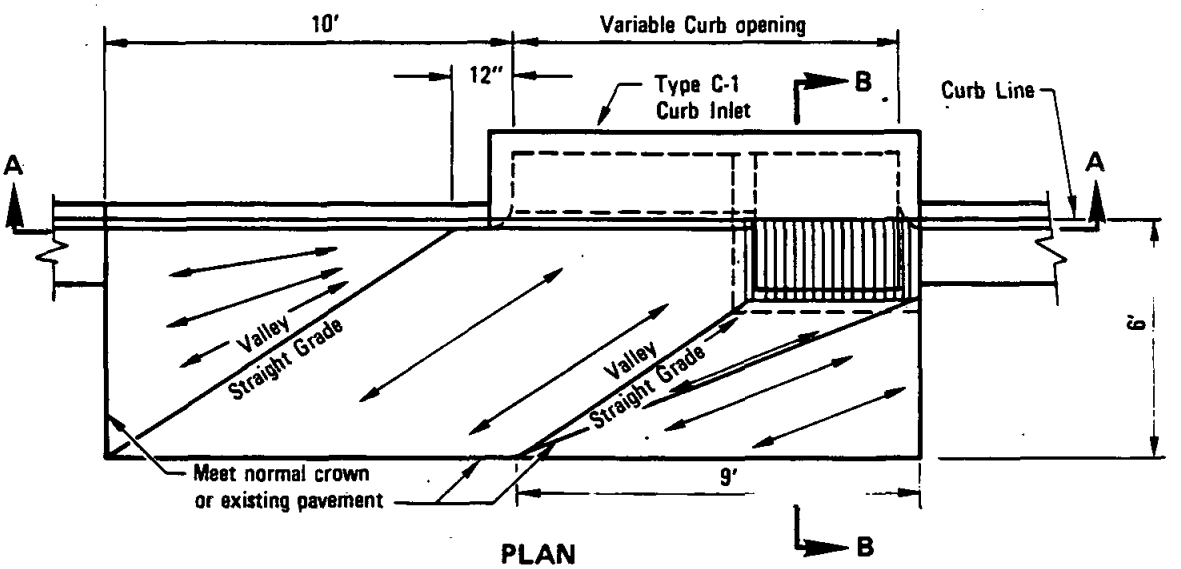

PLAN

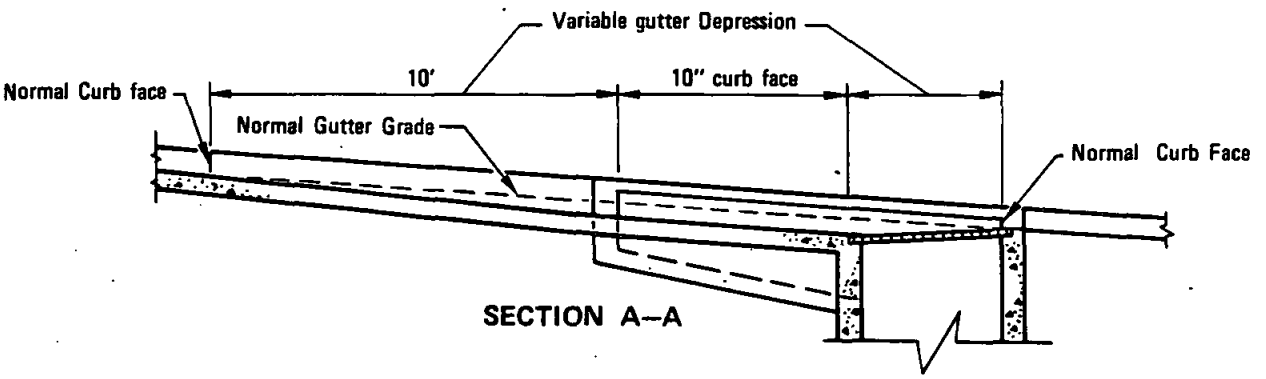

SECTION A–A

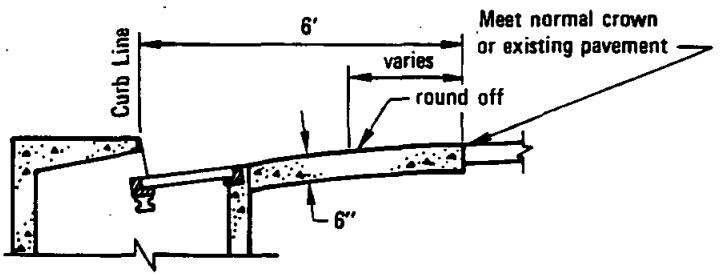

SECTION B–B

NOTES:

1. Curb and apron to be placed monolithically.
2. Use of false header at valleys and slope break line is optional.
3. Extend vertical steel from inlet structure into concrete apron as required.
4. Screed Direction ⟷
5. Concrete shall be 520-C-2500

LEGEND ON PLANS

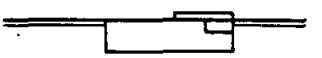

RECOMMENDED BY THE SAN DIEGO REGIONAL STANDARDS COMMITTEE Coordinator H.C.E. 13R07 — Dec. 1975 Date	SAN DIEGO REGIONAL STANDARD DRAWING	Revision	By	Approved	Date
		Conc.		M.B.	5-86
DRAWING NUMBER D-20	CONCRETE APRON FOR CURB INLET				

BLANK PAGE

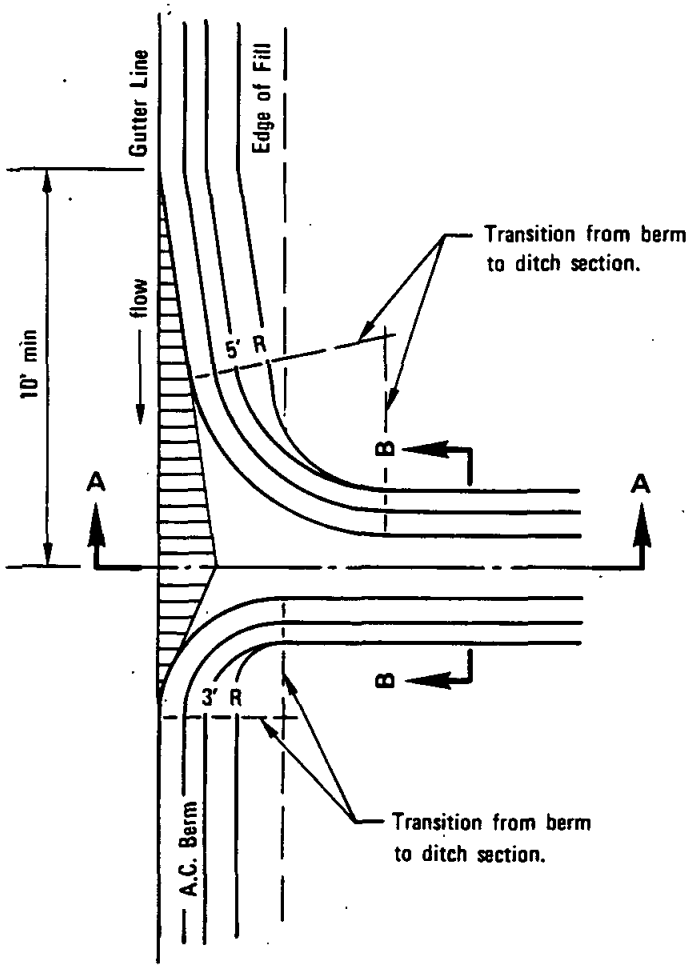

PLAN

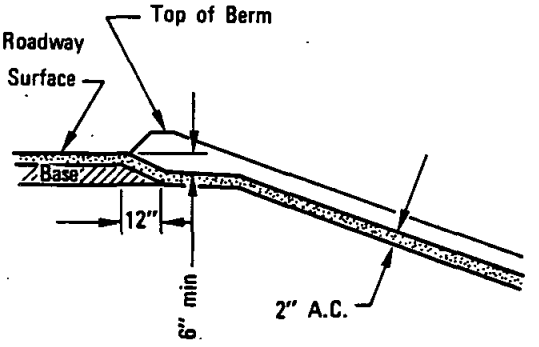

SECTION A–A

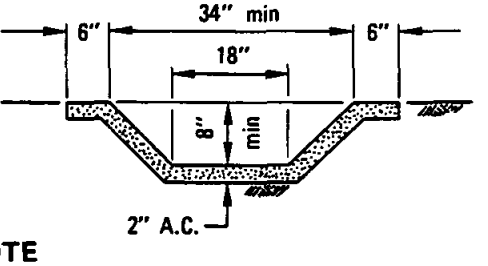

NOTE

Cross - sectional area of ditch may be rounded, or trapezoidal.

SECTION B–B

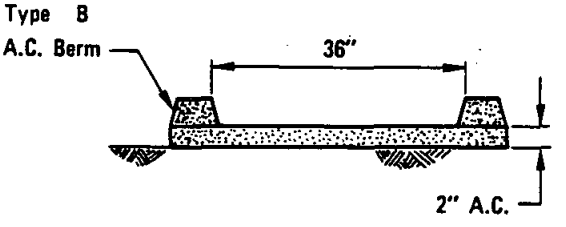

ALTERNATE SECTION B–B

NOTES

1. A.C. spillway may be used when fill is 10' or less, and where fill slope is 1 1/2:1 or flatter.
2. Use 10' min. length of gutter transition on each side of downdrain in sag condition.

LEGEND ON PLANS

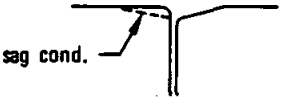

RECOMMENDED BY THE SAN DIEGO REGIONAL STANDARDS COMMITTEE

Allan O. Kruchand — Dec. 1975
Coordinator R.C.E. 19807 — Date

DRAWING NUMBER D-22

SAN DIEGO REGIONAL STANDARD DRAWING

ASPHALT CONCRETE SPILLWAY

Revision	By	Approved	Date
Plan		D. S.	7-79

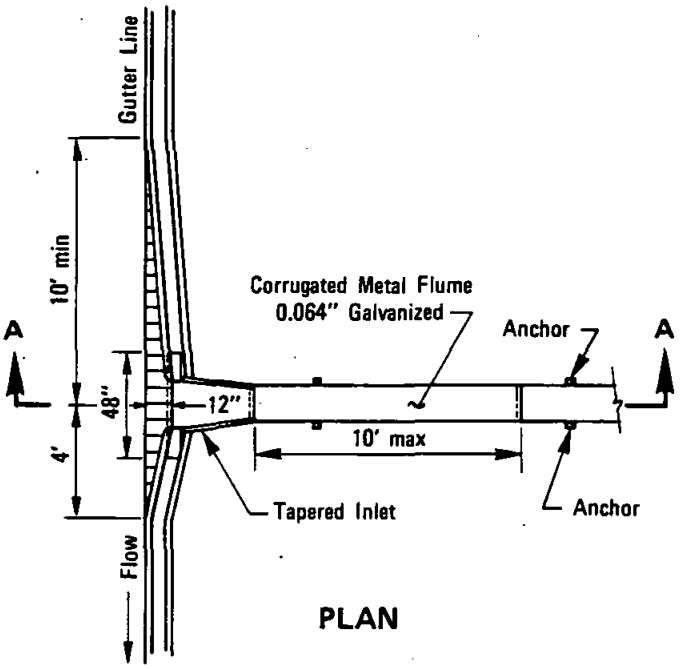

PLAN

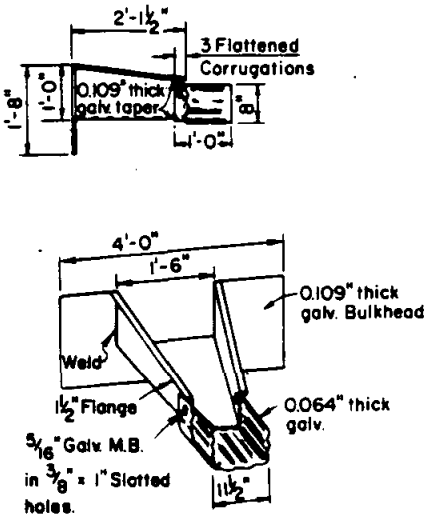

TAPERED INLET

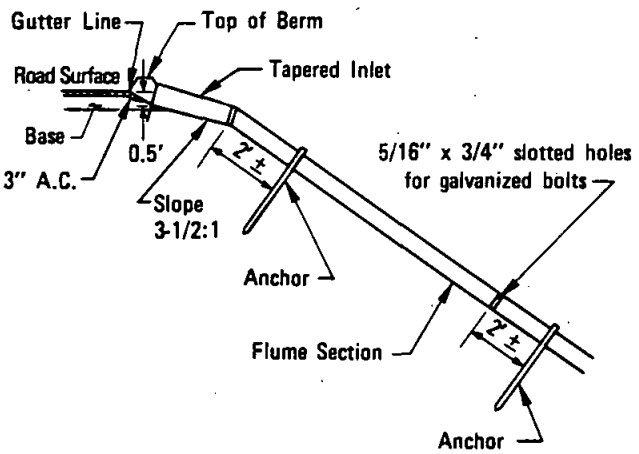

SECTION A–A

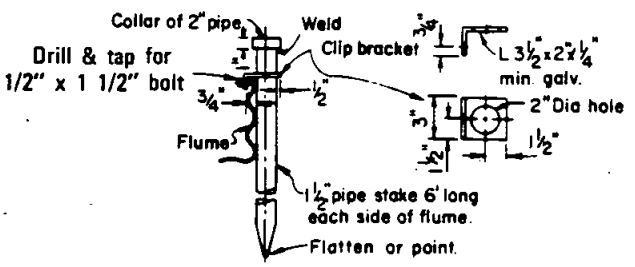

ANCHOR DETAIL

NOTES

1. Downdrain flume may be used where fill slope is 1 1/2 : 1 or flatter.
2. Use 10' min length of gutter transition on each side of downdrain in sag location.
3. All metal parts to be galvanized after fabrication.

LEGEND ON PLANS

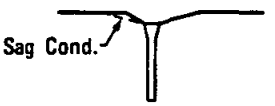

Revision	By	Approved	Date

SAN DIEGO REGIONAL STANDARD DRAWING

TAPERED INLET AND DOWNDRAIN FLUME

RECOMMENDED BY THE SAN DIEGO REGIONAL STANDARDS COMMITTEE

Coordinator R.C.E. 19807 — Dec. 1975 Date

DRAWING NUMBER D-23

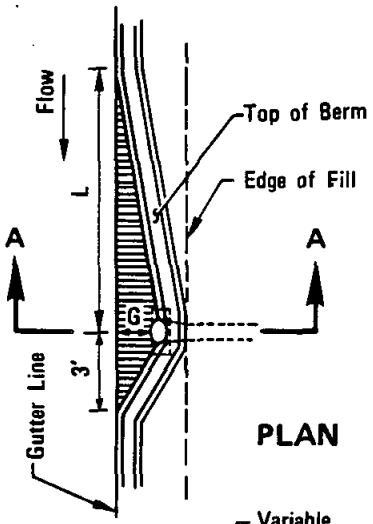

PLAN

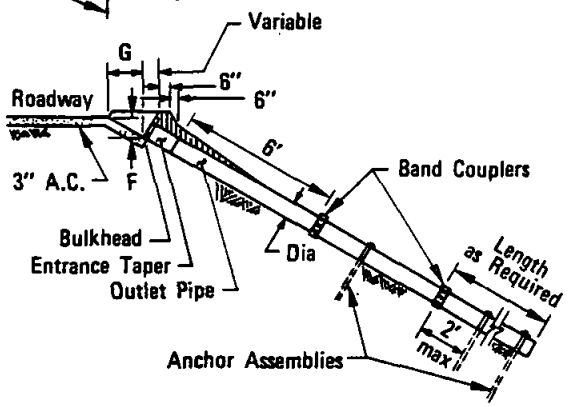

SECTION A–A

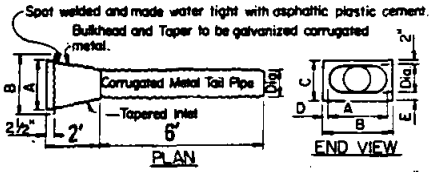

Bulkhead and Taper of same thickness as Tail Pipe with 0.079" Max. Tail Pipe of same thickness as Downdrain Pipe.

ENTRANCE TAPER– TYPE 1 ALTERNATIVE A

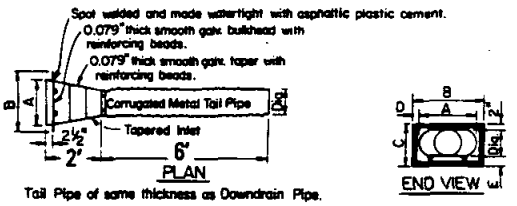

Tail Pipe of same thickness as Downdrain Pipe.

ENTRANCE TAPER–TYPE 1 ALTERNATIVE B

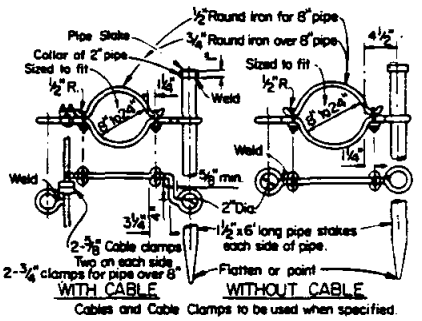

Cables and Cable Clamps to be used when specified.

ANCHOR ASSEMBLY ALTERNATIVE–A

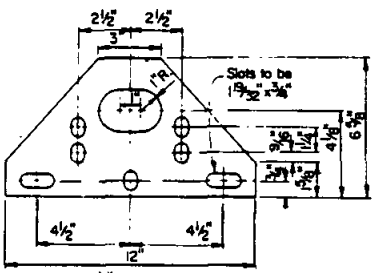

Material to be ¼" plate galvanized after fabrication.

PLATE DETAIL

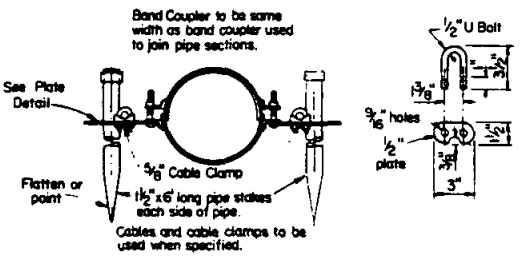

Cables and cable clamps to be used when specified.

ANCHOR ASSEMBLY ALTERNATIVE–B

Dimensions to be as tabulated below for Assembly.

Dia	A	B	C	D	E	F	G	L
8"	16"	25 1/2"	15"	4 3/4"	5"	6"	18"	10'
12"	18"	25 1/2"	19"	3 3/4"	5"	9"	20"	15'
18"	24"	36"	26"	6"	6"	12"	24"	25'

LEGEND ON PLANS

NOTES

1. All metal parts for anchor assemblies shall be galvinized after fabrication.
2. One anchor assembly required per length of pipe. When final length exceeds 10 ft. two anchors shall be required.

RECOMMENDED BY THE SAN DIEGO REGIONAL STANDARDS COMMITTEE

Coordinator R.C.E. 19807 Date Dec. 1975

DRAWING NUMBER D-24

SAN DIEGO REGIONAL STANDARD DRAWING

ENTRANCE TAPER AND DOWNDRAIN PIPE

Revision	By	Approved	Date

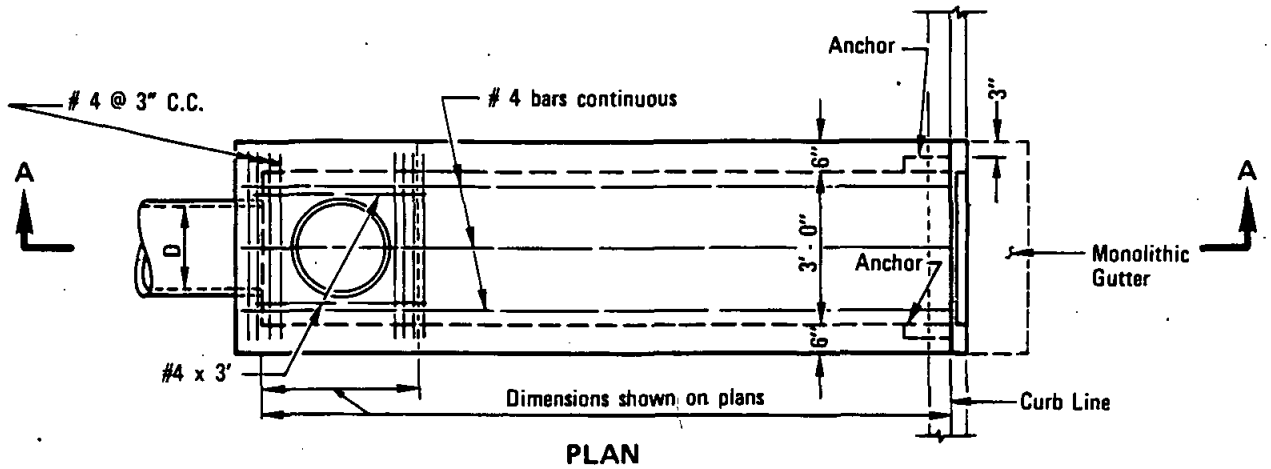

PLAN

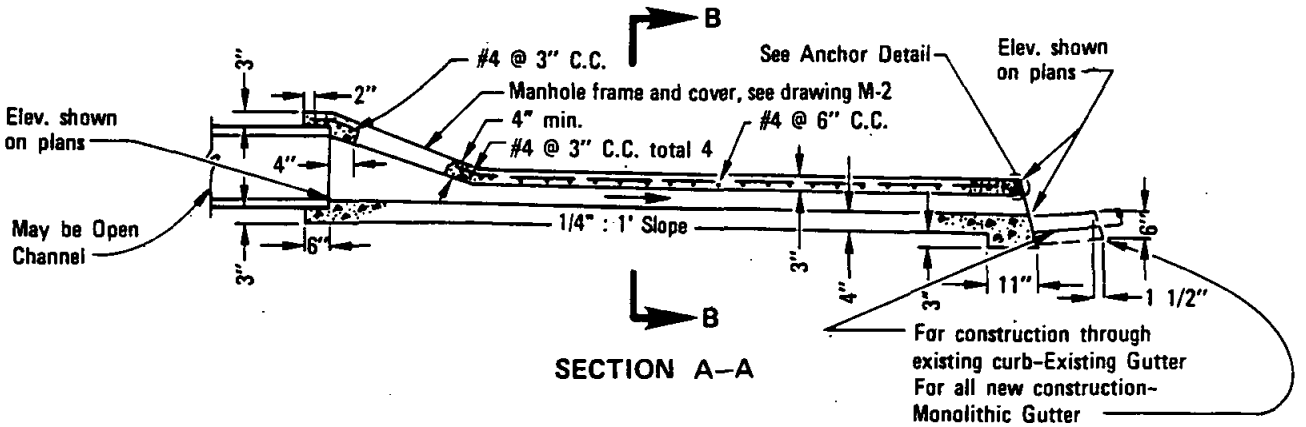

SECTION A–A

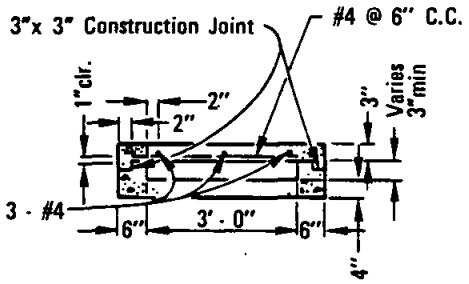

SECTION B–B

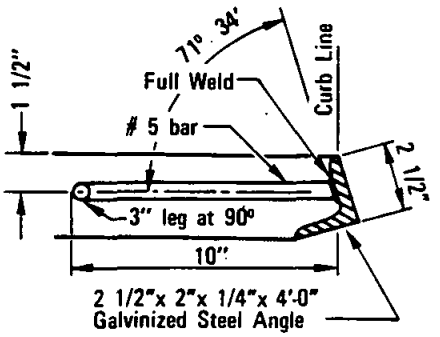

ANCHOR DETAIL

NOTES

1. Concrete shall be 560-C-3250
2. D=inside diameter of pipe or depth of channel.
3. Section to be sloped laterally with top conforming to the grades of the existing sidewalk and curb.
4. Manhole frame and cover may be deleted with open channel.
5. Trowel finish top surface and reproduce markings of existing sidewalk and curb.
6. Trowel finish floor of outlet.

LEGEND ON PLANS

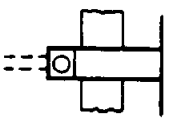

Revision	By	Approved	Date
Bar Size		D.S.	7-79
Conc.		M.B.	5-86
Slope		G.A.	5A2

SAN DIEGO REGIONAL STANDARD DRAWING

CURB OUTLET - TYPE A

RECOMMENDED BY THE SAN DIEGO REGIONAL STANDARDS COMMITTEE

Coordinator R.C.E. 19807 — Dec. 1975 Date

DRAWING NUMBER **D-25**

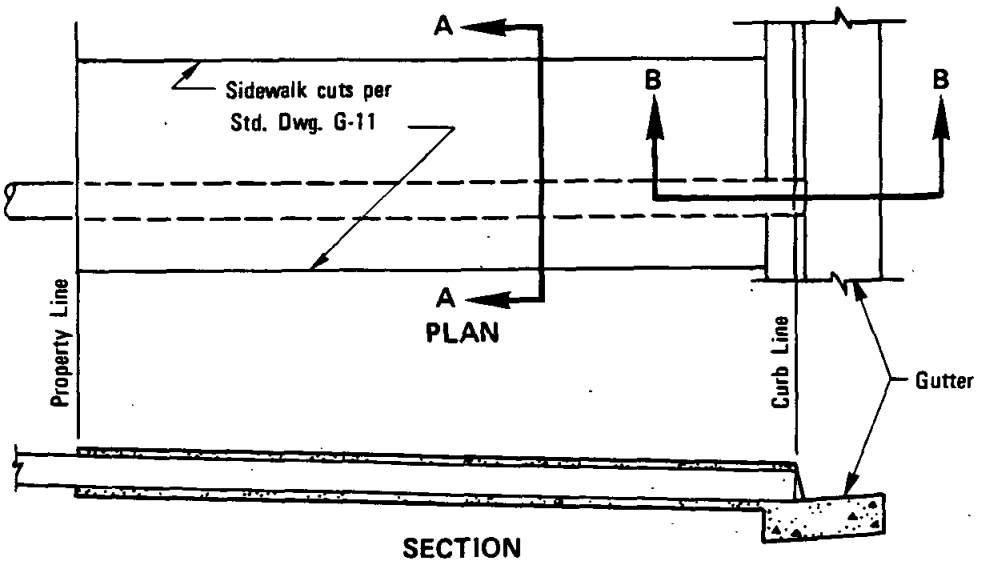

SECTION

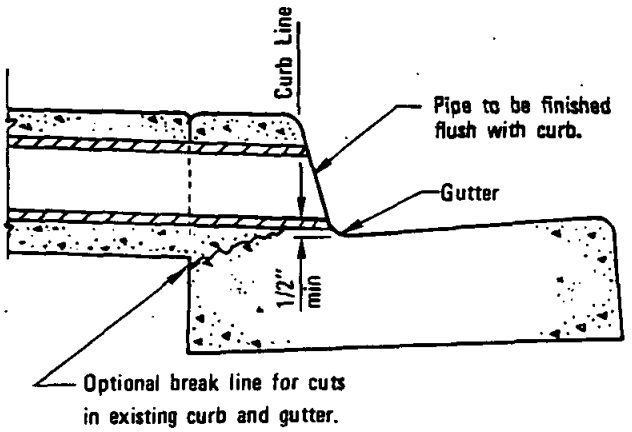

SECTION B–B

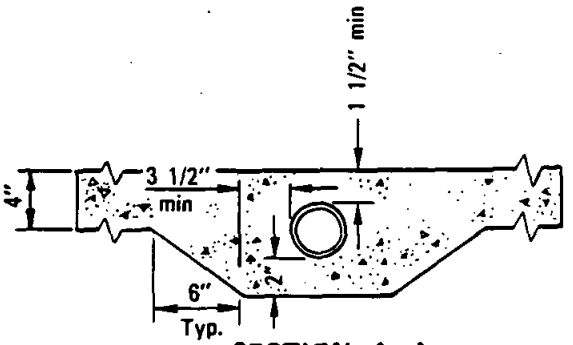

SECTION A–A

APPROVED DRAIN PIPE SIZES	
3"	6" to 8" CURB FACE
4"	8" CURB FACE
6"	10" CURB FACE

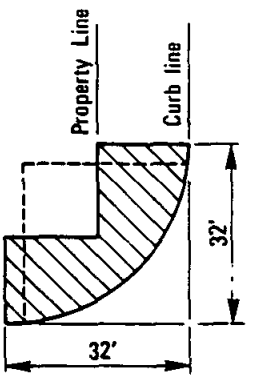

Drain shall not occupy
the hatched area

BLOCK CORNER

NOTES

1. Pipe shall be one continuous length from property line to curb line.
2. Multiple pipes to be set a minimum distance of D/2 apart.
3. Concrete shall be 520-C-2500
4. Pipe shall be circular asbestos cement, cast iron or rigid plastic.

Revision	By	Approved	Date
Modif.	[illegible]	M.B.	5-86

SAN DIEGO REGIONAL STANDARD DRAWING

SIDEWALK UNDERDRAIN PIPE

RECOMMENDED BY THE SAN DIEGO REGIONAL STANDARDS COMMITTEE

[illegible] Dec. 1975

Coordinator R.C.E. 19807 Date

DRAWING NUMBER D-27

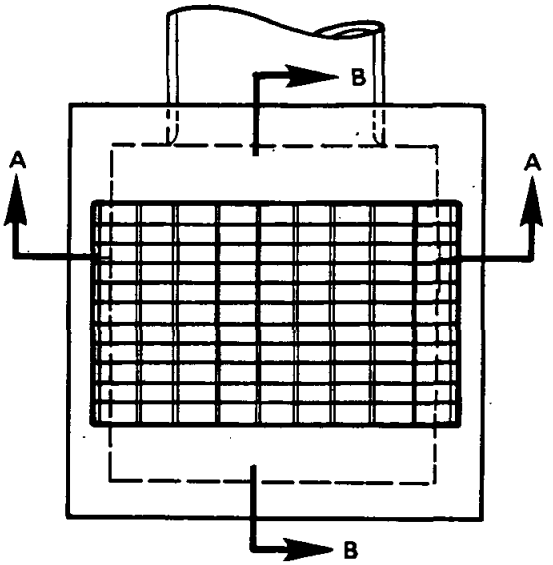

PLAN

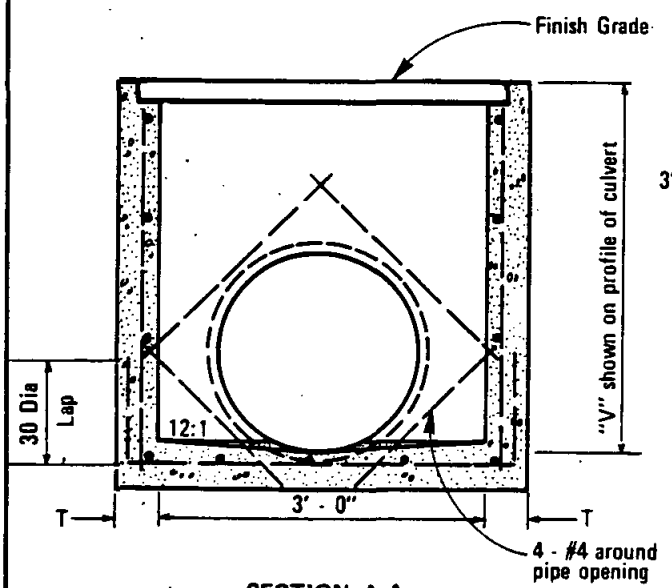

SECTION A-A

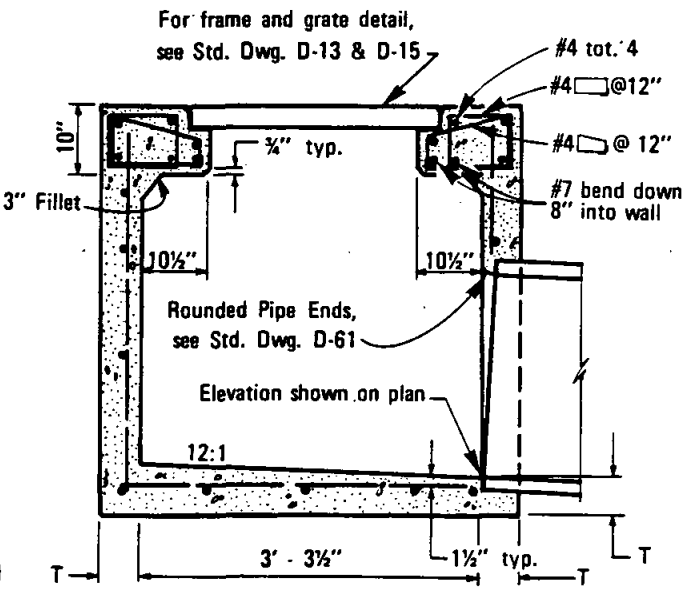

SECTION B-B

NOTES

1. See Standard Drawing D-11 for additional notes and details.
2. When "V" exceeds 4', steps shall be installed.

LEGEND ON PLANS

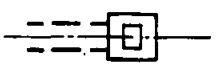

Revision		Approved	Date
Reference	TKP	M.B.	10-82
Modif.		M.B.	5-86

SAN DIEGO REGIONAL STANDARD DRAWING

CATCH BASIN-TYPE I

RECOMMENDED BY THE SAN DIEGO REGIONAL STANDARDS COMMITTEE

Coordinator R.C.E. 25291 July 1979 Date

DRAWING NUMBER D-29

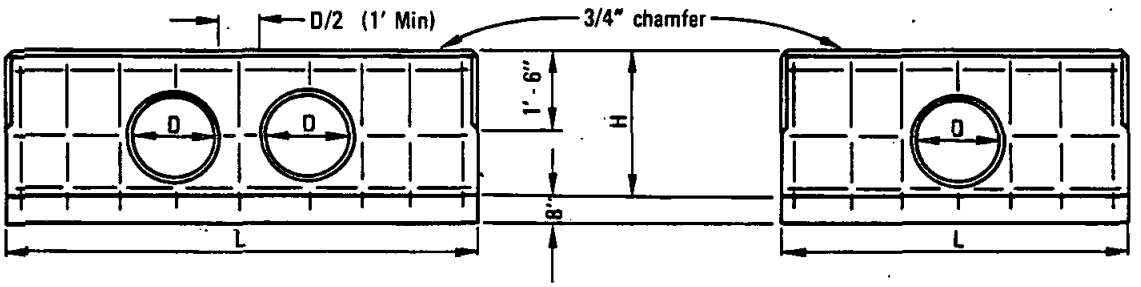

ELEVATION DOUBLE HEADWALL

ELEVATION SINGLE HEADWALL

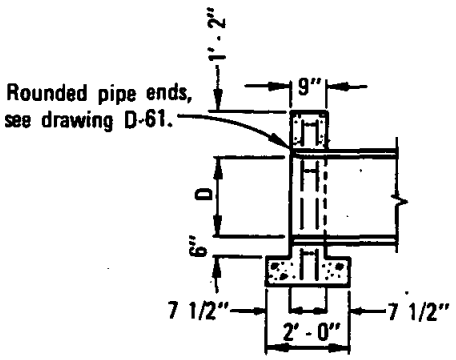

SECTION

D	H	SINGLE			DOUBLE		
		L	Steel Lbs.	Conc C.Y.	L	Steel Lbs.	Conc C.Y.
12"	2'-8"	5'-0"	35	0.60	8'-0"	50	0.94
15"	2'-11"	6'-0"	40	0.75	9'-6"	60	1.17
18"	3'-2"	7'-0"	50	0.91	10'-6"	75	1.35
21"	3'-5"	7'-6"	60	1.02	11'-6"	90	1.52
24"	3'-8"	8'-6"	75	1.20	12'-6"	100	1.72
27"	3'-11"	9'-6"	85	1.39	14'-0"	115	2.00
30"	4'-2"	10'-0"	85	1.52	15'-0"	126	2.21
33"	4'-5"	11'-0"	100	1.73	16'-0"	130	2.42
36"	4'-8"	12'-0"	105	1.95	17'-0"	145	2.65
39"	4'-11"	12'-6"	130	2.09	18'-0"	170	2.88
42"	5'-2"	13'-6"	140	2.34	19'-0"	185	3.13
45"	5'-5"	14'-6"	150	2.60	20'-0"	195	3.38
48"	5'-8"	15'-0"	160	2.75	21'-0"	200	3.64
51"	5'-11"	16'-0"	180	3.03	22'-6"	225	4.02
54"	6'-2"	17'-0"	190	3.31	23'-6"	240	4.30

NOTES

1. Concrete shall be 560-C-3250
2. All reinforcing steel # 4 bars. All vertical and horizontal tie bars 18" maximum spacing.

LEGEND ON PLANS

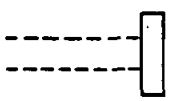

RECOMMENDED BY THE SAN DIEGO REGIONAL STANDARDS COMMITTEE

Coordinator R.C.E. 19807 — Dec. 1975 Date

DRAWING NUMBER **D-30**

SAN DIEGO REGIONAL STANDARD DRAWING

STRAIGHT HEADWALL - TYPE A
(CIRCULAR PIPE)

Revision	By	Approved	Date
Conc.		M.B.	5-86
Dim. lines		A.H.	7-88

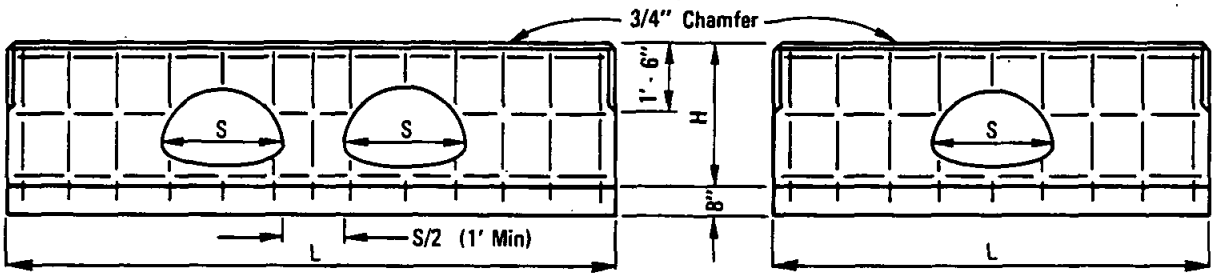

ELEVATION DOUBLE HEADWALL

ELEVATION SINGLE HEADWALL

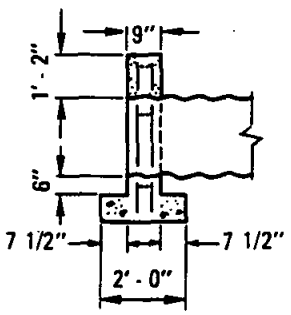

SECTION

C.S.P. ARCH SIZE	H	SINGLE			DOUBLE		
		L	Steel Lbs	Conc Cu. Yds.	L	Steel Lbs	Conc Cu. Yds.
18" x 11"	2' - 7"	5' - 6"	37	0.64	8' - 0"	52	.91
21" x 15"	2' - 11"	6' - 6"	45	0.80	10' - 0"	60	1.22
24" x 18"	3' - 2"	7' - 6"	50	0.96	11' - 6"	70	1.45
28" x 20"	3' - 4"	8' - 6"	60	1.12	13' - 6"	90	1.76
35" x 24"	3' - 8"	10' - 6"	85	1.47	15' - 6"	120	2.16
42" x 29"	4' - 1"	12' - 6"	110	1.76	18' - 0"	145	2.57
49" x 33"	4' - 5"	14' - 6"	130	2.26	21' - 0"	170	3.13
57" x 38"	4' - 10"	17' - 0"	155	2.81	24' - 6"	210	3.86
64" x 43"	5' - 3"	19' - 0"	175	3.31	27' - 0"	230	4.42
71" x 47"	5' - 7"	21' - 0"	195	3.81	30' - 0"	255	5.09

NOTES

1. Concrete shall be 560-C-3250
2. All reinforcing steel # 4 bars. All vertical and horizontal tie bars 18" maximum spacing.

LEGEND ON PLANS

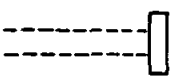

Revision	By	Approved	Date
Conc.	[illegible]	M.B.	5-86

SAN DIEGO REGIONAL STANDARD DRAWING

STRAIGHT HEADWALL - TYPE A
(C.S.P.-ARCH)

RECOMMENDED BY THE SAN DIEGO REGIONAL STANDARDS COMMITTEE

Allan A. Kershaw — Dec. 1975

Coordinator R.C.E. 19807 — Date

DRAWING NUMBER D-31

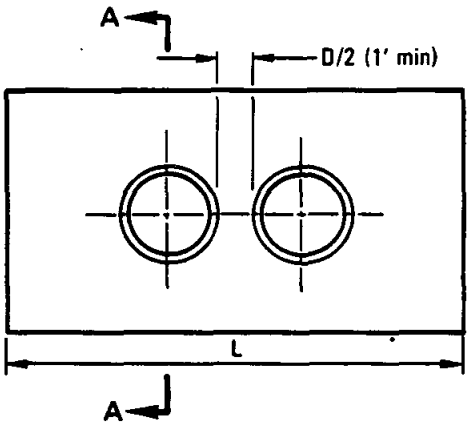

DOUBLE PIPE ELEVATION

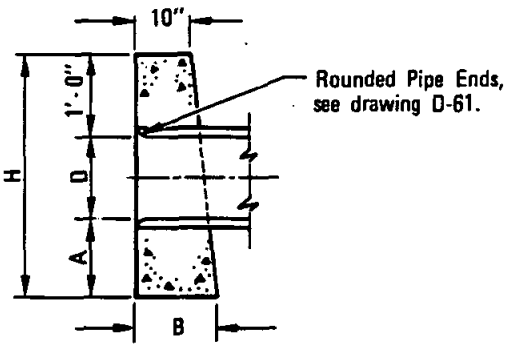

SECTION A–A

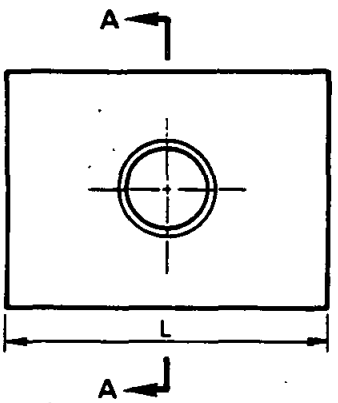

SINGLE PIPE ELEVATION

D	A	B	H	SINGLE		DOUBLE	
				L	Conc C.Y.	L	Conc C.Y.
12"	2'-0"	1'-0"	4'-0"	4'-0"	.45	5'-8"	.62
15"	2'-0"	1'-1"	4'-3"	5'-0"	.63	7'-1"	.85
18"	2'-0"	1'-2"	4'-6"	6'-0"	.83	8'-6"	1.12
24"	2'-6"	1'-5"	5'-6"	8'-0"	1.54	11'-4"	2.09
30"	2'-6"	1'-9"	6'-0"	10'-0"	2.41	14'-2"	3.26
36"	3'-0"	2'-0"	7'-0"	12'-0"	3.74	17'-0"	5.05

NOTES

1. Concrete shall be 560-C-3250
2. Exposed corners to be chamfered 3/4".

LEGEND ON PLANS

RECOMMENDED BY THE SAN DIEGO REGIONAL STANDARDS COMMITTEE

Dec. 1975

Coordinator R.C.E. 13807 Date

DRAWING NUMBER D-32

SAN DIEGO REGIONAL STANDARD DRAWING

STRAIGHT HEADWALL - TYPE B
(CIRCULAR PIPE)

Revision	By	Approved	Date
Conc.		M.B.	5-86

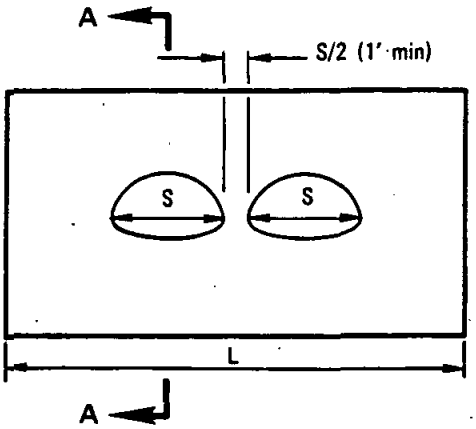

DOUBLE PIPE ELEVATION

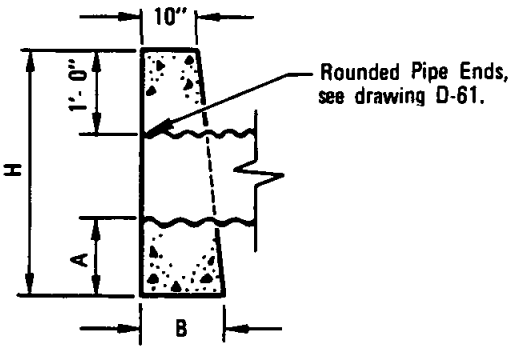

SECTION A–A

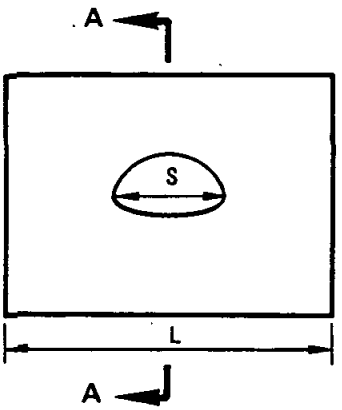

SINGLE PIPE ELEVATION

C.S.P. ARCH SIZE	A	B	H	SINGLE		DOUBLE	
				L	Conc C.Y.	L	Conc C.Y.
18"x 11"	2' - 0"	1' - 2"	3' - 11"	6'	0.83	7' - 3"	0.97
21"x 15"	2' - 0"	1' - 4"	4' - 1"	7'	1.08	9' - 8"	1.46
24"x 18"	2' - 0"	1' - 6"	4' - 4"	8'	1.41	11' - 6"	1.98
28"x 20"	2' - 6"	1' - 8"	5' - 0"	9'	1.97	12' - 6"	2.66
35"x 24"	2' - 6"	2' - 0"	5' - 4"	10'	2.56	14' - 5"	3.60

NOTES

1. Concrete shall be 560-C-3250
2. Exposed corners to be chamfered 3/4".

LEGEND ON PLANS

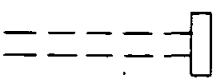

Revision	By	Approved	Date
Conc.	[illegible]	M.B.	5-86

SAN DIEGO REGIONAL STANDARD DRAWING

STRAIGHT HEADWALL - TYPE B
(C.S.P. ARCH)

RECOMMENDED BY THE SAN DIEGO REGIONAL STANDARDS COMMITTEE

Allan A. Kershaw — Coordinator R.C.E. 19807 — Dec. 1975 Date

DRAWING NUMBER D-33

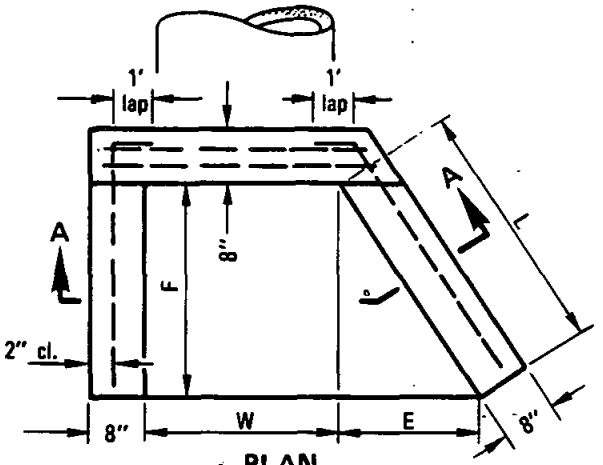

U TYPE PLAN WING TYPE

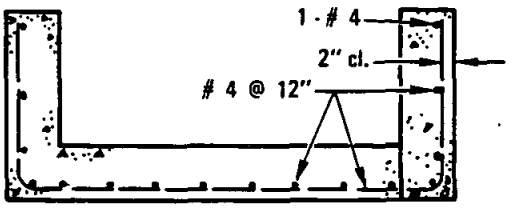

SECTION A–A

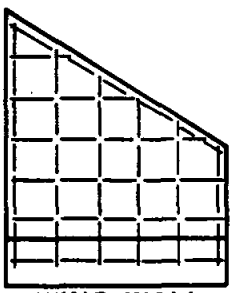

WING WALL REINFORCING

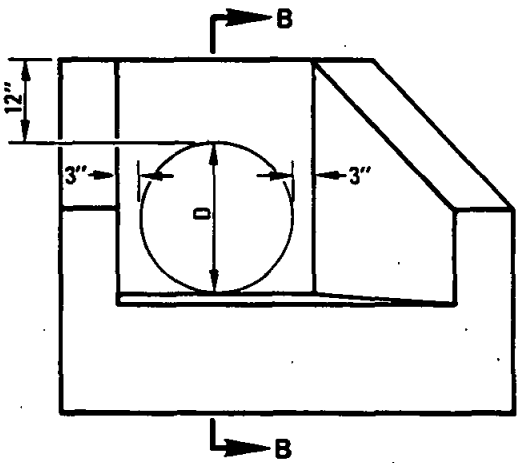

ELEVATION

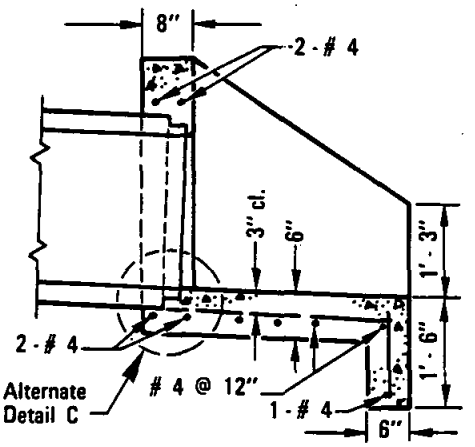

SECTION B–B

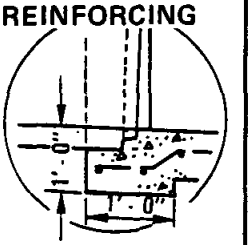

ALT. DETAIL C

DIA OF PIPE	DIMENSIONS			SINGLE PIPE					DOUBLE PIPE				
				W	U TYPE		WING TYPE		W	U TYPE		WING TYPE	
					CONC	STEEL	CONC	STEEL		CONC	STEEL	CONC	STEEL
	L	E	F		C. Y.	LBS.	C. Y.	LBS.		C. Y.	LBS.	C. Y.	LBS.
18"	2'-3 1/8"	1'-3"	1'-10 1/2"	2'-0"	0.55	35	0.63	43	As shown on plans	0.82	53	0.90	61
24"	3'-1 7/8"	1'-9"	2'-7 1/2"	2'-6"	0.79	47	0.93	60		1.22	73	1.36	86
30"	4'-0 5/8"	2'-3"	3'-4 1/2"	3'-0"	1.05	71	1.29	85		1.66	109	1.92	123
36"	4'-11 1/2"	2'-9"	4'-1 1/2"	3'-6"	1.33	88	1.69	114		2.19	136	2.55	162

NOTES:

1. Concrete shall be 560-C-3250
2. Exposed corners to be chamfered 3/4".
3. Multiple pipes to be set a distance of D/2, with a 1' minimum between outside diameters of pipes.
4. Top of headwall shall be placed approximately parallel to profile grade when the grade is 3% or more.
5. Skewed pipes: Dimension W to be increased in width or length due to skew or multiple pipes.
6. For pipe wall thickness greater than 3" use alternate Detail–C.

LEGEND ON PLANS

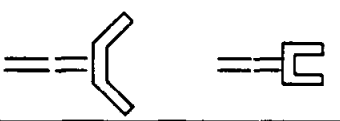

RECOMMENDED BY THE SAN DIEGO REGIONAL STANDARDS COMMITTEE

Coordinator H.C.E. 19807 — Dec. 1975 Date

DRAWING NUMBER D-34

SAN DIEGO REGIONAL STANDARD DRAWING

WING AND U TYPE HEADWALLS FOR 12" TO 36" PIPES

Revision	By	Approved	Date
Conc.		M.B.	5-86

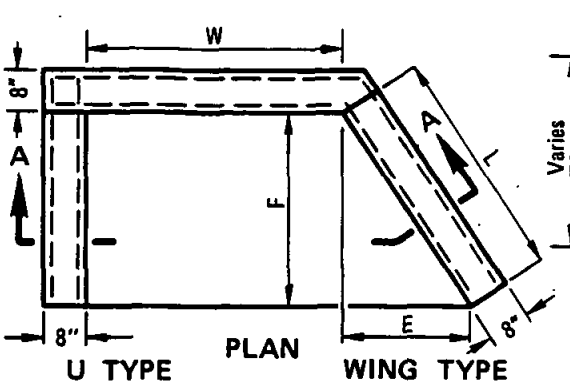

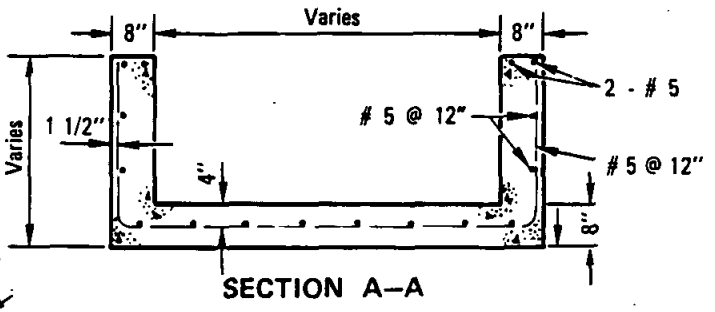

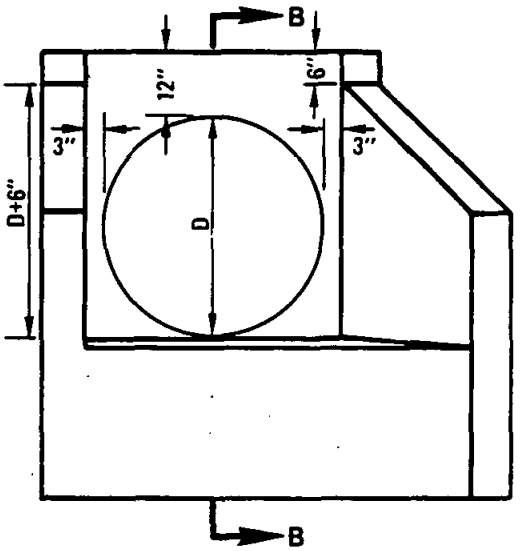

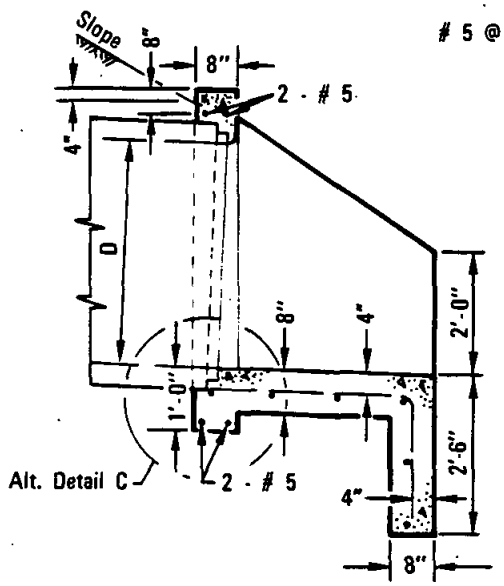

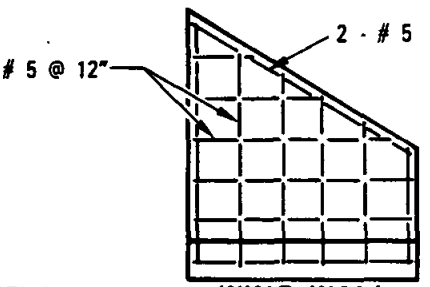

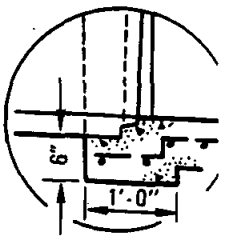

DIA. OF PIPE	DIMENSIONS			SINGLE PIPE					DOUBLE PIPE				
					U TYPE		WING TYPE			U TYPE		WING TYPE	
	L	E	F	W	CONC. C.Y.	STEEL LBS.	CONC. C.Y.	STEEL LBS.	W	CONC. C.Y.	STEEL LBS.	CONC. C.Y.	STEEL LBS.
42"	3'-7 1/4"	2'-0"	3'-0"	4'-0"	1.57	117	1.90	135	AS SHOWN ON PLANS	2.69	190	3.16	214
48"	4'-6"	2'-6"	3'-9"	4'-6"	1.97	153	2.48	184		3.43	252	4.06	288
54"	5'-4 7/8"	3'-0"	4'-6"	5'-0"	2.41	190	3.07	246		4.24	319	5.06	368
60"	6'-3 3/4"	3'-6"	5'-3"	5'-6"	2.88	239	3.75	294		5.13	386	6.17	442
66"	7'-2 1/2"	4'-0"	6'-0"	6'-0"	3.38	294	4.52	356		6.08	454	7.20	516
72"	8'-1 3/8"	4'-6"	6'-9"	6'-6"	3.93	368	5.52	417		7.11	522	8.30	588
78"	9'-0"	5'-0"	7'-6"	7'-0"	4.50	444	6.70	503		8.20	595	9.50	693
84"	9'-10 3/4"	5'-6"	8'-3"	7'-6"	5.21	540	8.15	619		9.50	687	10.80	786

Note: Dimensions E and L apply to wing type only.

NOTES

1. Skewed Pipes: Dimension W to be increased to take care of increased width or length due to skew of multiple pipes.
2. Tops of headwalls, on grade culverts, shall be placed parallel to profile grade when the grades are 3% or more.
3. Concrete shall be 560-C-3250
4. Exposed corners shall be chamfered 3/4".
5. Multiple pipes shall be set a distance of D/2, with a 1' minimum, between outside diameters of pipes.
6. For pipe wall thickness greater than 3" use Alternate Detail-C.

LEGEND ON PLANS

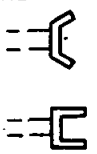

Revision	By	Approved	Date
Conc.		M.B.	5-86

SAN DIEGO REGIONAL STANDARD DRAWING

WING AND U TYPE HEADWALLS FOR 42" TO 84" PIPES

RECOMMENDED BY THE SAN DIEGO REGIONAL STANDARDS COMMITTEE

Coordinator R.C.E. 19807 — Dec. 1975 Date

DRAWING NUMBER **D-35**

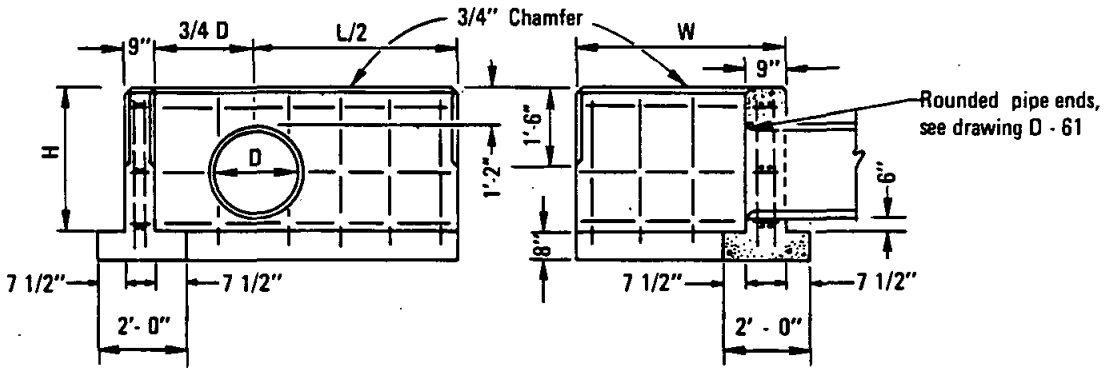

ELEVATION SECTION

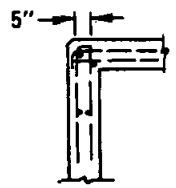

CORNER STEEL DETAIL

D	H	L/2	LENGTH OF W									
			3' - 4"		4' - 10"		6' - 4"		7' - 10"		9' - 4"	
			Steel lbs.	Conc C. Y.	Steel lbs.	Conc C. Y.	Steel lbs.	Conc C. Y.	Steel lbs.	Conc C. Y.	Steel lbs.	Conc C. Y.
12"	2' - 8"	2' - 6"	50	.79	60	.98						
15"	2' - 11"	3' - 0"	55	.91	65	1.11						
18"	3' - 2"	3' - 6"	65	1.04	75	1.25						
21"	3' - 5"	3' - 9"	75	1.15	90	1.36						
24"	3' - 8"	4' - 3"	85	1.29	100	1.51	110	1.74				
27"	3' - 11"	4' - 9"	90	1.44	105	1.67	115	1.91				
30"	4' - 2"	5' - 0"	95	1.55	110	1.80	120	2.05	135	2.29		
33"	4' - 5"	5' - 6"	105	1.71	120	1.97	135	2.23	150	2.48		
36"	4' - 8"	6' - 0"	110	1.88	125	2.15	140	2.41	155	2.68	170	2.95
39"	4' - 11"	6' - 3"			150	2.28	170	2.56	185	2.84	200	3.12
42"	5' - 2"	6' - 9"			155	2.42	175	2.76	190	3.05	210	3.34
45"	5' - 5"	7' - 3"					180	2.97	200	3.27	215	3.57
48"	5' - 8"	7' - 6"					190	3.13	216	3.44	230	3.75
51"	5' - 11"	8' - 0"							220	3.67	235	3.99
54"	6' - 2"	8' - 6"							235	3.91	250	4.24

NOTES

1. Concrete shall be 560-C-3250
2. All reinforcing steel # 4 bars. All vertical and horizontal tie bars 18" maximum spacing.
3. When multiple pipes are used, the distance between pipes shall be D/2 (1' min.). Dimension L/2 is from the center of the pipe nearest to the end of the headwall as shown.

LEGEND ON PLANS

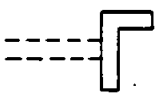

RECOMMENDED BY THE SAN DIEGO REGIONAL STANDARDS COMMITTEE

Chairman R.C.E. 19807 Dec. 1975 Date

SAN DIEGO REGIONAL STANDARD DRAWING

L TYPE HEADWALLS CIRCULAR PIPES

Revision	By	Approved	Date
Conc.		M.B.	5-86

DRAWING NUMBER D-36

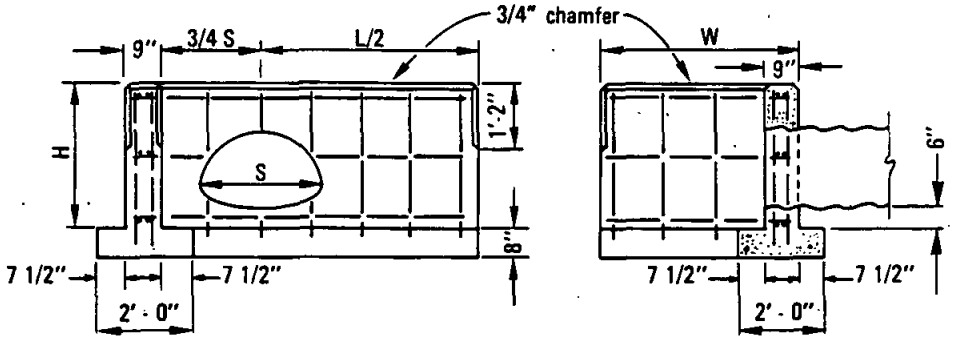

ELEVATION

SECTION

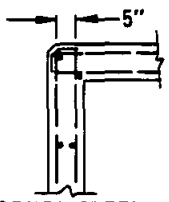

CORNER STEEL DETAIL

C.S.P. ARCH SIZE	H	L/2	LENGTH OF W									
			3'-4"		4'-10"		6'-4"		7'-10"		9'-4"	
			Steel lbs.	Conc C. Y.	Steel lbs.	Conc C. Y.	Steel lbs.	Conc C. Y.	Steel lbs.	Conc C. Y.	Steel lbs.	Conc C. Y.
18"x 11"	2'-7"	2'-9"	50	0.84	60	1.03	70	1.21	80	1.39	90	1.57
21"x 15"	2'-11"	3'-3"	60	1.00	65	1.18	75	1.38	90	1.58	100	1.77
24"x 18"	3'-2"	3'-9"	60	1.07	70	1.32	80	1.53	95	1.74	110	1.94
28"x 20"	3'-4"	4'-3"	70	1.26	80	1.47	90	1.68	100	1.90	115	2.11
35"x 24"	3'-8"	5'-3"	100	1.51	110	1.74	120	1.97	140	2.20	155	2.42
42"x 29"	4'-1"	6'-3"	115	1.82	130	2.06	140	2.31	155	2.55	170	2.83
49"x 33"	4'-5"	7'-3"	130	2.12	145	2.37	155	2.64	170	2.90	185	3.15
57"x 38"	4'-10"	8'-6"	145	2.52	160	2.79	175	3.07	190	3.35	205	3.61
64"x 43"	5'-3"	9'-6"	185	2.89	200	3.11	215	3.48	235	3.77	250	4.06
71"x 47"	5'-7"	10'-6"	200	3.25	215	3.56	235	3.86	250	4.17	270	4.48

NOTES

1. Concrete shall be 560-C-3250
2. All reinforcing steel # 4 bars. All vertical and horizontal tie bars 18" maximum spacing.
3. When multiple pipes are used, the distance between pipes shall be S/2 (1' min.). The dimension L/2 is from the center of the pipe nearest to the end of the headwall as shown.

LEGEND ON PLANS

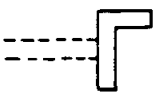

Revision	By	Approved	Date
Elev.	RC	D.S.	7-79
Conc.	RC	M.B.	5-86

SAN DIEGO REGIONAL STANDARD DRAWING

L TYPE HEADWALLS
(C.S.P. ARCH)

RECOMMENDED BY THE SAN DIEGO REGIONAL STANDARDS COMMITTEE

Allan A. Kershaw — Dec. 1975

Coordinator R.C.E. 19807 — Date

DRAWING NUMBER D-37

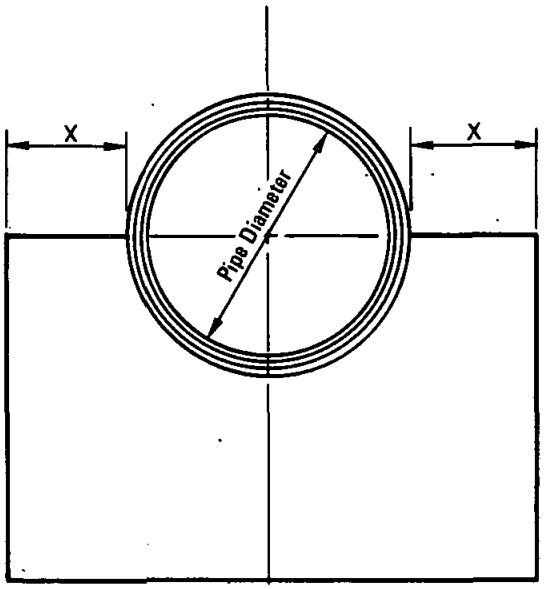

FACE ELEVATION

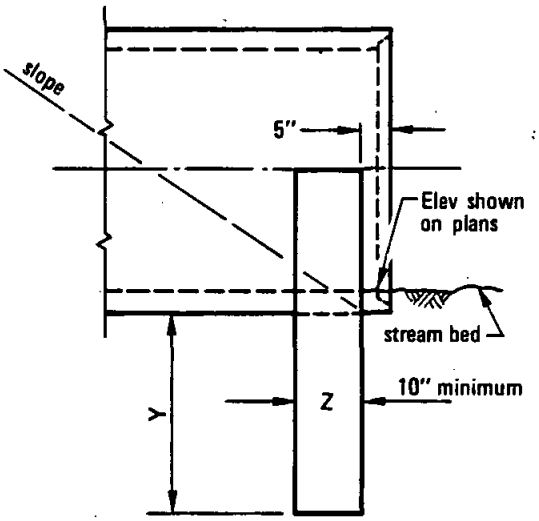

SIDE ELEVATION

PIPE DIAMETER	X	Y	Z
12" to 24"	1' - 0"	2' - 0"	10"
21" to 36"	1' - 6"	2' - 6"	12"
39" to 48"	2' - 0"	3' - 0"	12"
51" to 60"	2' - 6"	3' - 0"	14"
63" & Larger	3' - 0"	3' - 0"	14"

NOTES:

1. A curtain wall shall be used in place of a headwall at culvert ends where extension of the culvert is considered imminent or no fill is retained.
2. Concrete shall be 560-C-3250
3. Keep the pipe-end clear of obstructions to permit easy placing of culvert extension.

LEGEND ON PLANS

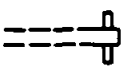

RECOMMENDED BY THE SAN DIEGO REGIONAL STANDARDS COMMITTEE

Coordinator H.C.E. 19807 — Date: Dec. 1975

DRAWING NUMBER D-38

SAN DIEGO REGIONAL STANDARD DRAWING

CURTAIN WALL

Revision	By	Approved	Date
Conc.		M. B.	5-86

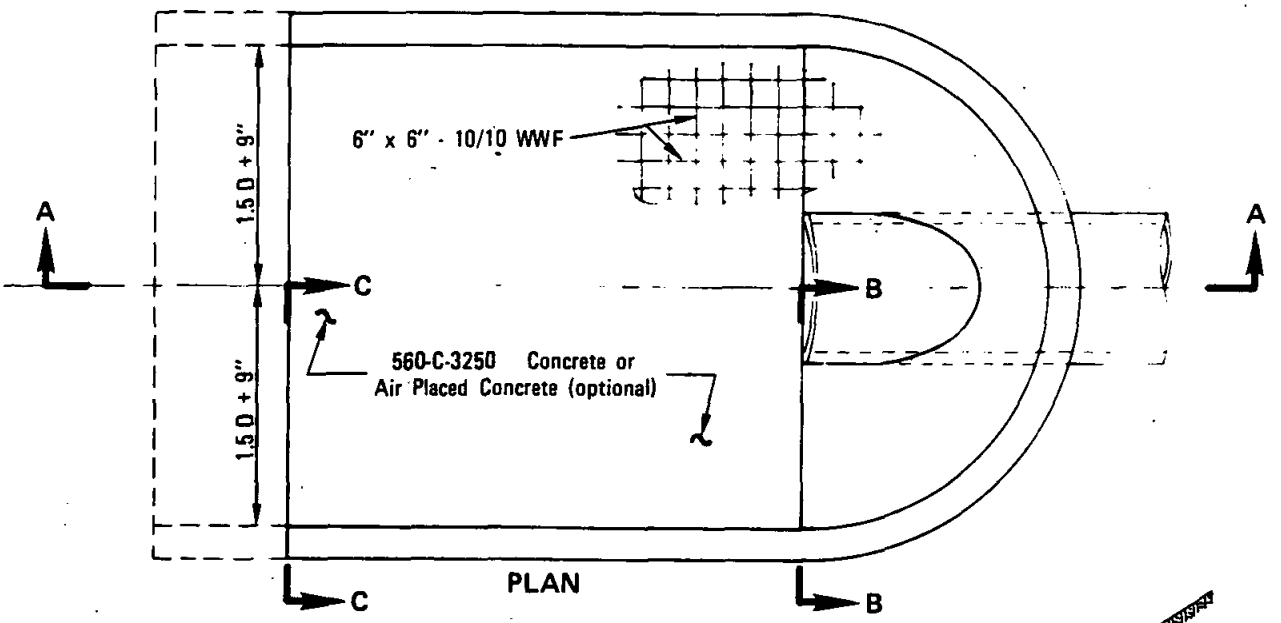

PLAN

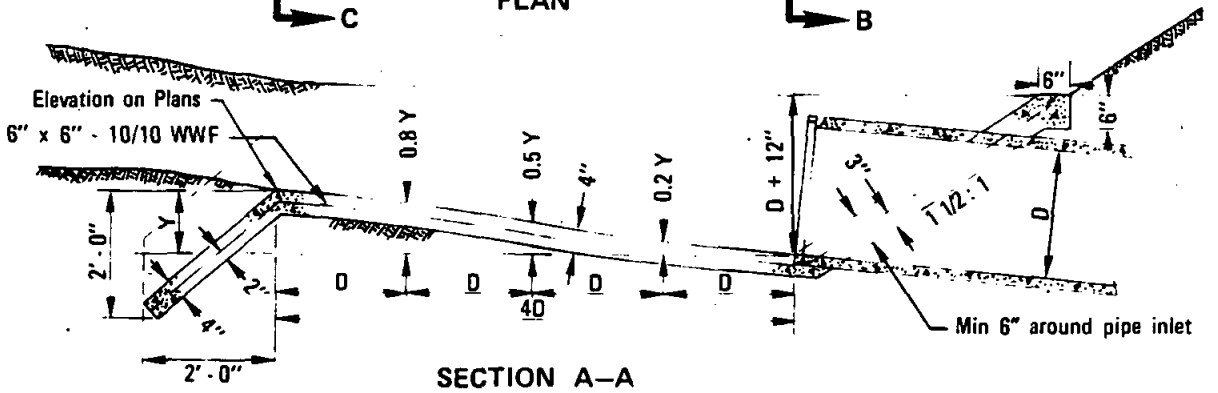

SECTION A–A

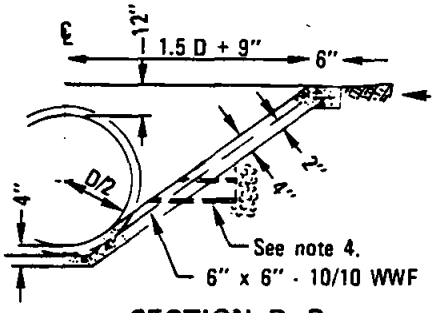

SECTION B–B

Inlet constr. sym. about ℄ except for multiple pipe installations (see note 1)

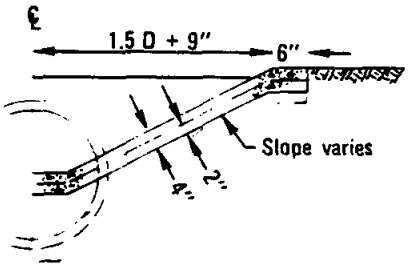

SECTION C–C

NOTES

1. When more than one pipe is used the profile view shown shall hold for the distance across all pipe openings. Sections A-A and B-B shall be from the outermost pipe. The distance between pipes shall be D/2 for round and Span/3 for arch pipe. (12" minimum)
2. Culvert shall be cut off even with apron surface when required by the Agency.
3. Use Inlet Apron only where a flared end section can not be utilized.
4. Place weep holes when required by the Agency.

LEGEND ON PLANS

Revision	By	Approved	Date
Sec. A-A	[illegible]	D.S.	7-79
Sect. B-B	TRP	M.B.	10-82
Conc.	RA	M.B.	5-86

SAN DIEGO REGIONAL STANDARD DRAWING

INLET APRON FOR CULVERTS UP TO 42" DIAMETER

RECOMMENDED BY THE SAN DIEGO REGIONAL STANDARDS COMMITTEE

Allan A. Kershaw — Dec. 1975

Coordinator R.C.E. 19807 — Date

DRAWING NUMBER D-39

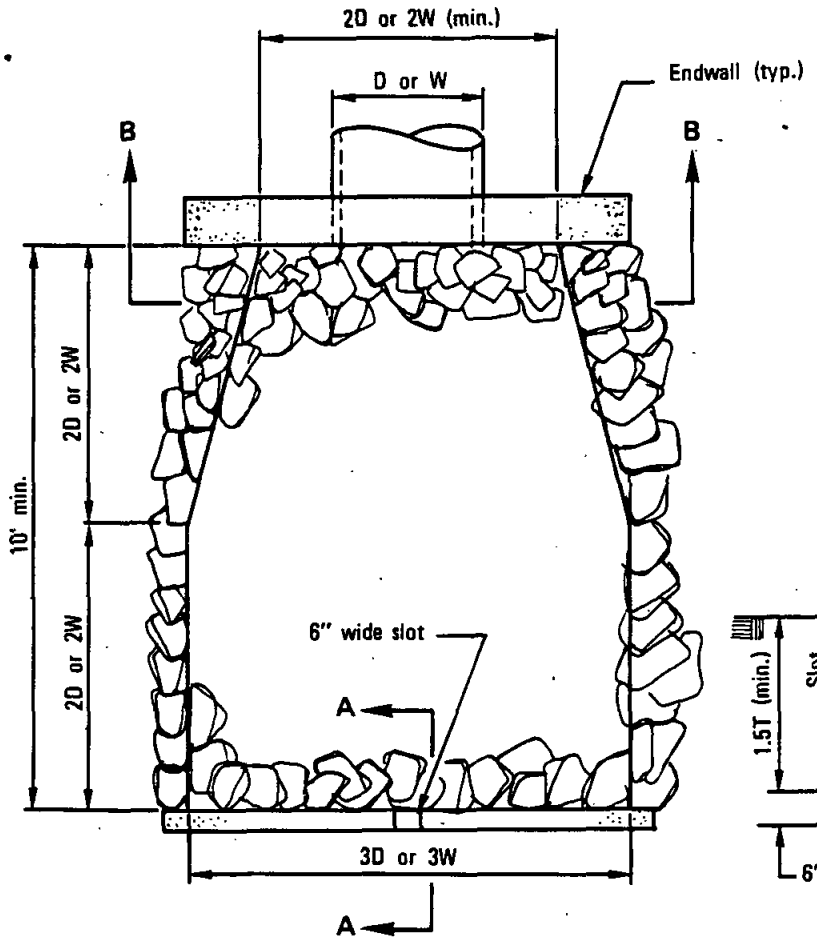

PLAN

D = Pipe Diameter
W = Bottom Width of Channel

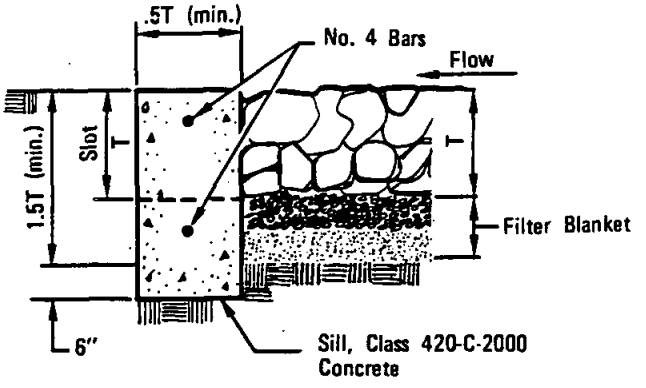

SECTION A–A

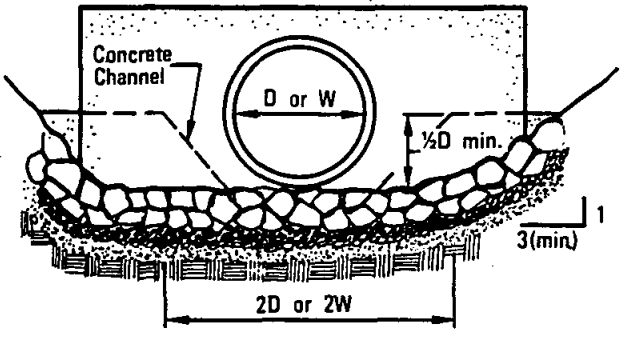

SECTION B–B

NOTES:

1. Plans shall specify:
   A) Rock class and thickness (T).
   B) Filter material, number of layers and thickness.
2. Rip rap shall be either quarry stone or broken concrete (if shown on the plans.) Cobbles are not acceptable.
3. Rip rap shall be placed over a filter blanket which may be either granular material or plastic filter cloth.
4. See standard special provisions for selection of rip rap and filter blanket.
5. Rip rap energy dissipators shall be designated as either Type 1 or Type 2. Type 1 shall be with concrete sill; Type 2 shall be without sill.

RECOMMENDED BY THE SAN DIEGO REGIONAL STANDARDS COMMITTEE

Chairman R.C.E. 19807 — Dec. 1975 Date

SAN DIEGO REGIONAL STANDARD DRAWING

Revision	By	Approved	Date
Sill, filter	TKP	M.B.	10-82

RIP RAP ENERGY DISSIPATOR

DRAWING NUMBER D-40

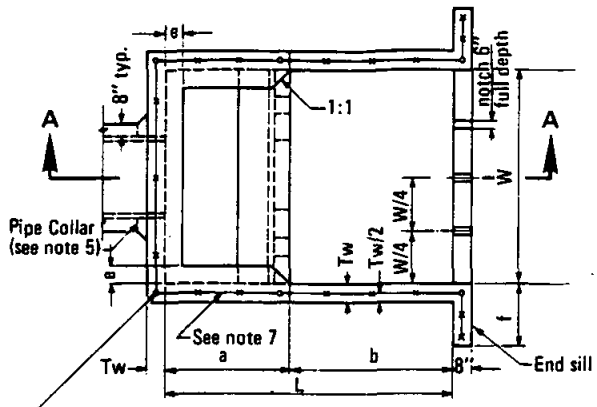

PLAN

Note: Riprap not shown.

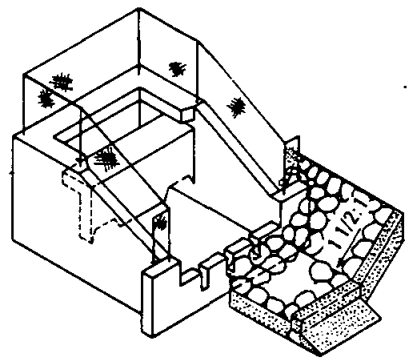

PICTORIAL VIEW

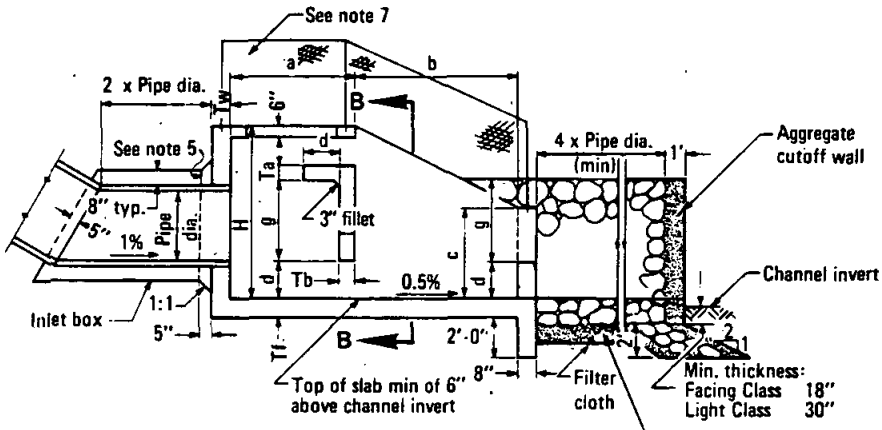

SECTION A–A

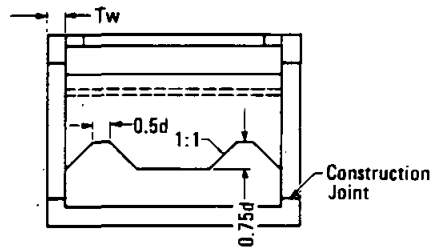

SECTION B–B

NOTES

1. Design:
   Equivalent Fluid Pressure = 60 p.c.f.
   Maximum Outlet Velocity = 35 f.p.s.
2. Concrete shall be 560-C-3250
3. Reinforcing shall conform to ASTM designation A615 and may be grade 40 or 60. Reinforcing shall be placed with 2" clear concrete cover unless noted otherwise. Splices shall not be permitted except as indicated on the plans.
4. For pipe grades not exceeding 20%, inlet box may be omitted.
5. If inlet box is omitted, construct pipe collar as shown.
6. Unless noted otherwise, all reinforcing bar bends shall be fabricated with standard hooks.
7. Five foot high chain link fencing, embed post 18" deep in walls and encase with Class B mortar.
8. In Sandy and Silty soil:
   a) Riprap and aggregate base cutoff wall required at the end of rock apron.
   b) Filter cloth (Polyfilter X or equivalent) shall be installed on native soil and base, minimum of 1 ft. overlaps at joints.
9. Rip rap and subbase classification shall be as shown on plans.

Pipe Dia (in)	18	24	30	36	42	48	54	60	72
Area (sq.ft.)	1.77	3.14	4.91	7.07	9.62	12.57	15.90	19.63	28.27
Max. Q (cfs)	21	38	59	85	115	151	191	236	339
W	5' - 6"	6' - 9"	8' - 0"	9' - 3"	10' - 6"	11' - 9"	13' - 0"	14' - 3"	16' - 6"
H	4' - 3"	5' - 3"	6' - 3"	7' - 3"	8' - 0"	9' - 0"	9' - 9"	10' - 9"	12' - 3"
L	7' - 4"	9' - 0"	10' - 8"	12' - 4"	14' - 0"	15' - 8"	17' - 4"	19' - 0"	22' - 0"
a	3' - 3"	3' - 11"	4' - 7"	5' - 3"	6' - 0"	6' - 9"	7' - 4"	8' - 0"	9' - 3"
b	4' - 1"	5' - 1"	6' - 1"	7' - 1"	8' - 0"	8' - 11"	10' - 0"	11' - 0"	12' - 9"
c	2' - 4"	2' - 10"	3' - 4"	3' - 10"	4' - 5"	4' - 11"	5' - 5"	5' - 11"	6' - 11"
d	0' - 11"	1' - 2"	1' - 4"	1' - 7"	1' - 9"	2' - 0"	2' - 2"	2' - 5"	2' - 9"
e	0' - 6"	0' - 6"	0' - 8"	0' - 8"	0' - 10"	0' - 10"	1' - 0"	1' - 0"	1' - 3"
f	1' - 6"	2' - 0"	2' - 6"	3' - 0"	3' - 0"	3' - 0"	3' - 0"	3' - 0"	3' - 0"
g	2' - 1"	2' - 6"	3' - 0"	3' - 6"	3' - 11"	4' - 5"	4' - 11"	5' - 4"	6' - 2"
Tf	8"			10"		12"			
Tb	7"			9 1/2"		10 1/2"			
Tw	7"			9 1/2"		10 1/2"			
Ta	7"			8"					

Revision	By	Approved	Date
Note 9	[illegible]	D.S	7-79
Conc.	[illegible]	M.B.	5-86

SAN DIEGO REGIONAL STANDARD DRAWING

CONCRETE ENERGY DISSIPATOR

RECOMMENDED BY THE SAN DIEGO REGIONAL STANDARDS COMMITTEE

Allan O Kruckeberg Dec. 1975
Coordinator R.C.E. 19807 Date

DRAWING NUMBER D-41

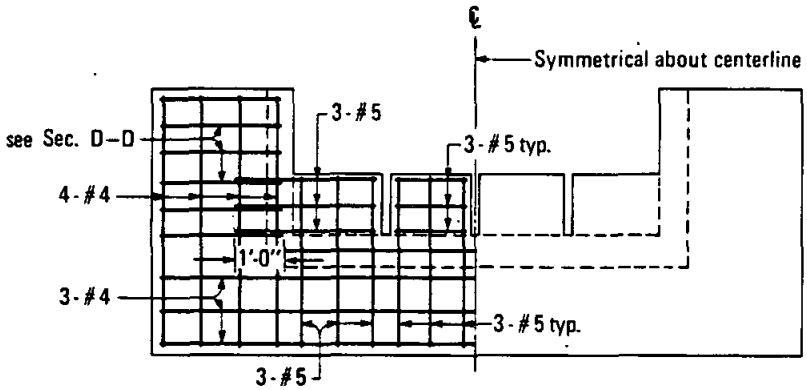

END SILL ELEVATION

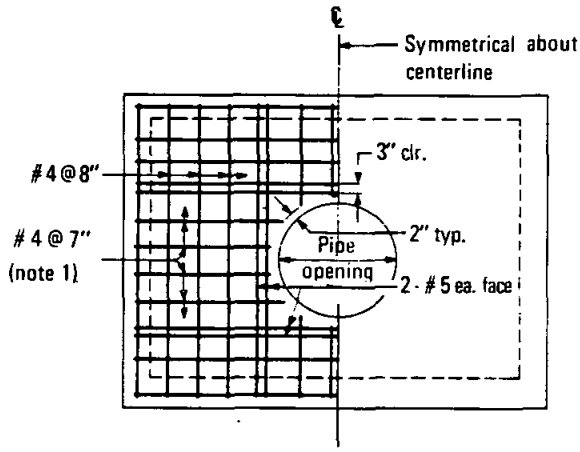

HEADWALL ELEVATION

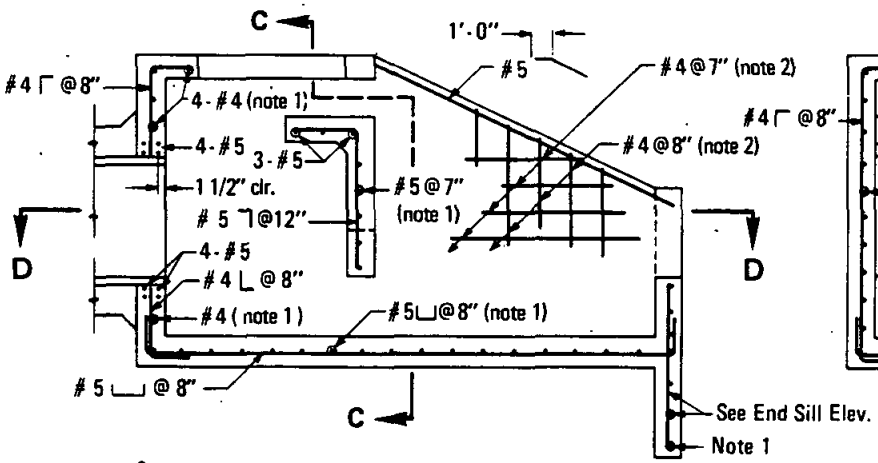

SECTION A–A

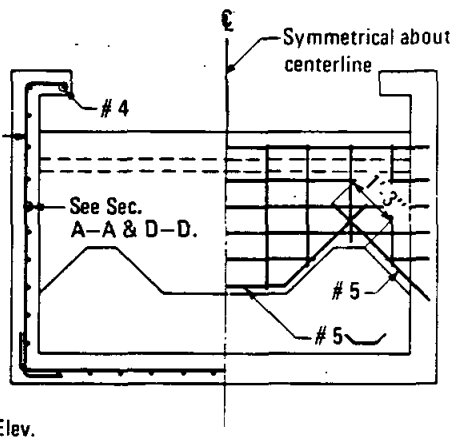

SECTION C–C

NOTES

1. Place reinforcing, as noted, at center wall (or slab).
2. Match location of reinforcing with that in headwall, end sill and foundation slab.
3. All reinforcing shall be placed with 2" concrete cover, unless noted otherwise.

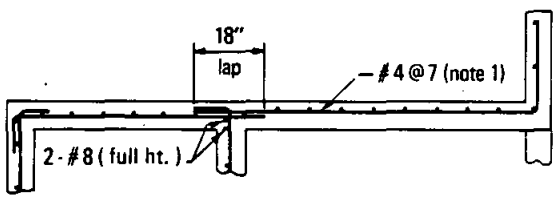

SECTION D–D

RECOMMENDED BY THE SAN DIEGO REGIONAL STANDARDS COMMITTEE	SAN DIEGO REGIONAL STANDARD DRAWING	Revision	By	Approved	Date
Coordinator R.C.E. 19807 — Dec. 1975 Date	CONCRETE ENERGY DISSIPATOR (REINFORCEMENT) 18" TO 30" DIAMETER PIPE				
DRAWING NUMBER D-42					

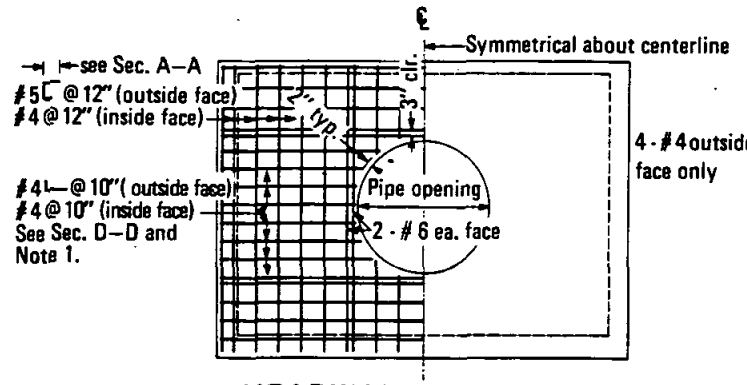

HEADWALL ELEVATION

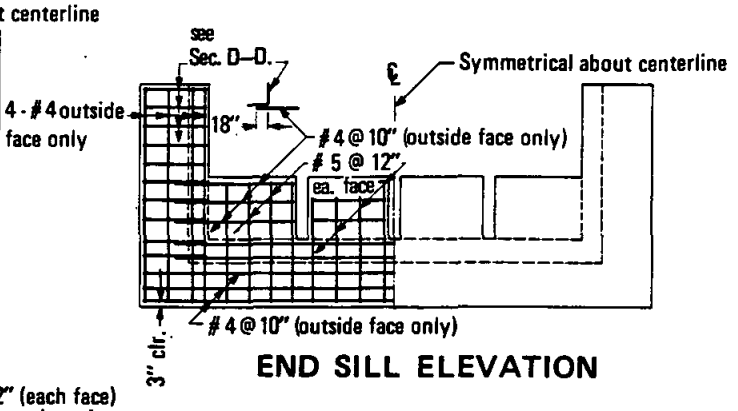

END SILL ELEVATION

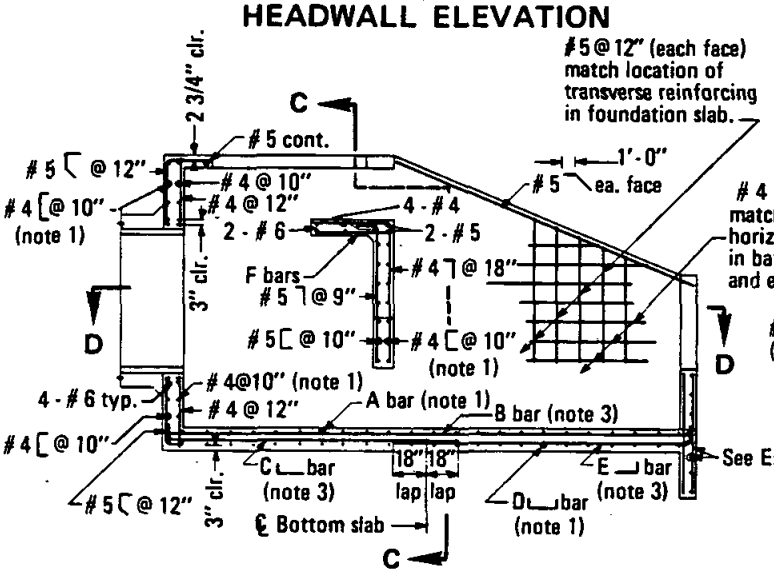

SECTION A–A

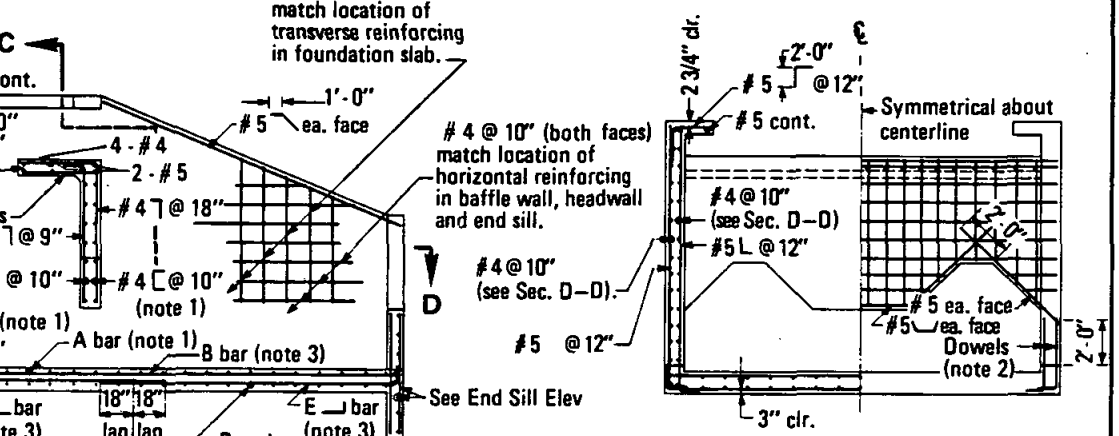

SECTION C–C

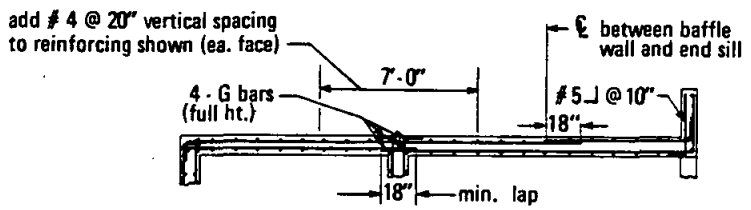

SECTION D–D

NOTES

1. Match location of sidewall reinforcing.
2. Dowels having same size and spacing as wall reinforcing may be used in lieu of continuous bars at contractors option.
3. Match location of headwall or end sill reinforcing.

Pipe dia. (in.)	36	42	48	54	60	72
A bar	# 5 @ 12"		# 6 @ 12"		# 7 @ 12"	
B bar	# 5 @ 12"		# 6 @ 12"			
C bar	# 4 @ 12"		# 5 @ 12"			
D bar	# 4 @ 12"		# 5 @ 12"		# 6 @ 12"	
E bar	# 4 @ 12"		# 5 @ 12"			
F bar	# 4 @ 9"		# 5 @ 9"			#6@9"
G bar	# 7			# 11		

Revision	By	Approved	Date

SAN DIEGO REGIONAL STANDARD DRAWING

CONCRETE ENERGY DISSIPATOR (REINFORCEMENT) 36" TO 72" DIAMETER PIPE

RECOMMENDED BY THE SAN DIEGO REGIONAL STANDARDS COMMITTEE

Coordinator R.C.E. 19807 — Dec. 1975 Date

DRAWING NUMBER D-43

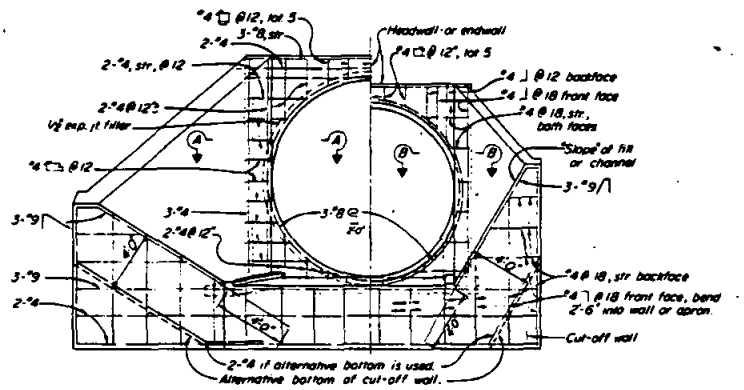

END ELEVATION

If at upstream end, fillet is not shown

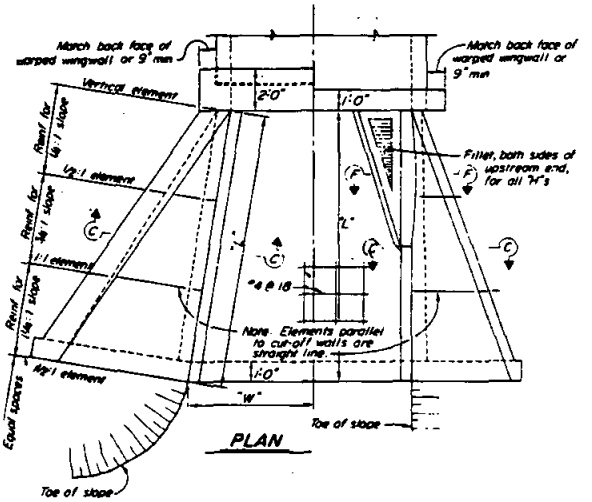

PLAN

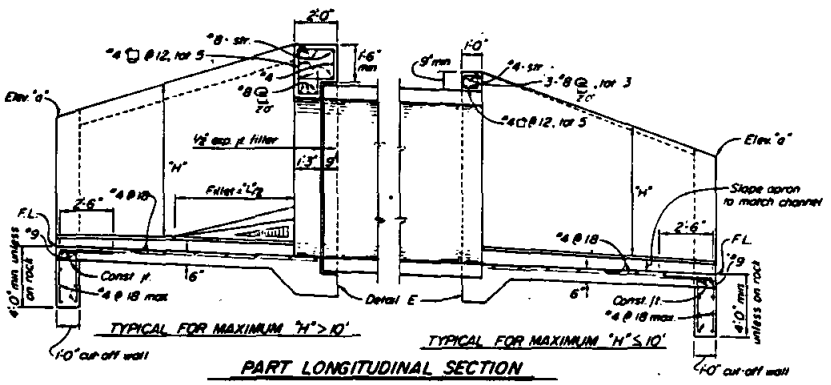

PART LONGITUDINAL SECTION

Note: RCP shown. Metal pipe similar except eliminate the expansion joint and use hook bolts @ 19"± spacing. Size and length provided by manufacturer.

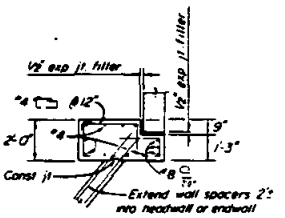

SECTION A-A

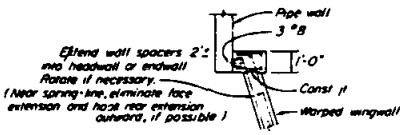

SECTION B-B

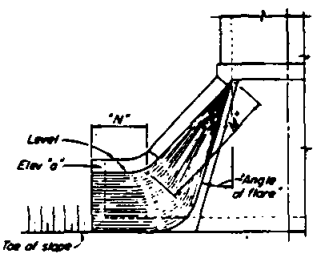

ALTERNATIVE WARPED WINGWALL

Use where additional protection to toe of embankment is required. If at upstream end, fillet is not shown.

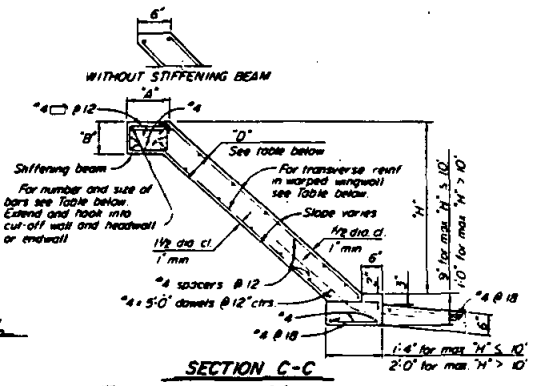

SECTION C-C

Where abrasion is anticipated, increase apron thickness to 7" min to provide 2" min reinforcement coverage

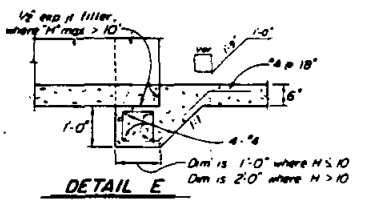

DETAIL E

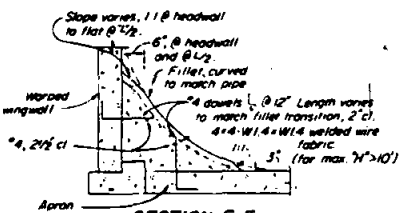

SECTION F-F

WARPED WINGWALLS

Element Slope		WALL DIMENSIONS AND REINFORCING						STIFFENING BEAM DIMENSIONS AND REINFORCING								
	"H"	8' or less	10'	12'	14'	16'	18'	20'	"W" max	12'	14'	16'	18'	20'	25'	30'	35'	40' or more
4½:1	Front face reinf	#4 @ 12	#4 @ 7	#5 @ 7	#5 @ 5	#6 @ 6	#7 @ 7	#7 @ 6	6'	No beam. Place 2-#8 in each face along top of wall								
	Rear face reinf	#4 @ 12	#4 @ 12	#4 @ 12	#4 @ 12	#4 @ 12	#4 @ 12	#4 @ 12	8'									
3¼:1	Front face reinf	#4 @ 12	#4 @ 12	#4 @ 12	#4 @ 12	#4 @ 10	#4 @ 8	#4 @ 6	10'	"A" = 1'-0" "B" = 9" Tot 6'-6"								
	Rear face reinf	#4 @ 12	#4 @ 12	#4 @ 12	#4 @ 10	#4 @ 7	#4 @ 6	#5 @ 8	12'						"A" = 1'-6" "B" = 1'-0" Tot 6'-7"			
1¼:1	Front face reinf	#4 @ 12	#4 @ 12	#4 @ 12	#4 @ 12	#4 @ 12	#4 @ 12	#4 @ 12	14'								"A" = 1'-10" "B" = 1'-0" Tot 6'-8"	
	Rear face reinf	#4 @ 8	#4 @ 8	#4 @ 5	#5 @ 6	#6 @ 7	#6 @ 6	#7 @ 6	16'									"A" = 2'-0" "B" = 1'-6" Tot 8'-9"
"D" at Cut-off Wall		6"	6"	6"	7½"	8"	9½"	11"	18'									
"D" at Headwall / Endwall		6"	6"	6"	8"	9½"	11"	1'-1"	20'									

Notes: Walls designed for 2' surcharge; earth load = 120#/cu ft; equivalent fluid pressure = 36#/cu ft. Vary "D" at warped wall uniformly from that at cut-off wall to that at headwall or endwall, for max "H" > 12'. Dimensions "L", "W", "H", "M", "N", Elev "a", "Angle of flare", and end "Slope" (as apply) are shown on the plans.

RECOMMENDED BY THE SAN DIEGO REGIONAL STANDARDS COMMITTEE

Allan A. Kershaw — Dec. 1975

Coordinator R.C.E. 19607 — Date

DRAWING NUMBER **D-44**

SAN DIEGO REGIONAL STANDARD DRAWING

PIPE CULVERT-HEADWALLS, ENDWALLS & WARPED WINGWALLS

Revision	By	Approved	Date

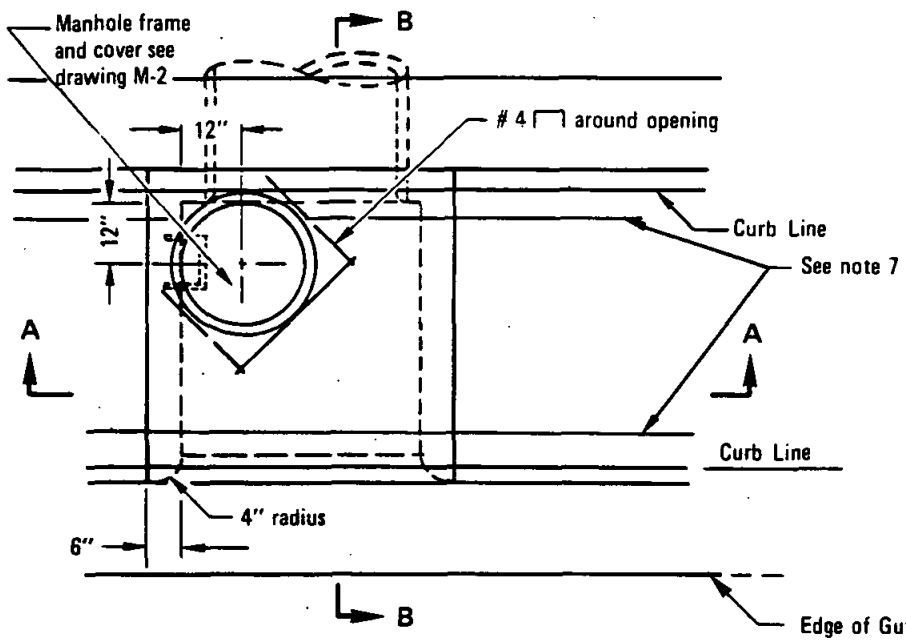

PLAN

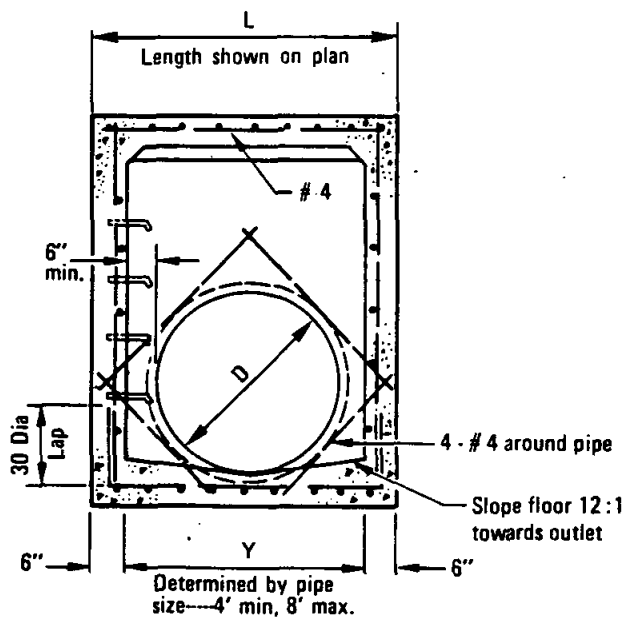

SECTION A–A

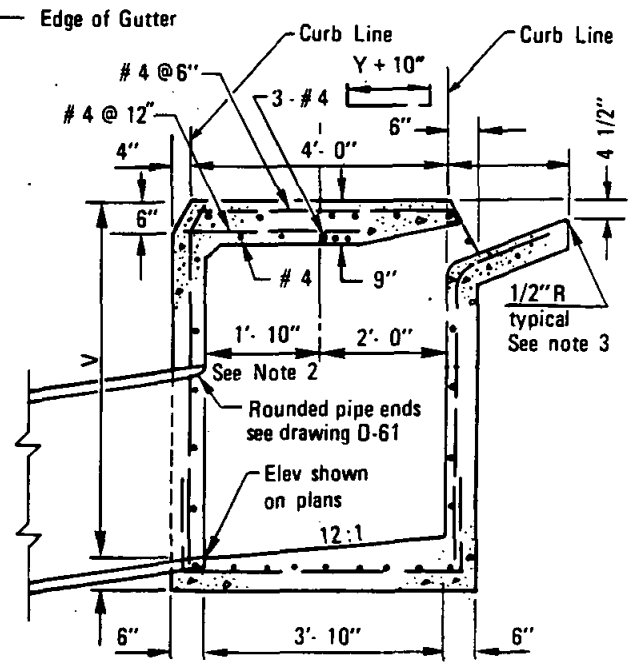

SECTION B–B

NOTES:

1. See Standard Drawings D-11 & D-12 for additional notes and details.
2. Dimension shown becomes 2'-0" when opening on both sides. Adjust manhole as required.
3. Exposed edges of concrete shall be rounded with a radius of 1/2".
4. When V exceeds 4' steps shall be installed. See Standard Drawing D-11 for details.
5. Concrete gutter to match adjacent gutters.
6. An expansion joint shall be placed at the ends of the inlet where the curb is to adjoin.
7. Provide 1/4" tooled groove in top slab in line with back of adjacent curb.
8. Maintain 1 1/2" clear spacing between reinforcing and surface unless otherwise noted.

LEGEND ON PLANS

4' Type J Inlet

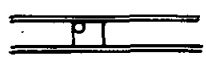

Revision		Approved	Date
Rebar	RC	M.B.	5-86

SAN DIEGO REGIONAL STANDARD DRAWING

CURB INLET-TYPE J MEDIAN

RECOMMENDED BY THE SAN DIEGO REGIONAL STANDARDS COMMITTEE

Harry R. Hecht Oct 1982

Chairman R.C.E. C13768 Date

DRAWING NUMBER D-45

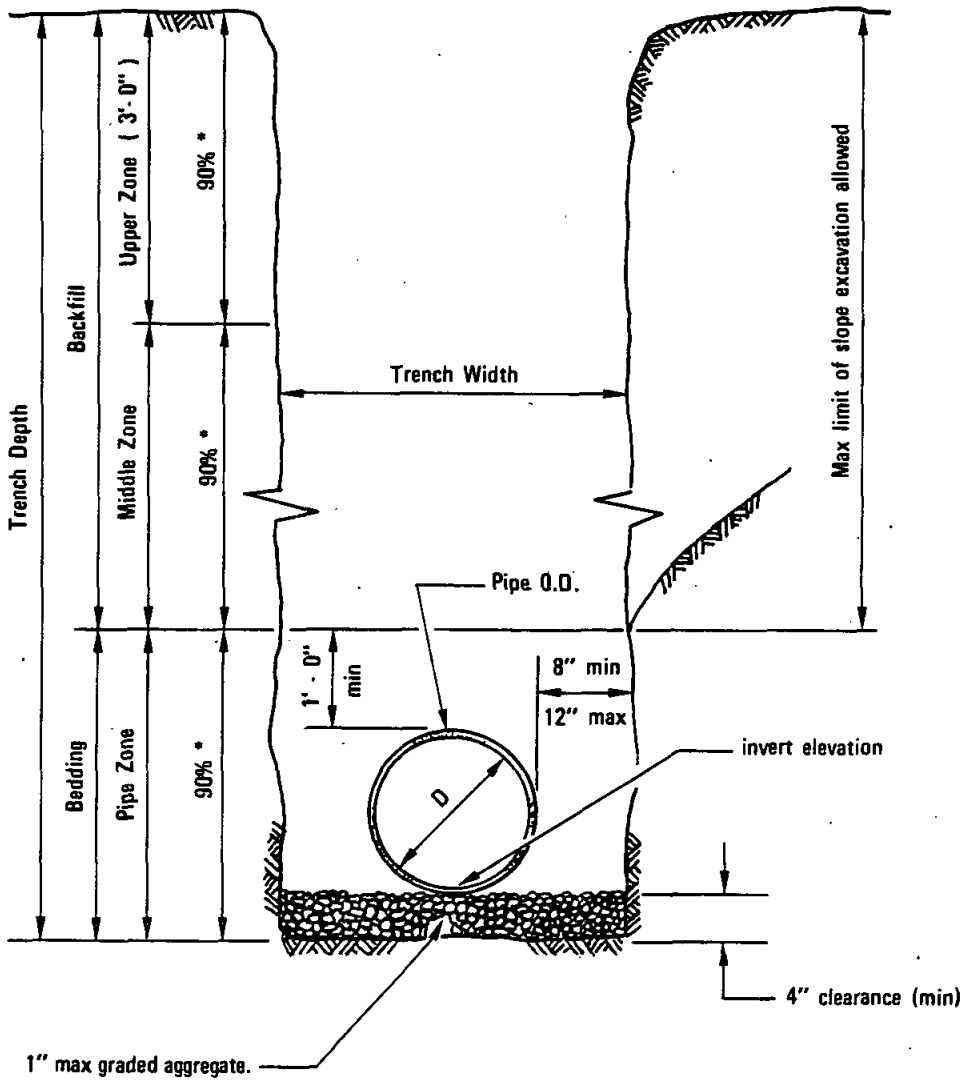

SECTION

NOTES

1. For trenching on improved streets see Standard Drawing G-24 or G-25 for resurfacing details.
2. (*) indicates minimum relative compaction.

RECOMMENDED BY THE SAN DIEGO REGIONAL STANDARDS COMMITTEE Coordinator R.C.E. 19807 — Dec. 1975 Date	SAN DIEGO REGIONAL STANDARD DRAWING	Revision	By	Approved	Date
		Reference	TRP	M.B.	10-82
	PIPE BEDDING AND TRENCH BACKFILL FOR STORM DRAINS	Compac.		M.B.	5-86
DRAWING NUMBER D-60					

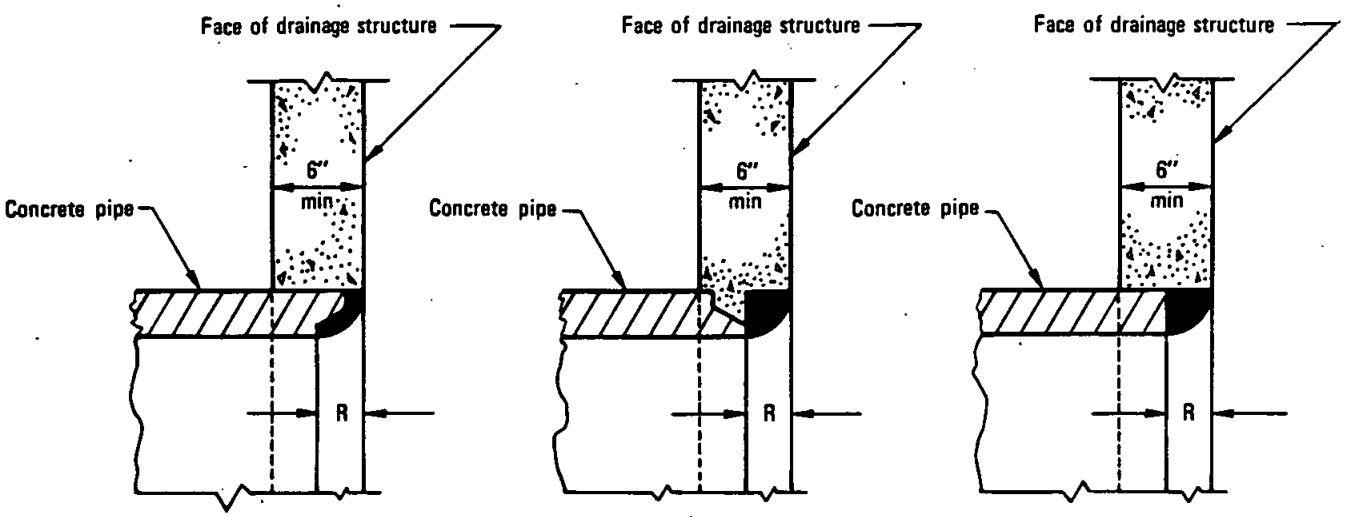

BELL END **SPIGOT END** **CUT END**

R = Thickness of pipe

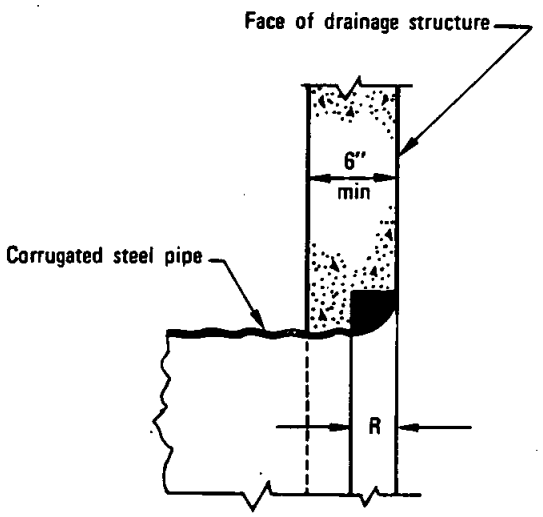

NOTE

The rounded areas may be built up of cement mortar or poured in place with the drainage structure.

$$R = \frac{\text{Inside diameter of pipe}}{10}$$

Revision	By	Approved	Date
Note	JC	O.S.	7-79

SAN DIEGO REGIONAL STANDARD DRAWING

ROUNDED PIPE ENDS IN DRAINAGE STRUCTURES

RECOMMENDED BY THE SAN DIEGO REGIONAL STANDARDS COMMITTEE

Coordinator R.C.E. 19807 — Dec. 1975 Date

DRAWING NUMBER D-61

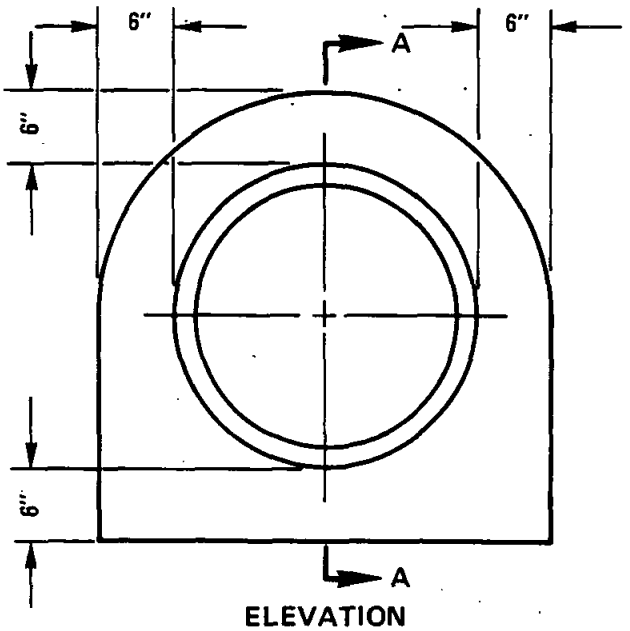

ELEVATION

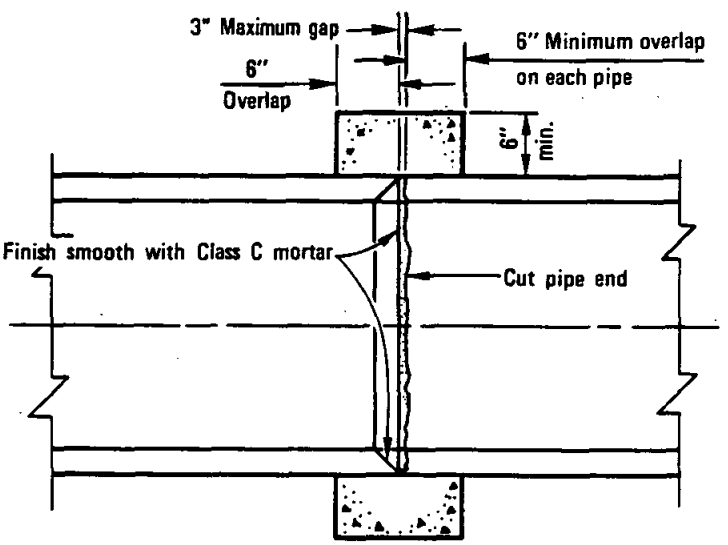

SECTION A–A

NOTES:

1. Pipe collar does not have to be finished if covered.
2. Concrete shall be 560-C-3250.
3. Where gap exceeds 3" but is not more than 6" an internal form shall be used.

LEGEND ON PLANS

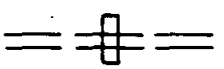

RECOMMENDED BY THE SAN DIEGO REGIONAL STANDARDS COMMITTEE

Allan O Kaufman Dec. 1975
Coordinator R.C.E. 19807 Date

DRAWING NUMBER **D-62**

SAN DIEGO REGIONAL STANDARD DRAWING

PIPE COLLAR

Revision	By	Approved	Date
Conc.	[illegible]	M.B.	5-86
Overlap	[illegible]	A.H.	7-88
Note 3	JP	[illegible]	5-92

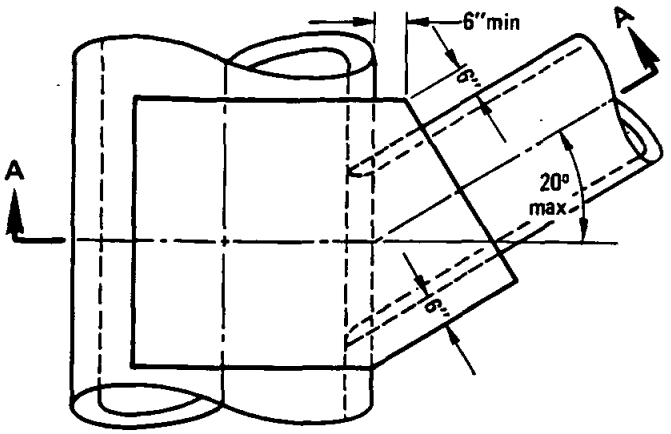

PLAN
SKEWED CONNECTION

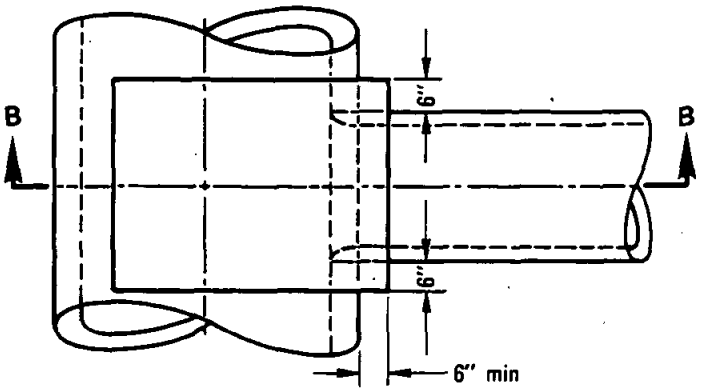

PLAN

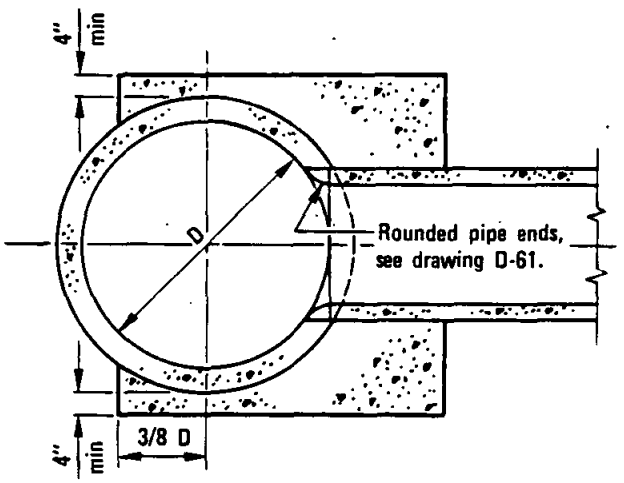

SECTION A–A

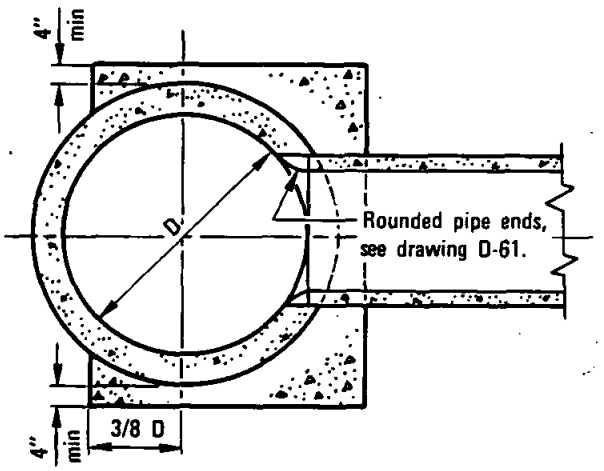

SECTION B–B

NOTES

1. The end of connecting pipe shall not project into the waterway of the larger pipe.
2. The larger pipe shall not be less than 24" I.D.
3. The smaller pipe shall not be more than 2/3 the size of the larger pipe.
4. Concrete shall be 470 - C - 2000.

LEGEND ON PLANS

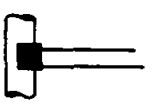

Revision	By	Approved	Date

SAN DIEGO REGIONAL STANDARD DRAWING

CONCRETE LUG

RECOMMENDED BY THE SAN DIEGO REGIONAL STANDARDS COMMITTEE

Allan A. Kershaw — Dec. 1975
Coordinator R.C.E. 19807 — Date

DRAWING NUMBER **D-63**

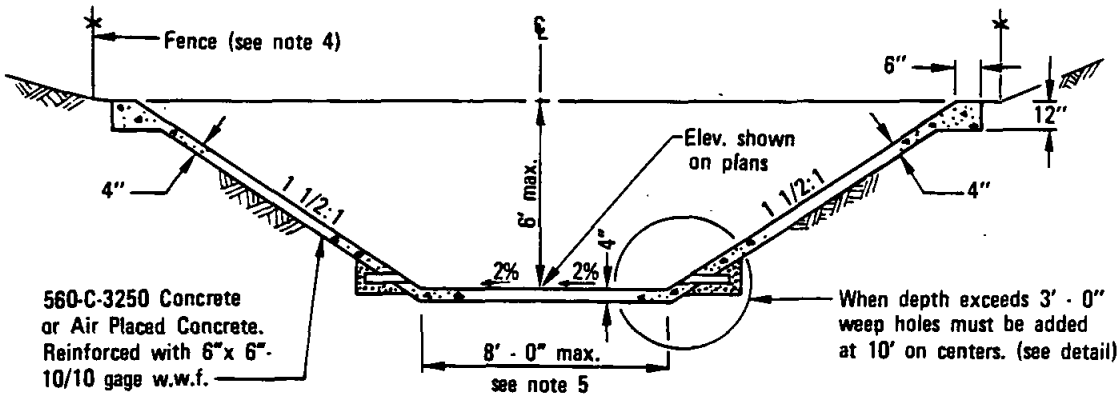

TYPICAL SECTION

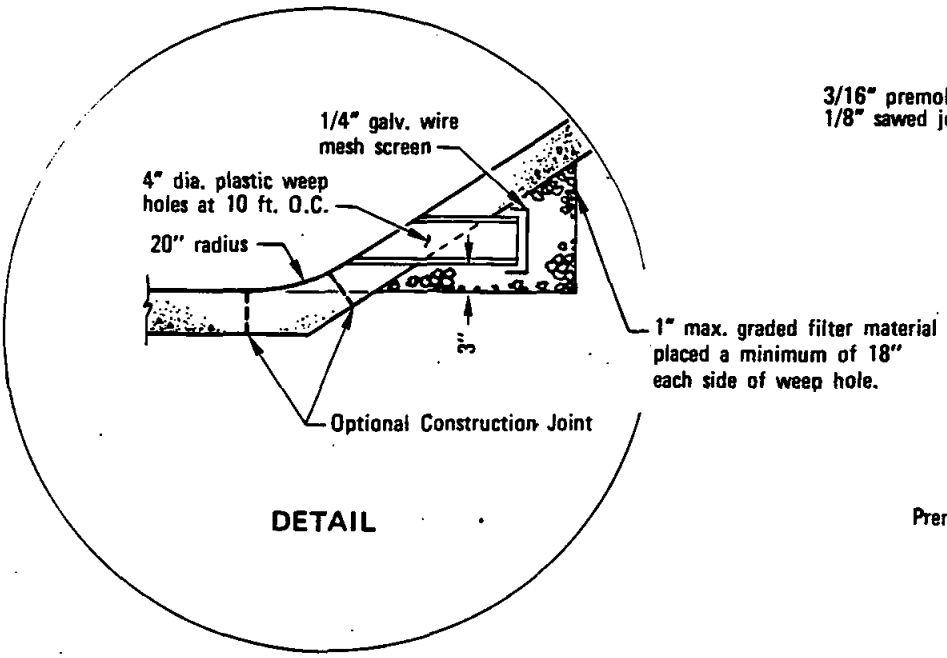

DETAIL

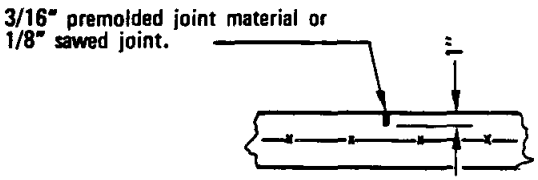

WEAKENED PLANE JOINT

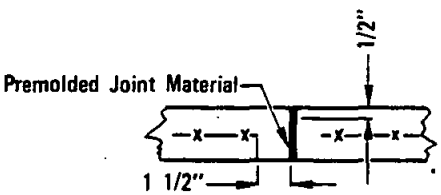

EXPANSION JOINT

NOTES

1. A.C. or clay pipe may be substituted for plastic pipe at weep holes.
2. Weakened plane joints shall be placed every 12' to 15'. Expansion joints shall be placed at all changes of section and at ends of curves.
3. Cutoff walls shall be constructed at each end of the channel along the full width of section. See Standard Drawing D-72.
4. Chainlink fence shall be as required by Agency.
5. For bottom widths greater than 8 feet see Standard Drawing D-71.
6. Reinforcement shown is minimum.

LEGEND ON PLANS

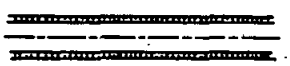

RECOMMENDED BY THE SAN DIEGO REGIONAL STANDARDS COMMITTEE Coordinator R.C.E. 19807 — Dec. 1975 Date	SAN DIEGO REGIONAL STANDARD DRAWING	Revision	By	Approved	Date
		Conc.		M.B.	5-86
DRAWING NUMBER D-70	MINOR DRAINAGE CHANNEL				

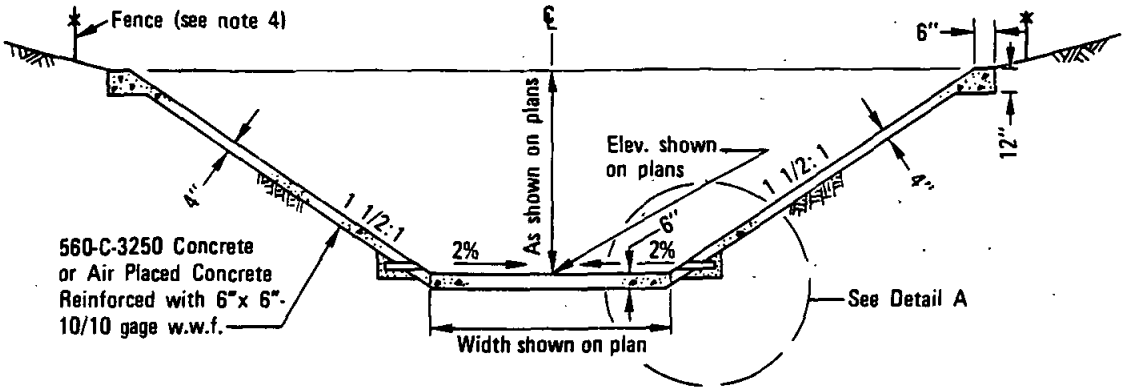

TYPICAL SECTION

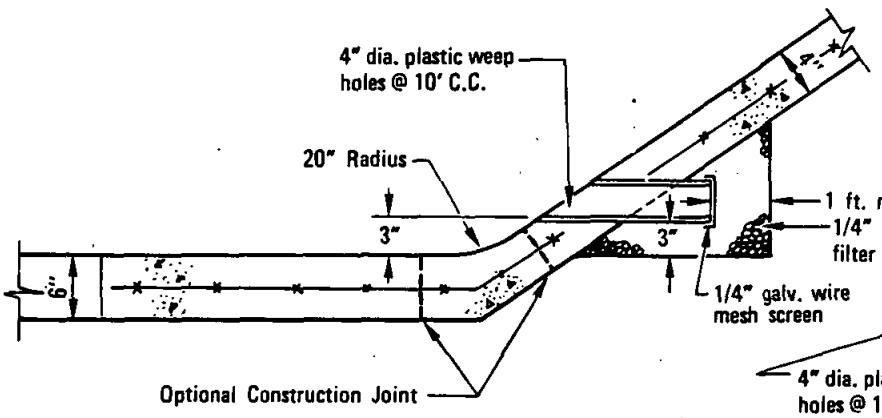

DETAIL A

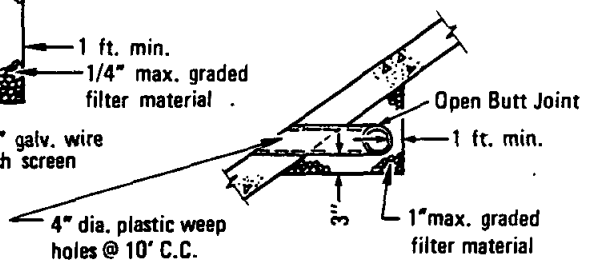

ALT. CONTINUOUS DRAIN

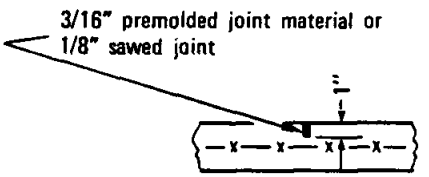

WEAKENED PLANE JOINT

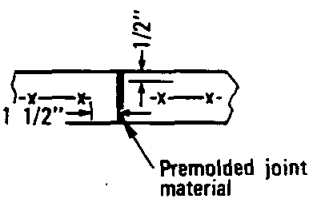

EXPANSION JOINT

NOTES

1. A.C. or clay pipe may be substituted for plastic pipe at weep holes.
2. Weakened plane joints shall be placed every 12' to 15'. Expansion joints shall be placed at all changes of section and at ends of curves.
3. Cutoff walls shall be constructed at each end of the channel along the full width of section. See Standard Drawing D-72.
4. Chainlink fence shall be as required by Agency.
5. Reinforcement shown is minimum.

LEGEND ON PLANS

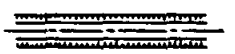

Revision	By	Approved	Date
Conc.		M.B.	5-86

SAN DIEGO REGIONAL STANDARD DRAWING

MAJOR DRAINAGE CHANNEL

RECOMMENDED BY THE SAN DIEGO REGIONAL STANDARDS COMMITTEE

Coordinator R.C.E. 19807 — Dec. 1975 Date

DRAWING NUMBER D-71

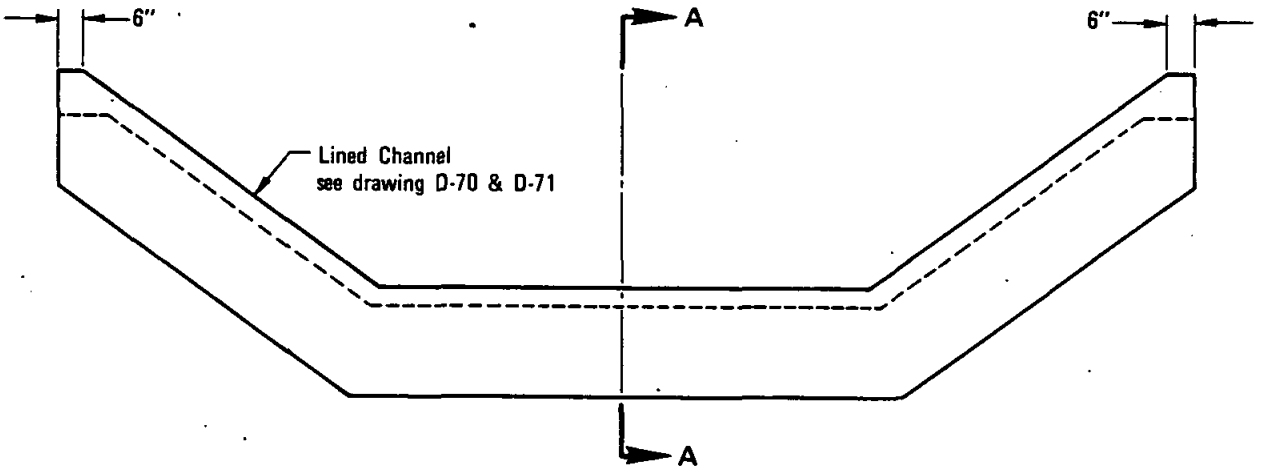

ELEVATION

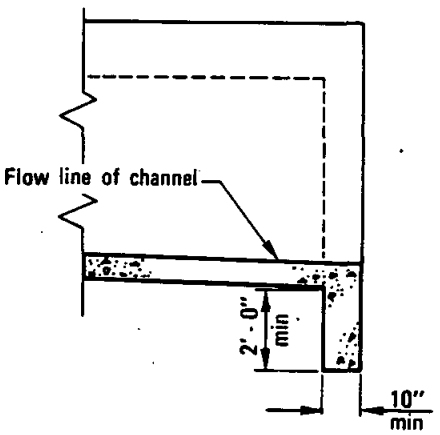

SECTION A–A

NOTES

1. Thickness and wall depth shall be as shown on plan.
2. Reinforcing in cutoff wall shall be the same as that required in channel.
3. Concrete shall be 560-C-3250

LEGEND ON PLANS

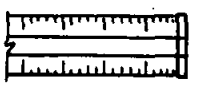

RECOMMENDED BY THE SAN DIEGO REGIONAL STANDARDS COMMITTEE Coordinator R.C.E. 19807 — Dec. 1975 Date	SAN DIEGO REGIONAL STANDARD DRAWING	Revision	By	Approved	Date
		Conc.	RC	M.B.	5-86
DRAWING NUMBER D-72	CUTOFF WALL FOR DRAINAGE CHANNEL				

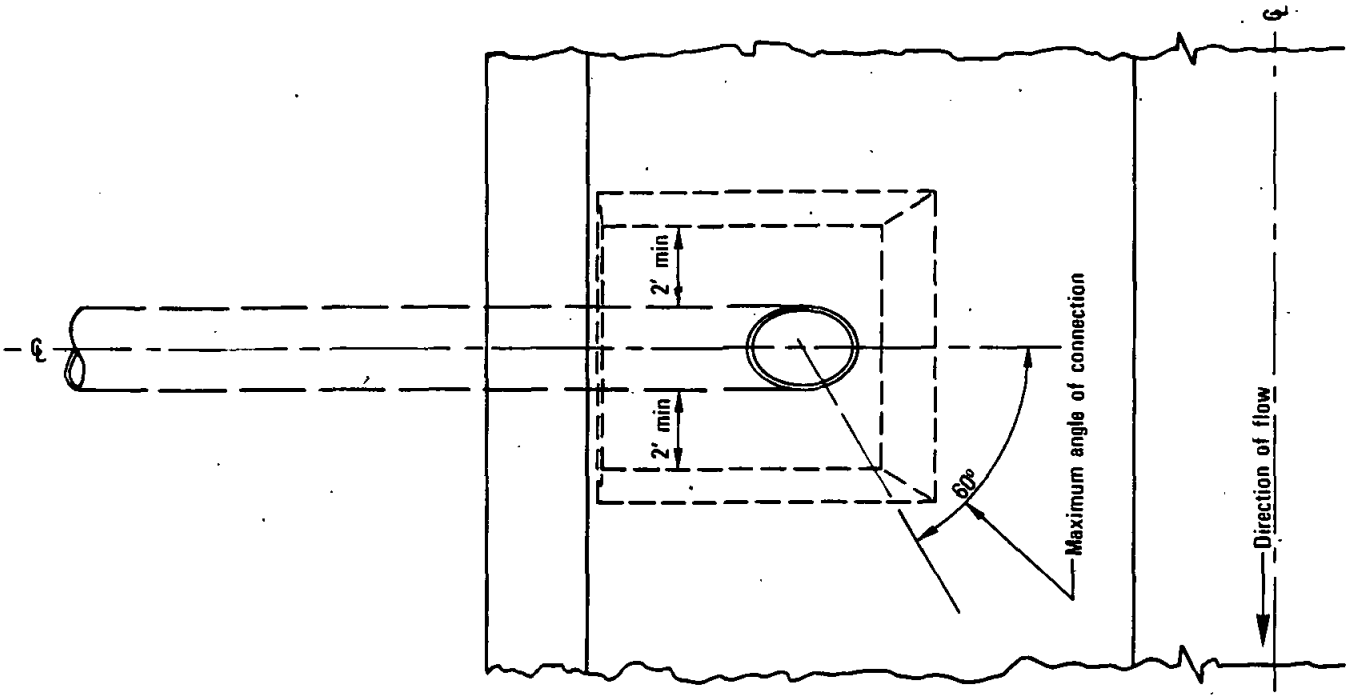

PLAN

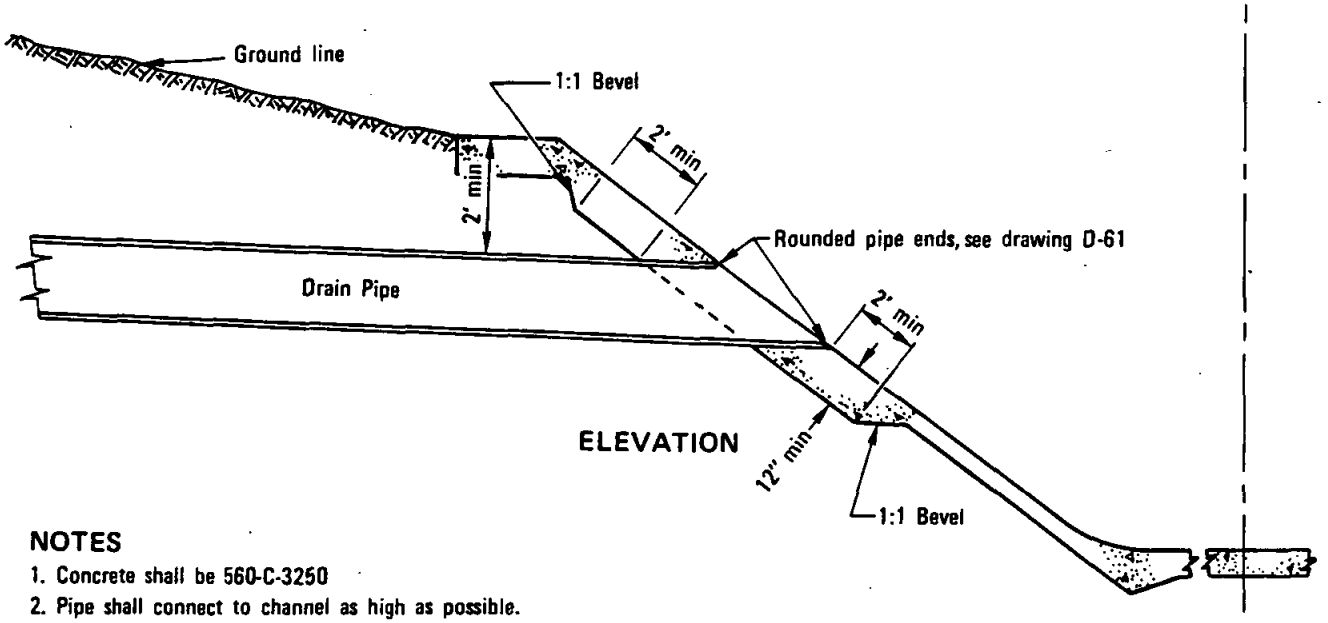

ELEVATION

NOTES

1. Concrete shall be 560-C-3250
2. Pipe shall connect to channel as high as possible.
3. The maximum angle of connection is 60° downstream. In no case shall a pipe angle upstream.

LEGEND ON PLANS

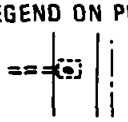

Revision	By	Approved	Date
Conc.	JC	M.B.	5-86

SAN DIEGO REGIONAL STANDARD DRAWING

PIPE TO CHANNEL CONNECTION

RECOMMENDED BY THE SAN DIEGO REGIONAL STANDARDS COMMITTEE

Allan A. Kershaw — Dec. 1975
Coordinator R.C.E. 19807 — Date

DRAWING NUMBER **D-73**

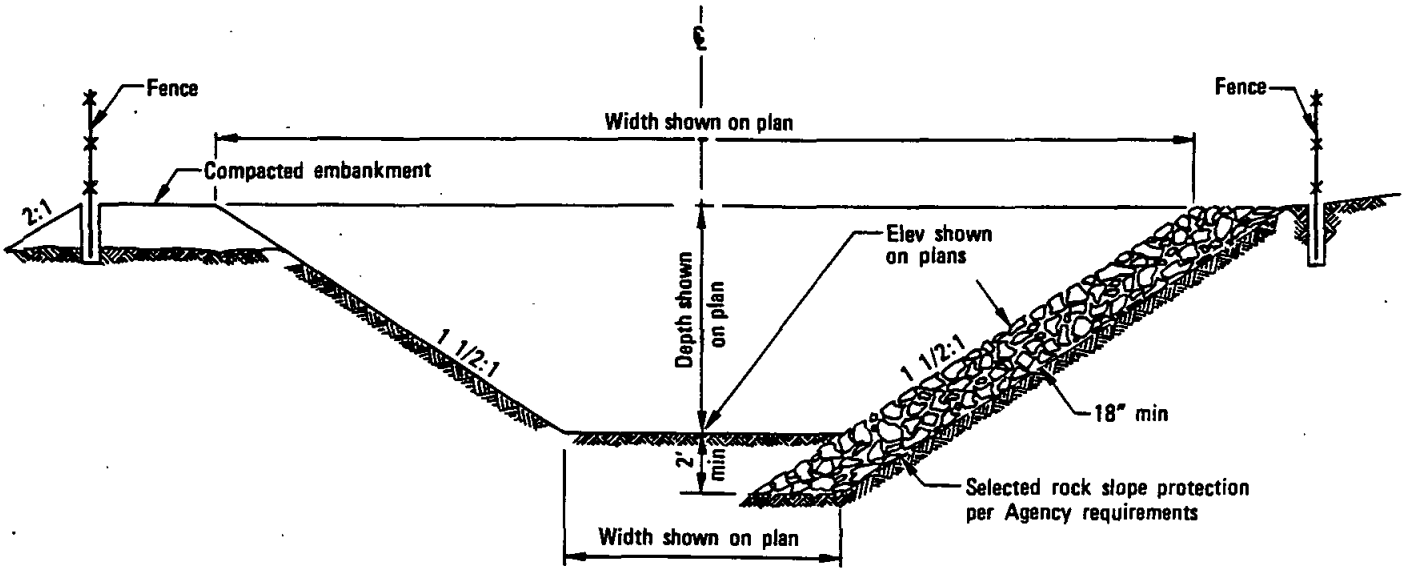

TYPICAL SECTION

NOTE

The following shall be as required by Agency:

a) Low flow channel
b) Filter blanket
c) Cutoff wall
d) Fence

LEGEND ON PLANS

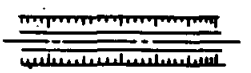

RECOMMENDED BY THE SAN DIEGO REGIONAL STANDARDS COMMITTEE Allan O. Kaufman Dec. 1975 Coordinator R.C.E. 19807 Date	SAN DIEGO REGIONAL STANDARD DRAWING	Revision	By	Approved	Date
DRAWING NUMBER D-74	GRADED EARTH CHANNEL				

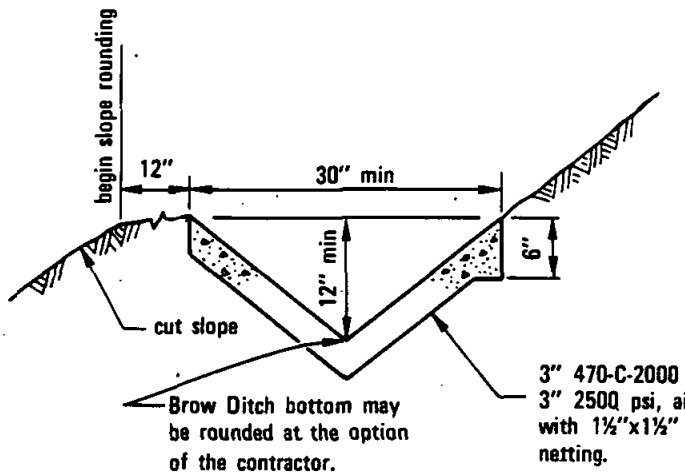

TYPE A

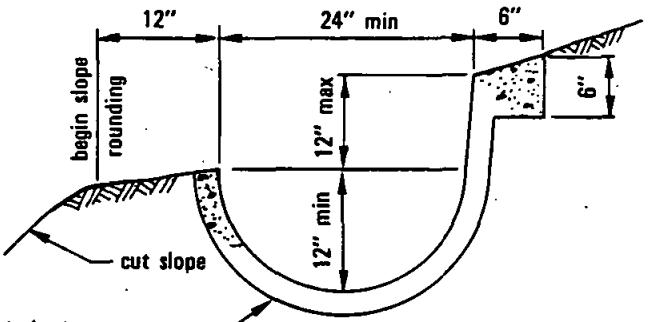

TYPE B

BROW DITCH

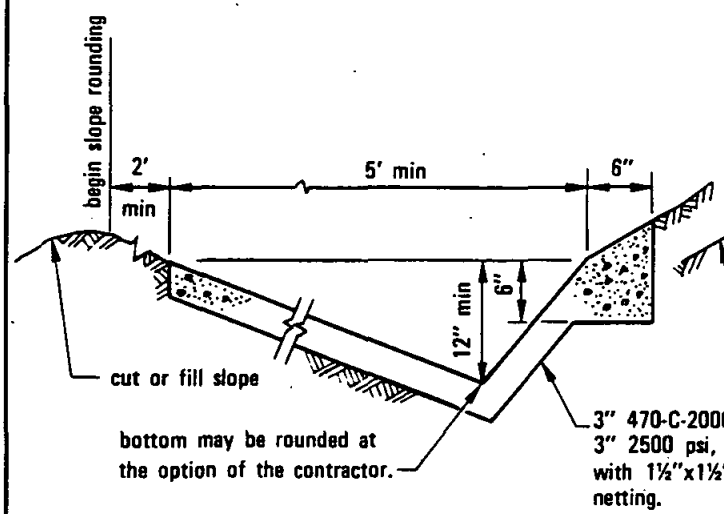

TYPE C

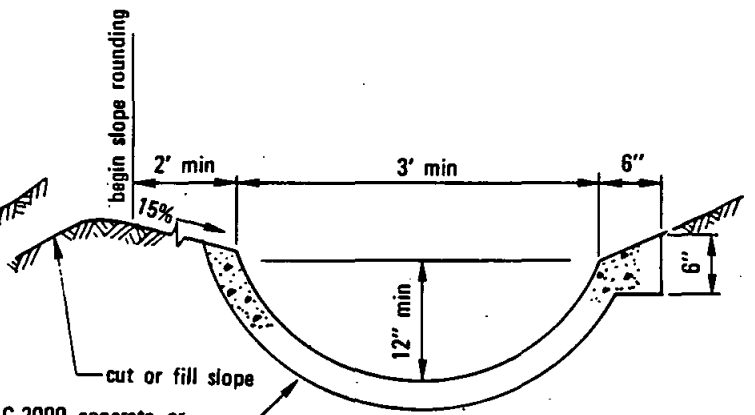

TYPE D

TERRACE DITCH

NOTES

1. Longitudinal slope of lined ditch shall be 2% minimum.
2. Over slope down ditches shall employ 6" thickened edge section at both sides of ditch.

LEGEND ON PLANS

Revision	By	Approved	Date
Ditch type	BC	D.S.	7-79
A.P.C.	TRP	M.B.	10-82
B height	BC	A.H.	7-88

SAN DIEGO REGIONAL STANDARD DRAWING

DRAINAGE DITCHES

RECOMMENDED BY THE SAN DIEGO REGIONAL STANDARDS COMMITTEE

Allan A. Kershaw — Dec. 1975
Coordinator R.C.E. 19807 — Date

DRAWING NUMBER D-75

SPAN	2'		3'		4'					5'								6'														7'				
HEIGHT	1'-6"	2'	2'	3'	2'	3'	4'			2'	3'	4'		5'				2'	3'	4'		5'				6'				7'					
STRENGTH CLASSIFICATION	A	A	A	A	B	A	A	B	C	A	B	A	B	C	D	A	B	C	D	A	B	C	D	A	B	A	B	A	B	C	A	B	C	D	E	A	B	C	D	E
MAX FILL OVER TOP	66		38	38	66	28	28	37	28	37	50	12	27	12	27	11	26	35	46	11	25	35	46	10	18	10	18	10	18	25	9	18	25	36	9	17	25	36	45	9	17	25	36	45
Conc. Top Slab T_1	6	6	6¼	6¼	8	7	7	8	7	8	9	7½	8	7½	8	7½	8	9¼	10¼	7½	8	9½	10½	8¼	8¼	8¼	8¼	8¼	8¼	9¼	8¼	8¼	9¼	11	12	8¼	8¼	9¼	11	12	8¼	8¼	9¼	11	12
Conc. Bottom Slab T_2	6	6	6¼	6¼	8	7	7	8	7	8	9	6	8	6	8	6	8	10	10¾	6	8	10	10¾	6¼	8	6¼	8	6¼	8	9¾	7¼	8¼	10	11¼	12¼	7¼	8¼	10¼	11¼	12¼	7¼	8¼	10¼	11¼	12¼
Conc. Sidewalls T_3	6	6	6	6	6	6	6	6	6	6	6	6	6	6	6	6	6	6	6	6	6	6	6	6	6	6	6	6	6	6	6	6	6	6¼	7	6	6	6¼	7	7¾	6	6	6¼	7	7¾
Steel "a" Size: Bar #	4	4	4	4	5	5	5	5	5	6	6	5	5	5	5	5	5	6	6	5	5	5	5	5	5	5	5	5	5	5	5	5	6	6	7	5	5	6	7	7	5	5	6	7	7
Steel "a" Spacing	3¼	3¼	3¼	3¼	4	5	5	4½	5	4½	5	4	4	4	4	4	5	4½	5	4	4	5	4½	4	4	4	4	4	4	5	4	4	5	4½	5	4	4	5	5¼	5	4	4	5	5¼	5
Steel "a" Length	3-2	3-2	4-2	4-2	4-3	5-3	5-3	5-3	5-3	5-3	5-2	6-3	6-3	6-3	6-3	6-3	6-3	6-2	6-2	6-3	6-3	6-2	6-2	7-3	7-3	7-3	7-3	7-3	7-3	7-3	7-2	7-3	7-3	7-2	7-2	7-3	7-3	7-2	7-3	7-5	7-3	7-3	7-2	7-5	7-6
Steel "d" Dist. Bars Top Slab - No. of	2	2	3	3	2	3	3	3	3	3	3	3	3	3	3	3	3	3	3	3	3	3	3	4	4	4	4	4	4	4	4	4	4	4	4	4	4	4	4	4	4	4	4	4	4
Steel "d" Dist. Bars Bottom Slab - No. of	2	2	2	2	2	3	3	3	3	3	3	3	3	3	3	3	3	3	3	3	3	3	3	4	4	4	4	4	4	4	4	4	4	4	4	4	4	4	4	4	4	4	4	4	4
Steel "e" Bars Spacing	18	18	18	18	12½	18	18	18	17	13	9½	18	18	18	18	18	17	13	11	18	12	8½	6½	18	18	18	18	18	18	17	18	15½	11½	8½	17	10½	7½	6	5	12	7½	7	5	4½
Spacers Number	12	12	12		12	12		14				14				14				16				12		12		14			16					16					18			
Quan. Concrete: C.Y. per lin ft	.17	.18	.23	.27	.31	.29	.33	.36	.36	.40	.43	.32	.37	.36	.41	.40	.44	.51	.54	.43	.48	.55	.57	.40	.42	.43	.46	.47	.50	.58	.52	.54	.60	.66	.56	.58	.65	.71	.78	.59	.61	.70	.78	.88
Quan. Reinf. lbs per lin ft.	27	29	34	36	46	44	45	47	48	52	64	57	56	59	57	61	60	68	75	63	65	77	87	64	63	66	65	69	67	74	70	70	80	91	73	78	92	112	127	81	90	99	126	139

SPAN	7'												8'															10'														
HEIGHT	3'		4'		5'			6'			7'		3'		4'		5'		6'			7'			8'			4'		5'		6'		7'		8'			9'			10'		
STRENGTH CLASSIFICATION	A	B	A	B	A	B	C	A	B	C	A	B	C	A	B	A	B	A	B	A	B	C	A	B	C	A	B	C	A	B	A	B	A	B	A	B	A	B	C	A	B	C	A	B	C
MAX. FILL OVER TOP	16	26	16	26	16	26	35	16	26	35	16	26	35	13	21	13	21	13	21	13	21	31	13	21	31	13	21	31	9	18	9	18	9	18	9	18	8	18	28	8	18	28	8	18	28
Conc. Top Slab T_1	7¼	8¼	7¼	8¼	7¼	8¼	9¾	7¼	8¼	9¾	7¼	8¼	9¾	7¼	8¼	7¼	8¼	7¼	8¼	7¼	8¼	10¼	7¼	8¼	10¼	7¼	8¼	10¼	8	9¼	8¼	9¾	8¼	9¾	8½	9¾	8¼	9¾	12¼	8¼	9¾	12¼	8¼	9¾	12¼
Conc. Bottom Slab T_2	7½	8¾	7½	8¾	7½	8¾	10¼	7½	8¾	10¼	7½	8¾	10¼	7¼	9¼	7¼	9¼	7¼	9¼	7½	9¼	11¼	7½	9¼	11¼	7½	9¼	11¼	8¾	10¼	9	10¾	9	10¾	9¼	11	9¼	11	13¼	9¼	11	13¼	9¼	11	13½
Conc. Sidewalls T_3	6	7	6	7	6	7	8½	6	7	8½	6	7	8½	6½	7½	6½	7½	6½	7½	6½	7½	9¾	6½	7½	9¾	6½	7½	9¾	7¼	9½	7¼	9½	7¼	9½	7¼	9½	7¼	9½	11½	8	9½	11½	9	9½	11½
Steel "a" Size: Bar #	5	5	5	5	5	5	6	5	5	6	5	5	6	5	5	5	5	5	5	5	5	6	5	5	6	5	5	6	6	6	6	6	6	6	6	6	6	6	7	6	6	7	6	6	7
Steel "a" Spacing	9	7	9	7	9	7	9	9	7	9	9	7	9	9	7	9	7	9	7	9	7	8	9	7	8	9	7	8	11	8	11	8	11	8	11	8	11	8	9	11	8	9	11	8	9
Steel "a" Length	6-8	6-9	6-8	6-9	6-8	6-9	6-10	6-8	6-9	6-10	6-8	6-9	6-10	7-7	7-8	7-7	7-8	7-7	7-8	7-7	7-8	7-10	7-7	7-8	7-10	7-7	7-8	7-10	9-5	9-8	9-5	9-8	9-5	9-8	9-5	9-8	9-5	9-8	9-9	9-5	9-8	9-9	9-7	9-8	9-9
Steel "b" Size: Bar #	5	5	5	5	5	5	6	5	5	6	5	5	6	5	5	5	5	5	5	5	5	6	5	5	6	5	5	6	5	6	5	6	5	6	5	6	5	6	6	5	6	6	5	6	6
Steel "b" Spacing	9	7	9	7	9	7	9	9	7	9	9	7	9	9	7	9	7	9	7	9	7	8	9	7	8	9	7	8	11	8	11	8	11	8	11	8	11	8	9	11	8	9	11	8	9
Steel "b" Dimension "X"	1-3	1-4	1-3	1-4	1-3	1-4	1-8	1-3	1-4	1-8	1-3	1-4	1-8	1-6	1-7	1-6	1-7	1-6	1-7	1-6	1-7	1-8	1-6	1-7	1-8	1-6	1-7	1-8	2-0	2-0	2-0	2-0	2-0	2-0	2-0	2-0	2-0	2-0	2-6	2-0	2-0	2-6	2-0	2-0	2-6
Steel "b" Length	3-1	3-2	3-1	3-2	3-1	3-2	3-10	3-1	3-2	3-10	3-1	3-2	3-10	3-4	3-5	3-4	3-5	3-4	3-5	3-4	3-5	3-10	3-4	3-5	3-10	3-4	3-5	3-10	3-10	4-2	3-10	4-2	3-10	4-2	3-10	4-2	3-10	4-2	4-8	3-10	4-2	4-8	3-10	4-2	4-8
Steel "c" Size: Bar #	5	5	5	5	5	5	6	5	5	6	5	5	6	5	5	5	5	5	5	5	5	6	5	5	6	5	5	6	5	6	5	6	5	6	5	6	5	6	6	5	6	6	5	6	6
Steel "c" Spacing	9	7	9	7	9	7	9	9	7	9	9	7	9	9	7	9	7	9	7	9	7	8	9	7	8	9	7	8	11	8	11	8	11	8	11	8	11	8	9	11	8	9	11	8	9
Steel "c" Dimension "Y"	1-10	1-11	1-10	1-11	1-10	1-11	2-3	1-10	1-11	2-3	1-10	1-11	2-3	2-0	2-5	2-0	2-5	2-0	2-5	2-0	2-5	2-8	2-0	2-5	2-8	2-0	2-5	2-8	2-8	3-4	2-8	3-4	2-8	3-4	2-8	3-4	2-8	3-4	3-6	2-8	3-4	3-6	2-8	3-4	3-6
Steel "c" Length	5-2	5-4	6-2	6-4	7-2	7-4	7-10	8-2	8-4	8-10	9-2	9-4	9-10	5-4	5-10	6-4	6-10	7-4	7-10	8-4	8-10	9-3	9-4	9-10	10-3	9-10	10-3	11-3	6-11	7-10	8-1	8-10	9-1	9-10	10-1	10-10	11-1	11-10	12-3	12-1	12-10	13-3	13-1	13-10	14-3
Steel "c_1" Size: Bar #	5	5	5	5	5	5	6	5	5	6	5	5	6	5	5	5	5	5	5	5	5	6	5	5	6	5	5	6	5	6	5	6	5	6	5	6	5	6	6	5	6	6	5	6	6
Steel "c_1" Spacing	9	7	9	7	9	7	9	9	7	9	9	7	9	9	7	9	7	9	7	9	7	8	9	7	8	9	7	8	11	8	11	8	11	8	11	8	11	8	9	11	8	9	11	8	9
Steel "c_1" Dimension "Y"	1-10	1-11	1-10	1-11	1-10	1-11	2-3	1-10	1-11	2-3	1-10	1-11	2-3	2-0	2-5	2-0	2-5	2-0	2-5	2-0	2-5	2-8	2-0	2-5	2-8	2-0	2-5	2-8	2-8	3-4	2-8	3-4	2-8	3-4	2-8	3-4	2-8	3-4	3-6	2-8	3-4	3-6	2-8	3-4	3-6
Steel "c_1" Length	3-8	3-10	3-8	3-10	3-8	3-10	4-6	3-8	3-10	4-6	3-8	3-10	4-6	3-9	4-5	3-9	4-5	3-9	4-5	3-9	4-5	5-0	3-9	4-5	5-0	3-9	4-5	5-0	4-7	5-8	4-7	5-8	4-7	5-8	4-7	5-8	4-7	5-8	6-0	4-7	5-8	6-0	4-7	5-8	6-2
Steel "d" Dist. Bars Top Slab - No of	7	4	7	4	7	4	4	7	4	4	7	4	4	7	5	7	5	7	5	7	5	5	7	5	5	7	5	5	9	5	9	5	9	5	9	5	9	5	5	9	5	5	9	5	5
Steel "d" Dist. Bars Bottom Slab - No of	4	4	4	4	4	4	4	4	4	4	4	4	4	5	5	5	5	5	5	5	5	5	5	5	5	5	5	5	5	5	5	5	5	5	5	5	5	5	5	5	5	5	5	5	5
Steel "e" Bars Spacing	18	18	18	18	18	18	18	18	18	18	18	18	18	18	18	18	18	18	18	18	18	18	18	18	18	18	18	18	18	18	18	18	18	18	18	18	18	18	18	18	18	18	18	18	18
Spacers Total Number	24		28		28			32			36			28		32		32		36			40			40			32		34		36		40		40			44			48		
Quan. Concrete: C.Y. per lin. ft.	.47	.56	.51	.60	.55	.64	.78	.58	.68	.84	.62	.73	.89	.52	.65	.56	.70	.60	.74	.65	.79	.100	.69	.83	.106	.73	.88	.112	.75	.94	.82	.102	.86	.108	.92	.115	.97	.121	.150	.106	.126	.157	.118	.132	.165
Quan. Reinf. lbs per lin. ft	107	130	114	138	118	143	168	125	150	176	132	158	184	118	146	125	154	129	159	136	167	211	143	174	220	147	179	225	143	221	148	228	154	235	160	244	164	250	265	170	259	273	178	267	281

SPAN	12'											
HEIGHT	6'		7'		8'		9'			10'			12'		
STRENGTH CLASSIFICATION	A	B	A	B	A	B	A	B	C	A	B	C	A	B	C
MAX. FILL OVER TOP	5	16	5	16	5	16	5	16	24	5	16	24	5	16	24
Conc. Top Slab T_1	8¾	11¼	8¾	11¼	8¾	11¼	9	11¼	13¼	9	11¼	13¼	9	11¼	13¼
Conc. Bottom Slab T_2	8¾	12¼	8¾	12¼	8¾	12¼	9	12¼	14¾	9	12¼	14¾	9	12¼	14¾
Conc. Sidewalls T_3	7½	10½	7½	10½	7½	10½	8	10½	12½	9	10½	12½	9	10½	12½
Steel "a" Size: Bar #	6	7	6	7	6	7	6	7	7	6	7	7	6	7	7
Steel "a" Spacing	11	10	11	10	11	10	11	10	8	11	10	8	11	10	8
Steel "a" Length	11-3	11-6	11-3	11-6	11-3	11-6	11-4	11-6	11-8	11-5	11-6	11-8	11-5	11-6	11-8
Steel "b" Size: Bar #	6	7	6	7	6	7	6	7	7	6	7	7	6	7	7
Steel "b" Spacing	11	10	11	10	11	10	11	10	8	11	10	8	11	10	8
Steel "b" Dimension "X"	2-8	3-0	2-8	3-0	2-8	3-0	2-8	3-0	3-0	2-8	3-0	3-0	2-8	3-0	3-0
Steel "b" Length	4-10	5-7	4-10	5-7	4-10	5-7	4-10	5-7	5-7	4-10	5-7	5-7	4-10	5-7	5-7
Steel "c" Size: Bar #	6	7	6	7	6	7	6	7	7	6	7	7	6	7	7
Steel "c" Spacing	11	10	11	10	11	10	11	10	8	11	10	8	11	10	8
Steel "c" Dimension "Y"	3-9	3-9	3-9	3-9	3-9	3-9	3-9	3-9	3-9	3-9	3-9	3-9	3-9	3-9	3-9
Steel "c" Length	10-2	10-4	11-2	11-4	12-2	12-4	13-2	13-4	13-6	14-2	14-4	14-6	16-2	16-4	16-6
Steel "c_1" Size: Bar #	6	7	6	7	6	7	6	7	7	6	7	7	6	7	7
Steel "c_1" Spacing	11	10	11	10	11	10	11	10	8	11	10	8	11	10	8
Steel "c_1" Dimension "Y"	3-9	3-9	3-9	3-9	3-9	3-9	3-9	3-9	3-9	3-9	3-9	3-9	3-9	3-9	3-9
Steel "c_1" Length	5-11	6-5	5-11	6-5	5-11	6-6	5-11	6-6	6-8	5-11	6-6	6-8	5-11	6-6	6-8
Steel "d" Dist. Bars Top Slab - No of	10	6	10	6	10	6	10	6	6	10	6	6	10	6	6
Steel "d" Dist. Bars Bottom Slab - No of	6	6	6	6	6	6	6	6	6	6	6	6	6	6	6
Steel "e" Bars Spacing	18	18	18	18	18	18	18	18	18	18	18	18	18	18	18
Spacers Total Number	36		44		44		44			48			52		
Quan. Concrete: C.Y. per lin. ft.	.99	1.38	1.03	1.44	1.08	1.52	1.18	1.58	1.90	1.30	1.65	1.98	1.41	1.78	2.13
Quan. Reinf. lbs per lin ft	203	293	213	304	218	311	223	317	387	231	326	397	243	341	415

Note:

For boxes of height less than that shown in table, use next greater table height slabs, wall dimensions and reinforcing steel, and make necessary changes in bar lengths, number of spacers and quantities.

RECOMMENDED BY THE SAN DIEGO REGIONAL STANDARDS COMMITTEE

Coordinator R.C.E. 19807 Date Dec. 1975

DRAWING NUMBER D-76A

SAN DIEGO REGIONAL STANDARD DRAWING

SINGLE BOX CULVERT DETAILS NO. 1

Revision	By	Approved	Date
Enlarged			8-88

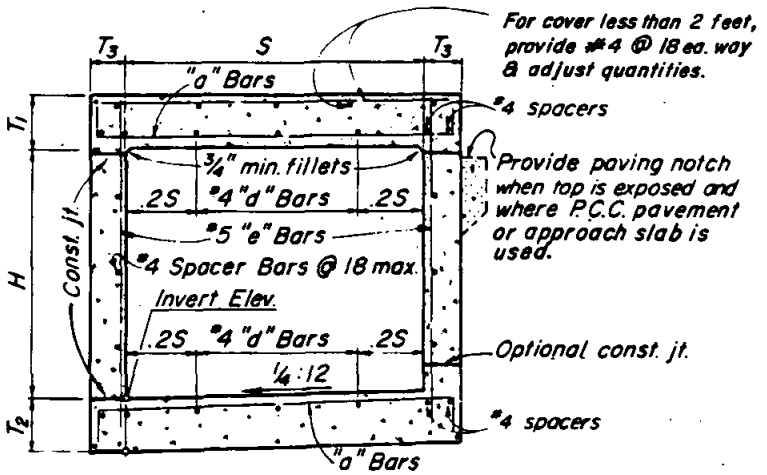

TYPICAL SECTIONS 2' THRU 6' SPANS

DETAIL "A"

⊛ For reinforcement clearance, except at bottom, see "Miscellaneous Details."

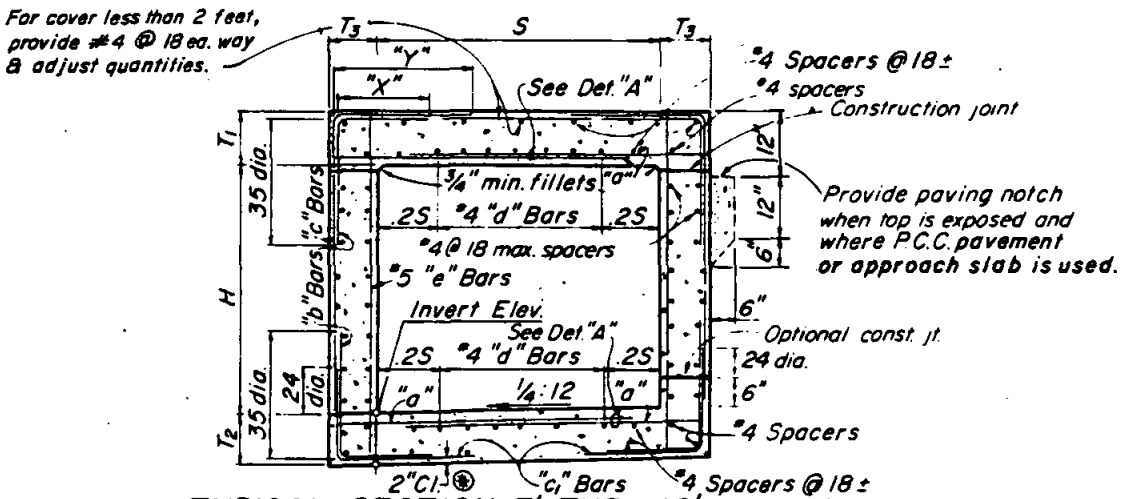

TYPICAL SECTION 7' THRU 12' SPANS

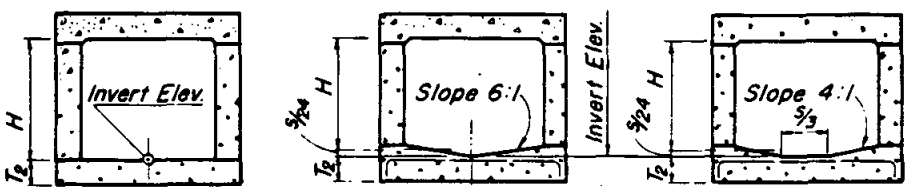

FLAT INVERT V INVERT TRAPEZOIDAL INVERT

ALTERNATIVE INVERTS

(When shown)

Revision	By	Approved	Date
Enlarged	[illegible]	[illegible]	8-88

SAN DIEGO REGIONAL STANDARD DRAWING

SINGLE BOX CULVERT DETAILS NO. 2

RECOMMENDED BY THE SAN DIEGO REGIONAL STANDARDS COMMITTEE

[signature] Dec. 1975

Coordinator R.C.E. 19807 Date

DRAWING NUMBER **D-76B**

SPAN		4'										5'															6'					
HEIGHT		2'			3'				4'			2'			3'			4'				5'				3'			4'		
STRENGTH CLASSIFICATION		A	B	C	A	B	C	D	A	B	C	D	A	B	C	A	B	C	A	B	C	D	A	B	C	D	A	B	C	A	B	C
MAX. FILL OVER TOP		11	21	32	11	23	34	46	11	23	34	46	6	24	36	6	24	36	6	23	34	46	6	23	34	46	4	20	34	4	20	34
Conc.	Top Slab T_1	6½	6½	7¼	6½	6½	7½	8½	6½	6½	7½	8½	6¾	7¾	9¼	6¾	7¾	9¼	6¾	7¾	9	10¼	6¾	7¾	9¼	10¼	7¼	8¼	10½	7¼	8¼	10½
	Bottom Slab T_2	6	7¼	8½	6	7½	8½	9½	6	7½	8½	9½	6½	8¾	10¼	6½	8¾	10¼	6½	8¾	10	11¼	6½	8¾	10¼	11¼	7¼	9½	11½	7¼	9½	11½
	Sidewalls T_3	6	6	6	6	6	6	6	6	6	6	6	6	6	6	6	6	6	6	6	6	6	6	6	6	6	6	6	6	6	6	6
Steel Reinforcing	a Size: Bar #	5	4	4	5	4	4	4	5	4	4	4	5	4	4	5	4	4	5	4	4	4	5	4	4	4	5	4	4	5	4	4
	a Spacing	11	11	9	11	10½	8½	7½	11	10½	8½	7½	10	8½	10	10	8½	10	10	8½	10	9	10	8½	10½	9	9½	11	8½	9½	11	8½
	a Length	10-3	10-2	10-2	10-3	10-2	10-2	10-2	10-3	10-2	10-2	10-2	12-3	12-2	12-2	12-3	12-2	12-2	12-3	12-2	12-2	12-2	12-3	12-2	12-2	12-2	14-3	14-2	14-2	14-3	14-2	14-2
	b or b_1 Size: Bar #	5	5	5	5	5	5	5	5	5	5	5	5	5	6	5	5	6	5	5	6	6	5	5	6	6	5	6	6	5	6	6
	b or b_1 Spacing	11	11	9	11	10½	8½	7½	11	10½	8½	7½	10	8½	10	10	8½	10	10	8½	10	9	10	8½	10½	9	9½	11	8½	9½	11	8½
	b Length "b"	9-4	9-4	9-6	9-4	9-4	9-6	9-7	9-4	9-4	9-6	9-7	11-5	11-6	11-7	11-5	11-6	11-7	11-5	11-6	11-7	11-8	11-5	11-6	11-7	11-8	13-6	13-6	13-8	13-6	13-6	13-8
	b_1 Length "b_1"	9-4	9-5	9-6	9-4	9-5	9-6	9-7	9-4	9-5	9-6	9-7	11-4	11-6	11-7	11-4	11-6	11-7	11-4	11-6	11-7	11-8	11-4	11-6	11-7	11-8	13-5	13-7	13-8	13-5	13-7	13-8
	c Size: Bar #	4	5	5	4	5	5	5	4	5	5	5	4	5	6	4	5	6	4	5	6	6	4	5	6	6	4	6	6	4	6	6
	c Spacing	11	11	9	11	10½	8½	7½	11	10½	8½	7½	10	8½	10	10	8½	10	10	8½	10	9	10	8½	10½	9	9½	11	8½	9½	11	8½
	c Length	4-6	4-6	4-6	4-6	4-6	4-6	4-6	4-6	4-6	4-6	4-6	5-6	5-6	5-6	5-6	5-6	5-6	5-6	5-6	5-6	5-6	5-6	5-6	5-6	5-6	6-6	6-6	6-6	6-6	6-6	6-6
	"d" Dist. Bars Top Slab-Tot. No.	10	6	6	10	6	6	6	10	6	6	6	12	6	6	12	6	6	12	6	6	6	12	6	6	6	12	6	6	12	6	6
	"d" Dist. Bars Bottom Slab-Tot. No.	6	6	6	6	6	6	6	6	6	6	6	6	6	6	6	6	6	6	6	6	6	6	6	6	6	6	6	6	6	6	6
	"e" Bars Size: Bar #	4	4	4	4	4	4	4	4	4	4	5	4	4	4	4	4	4	4	4	4	5	4	4	5	6	4	4	4	4	4	4
	"e" Bars Spacing	18	18	18	18	18	16	12	18	12	9	10	18	18	18	18	18	16	18	12	10	10½	18	8½	9	9	18	18	16	18	14	8½
	Spacers Number	23			26				29				23			26			29				32				30			33		
Quan.	Concrete: C.Y. per lin. ft.	0.47	0.51	0.57	0.53	0.57	0.63	0.69	0.59	0.63	0.69	0.75	0.58	0.69	0.80	0.63	0.75	0.86	0.69	0.80	0.89	0.98	0.74	0.86	0.97	1.04	0.77	0.90	1.08	0.82	0.96	1.13
	Reinf. : Lbs. per lin. ft.	81	74	84	84	79	91	101	87	85	99	111	99	100	109	103	104	112	106	109	119	133	109	116	126	148	121	119	147	125	124	155

SPAN		6'								8'																10'					
HEIGHT		5'				6'				4'			5'			6'			7'				8'				5'			6'		
STRENGTH CLASSIFICATION		A	B	C	D	A	B	C	D	A	B	C	A	B	C	A	B	C	A	B	C	D	A	B	C	D	A	B	C	A	B	C
MAX. FILL OVER TOP		4	19	33	43	4	19	33	43	3	14	25	3	14	25	3	14	25	3	14	25	37	3	14	25	37	2	17	30	2	17	30
Conc	Top Slab T_1	7¼	8¼	10½	12	7¼	8¼	10½	12	8½	9½	12	8½	9½	12	8½	9½	12	8½	9½	12¼	14¼	8½	9½	12¼	14¼	8¾	12¾	16	8¾	12¾	16
	Bottom Slab T_2	7¼	9¼	11½	12¾	7¼	9½	11½	12¾	7½	10½	12¾	7½	10½	12¾	7½	10½	12¾	7½	10½	13	15	7½	10½	13	15¼	8¼	13½	16½	8¼	13½	16½
	Sidewalls T_3	6	6	6	6	6	6	6	7½	6	6	6	6	6	6	6	6	6	7	7	7	8	7	7	8	8½	6	6	6	6	6	6
Steel Reinforcing	a Size: Bar #	5	4	4	4	5	4	4	4	6	4	4	6	4	4	6	4	4	6	4	4	4	6	4	4	4	6	4	4	6	4	4
	a Spacing	9½	11	8½	10½	9½	11	8½	10½	12	9½	10½	12	9½	10	12	9½	10	11½	9½	10	8½	11½	9½	10	8½	11	10	10	11	9½	10
	a Length	14-3	14-2	14-2	14-2	14-3	14-2	14-2	14-8	18-4	18-2	18-2	18-4	18-2	18-2	18-4	18-2	18-2	18-7	18-5	18-5	18-8	18-7	18-5	18-8	18-10	22-4	22-2	22-2	22-4	22-2	22-2
	b or b_1 Size: Bar #	5	6	6	7	5	6	6	7	6	6	7	6	6	7	6	6	7	6	6	7	7	6	6	7	7	6	7	8	6	7	8
	b or b_1 Spacing	9½	11	8½	10½	9½	11	8½	10½	12	9½	10½	12	9½	10	12	9½	10	11½	9½	10	8½	11½	9½	10	8½	11	10	10	11	9½	10
	b Length "b"	13-6	13-6	13-8	13-9	13-6	13-6	13-8	14-2	17-7	17-8	17-9	17-7	17-8	17-9	17-7	17-8	17-9	17-10	17-10	18-0	18-5	17-10	17-10	18-3	18-6	21-7	21-10	22-0	21-7	21-10	22-0
	b_1 Length "b_1"	13-5	13-6	13-8	13-9	13-5	13-6	13-8	14-2	17-5	17-8	17-9	17-5	17-8	17-9	17-5	17-8	17-9	17-8	17-11	18-0	18-5	17-8	17-11	18-0	18-7	21-5	21-10	22-0	21-5	21-10	22-0
	c Size: Bar #	4	6	6	7	4	6	6	7	4	6	7	4	6	7	4	6	7	4	6	7	7	4	6	7	7	6	7	8	6	7	8
	c Spacing	9½	11	8½	10½	9½	11	8½	10½	12	9½	10½	12	9½	10	12	9½	10	11½	9½	10	8½	11½	9½	10	8½	11	10	10	11	9½	10
	c Length	6-6	6-6	6-6	6-6	6-6	6-6	6-6	6-8	8-6	8-6	8-6	8-6	8-6	8-6	8-6	8-6	8-6	8-7	8-7	8-7	8-8	8-7	8-7	8-8	8-9	10-6	10-6	10-6	10-6	10-6	10-6
	"d" Dist. Bars Top Slab-Tot. No	12	6	6	6	12	6	6	6	16	8	8	16	8	8	16	8	8	16	8	8	8	16	8	8	8	18	10	10	18	10	10
	"d" Dist. Bars Bottom Slab-Tot. No	6	6	6	6	6	6	6	6	8	8	8	8	8	8	8	8	8	8	8	8	8	8	8	8	8	10	10	10	10	10	10
	"e" Bars Size: Bar #	4	4	5	5	4	5	6	6	4	4	4	4	4	5	4	5	6	4	5	6	7	4	5	7	7	4	4	5	4	4	5
	"e" Bars Spacing	18	10	9½	7	18	11	9	6	18	18	10½	18	12	10	18	11½	10	14	9½	7½	8½	11½	8½	7½	8	18	10	10	18	6	6½
	Spacers Number	36				36				41			44			44			47			56	50			60	48			48		
Quan.	Concrete: C.Y. per lin. ft.	0.88	1.01	1.19	1.30	0.93	1.07	1.25	1.47	1.08	1.30	1.55	1.14	1.37	1.61	1.19	1.42	1.66	1.32	1.56	1.83	2.14	1.39	1.62	1.99	2.27	1.40	2.05	2.46	1.45	2.07	2.48
	Reinf. : Lbs. per lin. ft.	128	131	164	175	129	137	177	201	169	175	200	172	181	218	173	188	229	185	199	248	299	191	207	284	314	236	254	310	238	274	324

SPAN		10'												12'																			
HEIGHT		7'			8'				10'				6'			7'			8'			9'				10'				12'			
STRENGTH CLASSIFICATION		A	B	C	A	B	C	D	A	B	C	D	A	B	C	A	B	C	A	B	C	A	B	C	D	A	B	C	D	A	B	C	D
MAX. FILL OVER TOP		2	17	30	2	16	29	36	2	16	29	36	2	14	26	2	14	26	2	14	26	2	14	26	36	2	14	26	36	2	14	26	36
Conc	Top Slab T_1	8¾	12¾	16	8¾	12¾	16	17¼	8¾	12¾	16	17½	10	14	17¼	10	14¼	17¼	10¼	14¼	17¾	10¼	14¼	17¾	20¾	10¼	14¼	17¾	20¾	10¼	14½	18¼	21¼
	Bottom Slab T_2	8¼	13¾	16¾	8¾	13½	16½	18¼	8¾	13½	16½	18½	9¼	14¾	18	9¼	15	18¼	9¾	15	18½	10	15¼	18¾	21¼	10¼	15¼	18¾	21½	10½	15¼	19¼	22
	Sidewalls T_3	6	6½	7	7	7	7½	8½	8	8	9	10	6	6	6½	7	7	7	8	8	8½	9	9	9	10	9	9	9½	11	9	10	11	12
Steel Reinforcing	a Size Bar #	6	4	4	6	4	4	6	6	4	4	4	6	4	4	6	4	4	6	4	4	6	4	4	6	4	4	4	6	4	4	4	4
	a Spacing	11	9½	10	11	10	10	9	11	10	10	9	9	11½	9	9	11½	9	9	11	8½	9	11	8½	9	9	11	8½	9	9	11	8½	9
	a Length	22-4	22-4	22-5	22-7	22-5	22-7	22-10	22-10	22-8	22-11	23-2	26-4	26-2	26-4	26-7	26-5	26-5	26-10	26-8	26-10	27-1	26-11	26-11	27-1	27-1	26-11	27-3	27-5	27-1	27-2	27-5	27-8
	b or b_1 Size Bar #	6	7	8	6	7	8	8	6	7	8	8	6	8	8	6	8	8	6	8	8	6	8	8	9	6	8	8	9	6	8	8	9
	b or b_1 Spacing	11	9½	10	11	10	10	9	11	10	10	9	9	11½	9	9	11½	9	9	11	8½	9	11	8½	9	9	11	8½	9	9	11	8½	9
	b Length "b"	21-7	21-11	22-3	21-10	22-1	22-4	22-9	22-1	22-4	22-9	23-1	25-6	25-10	26-3	25-11	26-1	26-4	26-2	26-4	26-9	26-5	26-8	26-10	27-4	26-8	26-8	27-2	27-7	26-5	26-11	27-5	27-10
	b_1 Length "b_1"	21-5	21-11	22-3	21-9	22-0	22-4	22-9	22-0	22-3	22-8	23-2	25-6	25-10	26-3	25-9	26-2	26-4	26-1	26-5	26-9	26-4	26-8	26-11	27-4	26-4	26-8	27-2	27-7	26-4	26-11	27-5	27-11
	c Size: Bar #	6	7	8	6	7	8	8	6	7	8	8	5	8	8	5	8	8	5	8	8	5	8	8	9	5	8	8	9	5	8	8	9
	c Spacing	11	9½	10	11	10	10	9	11	10	10	9	9	11½	9	9	11½	9	9	11	8½	9	11	8½	9	9	11	8½	9	9	11	8½	9
	c Length	10-6	10-7	10-7	10-7	10-7	10-8	10-9	10-8	10-8	10-9	10-10	12-6	12-6	12-7	12-7	12-7	12-7	12-8	12-8	12-9	12-9	12-9	12-9	12-10	12-9	12-9	12-10	12-11	12-9	12-10	12-11	13-0
	"d" Dist. Bars Top Slab-Tot. No	18	10	10	18	10	10	10	18	10	10	10	24	10	10	24	10	10	24	10	10	24	10	10	10	24	10	10	10	24	10	10	10
	"d" Dist. Bars Bottom Slab-Tot. No	10	10	10	10	10	10	10	10	10	10	10	10	10	10	10	10	10	10	10	10	10	10	10	10	10	10	10	10	10	10	10	10
	"e" Bars Size: Bar #	4	4	6	4	5	6	7	4	6	7	4	4	5	4	4	5	4	4	5	4	5	7	8	4	7	8	8	6	7	8	9	9
	"e" Bars Spacing	14	6	8	11	8½	6	6	7½	7	5½	5	18	8	8	15	6	6½	12	5½	6	9	7½	8½	8	8½	11	8½	9	12	8	7	7
	Spacers Number	51			54		64		68				52			55			68			68				72				76			
Quan.	Concrete: C.Y. per lin. ft.	1.51	2.18	2.64	1.68	2.27	2.74	3.04	1.92	2.51	3.05	3.41	1.84	2.59	3.16	1.97	2.77	3.28	2.19	2.93	3.53	2.38	3.15	3.69	4.29	2.46	3.23	3.86	4.49	2.67	3.53	4.30	4.92
	Reinf. : Lbs. per lin. ft.	243	280	339	252	278	355	430	279	327	400	476	309	317	401	318	330	415	336	363	460	345	374	485	578	351	394	519	582	371	427	567	673

Note:

For boxes of height less than that shown in table, use next greater table height slabs, wall dimensions and reinforcing steel and make necessary changes in bar lengths, number of spacers and quantities. Number of "d" bars in table is slab total for both cells.

RECOMMENDED BY THE SAN DIEGO REGIONAL STANDARDS COMMITTEE

Allan A. Kershaw — Dec. 1975

Coordinator R.C.E. 19807 — Date

DRAWING NUMBER **D-77A**

SAN DIEGO REGIONAL STANDARD DRAWING

DOUBLE BOX CULVERT DETAILS NO. 1

Revision	By	Approved	Date
Enlarge		O.K.	9-88

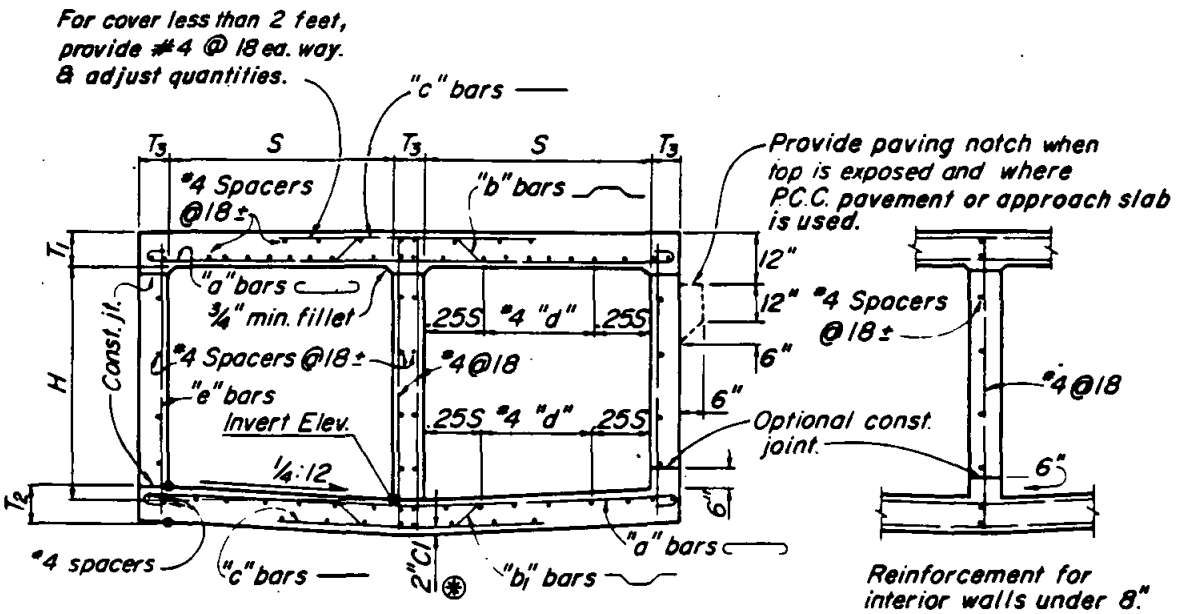

TYPICAL SECTION

(Showing reinforcement for interior walls 8" and over.)

⊛ For reinforcement clearance, except at bottom, see "Miscellaneous Details."

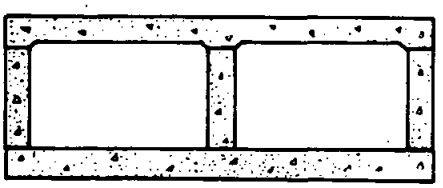

"FLAT INVERT" ALTERNATIVE

(When shown)

Revision	By	Approved	Date
Enlarge	[illegible]	[illegible]	9/88

SAN DIEGO REGIONAL STANDARD DRAWING

DOUBLE BOX CULVERT DETAILS NO. 2

RECOMMENDED BY THE SAN DIEGO REGIONAL STANDARDS COMMITTEE

[illegible] Dec. 1975

Coordinator R.C.E. 19807 Date

DRAWING NUMBER **D-77B**

SPAN	4'								
HEIGHT	2'			3'			4'		
STRENGTH CLASSIFICATION	A	B	C	A	B	C	A	B	C
MAX. FILL OVER TOP	10	24	38	10	24	38	10	24	38
Conc — Top Slab T_1	6¼	6¼	7¼	6¼	6¼	7¼	6¼	6¼	7¼
Conc — Bottom Slab T_2	6	7	8¼	6	7	8¼	6	7	8¼
Conc — Sidewalls T_3	6	6	6	6	6	6	6	6	6
Reinforcing Steel — a — Size Bar #	5	4	5	5	4	5	5	4	5
a — Spacing	11	11½	13	11	11½	13	11	11½	13
a — Length	14-9	14-8	14-9	14-9	14-8	14-9	14-9	14-8	14-9
b or b_1 — Size Bar #	5	5	6	5	5	6	5	5	6
b or b_1 — Spacing	11	11½	13	11	11½	13	11	11½	13
Length "b"	14-2	14-2	14-3	14-2	14-2	14-3	14-2	14-2	14-3
Length "b_1"	14-0	14-2	14-3	14-0	14-2	14-3	14-0	14-2	14-3
c — Size Bar #	4	5	6	4	5	6	4	5	6
c — Spacing	11	11½	13	11	11½	13	11	11½	13
c — Length	9-0	9-0	9-0	9-0	9-0	9-0	9-0	9-0	9-0
"d" Dist. Bars — Top Slab-Tot No	15	9	9	15	9	9	15	9	9
"d" Dist. Bars — Bottom Slab-Tot. No	9	9	9	9	9	9	9	9	9
"e" Bars — Size Bar #	4	4	4	4	4	4	4	4	5
"e" Bars — Spacing	18	18	18	18	18	13	18	11½	13
Spacers — Number	34			38			42		
Quan — Concrete: CY per lin ft	0.67	0.71	0.81	0.75	0.79	0.89	0.82	0.86	0.96
Quan — Reinf Lbs per lin. ft	122	110	133	127	115	138	131	122	147

SPAN	5'													
HEIGHT	2'			3'			4'				5'			
STRENGTH CLASSIFICATION	A	B	C	A	B	C	A	B	C	D	A	B	C	D
MAX. FILL OVER TOP	8	17	26	8	17	26	8	17	26	35	8	17	26	35
Conc — Top Slab T_1	6¾	6¾	7½	6¾	6¾	7½	6¾	6¾	7½	8½	6¾	6¾	7½	8½
Conc — Bottom Slab T_2	6¼	7¼	8½	6¼	7¼	8½	6¼	7¼	8½	9½	6¼	7½	8½	9½
Conc — Sidewalls T_3	6	6	6	6	6	6	6	6	6	6	6	6	6	6
Reinforcing Steel — a — Size Bar #	5	4	5	5	4	5	5	4	5	5	5	4	5	5
a — Spacing	10	11½	13	10	11½	13	10	11	13	11½	10	11	13	11½
a — Length	17-9	17-8	17-9	17-9	17-8	17-9	17-9	17-8	17-9	17-9	17-9	17-8	17-9	17-9
b or b_1 — Size Bar #	5	5	6	5	5	6	5	5	6	6	5	5	6	6
b or b_1 — Spacing	10	11½	13	10	11½	13	10	11	13	11½	10	11	13	11½
Length "b"	17-3	17-3	17-3	17-3	17-3	17-3	17-3	17-3	17-3	17-5	17-3	17-3	17-3	17-5
Length "b_1"	17-0	17-2	17-4	17-0	17-2	17-4	17-0	17-2	17-4	17-5	17-0	17-2	17-4	17-5
c — Size Bar #	4	5	6	4	5	6	4	5	6	6	4	5	6	6
c — Spacing	10	11½	13	10	11½	13	10	11	13	11½	10	11	13	11½
c — Length	11-0	11-0	11-0	11-0	11-0	11-0	11-0	11-0	11-0	11-0	11-0	11-0	11-0	11-0
"d" Dist. Bars — Top Slab-Tot No	18	9	9	18	9	9	18	9	9	9	18	9	9	9
"d" Dist. Bars — Bottom Slab-Tot. No	9	9	9	9	9	9	9	9	9	9	9	9	9	9
"e" Bars — Size Bar #	4	4	4	4	4	4	4	4	4	5	4	4	4	6
"e" Bars — Spacing	18	18	18	18	18	18	18	17	11½	11½	18	11	7	11½
Spacers — Number	34			38			38				42			
Quan — Concrete: CY per lin ft	0.82	0.87	0.98	0.90	0.95	1.05	0.97	1.02	1.13	1.23	1.04	1.11	1.20	1.31
Quan — Reinf Lbs per lin. ft	150	126	153	155	130	157	157	136	161	181	161	143	171	192

SPAN	6'									
HEIGHT	3'			4'			5'			
STRENGTH CLASSIFICATION	A	B	C	A	B	C	A	B	C	D
MAX. FILL OVER TOP	3	13	23	3	13	23	3	13	23	30
Conc — Top Slab T_1	7½	7½	8¼	7½	7½	8¼	7½	7½	8¼	9¼
Conc — Bottom Slab T_2	6	7¾	9¼	6	7¾	9¼	6	8	9¼	10
Conc — Sidewalls T_3	6	6	6	6	6	6	6	6	6	6
Reinforcing Steel — a — Size Bar #	6	5	5	6	5	5	6	5	5	5
a — Spacing	13	14	11½	13	14	11½	13	14	11½	10
a — Length	20-10	20-9	20-9	20-10	20-9	20-9	20-10	20-9	20-9	20-9
b or b_1 — Size Bar #	6	6	6	6	6	6	6	6	6	6
b or b_1 — Spacing	13	14	11½	13	14	11½	13	14	11½	10
Length "b"	20-3	20-3	20-5	20-3	20-3	20-5	20-3	20-3	20-5	20-6
Length "b_1"	20-0	20-2	20-5	20-0	20-2	20-5	20-0	20-3	20-5	20-6
c — Size Bar #	4	6	6	4	6	6	4	6	6	6
c — Spacing	13	14	11½	13	14	11½	13	14	11½	10
c — Length	13-0	13-0	13-0	13-0	13-0	13-0	13-0	13-0	13-0	13-0
"d" Dist. Bars — Top Slab-Tot No	18	9	9	18	9	9	18	9	9	9
"d" Dist. Bars — Bottom Slab-Tot. No	9	9	9	9	9	9	9	9	9	9
"e" Bars — Size Bar #	4	4	4	4	4	4	4	4	5	5
"e" Bars — Spacing	18	18	18	18	18	11½	18	11½	12	10
Spacers — Number	40			40			52			
Quan — Concrete: CY per lin ft	1.05	1.15	1.29	1.12	1.23	1.37	1.19	1.32	1.44	1.55
Quan — Reinf Lbs per lin. ft	181	168	196	183	170	200	187	177	209	235

SPAN	6'			
HEIGHT	6'			
STRENGTH CLASSIFICATION	A	B	C	D
MAX. FILL OVER TOP	3	13	23	30
Conc — Top Slab T_1	7½	7½	8¼	9¼
Conc — Bottom Slab T_2	6	8	9¼	10¼
Conc — Sidewalls T_3	6	6	6	6
Reinforcing Steel — a — Size Bar #	6	5	5	5
a — Spacing	13	14	11½	10
a — Length	20-10	20-9	20-9	20-9
b or b_1 — Size Bar #	6	6	6	6
b or b_1 — Spacing	13	14	11½	10
Length "b"	20-3	20-3	20-5	20-6
Length "b_1"	20-0	20-0	20-5	20-7
c — Size Bar #	4	6	6	6
c — Spacing	13	14	11½	10
c — Length	13-0	13-0	13-0	13-0
"d" Dist. Bars — Top Slab-Tot. No	18	9	9	9
"d" Dist. Bars — Bottom Slab-Tot. No	9	9	9	9
"e" Bars — Size Bar #	4	4	6	6
"e" Bars — Spacing	18	8	12	10
Spacers — Number	48			
Quan — Concrete: CY per lin ft	1.27	1.39	1.52	1.64
Quan — Reinf Lbs per lin. ft	192	187	221	249

SPAN	8'																
HEIGHT	4'			5'			6'			7'				8'			
STRENGTH CLASSIFICATION	A	B	C	A	B	C	A	B	C	A	B	C	D	A	B	C	D
MAX. FILL OVER TOP	2	11	20	2	11	20	2	11	20	2	11	20	28	2	11	20	28
Conc — Top Slab T_1	8¼	8¼	10¼	8¼	8¼	10¼	8¼	8¼	10¼	8¼	8¼	10¼	11½	8¼	8¼	10¼	11½
Conc — Bottom Slab T_2	6½	9	11	6½	9¼	11	6½	9¼	11	6¾	9¼	11	12¼	6¾	9¼	11	12¼
Conc — Sidewalls T_3	6	6	6	6	6	6	6	6	6	6	6	6½	6½	7	7	7½	8½
Reinforcing Steel — a — Size Bar #	6	5	5	6	5	5	6	5	5	6	5	5	6	6	5	5	6
a — Spacing	11½	12	12	11½	12	12	11½	12	12	11½	12	12	10½	11½	11½	12	10½
a — Length	26-10	26-9	26-9	26-10	26-9	26-9	26-10	26-9	26-9	26-10	26-9	26-11	27-4	27-2	27-1	27-3	27-8
b or b_1 — Size Bar #	6	6	7	6	6	7	6	6	7	6	6	7	7	6	6	7	7
b or b_1 — Spacing	11½	12	12	11½	12	12	11½	12	12	11½	12	12	10½	11½	11½	12	10½
Length "b"	26-5	26-5	26-7	26-5	26-5	26-7	26-5	26-5	26-7	26-5	26-5	26-9	27-3	26-9	26-9	27-1	27-7
Length "b_1"	26-0	26-4	26-7	26-0	26-5	26-7	26-0	26-5	26-7	26-1	26-5	26-9	27-3	26-5	26-9	27-1	27-7
c — Size Bar #	4	6	7	4	6	7	4	6	7	4	6	7	7	4	6	7	7
c — Spacing	11½	12	12	11½	12	12	11½	12	12	11½	12	12	10½	11½	11½	12	10½
c — Length	17-0	17-0	17-0	17-0	17-0	17-0	17-0	17-0	17-0	17-0	17-0	17-1	17-3	17-2	17-2	17-3	17-5
"d" Dist. Bars — Top Slab-Tot. No	24	12	12	24	12	12	24	12	12	24	12	12	12	24	12	12	12
"d" Dist. Bars — Bottom Slab-Tot. No	12	12	12	12	12	12	12	12	12	12	12	12	12	12	12	12	12
"e" Bars — Size Bar #	4	4	4	4	4	5	4	5	6	4	6	7	7	4	6	7	7
"e" Bars — Spacing	18	18	12	18	12	12	18	12	12	11½	12	12	10½	11½	11½	12	10½
Spacers — Number	58			62			62			66				70			88
Quan — Concrete: CY per lin ft	1.47	1.67	1.99	1.54	1.76	2.06	1.62	1.84	2.14	1.71	1.91	2.26	2.57	1.90	2.10	2.46	2.79
Quan — Reinf Lbs per lin. ft	261	250	301	266	257	310	267	264	320	276	277	336	409	283	295	347	441

SPAN	10'								
HEIGHT	5'			6'			7'		
STRENGTH CLASSIFICATION	A	B	C	A	B	C	A	B	C
MAX. FILL OVER TOP	2	11	20	2	11	20	2	11	20
Conc — Top Slab T_1	9	10	12	9	10	12	9	10	12
Conc — Bottom Slab T_2	7½	10¾	13	7½	10¾	13	7½	10¾	13
Conc — Sidewalls T_3	6	6	6	6	6	6	6	6	6½
Reinforcing Steel — a — Size Bar #	6	6	6	6	6	6	6	6	6
a — Spacing	10½	13	10	10½	13	10	10½	13	10
a — Length	32-10	32-10	32-10	32-10	32-10	32-10	32-10	32-10	33-0
b or b_1 — Size Bar #	6	7	7	6	7	7	6	7	7
b or b_1 — Spacing	10½	13	10	10½	13	10	10½	13	10
Length "b"	32-6	32-7	32-10	32-6	32-7	32-10	32-6	32-7	33-0
Length "b_1"	32-2	32-7	32-11	32-2	32-7	32-11	32-2	32-7	33-1
c — Size Bar #	5	7	7	5	7	7	5	7	7
c — Spacing	10½	13	10	10½	13	10	10½	13	10
c — Length	21-0	21-0	21-0	21-0	21-0	21-0	21-0	21-0	21-1
"d" Dist. Bars — Top Slab-Tot. No	27	15	15	27	15	15	27	15	15
"d" Dist. Bars — Bottom Slab-Tot. No	15	15	15	15	15	15	15	15	15
"e" Bars — Size Bar #	4	4	5	4	5	6	4	6	7
"e" Bars — Spacing	18	13	10	18	13	10	13	13	10
Spacers — Number	68			68			72		
Quan — Concrete: CY per lin ft	1.98	2.40	2.82	2.06	2.48	2.90	2.13	2.55	3.03
Quan — Reinf Lbs per lin. ft	358	372	470	359	379	482	367	391	502

SPAN	10'							
HEIGHT	8'				10'			
STRENGTH CLASSIFICATION	A	B	C	D	A	B	C	D
MAX. FILL OVER TOP	2	11	20	28	2	11	20	28
Conc — Top Slab T_1	9	10	12	14¼	9	10¼	12½	14¼
Conc — Bottom Slab T_2	7¾	11	13	15	8	11	13½	15
Conc — Sidewalls T_3	7	7	7½	8½	8	8½	9	10
Reinforcing Steel — a — Size Bar #	6	6	6	7	6	6	6	7
a — Spacing	10½	13	10	11	10½	13	10	11
a — Length	33-2	33-2	33-4	33-8	33-6	33-8	33-10	34-2
b or b_1 — Size Bar #	6	7	7	8	6	7	7	8
b or b_1 — Spacing	10½	13	10	11	10½	13	10	11
Length "b"	32-10	32-11	33-4	33-1	33-2	33-5	33-11	34-5
Length "b_1"	32-6	32-11	33-5	33-11	32-11	33-5	33-11	34-5
c — Size Bar #	5	7	7	8	5	7	7	8
c — Spacing	10½	13	10	11	10½	13	10	11
c — Length	21-2	21-2	21-3	21-5	21-4	21-5	21-6	21-8
"d" Dist. Bars — Top Slab-Tot No	27	15	15	15	27	15	15	15
"d" Dist. Bars — Bottom Slab-Tot No	15	15	15	15	15	15	15	15
"e" Bars — Size Bar #	4	6	7	8	5	6	8	8
"e" Bars — Spacing	10½	12	10	11	10½	9	10	9
Spacers — Number	76			94	102			
Quan — Concrete CY per lin ft	2.34	2.77	3.23	3.78	2.68	3.18	3.73	4.22
Quan — Reinf Lbs per lin ft	377	402	514	590	421	453	577	632

SPAN	12'																				
HEIGHT	6'			7'			8'			9'				10'				12'			
STRENGTH CLASSIFICATION	A	B	C	A	B	C	A	B	C	A	B	C	D	A	B	C	D	A	B	C	D
MAX. FILL OVER TOP	2	10	18	2	10	18	2	10	18	2	11	20	30	2	11	20	30	2	11	20	30
Conc — Top Slab T_1	10¼	11½	14	10¼	11½	14	10¼	11½	14	10¼	12	14¾	17¾	10¼	12	14¾	17¾	10¼	12	14¾	17¾
Conc — Bottom Slab T_2	8¼	12	14½	8½	12	14¾	8½	12	14¾	8¾	12½	15½	18¼	8¾	12½	15½	18¼	9	12¾	15¾	18¼
Conc — Sidewalls T_3	6	6	6½	6	6	7	7	7	7½	8	8	9	10	8	8	9	10½	9	9	10½	12
Reinforcing Steel — a — Size Bar #	7	6	7	7	6	7	7	6	7	7	6	7	8	7	6	7	8	7	6	7	8
a — Spacing	12	11	11½	12	11	11½	12	11	11½	12	10½	11	11½	12	10½	11	11½	12	10½	11	11½
a — Length	39-1	38-10	39-3	39-1	38-10	39-5	39-5	39-2	39-7	39-9	39-6	40-1	40-10	39-9	39-6	40-1	41-0	40-1	39-10	40-7	41-6
b or b_1 — Size Bar #	7	7	8	7	7	8	7	7	8	7	7	8	9	7	7	8	9	7	7	8	9
b or b_1 — Spacing	12	11	11½	12	11	11½	12	11	11½	12	10½	11	11½	12	10½	11	11½	12	10½	11	11½
Length "b"	38-7	38-9	39-3	38-7	38-9	39-5	38-11	39-1	39-7	39-3	39-6	40-2	40-10	39-3	39-6	40-2	41-0	39-7	39-10	40-8	41-6
Length "b_1"	38-3	38-7	39-2	38-3	38-9	39-5	38-7	39-1	39-7	39-0	39-6	40-2	40-10	39-0	39-6	40-2	41-0	39-4	39-10	40-9	41-6
c — Size Bar #	6	7	8	6	7	8	6	7	8	6	7	8	9	6	7	8	9	6	7	8	9
c — Spacing	12	11	11½	12	11	11½	12	11	11½	12	10½	11	11½	12	10½	11	11½	12	10½	11	11½
c — Length	25-0	25-0	25-1	25-0	25-0	25-2	25-2	25-2	25-3	25-4	25-4	25-6	25-8	25-4	25-4	25-6	25-9	25-6	25-6	25-9	26-0
"d" Dist. Bars — Top Slab-Tot No	36	15	15	36	15	15	36	15	15	36	15	15	15	36	15	15	15	36	15	15	15
"d" Dist. Bars — Bottom Slab-Tot No	15	15	15	15	15	15	15	15	15	15	15	15	15	15	15	15	15	15	15	15	15
"e" Bars — Size Bar #	4	4	6	4	4	6	4	4	6	4	6	7	8	5	7	8	8	6	7	9	9
"e" Bars — Spacing	18	7	11½	12	5¾	11½	12	5½	9	10	10½	11	11½	12	10½	11	6½	12	9	11	9
Spacers — Number	76			80			84			104				110				116			
Quan — Concrete CY per lin ft	2.60	3.18	3.82	2.70	3.26	3.98	2.88	3.45	4.13	3.13	3.79	4.61	5.45	3.23	3.89	4.72	5.65	3.62	4.28	5.24	6.18
Quan — Reinf Lbs per lin ft	489	505	628	497	516	637	505	527	654	536	582	719	872	548	606	745	939	575	636	793	963

Note:

For boxes of height less than that shown in table, use next greater table height slabs, wall dimensions and reinforcing steel and make necessary changes in bar lengths, number of spacers and quantities. Number of "d" bars in table is slab total for all three cells.

RECOMMENDED BY THE SAN DIEGO REGIONAL STANDARDS COMMITTEE

Allen J. Kershaw — Dec. 1975

Coordinator R.C.E. 19807 — Date

DRAWING NUMBER **D-78A**

SAN DIEGO REGIONAL STANDARD DRAWING

TRIPLE BOX CULVERT
DETAILS NO. 1

Revision	By	Approved	Date
Enlarge	[illegible]	A.H.	9-88

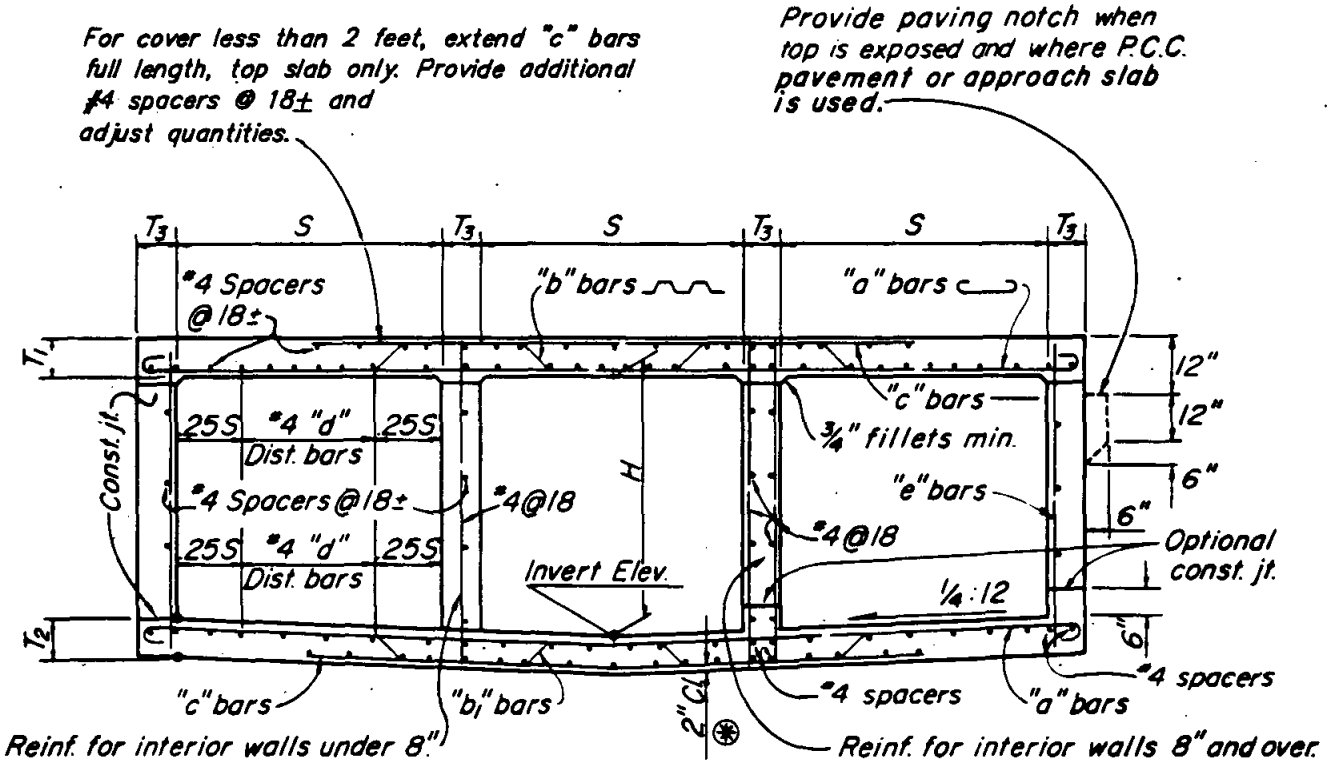

TYPICAL SECTION

⊛ For reinforcement clearance, except at bottom, see "Miscellaneous Details."

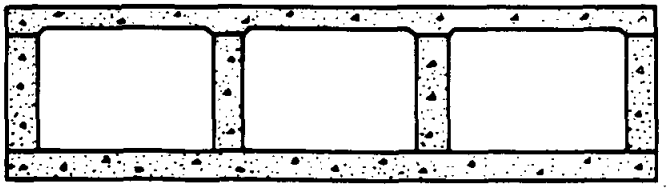

"FLAT INVERT" ALTERNATIVE

(When shown)

Revision	By	Approved	Date
Enlarge	JC	U.H.	9-88

SAN DIEGO REGIONAL STANDARD DRAWING

TRIPLE BOX CULVERT DETAILS NO. 2

RECOMMENDED BY THE SAN DIEGO REGIONAL STANDARDS COMMITTEE

Allan A. Kershaw — Dec. 1975

Coordinator R.C.E. 19807 — Date

DRAWING NUMBER D-78B

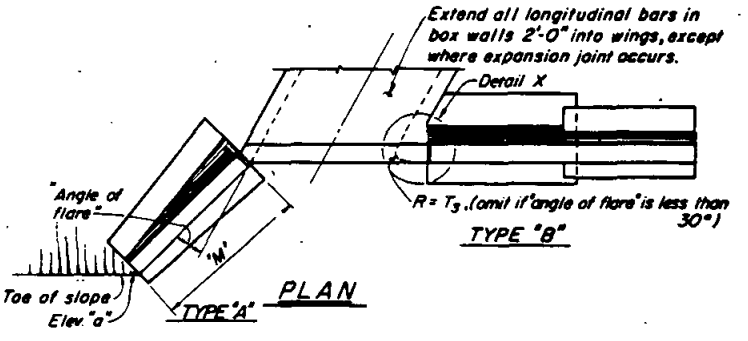

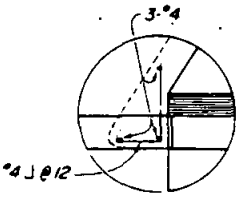

DETAIL X

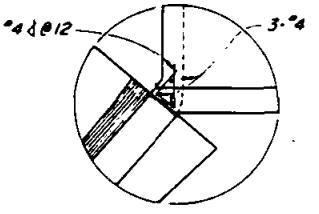

DETAIL Y

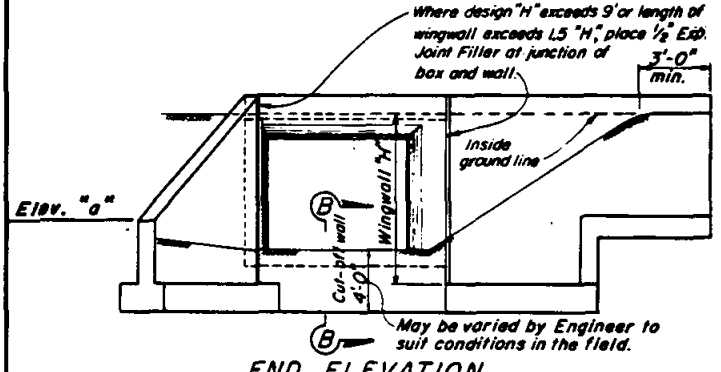

END ELEVATION

TYPE "A" TYPE "B"

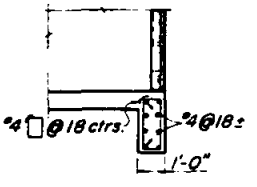

SEC B-B

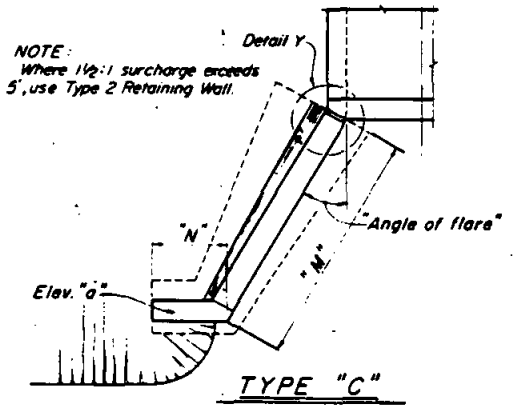

TYPE "C"

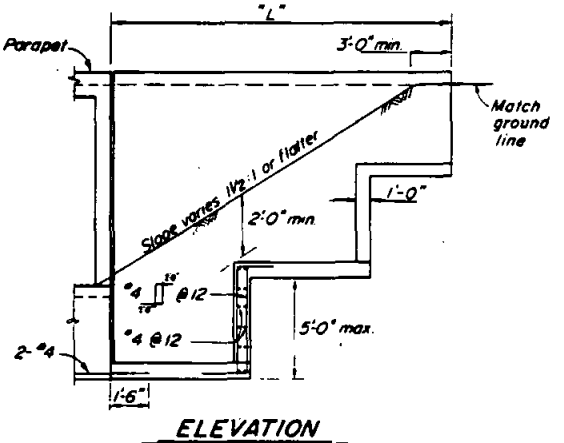

ELEVATION

RECOMMENDED BY THE SAN DIEGO REGIONAL STANDARDS COMMITTEE Coordinator R.C.E. 19807 Date Dec. 1975	SAN DIEGO REGIONAL STANDARD DRAWING	Revision	By	Approved	Date
		Enlarge		A.H.	7-88
DRAWING NUMBER D-79A	BOX CULVERT WINGWALL TYPES A, B & C DETAILS NO. 1				

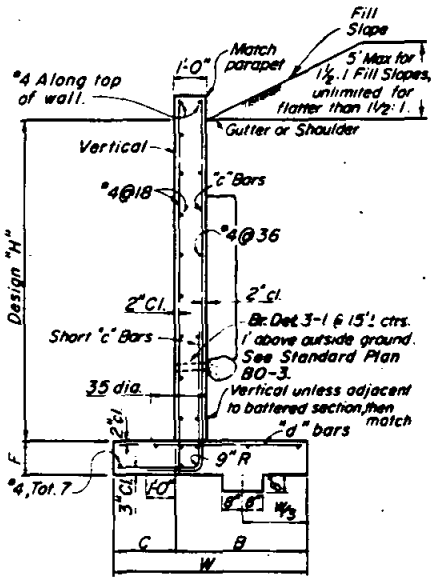

TYPICAL SECTION
H=4' THRU 12'

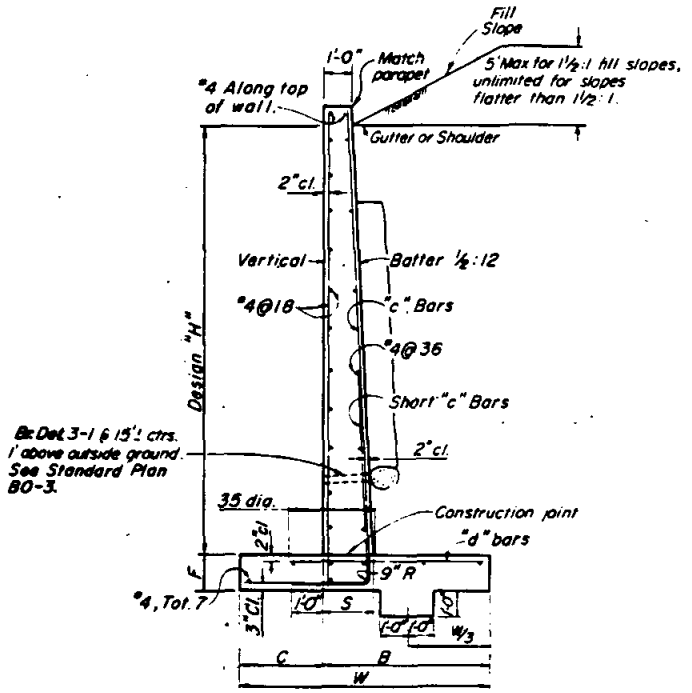

TYPICAL SECTION
H=13' THRU 16'

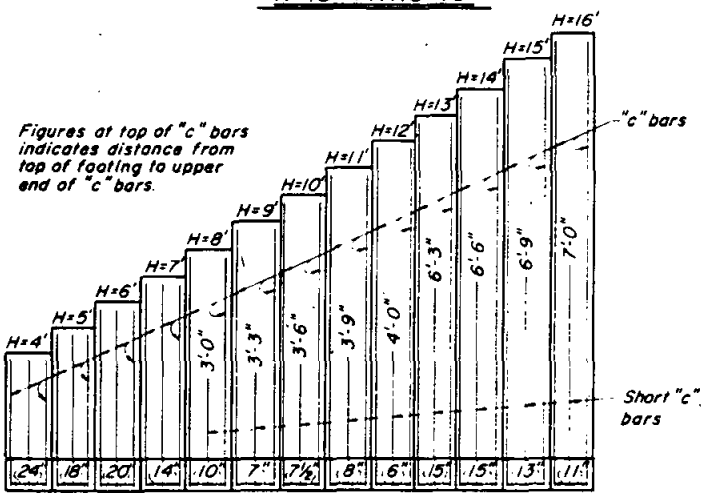

Design Notes:

Unit Stresses: f_s = 20,000 p.s.i., f_c = 1200 p.s.i., n=10

Maximum Toe Pressure = 1½ Tons/sq. ft.

Elevations, length and angle of flare of wings may be varied by the Engineer to suit conditions encountered in the field. Walls designed for 2' liveload surcharge, 1½:1 sloping surcharge not to exceed 5' in elevation plus 2' liveload surcharge, or unlimited 2:1 surcharge. Dimensions "H", "L", "M" "N", Elev. "a" and "Angle of flare" (as apply) are shown on the plans.

REINFORCED CONCRETE WINGWALLS													
"H"	4'	5'	6'	7'	8'	9'	10'	11'	12'	13'	14'	15'	16'
W	3'-2"	3'-8"	4'-2"	4'-8"	5'-2"	5'-8"	6'-2"	6'-8"	7'-2"	7'-8"	8'-2"	8'-8"	9'-2"
C	1'-0"	1'-2"	1'-4"	1'-6"	1'-8"	1'-10"	2'-0"	2'-2"	2'-4"	2'-6"	2'-8"	2'-10"	3'-0"
B	2'-2"	2'-6"	2'-10"	3'-2"	3'-6"	3'-10"	4'-2"	4'-6"	4'-10"	5'-2"	5'-6"	5'-10"	6'-2"
F	1'-2"												
Batter	None									½:12			
S	1'-0"	1'-0"	1'-0"	1'-0"	1'-0"	1'-0"	1'-0"	1'-0"	1'-0"	1'-6½"	1'-7"	1'-7½"	1'-8"
"c" Bars	#4@24	#4@18	#5@20	#5@14	#5@10	#5@7	#6@7½	#7@8	#7@6	#9@15	#10@15	#10@13	#10@11
"d" Bars	#4@24	#4@18	#5@20	#5@14	#5@10	#6@14	#7@15	#8@16	#7@12	#8@15	#9@15	#9@13	#9@11
Conc. C.Y./L.F.	0.32	0.38	0.44	0.49	0.55	0.61	0.67	0.73	0.79	1.02	1.10	1.18	1.26
Reinf. lbs./L.F.	13	16	19	25	30	37	49	62	76	73	90	104	125

Quantities do not include that portion above the design "H" limit.

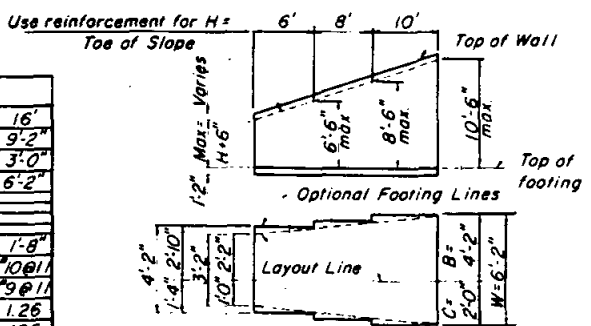

TYPICAL LAYOUT EXAMPLE

Revision	By	Approved	Date
Enlarge	EC	A.H.	9-88

SAN DIEGO REGIONAL STANDARD DRAWING

BOX CULVERT WINGWALL TYPES A, B & C DETAILS NO. 2

RECOMMENDED BY THE SAN DIEGO REGIONAL STANDARDS COMMITTEE

Allan A. Kershner — Dec. 1975

Coordinator R.C.E. 19807 — Date

DRAWING NUMBER D-79B

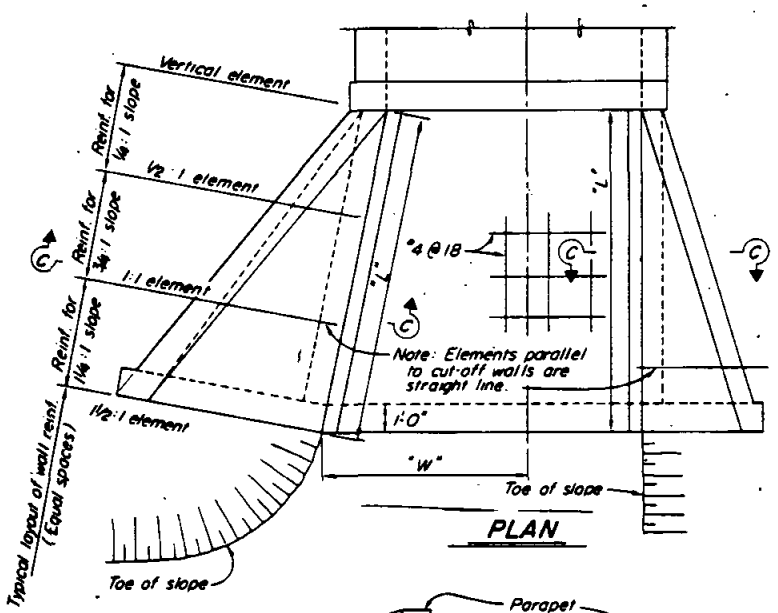

PLAN

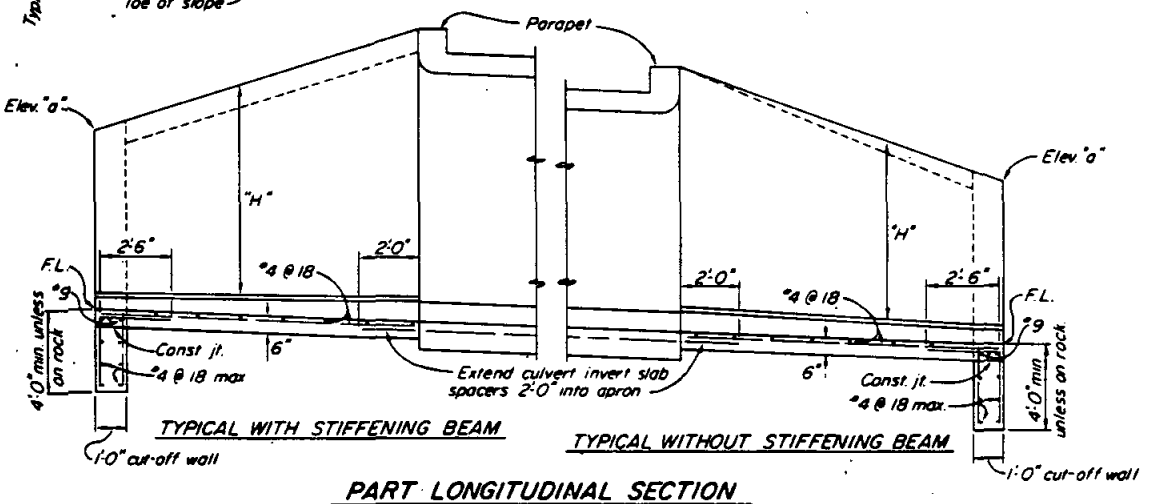

PART LONGITUDINAL SECTION

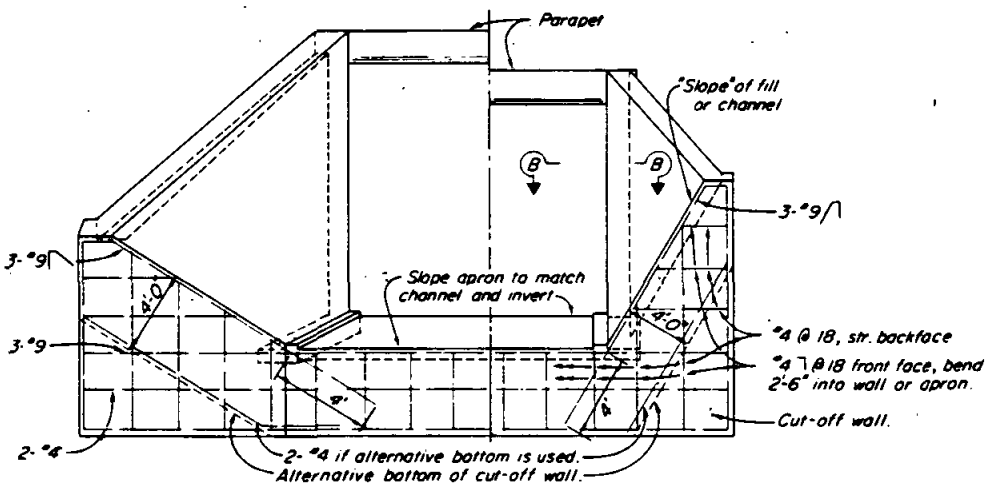

END ELEVATION

RECOMMENDED BY THE SAN DIEGO REGIONAL STANDARDS COMMITTEE Coordinator R.C.E. 19807 Date Dec. 1975	SAN DIEGO REGIONAL STANDARD DRAWING	Revision	By	Approved	Date
		Enlarge		A.H.	9-88
DRAWING NUMBER D-80A	BOX CULVERT WARPED WINGWALL DETAILS NO. 1				

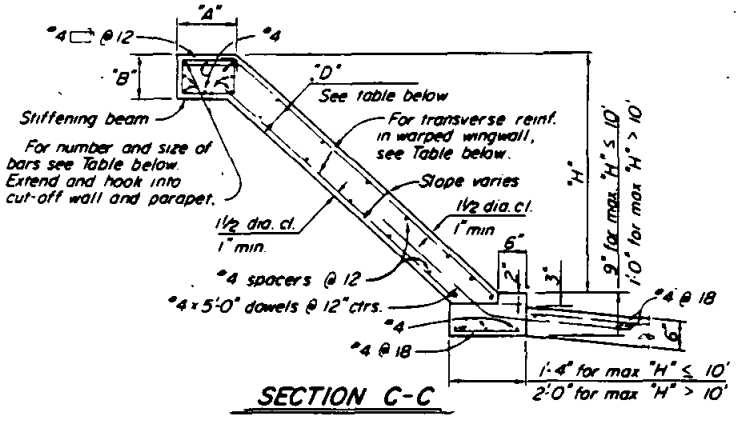

SECTION C-C

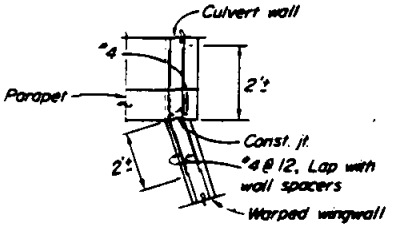

SECTION B-B

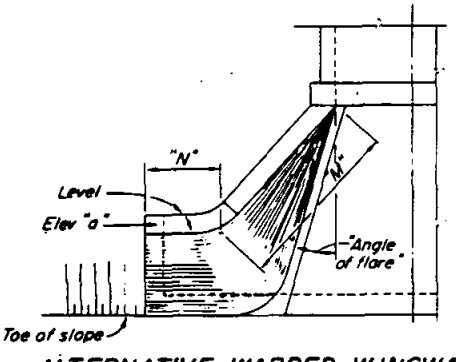

ALTERNATIVE WARPED WINGWALL

Use where additional protection to toe of embankment is required.

WARPED WINGWALLS

WALL DIMENSIONS AND REINFORCING									STIFFENING BEAM DIMENSIONS AND REINFORCING									
Element Slope	"H"	8' or less	10'	12'	14'	16'	18'	20'	"H" "L" max	12'	14'	16'	18'	20'	25'	30'	35'	40' or more
1/4 : 1	Front face reinf	#4 @ 12	#4 @ 7	#5 @ 7	#5 @ 5	#6 @ 6	#7 @ 7	#7 @ 6	6'	No beam Place 2-#6 in each								
	Rear face reinf	#4 @ 12	#4 @ 12	#4 @ 12	#4 @ 12	#4 @ 12	#4 @ 12	#4 @ 12	8'	face along top of								
3/10 : 1	Front face reinf	#4 @ 12	#4 @ 12	#4 @ 12	#4 @ 12	#4 @ 10	#4 @ 8	#4 @ 6	10'	wall	"A" = 1'-0"							
	Rear face reinf	#4 @ 12	#4 @ 12	#4 @ 12	#4 @ 10	#4 @ 7	#4 @ 6	#5 @ 8	12'		"B" = 9"				"A" = 1'-6"			
1/10 : 1	Front face reinf.	#4 @ 12	#4 @ 12	#4 @ 12	#4 @ 12	#4 @ 12	#4 @ 12	#4 @ 12	14'		Tot. 6'-#6				"B" = 1'-0"		"A" = 1'-10"	
	Rear face reinf.	#4 @ 8	#4 @ 8	#4 @ 5	#5 @ 6	#6 @ 7	#6 @ 6	#7 @ 6	16'				Tot. 6'-#7			"B" = 1'-0"	"A" = 2'-0"	
"D" at Cut-off Wall		6"	6"	6"	7½"	8"	9½"	11"	18'						Tot. 6'-#8		"B" = 1'-6"	
"D" at Culvert		6"	6"	6"	8"	9½"	11"	1'-1"	20'							Tot. 8'-#9		

Notes : Walls designed for 2' surcharge; earth load = 120#/cu. ft.; equivalent fluid pressure = 36#/cu ft.
Vary "D" of warped wall uniformly from that at cut-off wall to that at culvert, for max "H" > 12'.
Where abrasion is anticipated increase apron thickness to 7" min. to provide 2" min. reinforcement coverage.
Dimensions "L", "W", "H", "M", "N", Elev. "a", "Angle of flare", and end "Slope" (as apply) are shown on the plans.
Concrete shall be class 560-B-3250.

Revision	By	Approved	Date
Enlarge	[illegible]	A.H.	9-88

SAN DIEGO REGIONAL STANDARD DRAWING

BOX CULVERT WARPED WINGWALL DETAILS NO. 2

RECOMMENDED BY THE SAN DIEGO REGIONAL STANDARDS COMMITTEE

Allan A. Kershaw — Coordinator R.C.E. 19807 — Dec. 1975 Date

DRAWING NUMBER **D-80B**

GENERAL NOTES

QUANTITIES: QUANTITIES ARE FOR THE SLOPED INVERT SLAB AND DO NOT INCLUDE SPLICES IN LONGITUDINAL BARS, NOR TEMPERATURE REINFORCEMENT FOR EXPOSED TOP CULVERT, NOR CONCRETE OR REINFORCEMENT FOR PARAPETS OR CUTOFF WALLS.

SPECIAL COVERAGE: BOX STANDARD PLANS ARE NOT TO BE USED FOR CULVERTS IN A CORROSIVE ENVIRONMENT OR WHERE THERE IS A SEVERE ABRASIVE FLOW CONDITION.

DESIGNATION: SHOW ON PLANS AS SPAN X HEIGHT - STRENGTH CLASSIFICATION X LENGTH THUS 4 x 4 :A x 60', FOLLOWED BY ALTERNATIVES

ALTERNATIVES: INVERT WILL BE SLOPED UNLESS "TRAPEZOIDAL INVERT", "FLAT INVERT" OR "V INVERT" IS INCLUDED IN DESIGNATION. ENDS OF CULVERT WILL BE ROUNDED UNLESS "SQUARE ENDS" ARE DESIGNATED PARAPETS WILL BE AS SHOWN UNLESS "— FT. PARAPET" IS DESIGNATED IN PLANS. SUCH DESIGNATIONS MAY BE DIFFERENT FOR INLET AND OUTLET ENDS.

REINF. PLACEMENT: MAIN REINFORCEMENT IS POSITIONED TRANSVERSE OR, FOR CURVED CULVERTS, RADIAL. WHEN RADIAL, REINFORCING SPACING IS MEASURED ALONG THE ℄

CONSTRUCTION NOTES

CONCRETE:

BOTTOM SLAB & WALLS SHALL BE CLASS 560-B-3250

TOP SLAB SHALL BE CLASS 560-C-3250

EXPANSION JOINTS:

BOTTOM SLAB - NO EXPANSION JOINTS SHALL BE PLACED

TOP SLAB AND WALLS - WHEN COVER IS LESS THAN SPAN LENGTH, PLACE 1/2" EXPANSION JOINT FILLER AT 30'± CENTERS OUTSIDE THE PAVED ROADWAY LANES AND PLACE BRIDGE DETAIL 3-2 AT 30'± CENTERS UNDER PAVED ROADWAY LANES.
WHEN COVER IS MORE THAN SPAN LENGTH, PLACE 1/2" EXPANSION JOINT FILLER AT 30'± CENTERS AND ADDITIONAL 1/2" EXPANSION JOINTS AT LOCATIONS OF CHANGE IN FOUNDATION CHARACTER, AS DIRECTED BY THE ENGINEER.

CONSTRUCTION LOADS:

NOT PERMITTED UNTIL CONCRETE HAS REACHED A STRENGTH OF 3,000 PSI OR AGE OF 28 DAYS, WHICHEVER OCCURS FIRST, AND FALSEWORK PLANS HAVE BEEN SUBMITTED BY THE CONTRACTOR, TO THE ENGINEER, AND APPROVED.

CONSTRUCTION JOINTS:

TEMPORARY JOINTS MAY BE PERMITTED IF NORMAL (OR RADIAL) TO ℄ OF RCB. OTHERWISE, THE CONTRACTOR IS TO SUBMIT A PROPOSAL FOR CONSIDERATION.

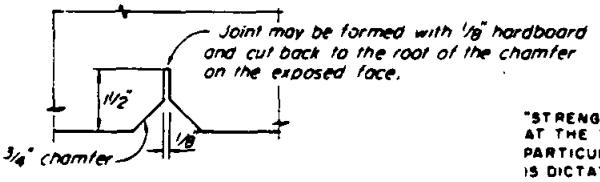

BRIDGE DETAIL 3-2
(Portion)

See Standard Drawing C-15

DESIGN NOTES

SPECIFICATIONS:

DESIGN: A A S H O DATED 1973 WITH REVISIONS AND AS SUPPLEMENTED BY STATE OF CALIFORNIA BRIDGE PLANNING AND DESIGN MANUAL.

SECTIONS DESIGNED FOR CULVERT IN A TRENCH ON HARD FOUNDATION, OR CULVERT UNTRENCHED ON YIELDING FOUNDATION. FOR CULVERTS ON PILES OR ROCK FOUNDATIONS, SPECIAL DESIGN WILL BE REQUIRED.

LOADING

LIVE LOAD: FOR LEGAL HIGHWAY LOADS, USE HS20-44 OR ALTERNATIVE, WITH 30% IMPACT FOR ALL COVER DEPTHS NO IMPACT ON INVERT

COVER LESS THAN 2'- WHEEL LOAD DISTRIBUTION ON THE TOP SLAB IS E=0.175S+3.2' LONGITUDINALLY AND CONCENTRATED ALONG THE SPAN WHEEL LOAD DISTRIBUTION ON THE INVERT SLAB IS 7.5' LONGITUDINALLY AND UNIFORMLY OVER THE BREATH OF THE CULVERT

COVER 2' OR MORE - WHEEL LOADS DISTRIBUTED UNIFORMLY OVER A SQUARE, THE SIDES OF WHICH ARE 1.75 TIMES THE DEPTH OF COVER, BUT NOT LESS LONGITUDINALLY THAN E ON THE TOP SLAB, OR 7.5' ON THE INVERT SLAB WHEN SUCH AREAS FROM SEVERAL WHEEL CONCENTRATIONS OVERLAP, THE TOTAL LOAD SHALL BE CONSIDERED AS UNIFORMLY DISTRIBUTED OVER THE AREA DEFINED BY THE OUTSIDE LIMITS OF THE INDIVIDUAL AREAS, BUT THE OVERALL LONGITUDINAL DIMENSION SHALL NOT EXCEED THE TOTAL LENGTH OF THE SUPPORTING SLAB. NEGLECT LIVE LOAD, ON SINGLE SPANS WHEN COVER IS MORE THAN 8' AND EXCEEDS SPAN, AND ON MULTIPLE SPANS WHEN COVER EXCEEDS DISTANCE BETWEEN EXTERIOR WALLS.

DEAD LOAD: EARTH LOAD OF 120 PCF AND AN EQUIVALENT FLUID PRESSURE OF 36 PCF, REDUCED TO 84 PCF AND 25 PCF RESPECTIVELY FOR CLEAR SPANS OF 20' OR LESS.

UNIT STRESSES: F_s = 20,000 PSI, N=10

F_c = 1,200 PSI

REINFORCEMENT EMBEDMENT IS 1 1/2 DIA CLEAR, MIN 1" AND IN 1/4" INCREMENTS, EXCEPT AS NOTED

DISTRIBUTION "d" BARS EXPRESSED AS A % OF MAIN POSITIVE REINFORCEMENT

CLASSIFICATION "A" TOP SLAB = $\frac{100}{\sqrt{SPAN}}$, MAX 50% (UNLESS TRAFFIC LONGITUDINAL)

BOTTOM SLAB = #4 @ 18" MAX

CLASSIFICATION "B" TO "E": TOP AND BOTTOM SLABS #4 @ 18" MAX.

USE OF STANDARD DRAWING

"STRENGTH CLASSIFICATION", SYMBOLIZED BY THE LETTERS "A", "B", "C" ETC., AT THE TOP OF THE DATA TABLE IS MERELY A CONVENIENT DESIGNATION FOR A PARTICULAR STRUCTURAL SECTION FOR A CULVERT OF ANY GIVEN OPENING IT IS DICTATED BY THE COVER OR DEPTH OF FILL OVER THE TOP SLAB

LIVE LOAD & RCB DIRECTIONAL TERMINOLOGY

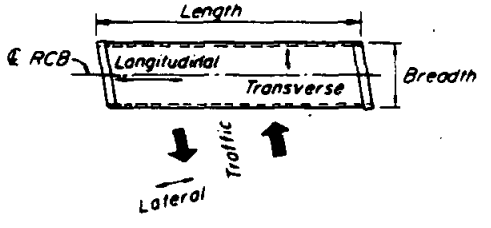

RECOMMENDED BY THE SAN DIEGO REGIONAL STANDARDS COMMITTEE

Allan O Kruckeberg Dec. 1975
Coordinator R.C.E. 19807 Date

DRAWING NUMBER **D-81A**

SAN DIEGO REGIONAL STANDARD DRAWING

BOX CULVERT MISCELLANEOUS DETAILS NO. 1

Revision	By	Approved	Date
Enlarge		G.H.	10/88

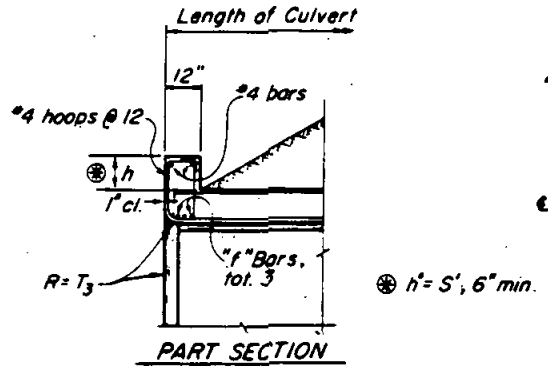

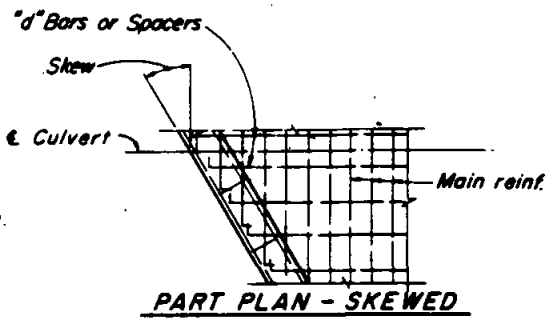

PARAPET DETAILS FOR SINGLE SPAN CULVERTS

PARAPET "f" BAR NOS.			
SPAN \ SKEW ANGLE	0° TO 15°	16° TO 30°	31° TO 45°
4'	#4	#4	#4
6'	#4	#4	#5
8'	#4	#5	#6
10'	#5	#6	#7
12'	#6	#7	#8
14'	#7	#8	#9

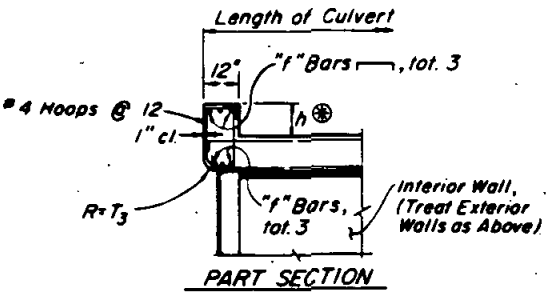

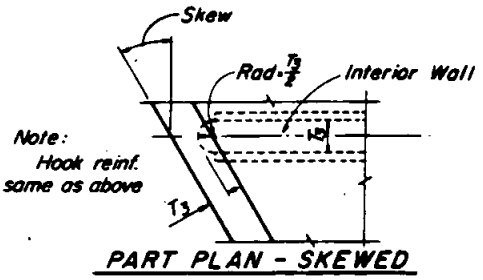

PARAPET DETAILS FOR MULTIPLE SPAN CULVERTS

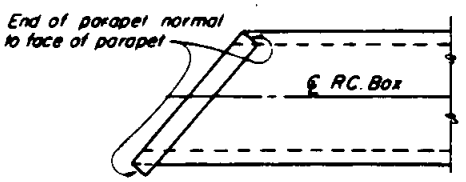

PARAPET DETAIL FOR SKEWED CULVERTS W/O WINGWALLS

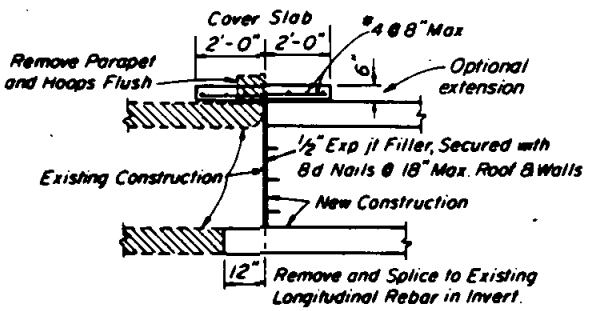

COVER: 1' AND GREATER

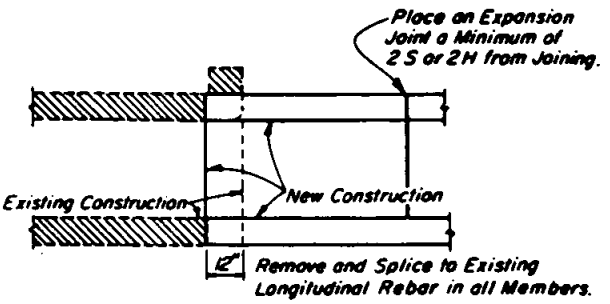

COVER: EXPOSED TOP AND GREATER

CULVERT EXTENSION

20° SKEW MAXIMUM

Revision	By	Approved	Date
Enlarge	[illegible]	O.H.	10/88

SAN DIEGO REGIONAL STANDARD DRAWING

BOX CULVERT MISCELLANEOUS DETAILS NO. 2

RECOMMENDED BY THE SAN DIEGO REGIONAL STANDARDS COMMITTEE

Allan O. Kaufman Dec. 1975
Coordinator R.C.E. 16807 Date

DRAWING NUMBER D-81B

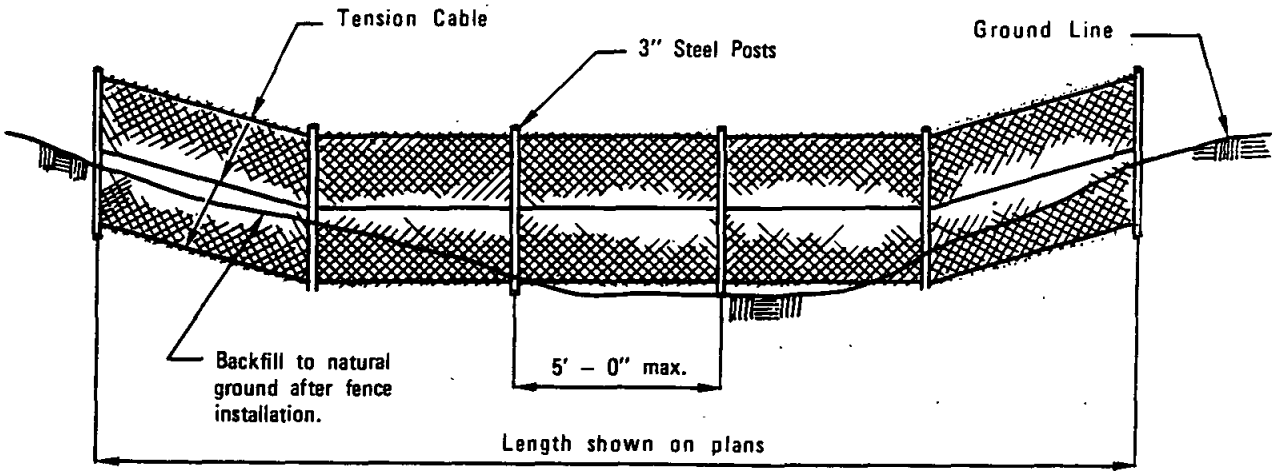

ELEVATION

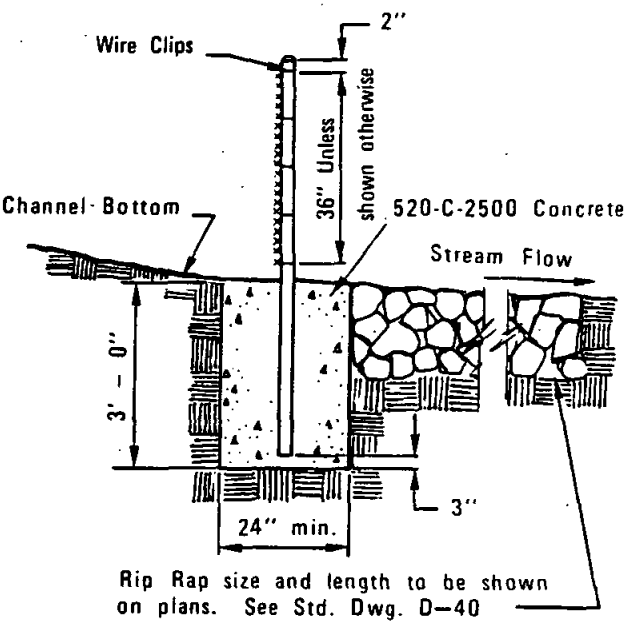

SECTION

NOTES:

1. Fence fabric shall be 2" mesh, 9 gage galvanized wire, chainlink placed on the upstream side of the posts and tension cables.
2. Tension cable shall be 5/16" diameter steel at 18" c/c secured at ends with cable clamps. Secure fence to cable with No. 12 galv. steel wire looped at 6" c/c.
3. Posts shall be 3" diameter steel pipe, 5.79 lb./ft. Fill with mortar after placing.
4. Fence fabric shall be secured to posts with 9 gage wire clips at 9" c/c.

LEGEND ON PLANS

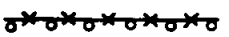

RECOMMENDED BY THE SAN DIEGO REGIONAL STANDARDS COMMITTEE Harry R. Holt Oct 1982 Chairman R.C.E. C13768 Date	SAN DIEGO REGIONAL STANDARD DRAWING	Revision	By	Approved	Date
DRAWING NUMBER D-82	DEBRIS FENCE				

ELECTRICAL SYSTEMS

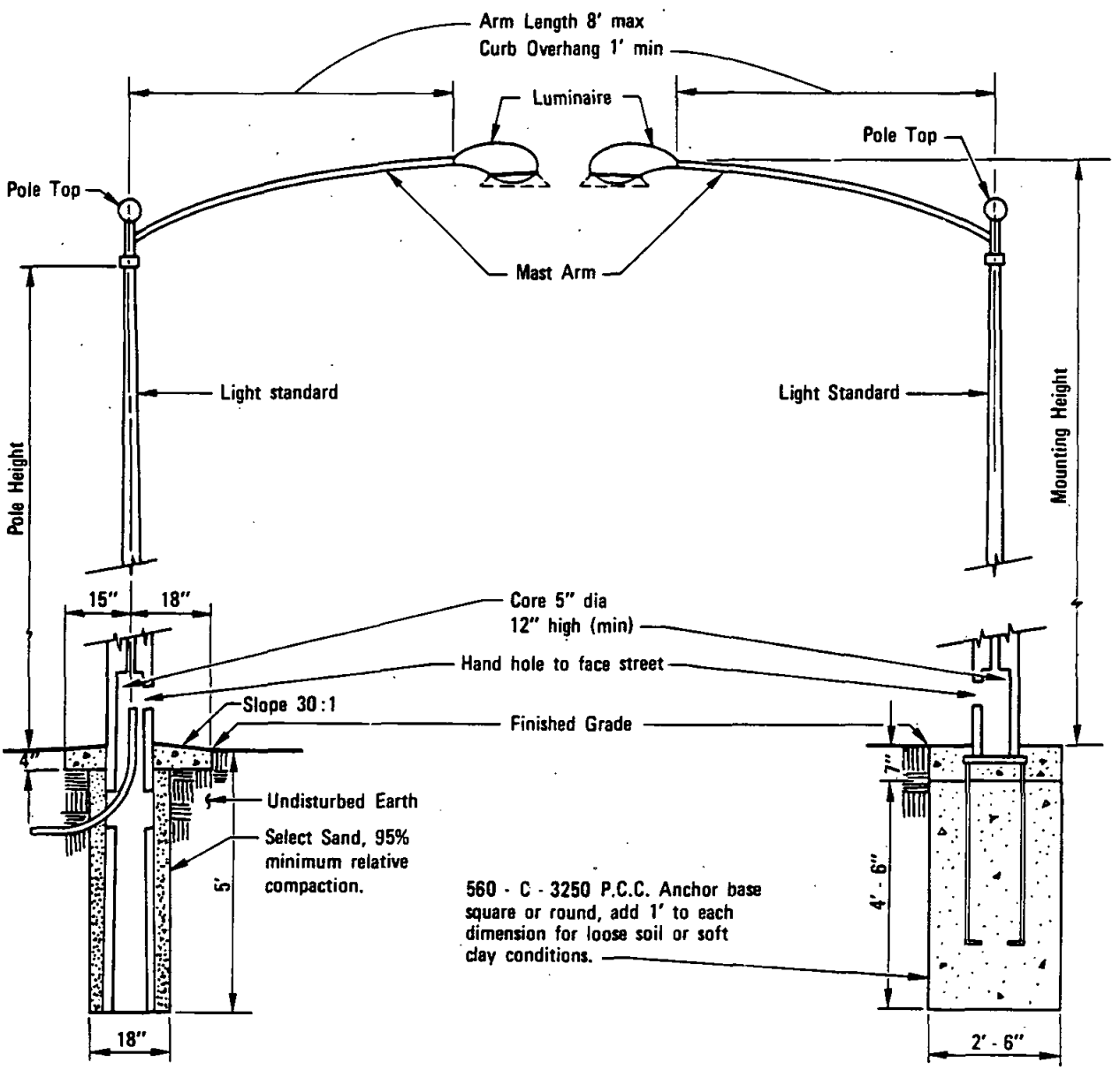

DIRECT BURIAL FOUNDATION

ANCHOR BASE FOUNDATION

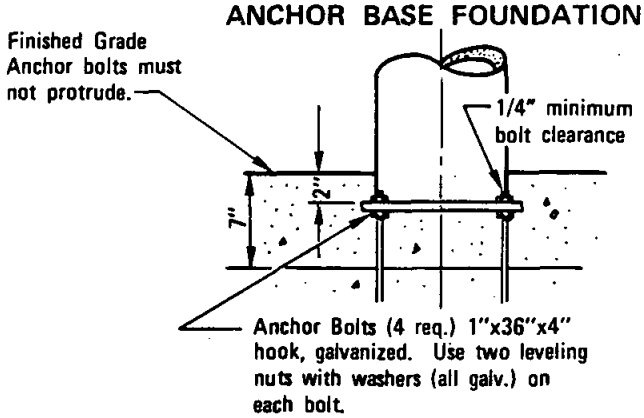

POLE HEIGHT	MOUNTING HEIGHT	LAMP SIZE (WATTS)
25' ± 2'	27' ± 1'	170 M.V. 100 H.P.S. 90 L.P.S.
28' ± 2'	30' ± 1'	400 M.V. 250 H.P.S. 180 L.P.S.
23' – 0"	26' – 9"	70 H.P.S.
26' – 6"	30' – 0"	150 H.P.S.

Revision	By	Approved	Date
Table	[illegible]	M.B.	5-86

SAN DIEGO REGIONAL STANDARD DRAWING

STREET LIGHTING STANDARD

RECOMMENDED BY THE SAN DIEGO REGIONAL STANDARDS COMMITTEE

Allan A. Kershaw — Coordinator R.C.E. 19807

Dec. 1975 — Date

DRAWING NUMBER E-1

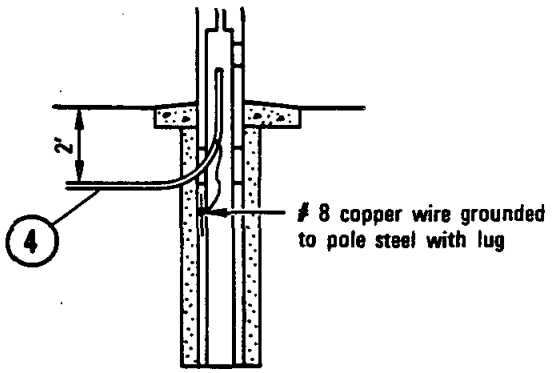

STEEL CONDUIT

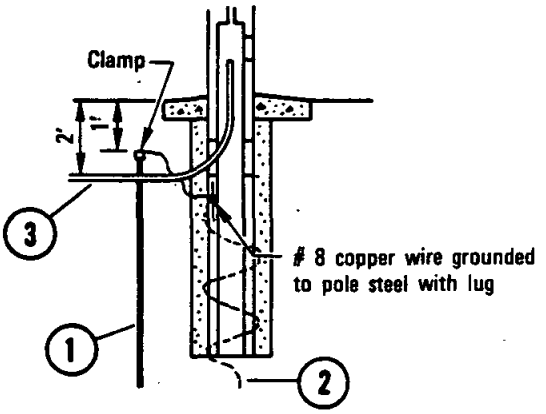

NON–METALLIC CONDUIT

DIRECT BURIAL FOUNDATION

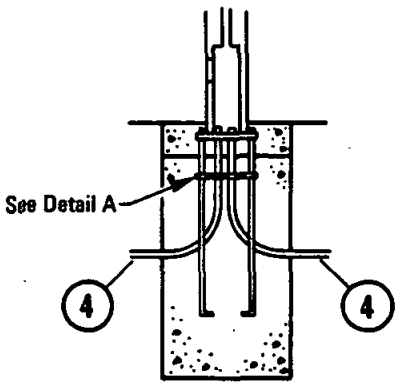

STEEL CONDUIT

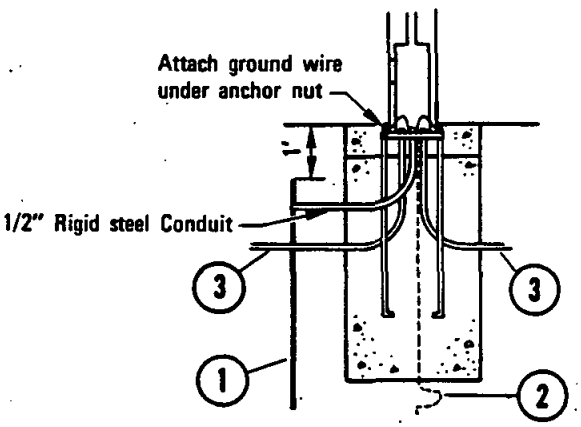

NON–METALLIC CONDUIT

ANCHOR BASE FOUNDATION

1. 3/4"x 8' copper covered steel ground rod.
2. Alternate Ground: 15' no. 4 bare stranded copper wire, coiled.
3. Approved non-metallic conduit.
4. Steel conduit.

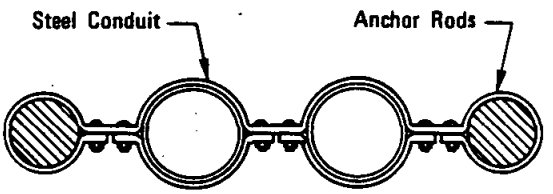

DETAIL A

RECOMMENDED BY THE SAN DIEGO REGIONAL STANDARDS COMMITTEE Coordinator R.C.E. 19807 Date Dec. 1975	SAN DIEGO REGIONAL STANDARD DRAWING	Revision	By	Approved	Date
DRAWING NUMBER E-2	GROUNDING OF CONCRETE LIGHTING STANDARDS				

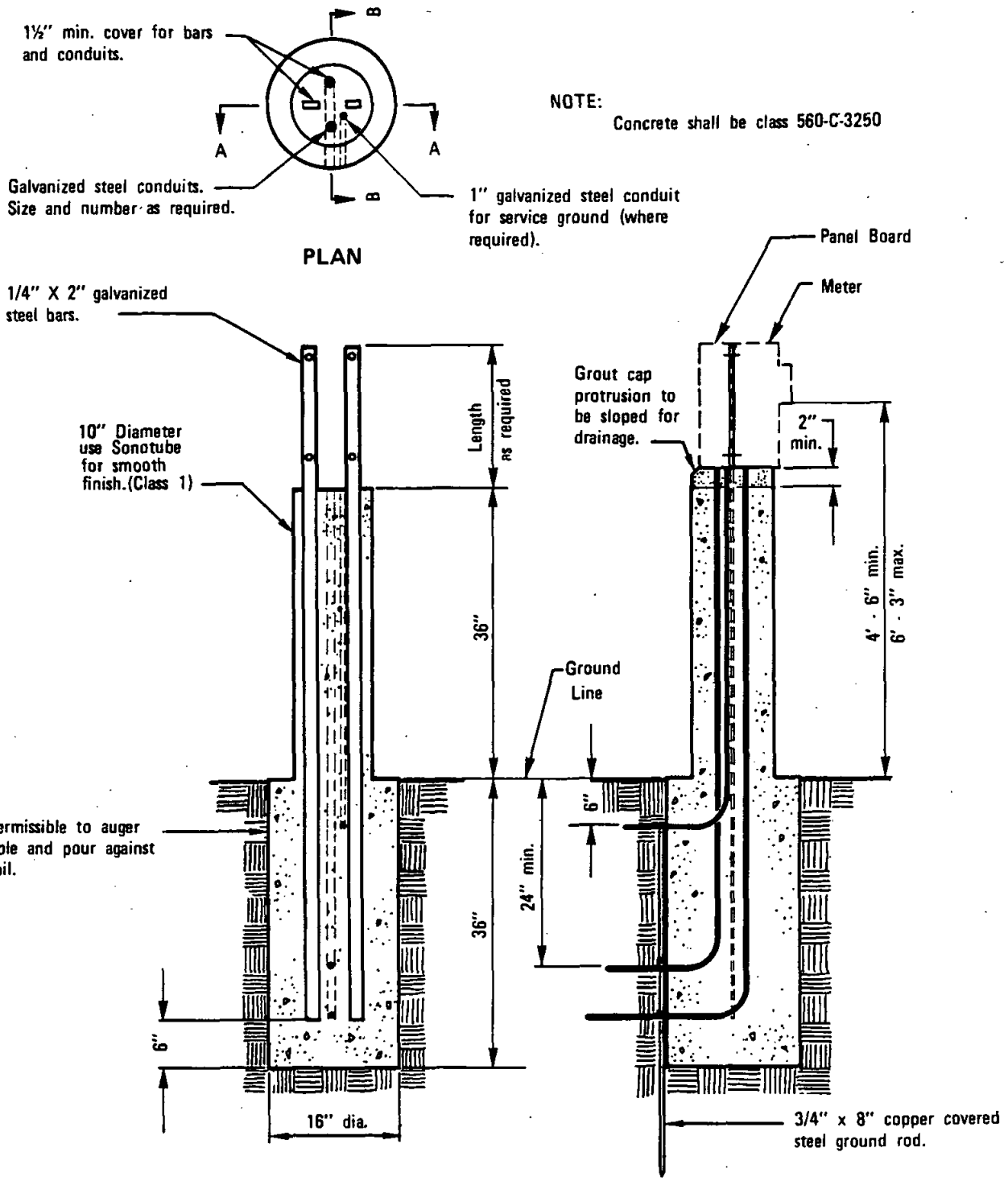

Revision	By	Approved	Date
Conc.	RC	MB.	5-86

SAN DIEGO REGIONAL STANDARD DRAWING

PEDESTAL FOR ELECTRICAL EQUIPMENT

RECOMMENDED BY THE SAN DIEGO REGIONAL STANDARDS COMMITTEE

Coordinator R.C.E. 19807 — Dec. 1975 Date

DRAWING NUMBER E-33

GENERAL SURFACE IMPROVEMENTS

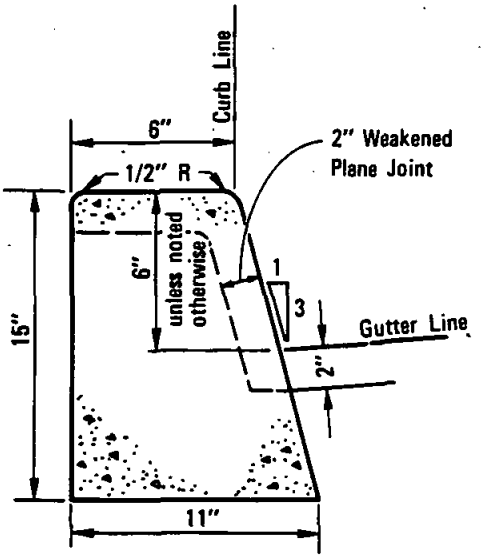

6" CURB

Area = 0.89 SQ. FT.

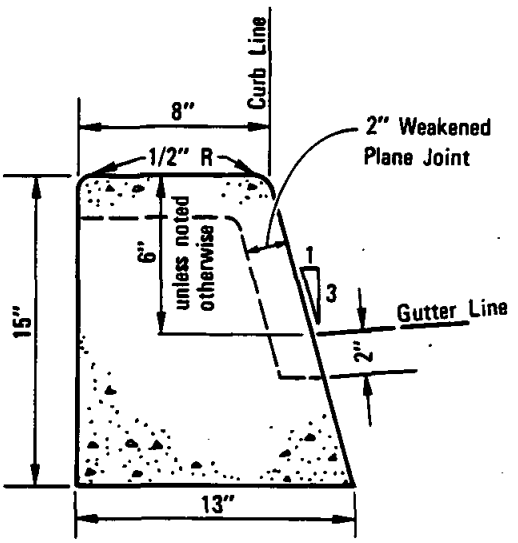

8" CURB

Area = 1.09 SQ. FT.

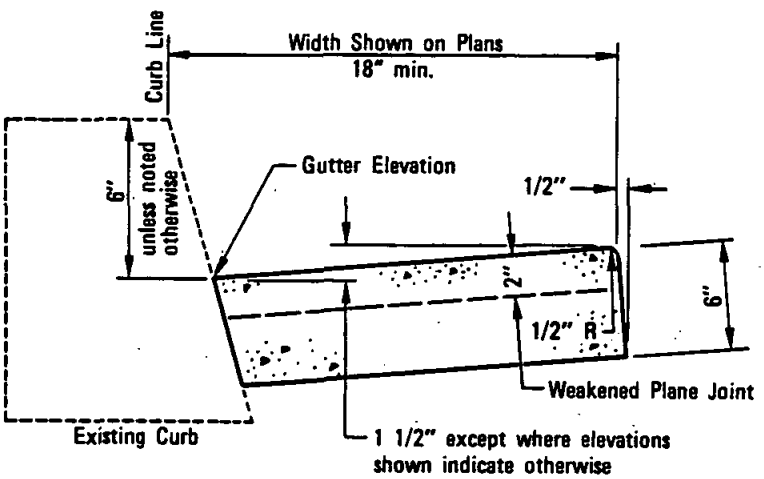

GUTTER

NOTES:

1. Concrete shall be 520-C-2500.
2. See Standard Drawing G-10 for joint details.
3. Slope top of curb 1/4" per foot toward street.

LEGEND ON PLANS

6" curb

Revision	By	Approved	Date
Conc.		M.B.	5-86
Note 3			7-88

SAN DIEGO REGIONAL STANDARD DRAWING

CURBS AND GUTTER - SEPARATE

RECOMMENDED BY THE SAN DIEGO REGIONAL STANDARDS COMMITTEE

Coordinator R.C.E. 19807 — Dec. 1975 Date

DRAWING NUMBER **G-1**

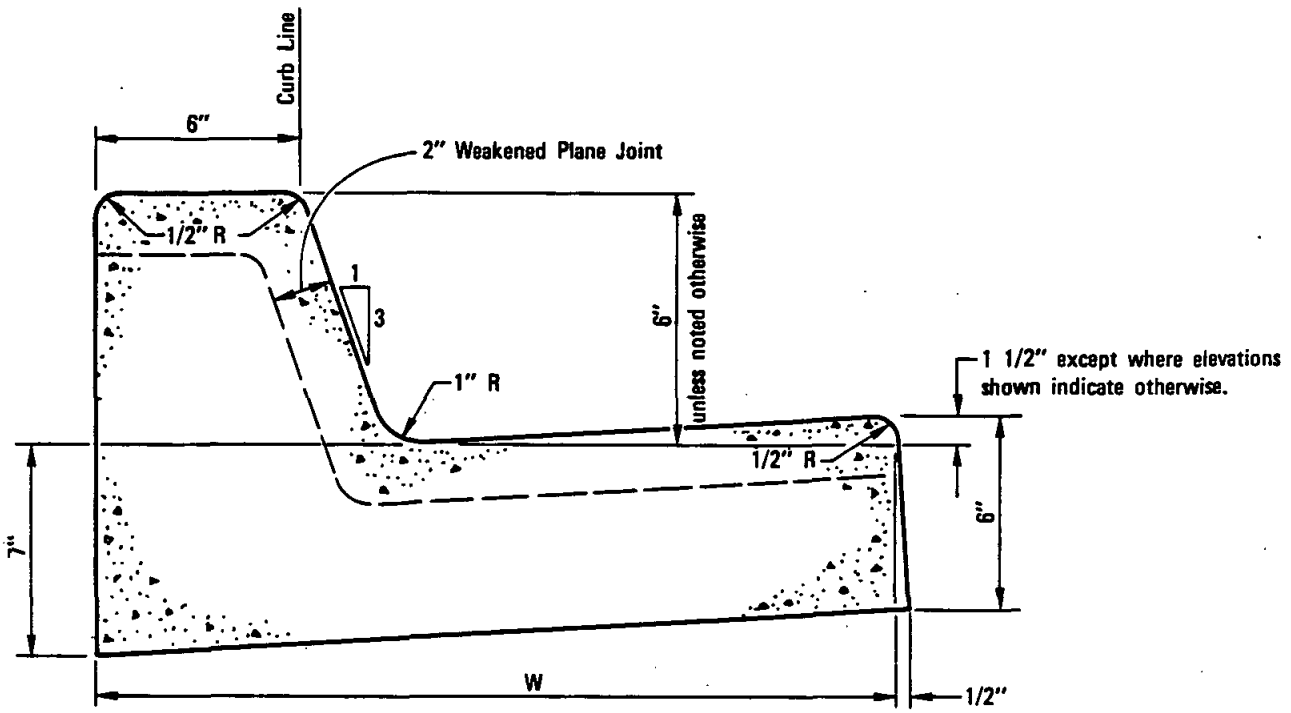

TYPE G & H CURB

TYPE	W	* AREA SQ. FT.
G	24"	1.34
H	30"	1.61

* with 6" Curb Face

NOTES:

1. Concrete shall be 520-C-2500.
2. See Standard Drawing G-10 for joint details.
3. Slope top of curb 1/4" per foot toward street.

LEGEND ON PLANS

RECOMMENDED BY THE SAN DIEGO REGIONAL STANDARDS COMMITTEE

Coordinator R.C.E. 19607 — Dec. 1975 Date

DRAWING NUMBER G-2

SAN DIEGO REGIONAL STANDARD DRAWING

CURB AND GUTTER - COMBINED

Revision	By	Approved	Date
Conc.		M.B.	5-86
Note 3		A.H.	7-88

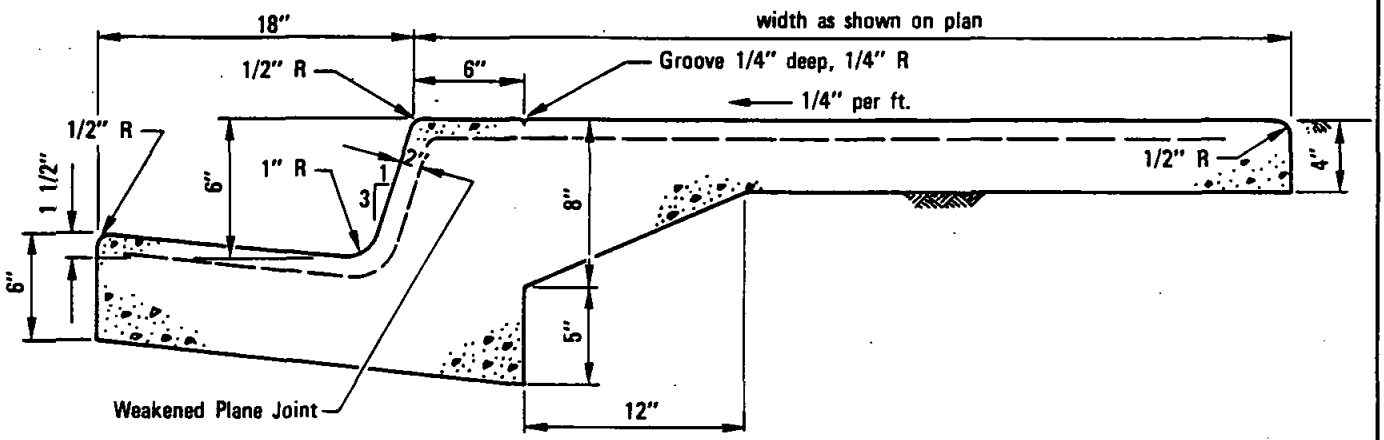

NOTES

1. Concrete shall be 520-C-2500.
2. See Standard Drawing G-10 for joint details.
3. Monolithic curb, gutter and sidewalk is to be used with Agency approval only.

LEGEND ON PLANS

Revision	By	Approved	Date
Thickness	[illegible]	D. S.	7-79
Thickness	[illegible]	M.B.	6-82
Conc.	[illegible]	MB	5-86

SAN DIEGO REGIONAL STANDARD DRAWING

MONOLITHIC CURB, GUTTER AND SIDEWALK

RECOMMENDED BY THE SAN DIEGO REGIONAL STANDARDS COMMITTEE

Allan A Kershaw — Dec. 1975

Coordinator R.C.E. 19807 — Date

DRAWING NUMBER G-3

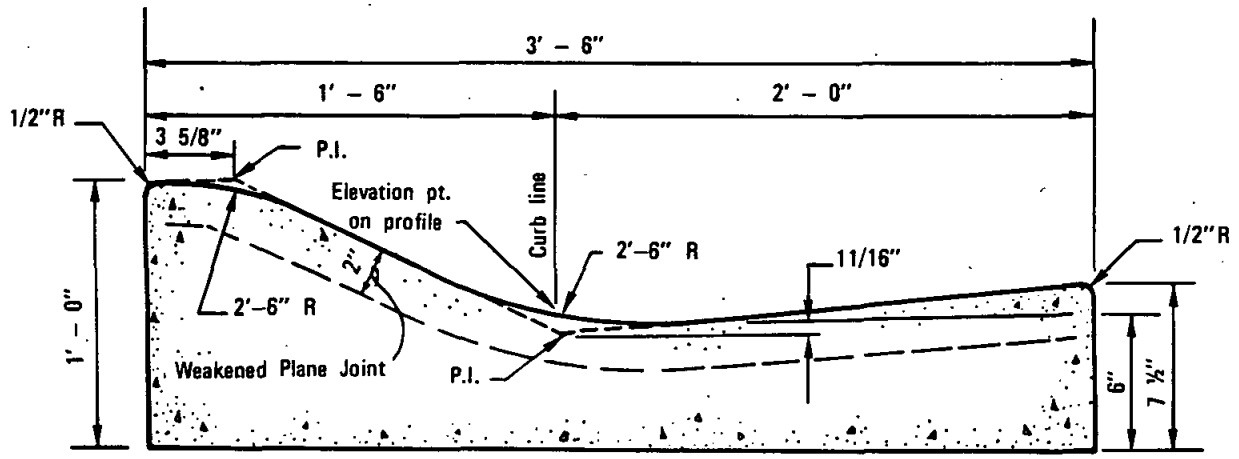

CURB AREA
(2.23 sq. ft.)

NOTES:

1. Transition to type G curb at all curb returns, except where sidewalk ramps are provided, and at all cul-de-sacs with drainage structures.
2. See Standard Drawing D-6.1 for Rolled Curb Inlet.
3. Concrete shall be 520-C-2500.
4. See Standard Drawing G-10 for joint details.

LEGEND ON PLANS

RECOMMENDED BY THE SAN DIEGO REGIONAL STANDARDS COMMITTEE Coordinator R.C.E. 19807 Dec. 1975 Date	SAN DIEGO REGIONAL STANDARD DRAWING	Revision	By	Approved	Date
		X-Sect.	TRP	M. B.	10-82
		Conc.		M.B.	5-86
DRAWING NUMBER G-4	CURB AND GUTTER-ROLLED				

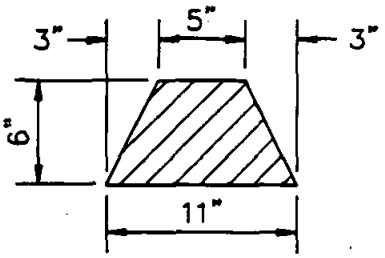

TYPE A–SECTION

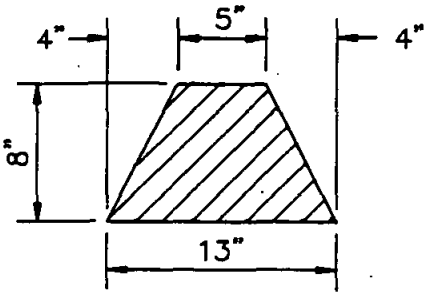

TYPE B–SECTION

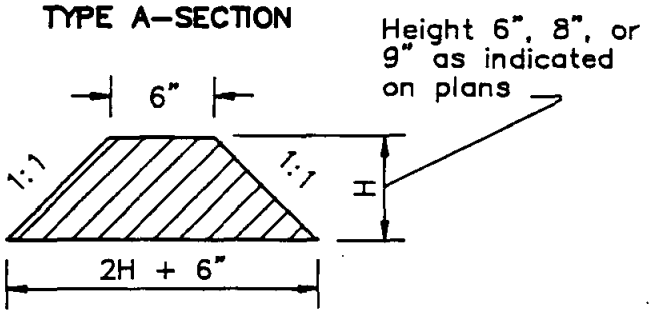

TYPE C–SECTION

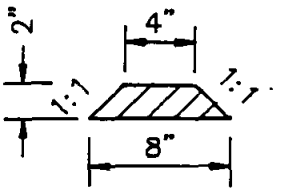

TYPE D–SECTION

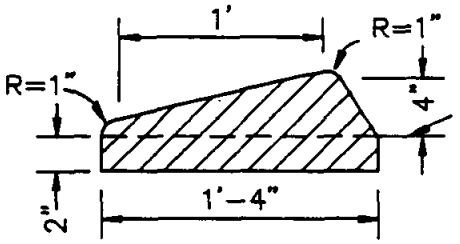

TYPE E–SECTION

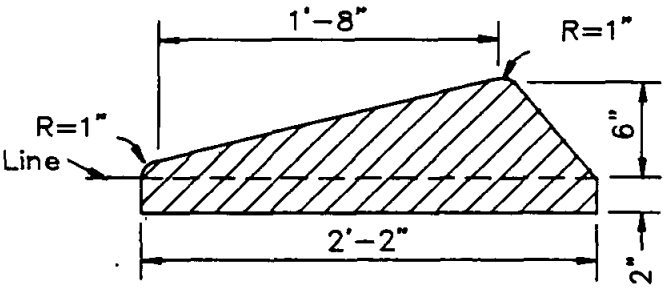

TYPE F–SECTION

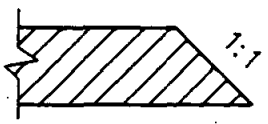

Slope end of dike 1:1 when not joining other improvements

ALL TYPES – SIDE VIEW

APPROX. DIKE QUANTITIES	
TYPE	TONS/LIN. FT.
A	0.0250
B	0.0375
C–6"	0.0375
C–8"	0.0583
C–9"	0.0702
D	0.0062
E	0.0407
F	0.0623

NOTES:

1. Dike is to be placed on a minimum 2" of A.C. road surfacing; extending throughout the width of the dike.
2. AR–8000 grade asphalt to be used for all dikes.
3. A.C. dikes may be shaped and compacted with an extrusion machine or other equipment capable of shaping and compacting the material to the required cross section.

LEGEND ON PLANS

Type A Dike

Revision	By	Approved	Date
Type E	SC	GH	10/88
Type F	SC	G.H.	10/88

SAN DIEGO REGIONAL STANDARD DRAWING

DIKES - ASPHALT CONCRETE

RECOMMENDED BY THE SAN DIEGO REGIONAL STANDARDS COMMITTEE

Allan A. Kashani — Dec. 1975

Coordinator R.C.E. 19807 — Date

DRAWING NUMBER G-5

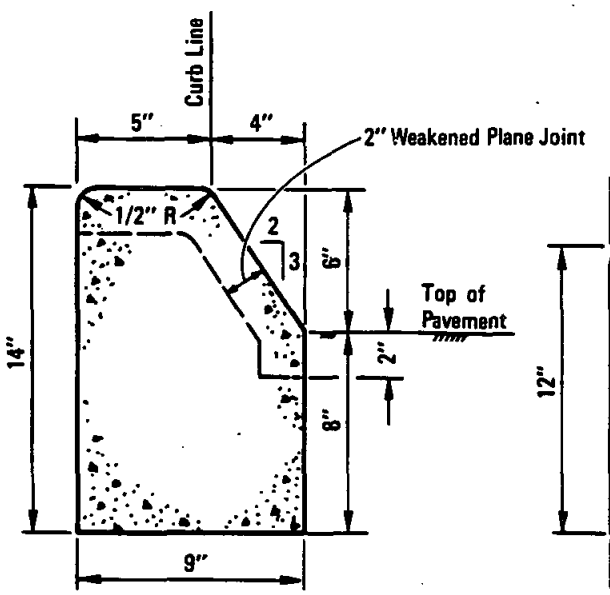

B–1
AREA = 0.79 SQ.FT.

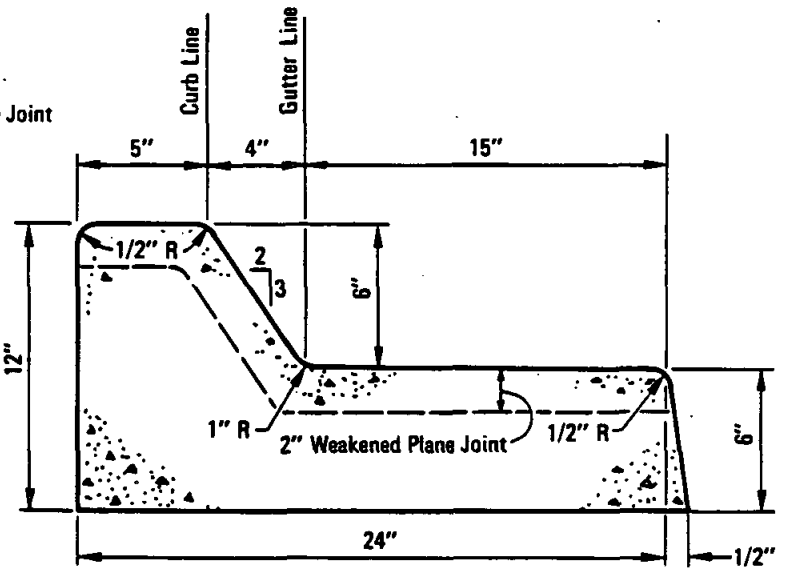

B–2
AREA = 1.29 SQ.FT.

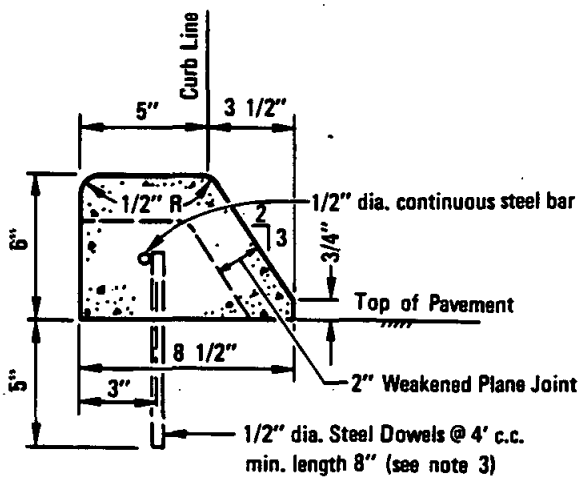

B–3
AREA = 0.29 SQ.FT.

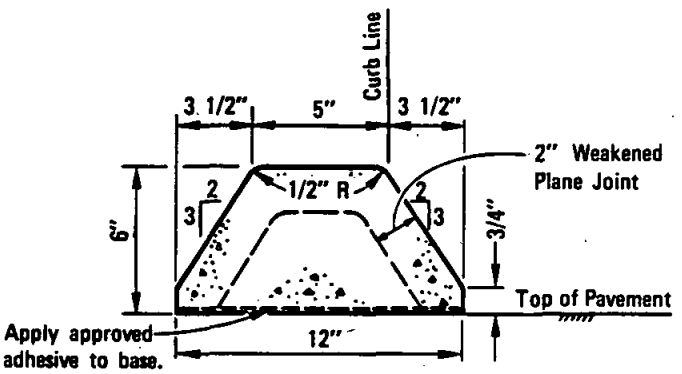

B–4
AREA = 0.35 SQ.FT.

NOTES

1. Concrete shall be 520-C-2500.
2. See Standard Drawing G-10 for joint details.
3. Extruded type B-3 curb shall be anchored to existing pavement by placing steel dowels and reinforcing steel as shown or by using an approved adhesive.

LEGEND ON PLANS

Type B-2 Curb and Gutter

Type B-1, B-3, B-4 Curb

RECOMMENDED BY THE SAN DIEGO REGIONAL STANDARDS COMMITTEE

Coordinator R.C.E. 19807 — Dec. 1975 Date

DRAWING NUMBER G-6

SAN DIEGO REGIONAL STANDARD DRAWING

CURBS AND GUTTER - MEDIANS

Revision	By	Approved	Date
Note 1		D.S.	7.79
Conc.		M.B.	5-86

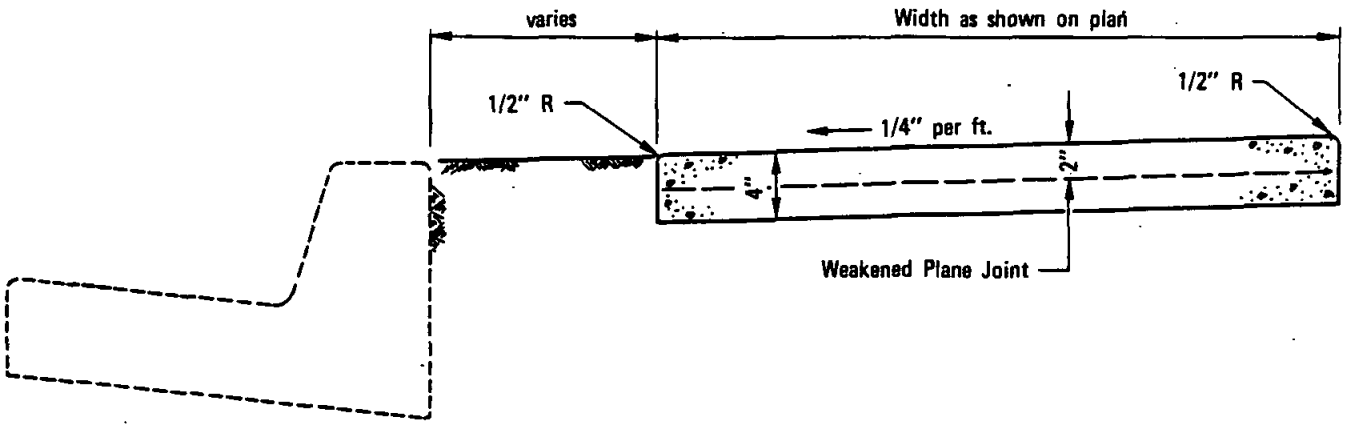

NON–CONTIGUOUS

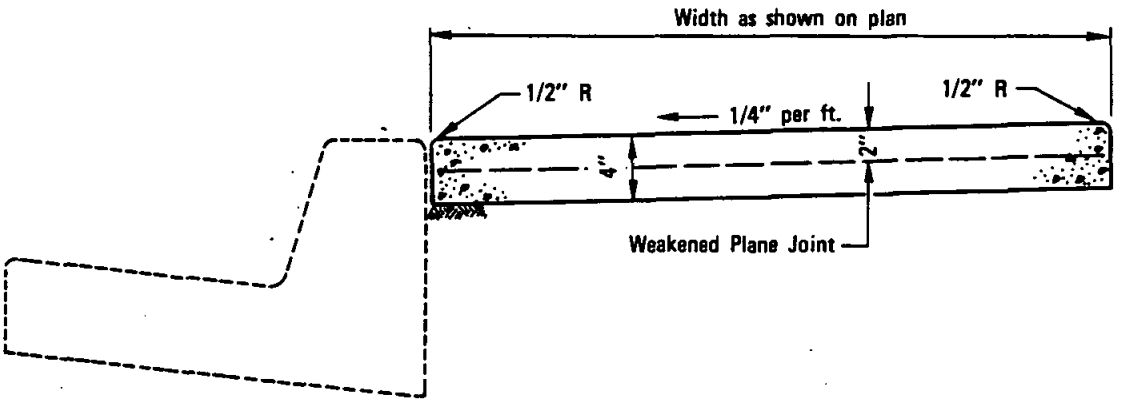

CONTIGUOUS

NOTES

1. Concrete shall be 520-C-2500.
2. See Standard Drawing G-9 and G-10 for joint details.

LEGEND ON PLANS

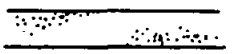

Revision	By	Approved	Date
Thickness	[illegible]	D.S.	7-79
Thickness	[illegible]	M.B.	6-82
Conc.	[illegible]	M.B.	5-86
Note 2	[illegible]	[illegible]	7-88

SAN DIEGO REGIONAL STANDARD DRAWING

SIDEWALK - TYPICAL SECTIONS

RECOMMENDED BY THE SAN DIEGO REGIONAL STANDARDS COMMITTEE

Allan A. Kashani — Dec. 1975
Coordinator R.C.E. 19807 — Date

DRAWING NUMBER G-7

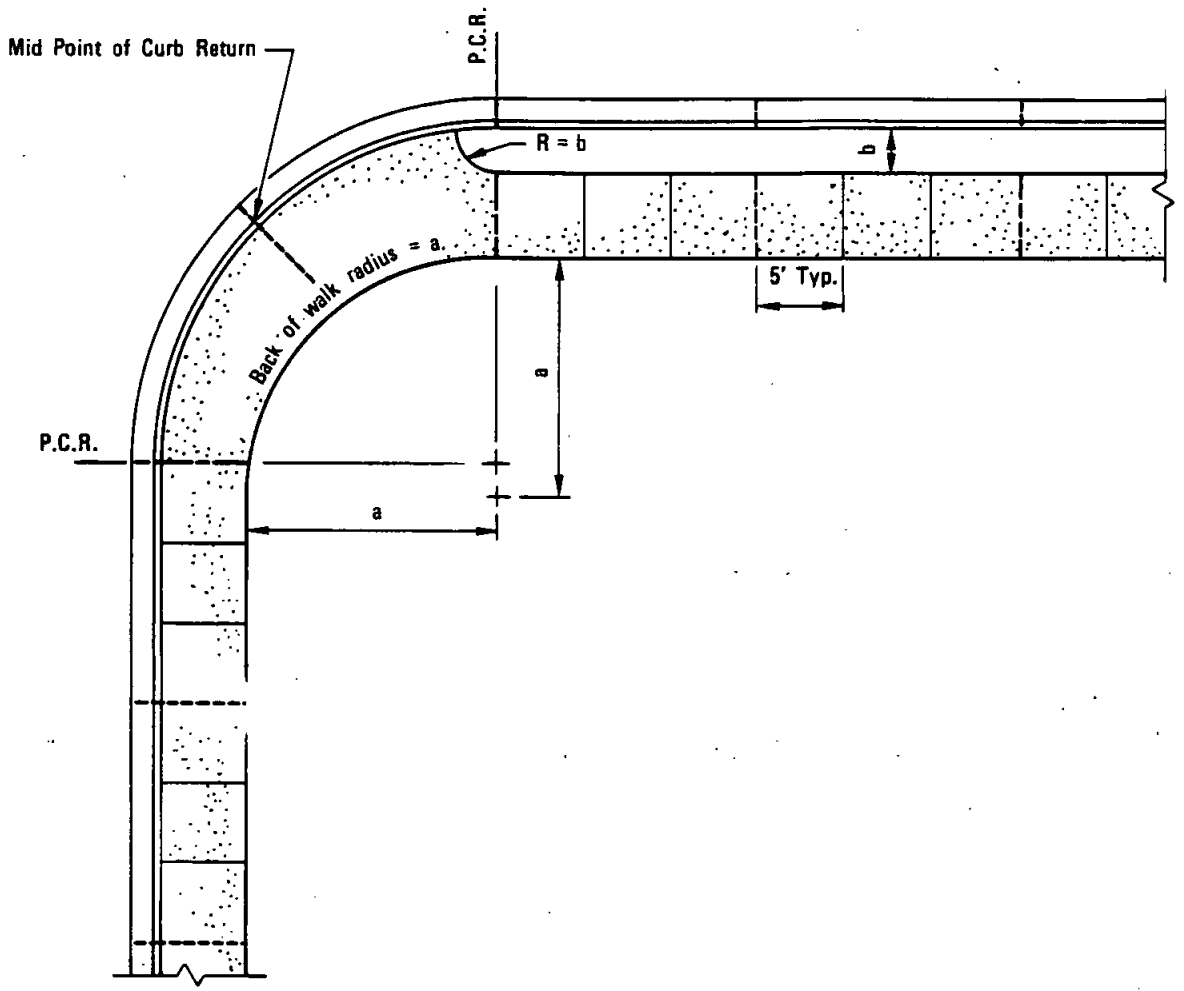

NOTES

1. Expansion Joints ———— at curb returns, adjacent to structures and at 45' intervals. (See Standard Drawing G-10).
2. Weakened Plane Joints - - - - - - at mid point of curb return, when required, and at 15' intervals from P.C.R.'s (See Standard Drawing G-10).
3. 1/4" grooves ———— with 1/4" radius edges at 5' intervals.

Revision	By	Approved	Date
Note 4	LC	M.B.	5-86

SAN DIEGO REGIONAL STANDARD DRAWING

SIDEWALK JOINT LOCATIONS

RECOMMENDED BY THE SAN DIEGO REGIONAL STANDARDS COMMITTEE

Coordinator R.C.E. 19807 — Dec. 1975 Date

DRAWING NUMBER G-9

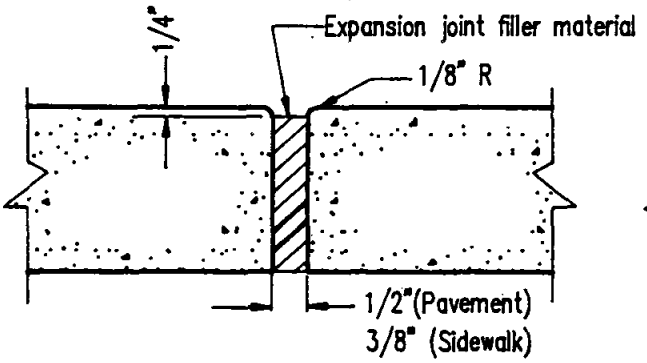

EXPANSION JOINT

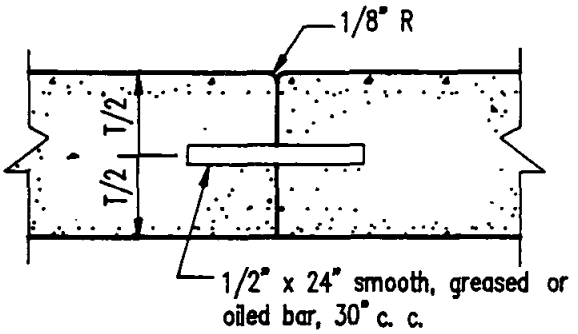

CONTACT JOINT

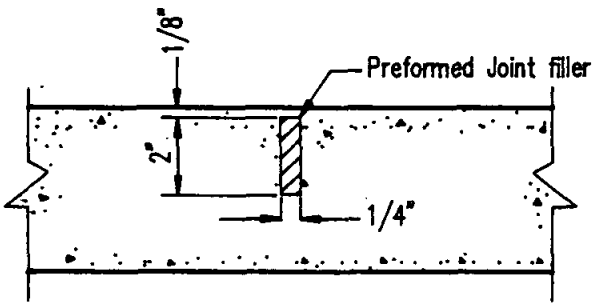

WEAKENED PLAN JOINT
GUTTER AND PAVEMENT

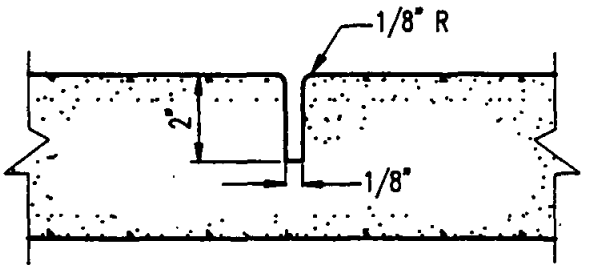

WEAKENED PLAN JOINT
CURB AND SIDEWALK

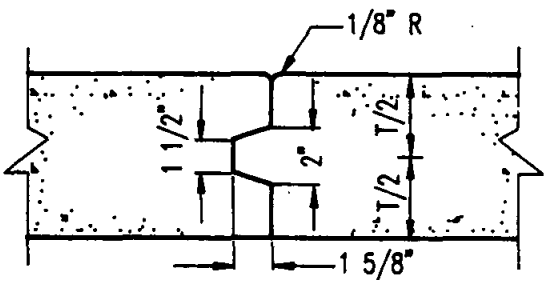

KEYED JOINT

RECOMMENDED BY THE SAN DIEGO REGIONAL STANDARDS COMMITTEE Chairman 5-11-92 Date RCE 25902	SAN DIEGO REGIONAL STANDARD DRAWING	Revision	By	Approved	Date
		Bar note	JP	G.A.	5 92
DRAWING NUMBER G-10	CONCRETE JOINT DETAILS				

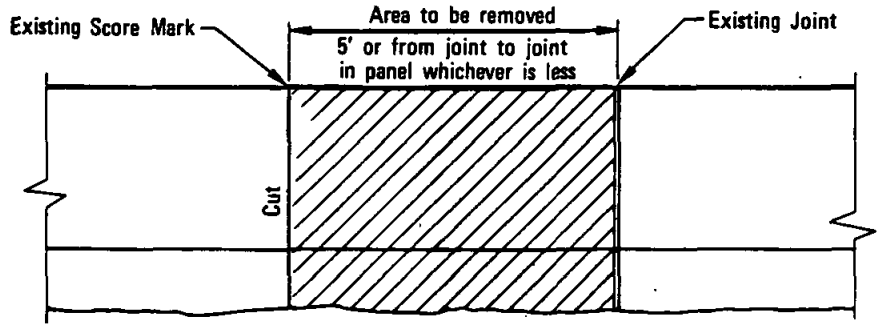

SIDEWALK PLAN

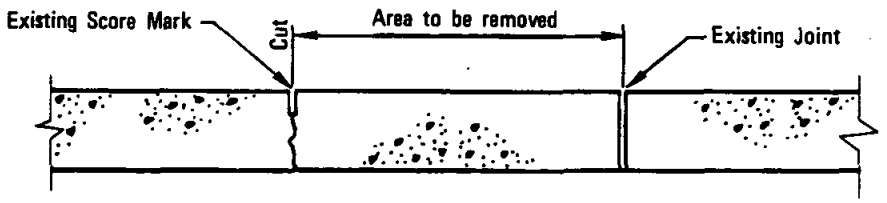

SIDEWALK SECTION

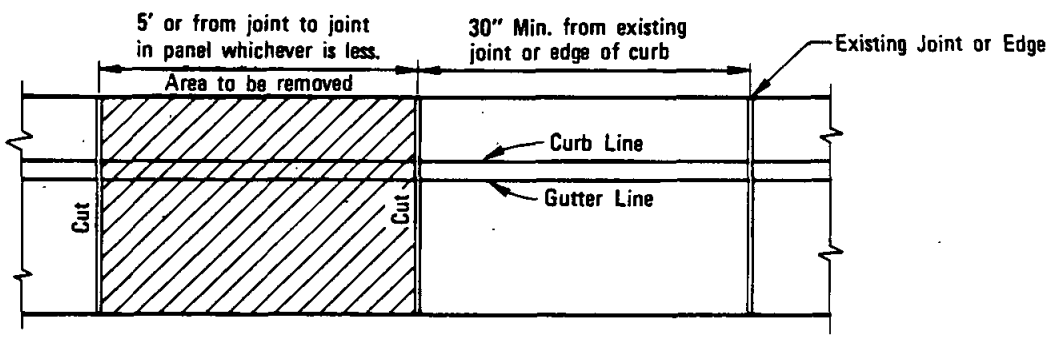

CURB PLAN

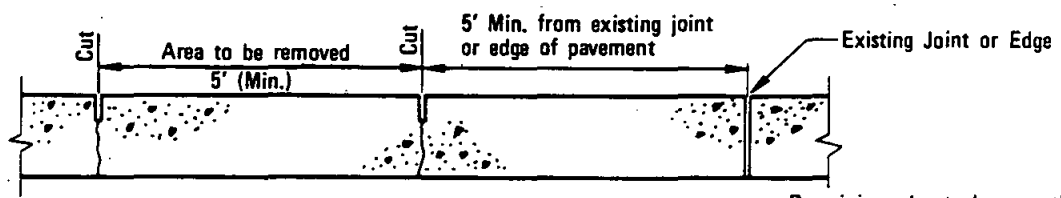

PAVEMENT SECTION

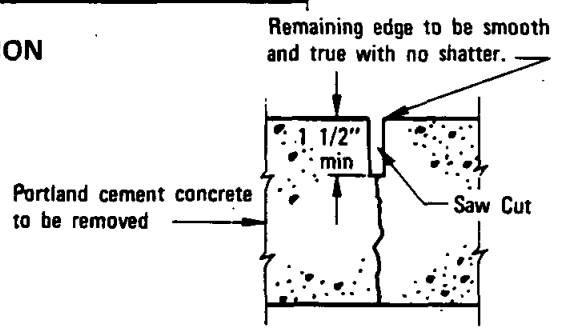

SECTION
Showing Cut

NOTE

When distance from, "Area to be removed", to existing joint, edge or score mark is less than minimum shown, "Area to be removed" shall be extended to that joint, edge or score mark.

Revision	By	Approved	Date
Pvmt. min.	[illegible]	M.B.	5-86
Notes	[illegible]	G.H.	9/88

SAN DIEGO REGIONAL STANDARD DRAWING

PORTLAND CEMENT CONCRETE CURB, GUTTER, SIDEWALK AND PAVEMENT REMOVAL AND REPLACEMENT

RECOMMENDED BY THE SAN DIEGO REGIONAL STANDARDS COMMITTEE

Allan A. Kerkeel — Dec. 1975
Coordinator R.C.E. 19807 — Date

DRAWING NUMBER G-11

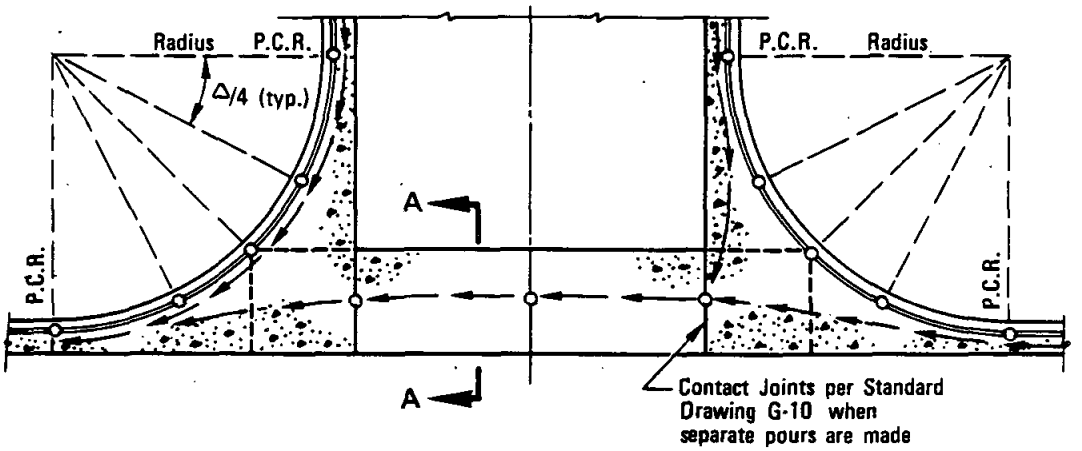

PLAN

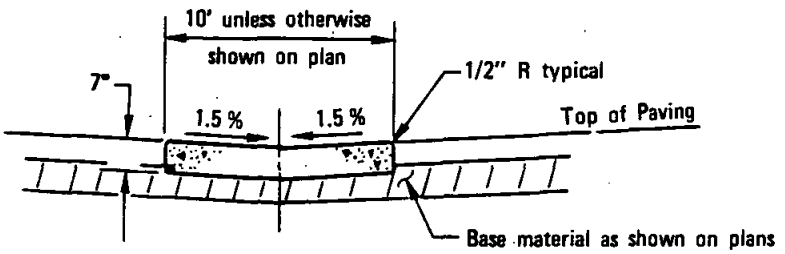

SECTION A–A

NOTES:

1. Concrete shall be 560-C-3250.
2. - - - - - - - - - - - - =Weakened plane joints.
3. ←——— ←——— =Typical flowlines.
4. o =Elevations to be shown on plans.
5. Return segments to be 7" Thick.
6. Curb between P.C.R.s shall be considered as part of cross gutter.
7. In all cases subgrade shall be compacted to 95% min relative compaction to a depth of 12".

LEGEND ON PLANS

RECOMMENDED BY THE SAN DIEGO REGIONAL STANDARDS COMMITTEE	SAN DIEGO REGIONAL STANDARD DRAWING	Revision	By	Approved	Date
Allan O Kenkel Dec. 1975		Thickness		O.S.	7-79
Coordinator R.C.E. 19807 Date		Note 1	TRP	M.B.	10-82
	CROSS GUTTER	Note 6		M.B.	5-86
DRAWING NUMBER G-12		Note 7		G.L.	5-92

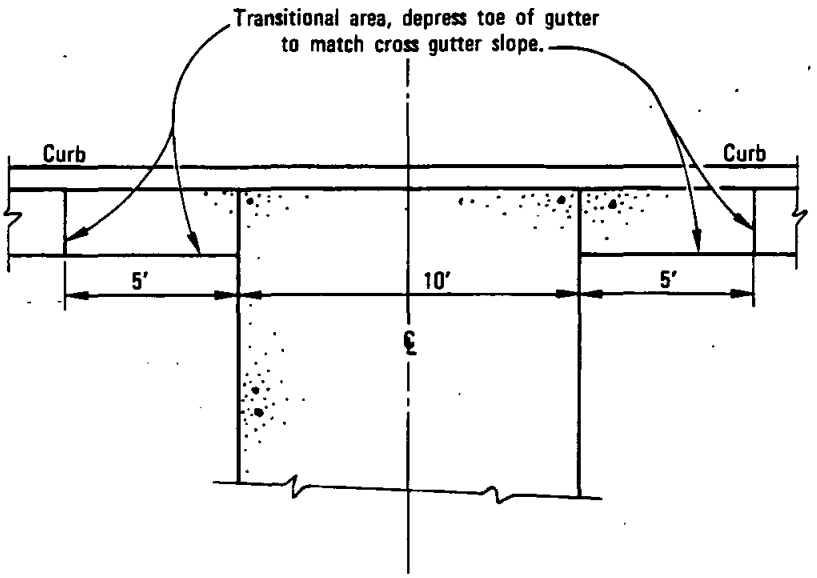

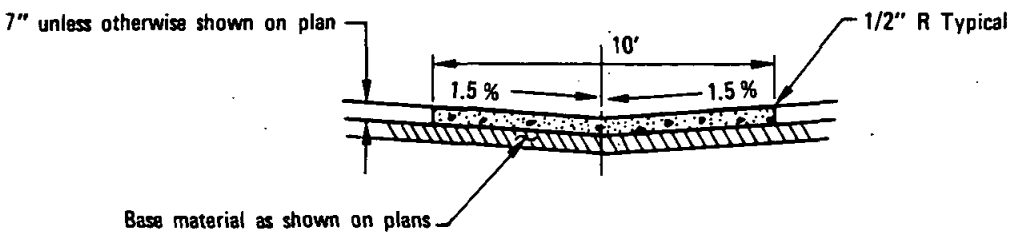

NOTES:

1. Cross gutter to be constructed where the drainage is carried across street.
2. Minimum allowable cross slope is 0.5 %.
3. Concrete shall be 560-C-3250.
4. In all cases subgrade shall be compacted to 95% minimum relative compaction to a depth of 12".

LEGEND ON PLANS

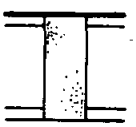

Revision	By	Approved	Date
Thickness	[illegible]	0.5	7-79
Conc.	TRP	M.B.	10-82
Thickness	JY	G.A.	5-92

SAN DIEGO REGIONAL STANDARD DRAWING

MID-BLOCK CROSS GUTTER

RECOMMENDED BY THE SAN DIEGO REGIONAL STANDARDS COMMITTEE

Allan A. Kashani — Dec. 1975

Coordinator R.C.E. 19807 — Date

DRAWING NUMBER G-13

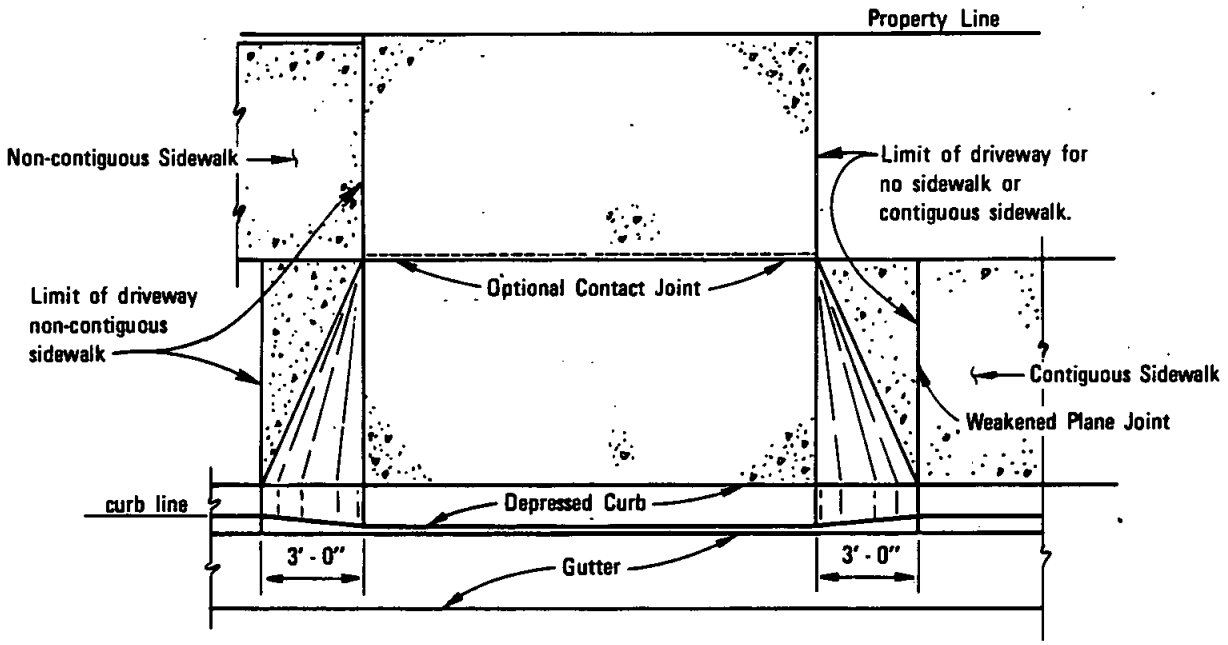

PLAN

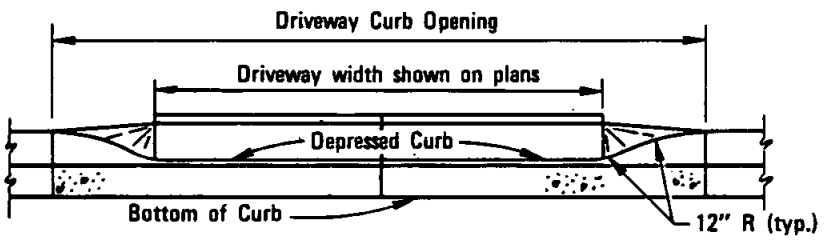

ELEVATION

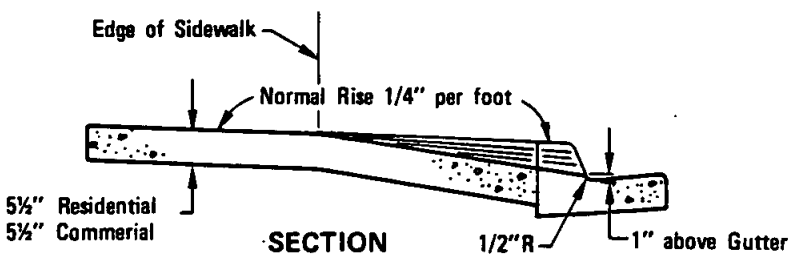

SECTION

NOTES

1. No concrete shall be placed until forms and subgrade are inspected by the Agency.
2. Concrete shall be 520-C-2500.
3. See standard drawings G-15 and G-16 for width and location requirements.
4. Driveway ramp to extend to 10 feet from curb face or to property line whichever is less. (For commercial driveways only)
5. See Standard Drawings G-2 and G-10 for curb and joint details.

LEGEND ON PLANS

℄ of — Residential (Commercial) Driveway

RECOMMENDED BY THE SAN DIEGO REGIONAL STANDARDS COMMITTEE

Allan A. Kershaw — Dec. 1975

Coordinator R.C.E. 19807 — Date

DRAWING NUMBER G-14

SAN DIEGO REGIONAL STANDARD DRAWING

CONCRETE DRIVEWAYS

Revision	By	Approved	Date
Thickness	JC	D.S.	7-79
Thickness	[illegible]	M.B.	6-82
Conc.	TRP	M.B.	10-82
Limits	[illegible]	M.B.	5-86
Notations	[illegible]	A.H.	7-88

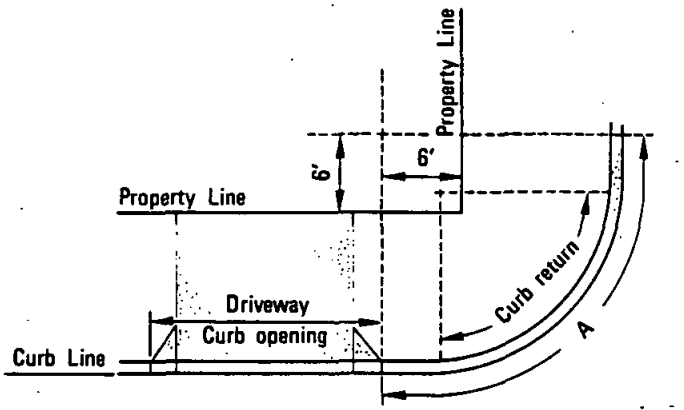

REQUIREMENT 1

No portion of any curb opening shall be permitted within 6' of the intersection of the prolonged property lines and the curb as shown by arc A.

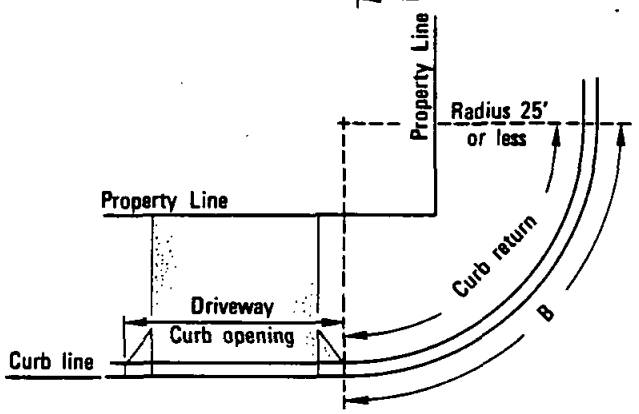

REQUIREMENT 2

No portion of any curb opening shall be permitted in the curb return where the radius of curb is 25' or less, as shown by arc B.

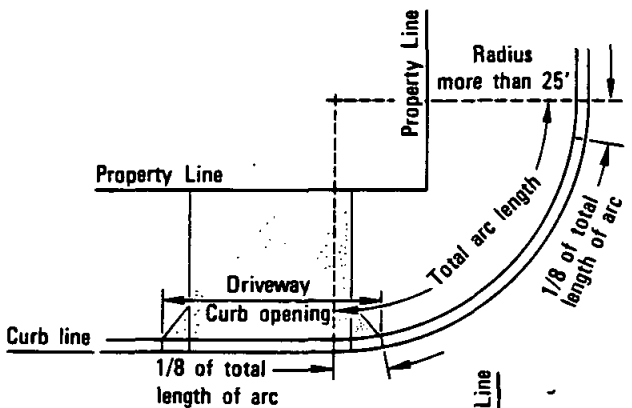

REQUIREMENT 3

On all curb returns where the radius is more than 25', curb openings may encroach upon each end of the return a distance equal to 12 1/2% or 1/8 of the total length of the arc on the curb return, thus leaving at least 75% of the length of arc on the return face free from driveway encroachment, provided Requirement 1 is met.

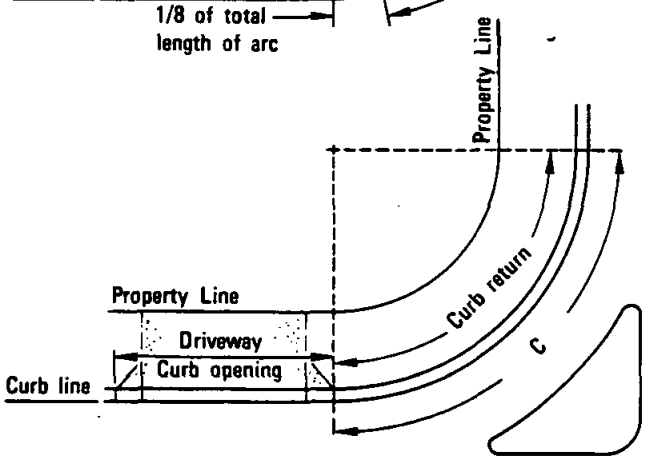

REQUIREMENT 4

No portion of any curb opening shall be permitted in the curb return where a seperate turning movement is provided, as shown by arc C

Revision	By	Approved	Date
Reqmt. 3	RC	M.B.	5-86

SAN DIEGO REGIONAL STANDARD DRAWING

DRIVEWAY LOCATION - ADJACENT TO CURB RETURNS AND STREET LINES

RECOMMENDED BY THE SAN DIEGO REGIONAL STANDARDS COMMITTEE

Allan A Kershaw — Dec. 1975

Coordinator R.C.E. 19807 — Date

DRAWING NUMBER G-15

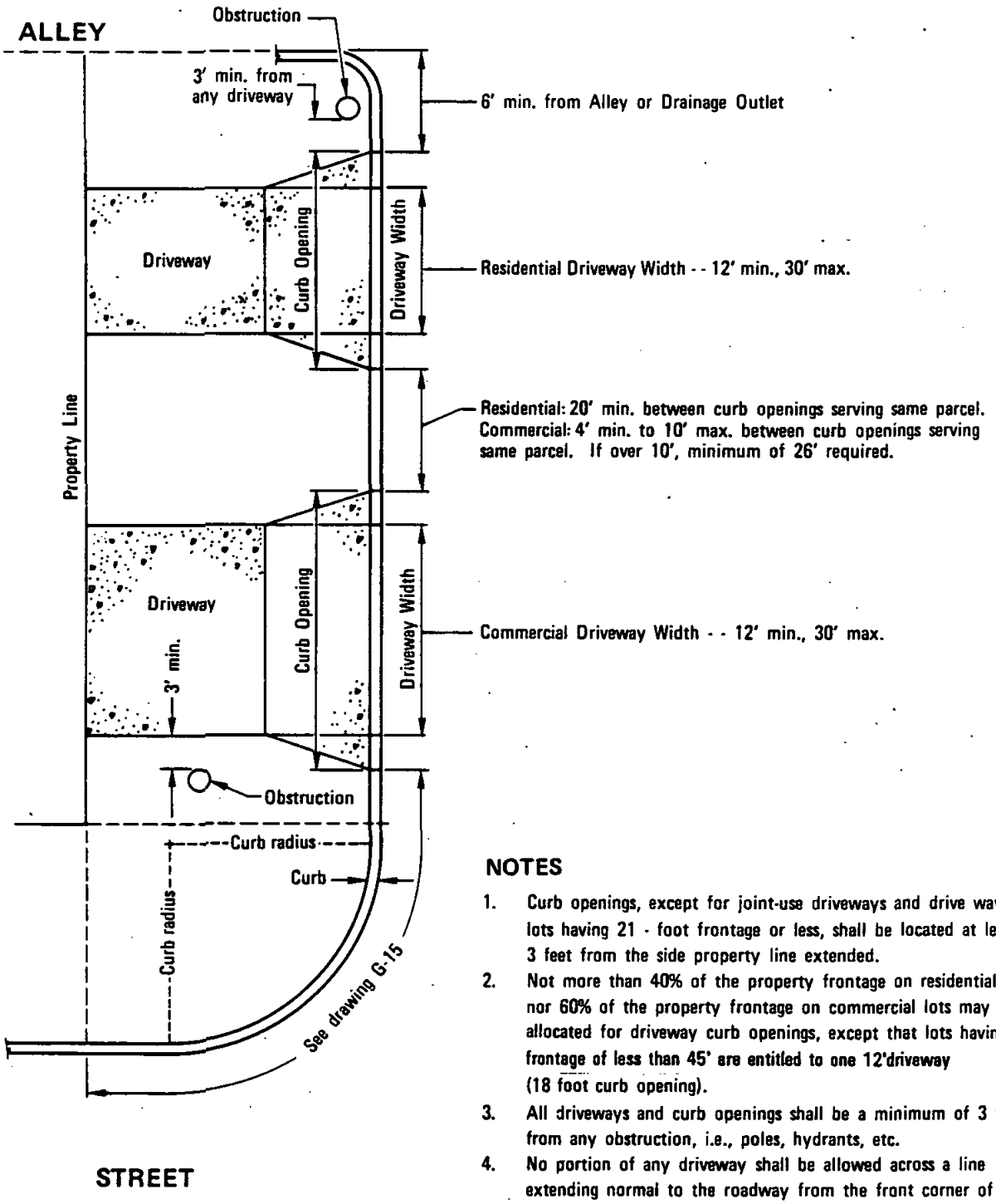

NOTES

1. Curb openings, except for joint-use driveways and drive ways on lots having 21 - foot frontage or less, shall be located at least 3 feet from the side property line extended.
2. Not more than 40% of the property frontage on residential lots, nor 60% of the property frontage on commercial lots may be allocated for driveway curb openings, except that lots having frontage of less than 45' are entitled to one 12'driveway (18 foot curb opening).
3. All driveways and curb openings shall be a minimum of 3 feet from any obstruction, i.e., poles, hydrants, etc.
4. No portion of any driveway shall be allowed across a line extending normal to the roadway from the front corner of the property, except that joint-use driveways may be permitted in special instances where written approval of both property owners is filed with the Agency.

RECOMMENDED BY THE SAN DIEGO REGIONAL STANDARDS COMMITTEE

Allan A. Kershaw — Dec. 1975
Coordinator R.C.E. 19807 — Date

DRAWING NUMBER G-16

SAN DIEGO REGIONAL STANDARD DRAWING

DRIVEWAY LOCATION AND WIDTH REQUIREMENTS

Revision	By	Approved	Date
Note 2	JP	[illegible]	5-92

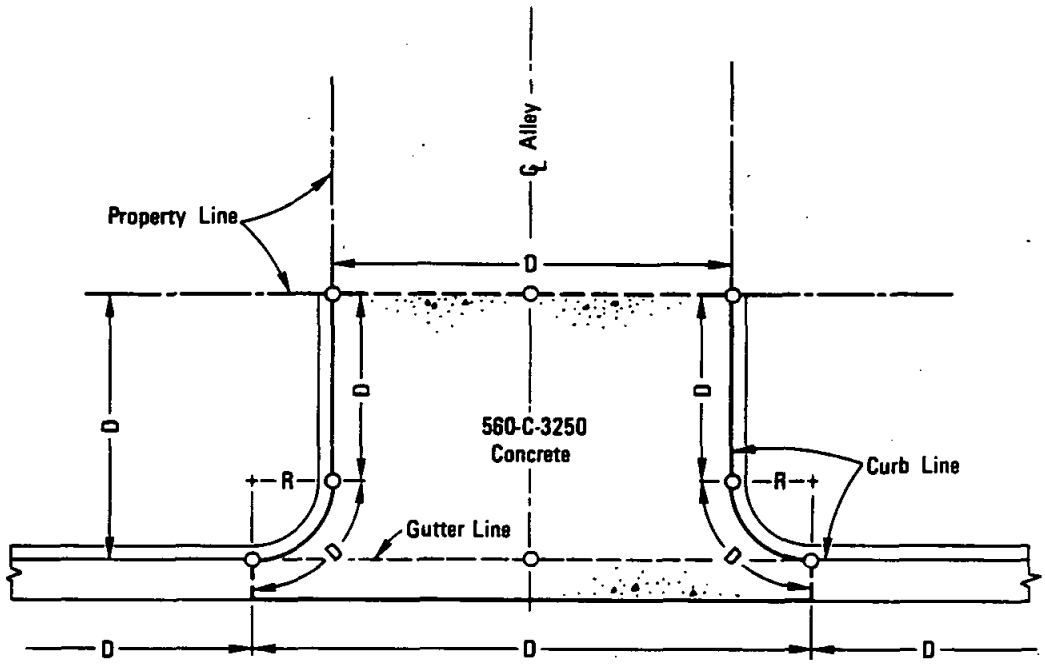

TYPICAL PLAN

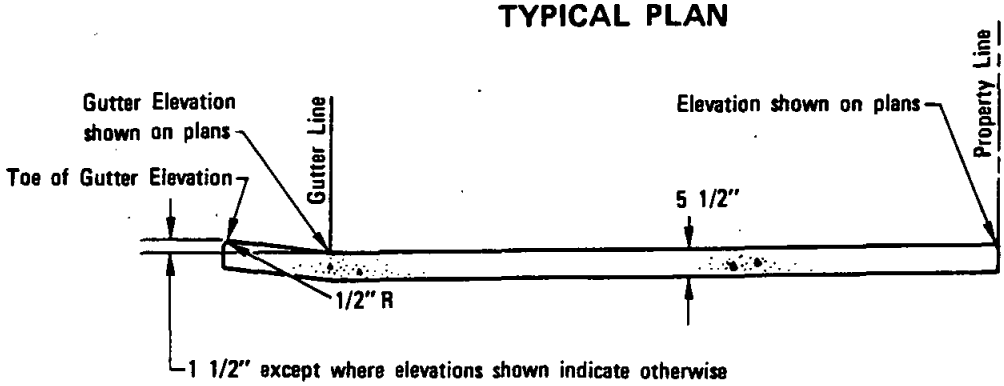

℄ SECTION

NOTES

1. Sidewalk ramps shall be installed as required by Agency.
2. D = distance shown on plans.
3. R = radius shown on plans (3 ft. minimum).
4. O = elevations shown on plans (top of curb, and gutter elev).
5. — — — = 1/2" expansion joints.

LEGEND ON PLANS

Revision	By	Approved	Date
Thickness	JC	D.S.	7.79
Conc.	JC	M.B.	5-86
Note 5	JC	G.H.	7-88

SAN DIEGO REGIONAL STANDARD DRAWING

ALLEY APRON

RECOMMENDED BY THE SAN DIEGO REGIONAL STANDARDS COMMITTEE

Allan O Kurland — Coordinator R.C.E. 19807 — Dec. 1975 Date

DRAWING NUMBER G-17

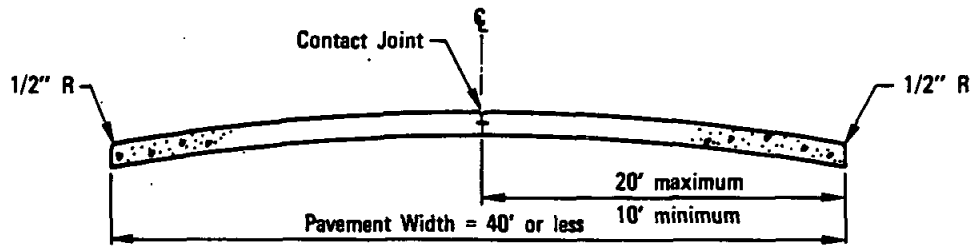

TYPICAL SECTION

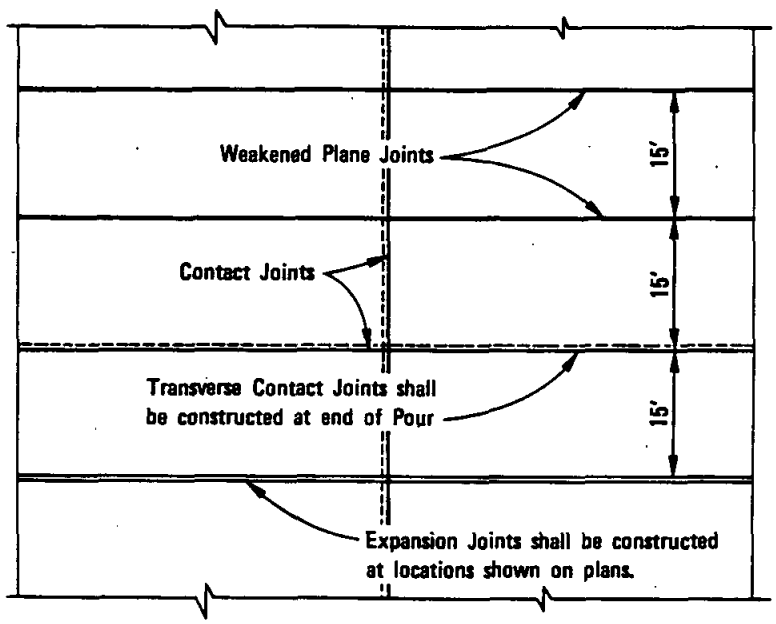

TYPICAL PLAN

NOTES

1. Concrete shall be 560-C-3250.
2. See Standard Drawing G-10 for joint details.
3. Adjust 15' interval between Transverse Joints to match adjacent existing improvements.

RECOMMENDED BY THE SAN DIEGO REGIONAL STANDARDS COMMITTEE Allan A. Kashani Dec. 1975 Coordinator R.C.E. 19807 Date	SAN DIEGO REGIONAL STANDARD DRAWING	Revision	By	Approved	Date
		Conc.	[illegible]	M.B.	5-86
DRAWING NUMBER G-18	CONCRETE PAVEMENT, WIDTH 40' OR LESS				

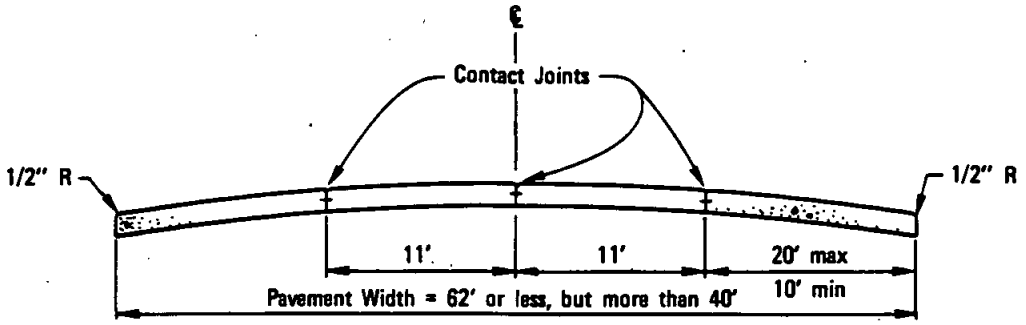

TYPICAL SECTION

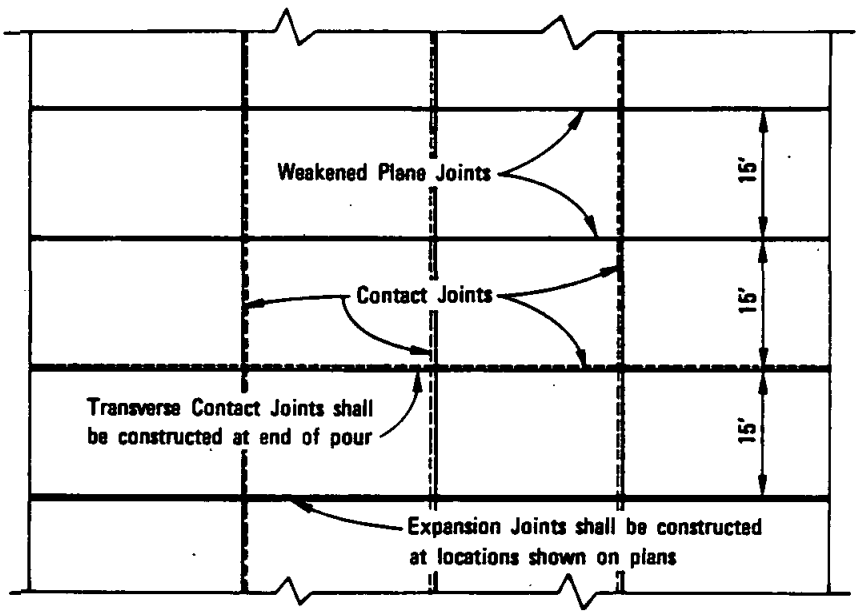

TYPICAL PLAN

NOTES

1. Concrete shall be 560-C-3250.
2. See Standard Drawing G-10 for joint details.
3. Adjust 15' interval between Transverse Joints to match adjacent existing improvements.

Revision	By	Approved	Date
Conc.	[illegible]	M.B.	5-86

SAN DIEGO REGIONAL STANDARD DRAWING

CONCRETE PAVEMENT WIDTH 40' TO 62'

RECOMMENDED BY THE SAN DIEGO REGIONAL STANDARDS COMMITTEE

Allen A. Kerchand — Coordinator R.C.E. 19807 — Dec. 1975 Date

DRAWING NUMBER G-19

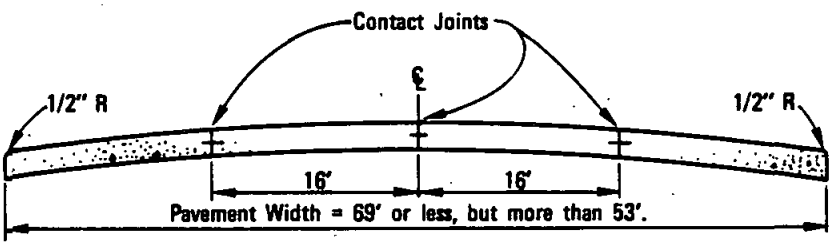

TYPICAL SECTION

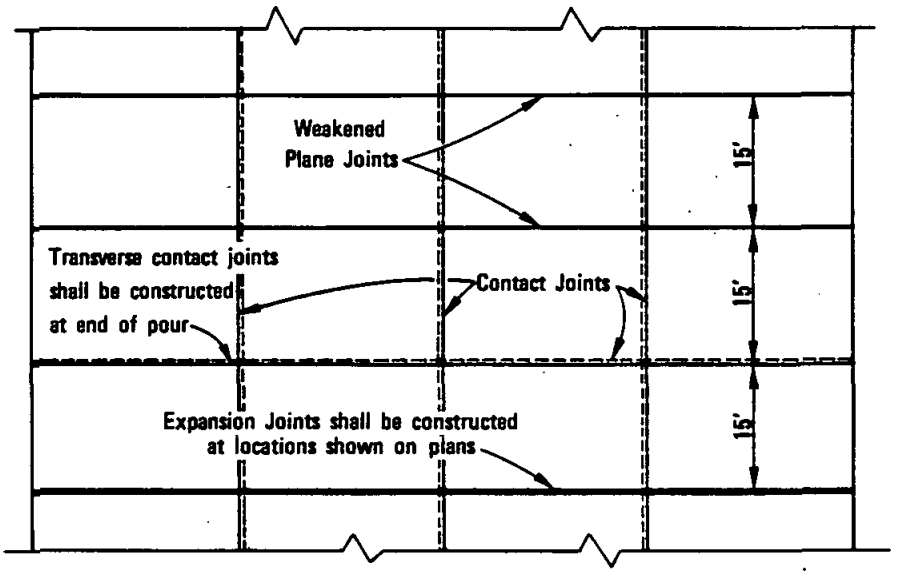

TYPICAL PLAN

NOTES

1. Concrete shall be 560-C-3250.
2. See Standard Drawing G-10 for Joint Details.
3. Adjust 15' interval between Transverse Joints to match adjacent existing improvements.

RECOMMENDED BY THE SAN DIEGO REGIONAL STANDARDS COMMITTEE Allan O Kaufman Dec. 1975 Coordinator R.C.E. 19807 Date	SAN DIEGO REGIONAL STANDARD DRAWING	Revision	By	Approved	Date
		Conc.		M.E.	5-86
DRAWING NUMBER G-20	CONCRETE PAVEMENT WIDTH 53' TO 69'				

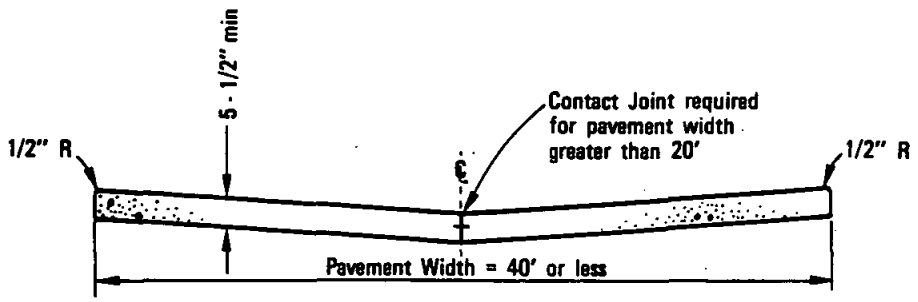

TYPICAL SECTION

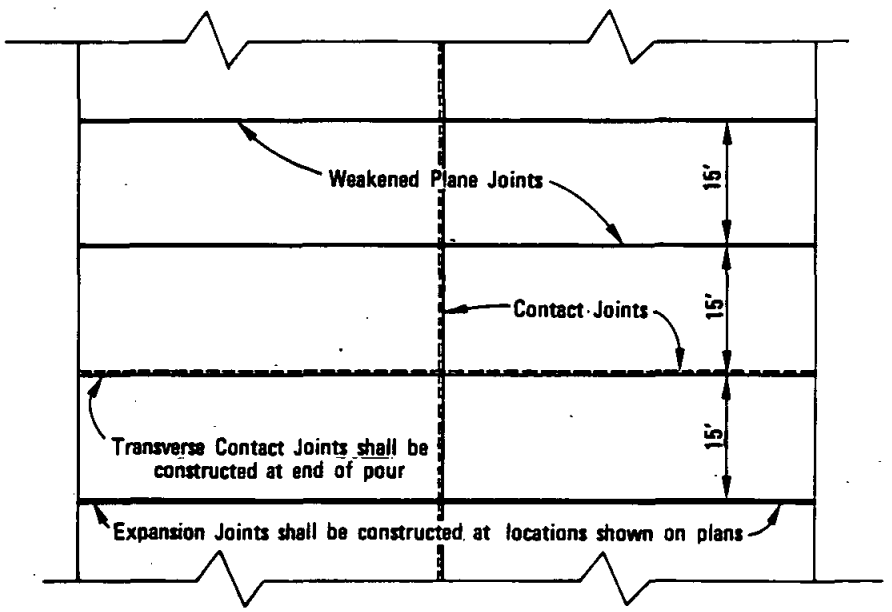

TYPICAL PLAN

NOTES

1. Concrete shall be 560-C-3250
2. See Standard Drawing G-10 for joint details.
3. Adjust 15' interval between Transverse Joints to match adjacent existing improvements.

Revision	By	Approved	Date
Conc.	[illegible]	M.A.	5-86

SAN DIEGO REGIONAL STANDARD DRAWING

CONCRETE PAVEMENT, ALLEY SECTION, WIDTH 40' OR LESS

RECOMMENDED BY THE SAN DIEGO REGIONAL STANDARDS COMMITTEE

Allan A. Kershaw — Dec. 1975
Coordinator R.C.E. 19807 — Date

DRAWING NUMBER G-21

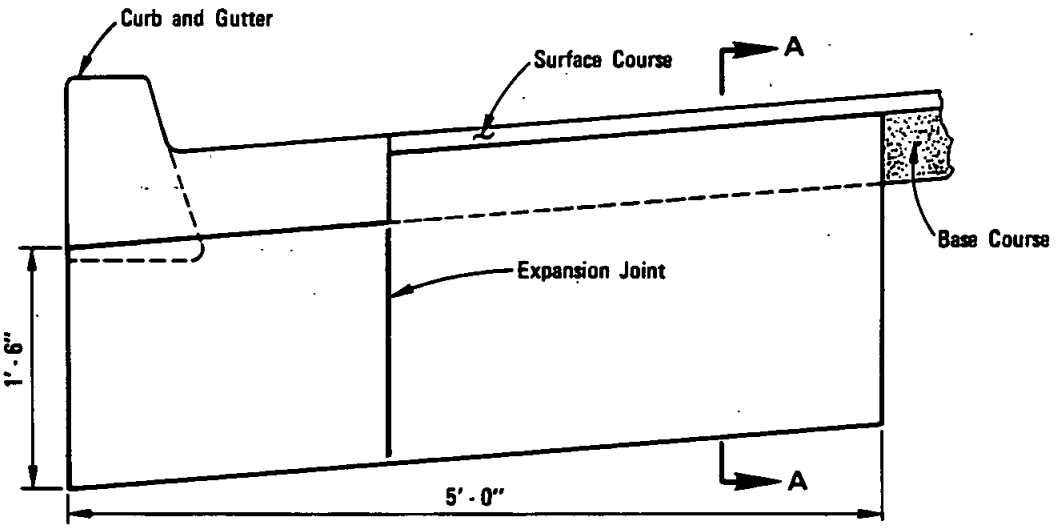

ELEVATION

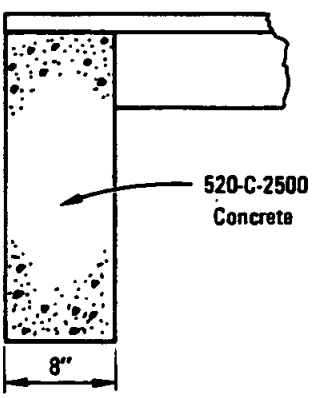

SECTION A–A

LEGEND ON PLANS

RECOMMENDED BY THE SAN DIEGO REGIONAL STANDARDS COMMITTEE Allan O. Kruckeberg Dec. 1975 Coordinator R.C.E. 19807 Date	SAN DIEGO REGIONAL STANDARD DRAWING	Revision	By	Approved	Date
		Conc.	R	MLB	5-86
DRAWING NUMBER G-22	CUTOFF WALL AT END OF PAVEMENT				

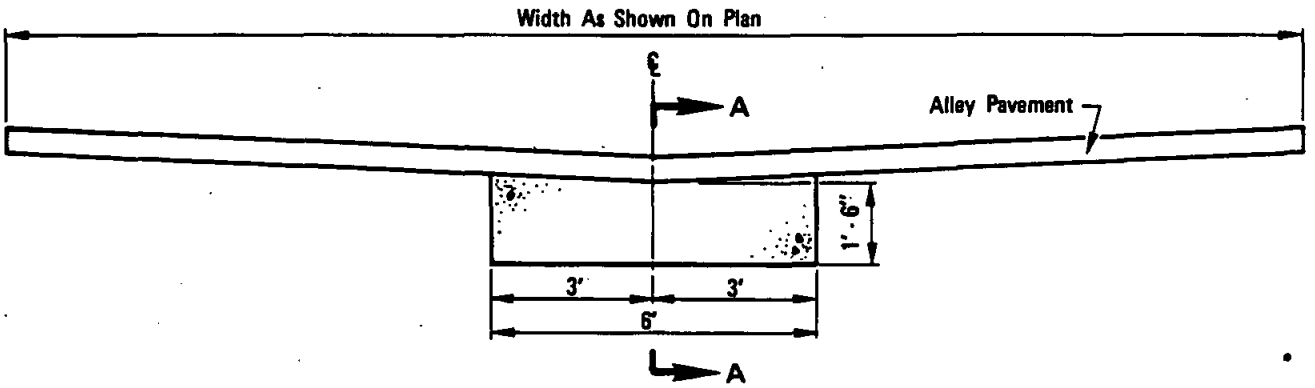

ELEVATION

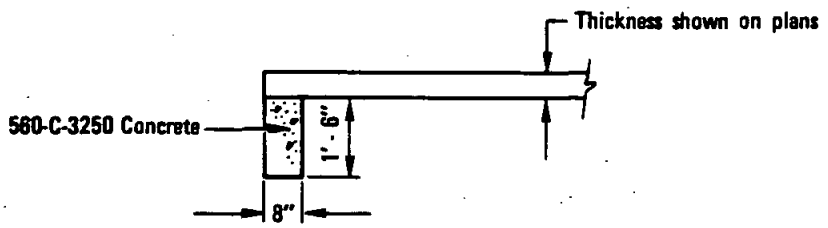

SECTION A–A

LEGEND ON PLANS

Revision	By	Approved	Date
Conc.		M.B.	5-86

SAN DIEGO REGIONAL STANDARD DRAWING

CUTOFF WALL AT END OF ALLEY PAVEMENT

RECOMMENDED BY THE SAN DIEGO REGIONAL STANDARDS COMMITTEE

Allen A. Kaufman — Dec. 1975

Coordinator R.C.E. 19807 — Date

DRAWING NUMBER G-23

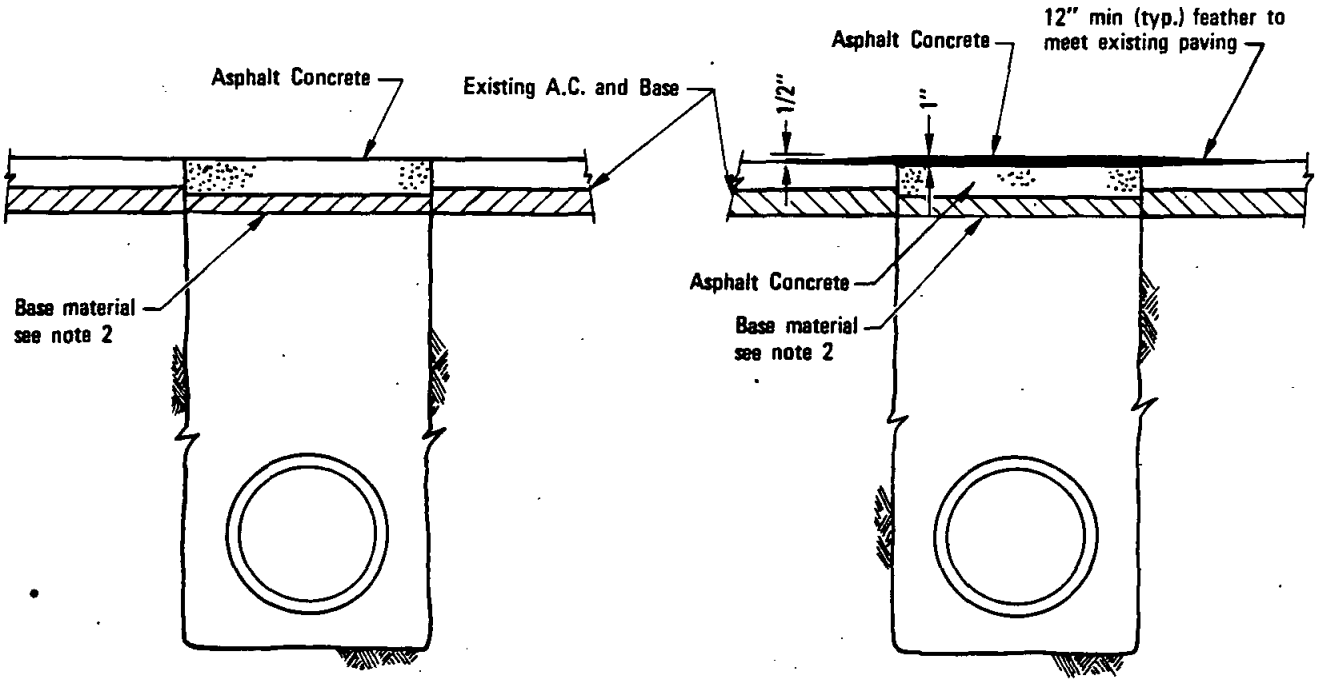

NOTES

1. Existing A.C. shall be cut and removed in such a manner so as not to tear, bulge or displace adjacent pavement. Edges shall be clean and vertical. All cuts shall be parallel or perpendicular to street centerline, when practical.
2. Base material to be replaced to depth of existing base. A.C. may be substituted for base material.
3. A tack coat of asphaltic emulsion or paving asphalt shall be applied to existing A.C. at all contact surfaces, prior to resurfacing.
4. Asphaltic Concrete Resurfacing:
   a) Minimum total thickness shall be one inch greater than existing A.C.
   b) A.C. shall be hot plant mix.
   c) Finish course for Type B resurfacing shall be laid down using a spreader box.
5. All A.C. resurfacing shall be seal coated with an emulsified asphalt and covered with sand. Chip sealing shall be applied as required by Agency.
6. Type B not to be used on lateral crossings.
7. Sloughing of trench under pavement shall be cause for requiring additional pavement and base.

RECOMMENDED BY THE SAN DIEGO REGIONAL STANDARDS COMMITTEE Allan A. Kenkel Dec. 1975 Coordinator R.C.E. 19807 Date	SAN DIEGO REGIONAL STANDARD DRAWING	Revision	By	Approved	Date
		Overcut	JRP	M.B.	10-82
DRAWING NUMBER G-24	TRENCH RESURFACING TYPES A & B				

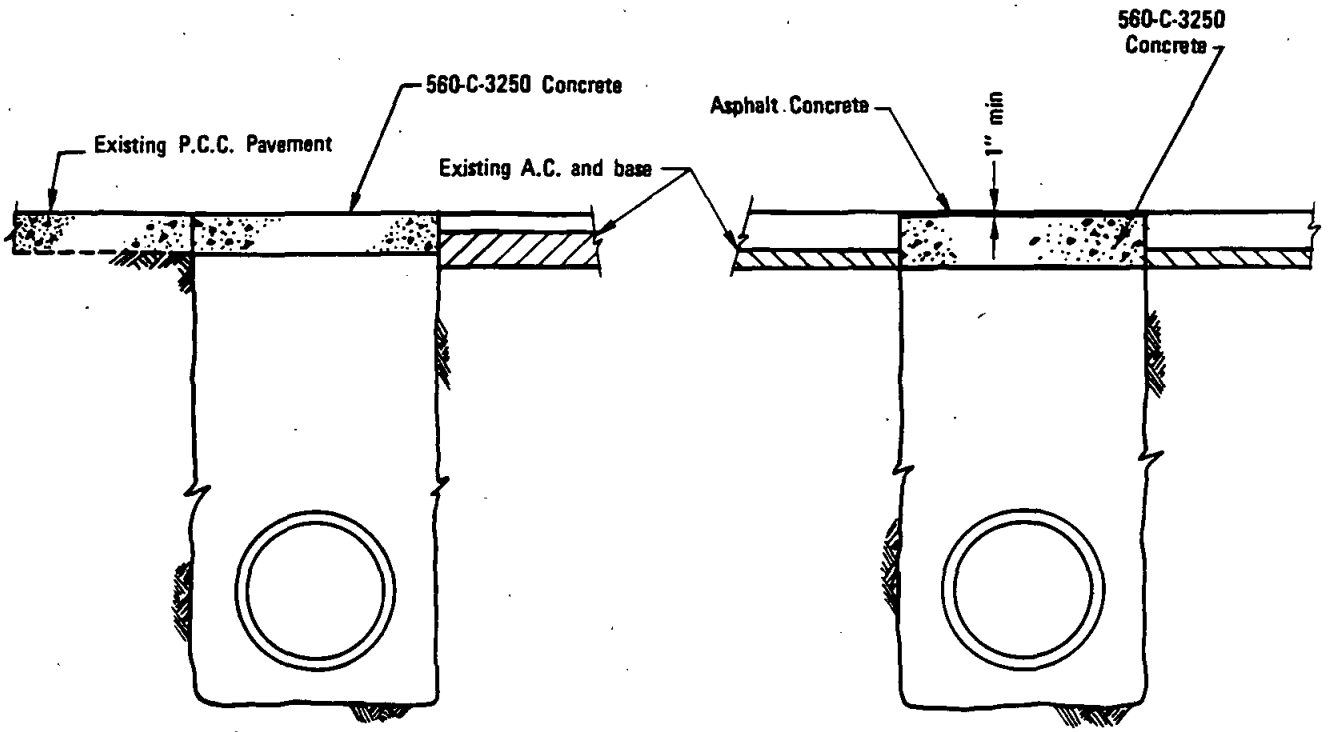

TYPE–C

TYPE–D

GENERAL NOTES

1. Existing A.C. shall be cut and removed in such a manner so as not to tear, bulge or displace adjacent pavement. Edges shall be clean and vertical. All cuts shall be parallel or perpendicular to street centerline, when practical.
2. Sloughing of trench under pavement shall be cause for requiring additional pavement and base.

NOTES TYPE–C

1. Concrete shall be colored black where required to match existing pavement. Method to be specified by Agency.
2. Minimum concrete thickness:
   Alleys and local residential street——————5 inches
   Major streets and highway——————7 inches
   Trench resurfacing in P.C.C. pavement shall have the above minimum thickness or match the existing concrete thickness plus one inch whichever is greater.

NOTES TYPE–D

1. A.C. shall be hot plant mix.
2. A tack coat of asphaltic emulsion or paving asphalt shall be applied to the existing A.C. at all contact surfaces and to the portland concrete prior to placing the new A.C.
3. A.C. resurfacing shall be seal coated with an emulsified asphalt and covered with sand. Chip sealing shall be applied as required by Agency.

Revision	By	Approved	Date
Overcut	TRP	M.B.	10-82
Conc.	SP	M.B.	5-86

SAN DIEGO REGIONAL STANDARD DRAWING

TRENCH RESURFACING TYPES C & D

RECOMMENDED BY THE SAN DIEGO REGIONAL STANDARDS COMMITTEE

Allan O Kaufman — Dec. 1975
Coordinator R.C.E. 19807 — Date

DRAWING NUMBER G-25

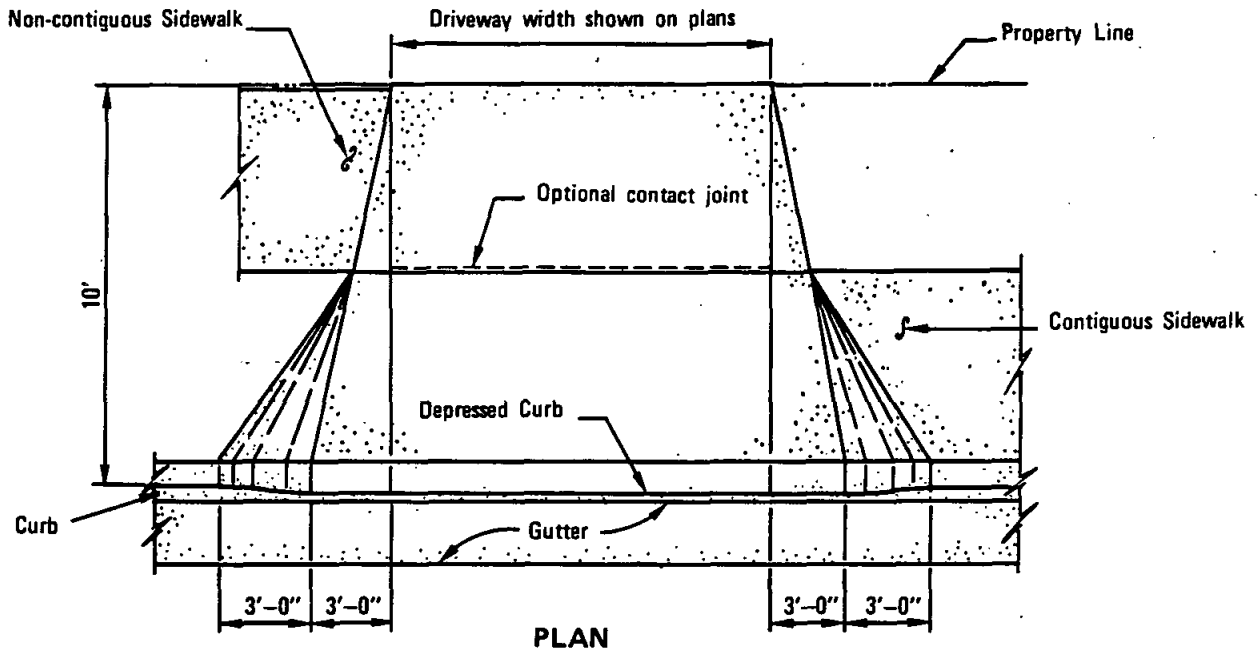

PLAN

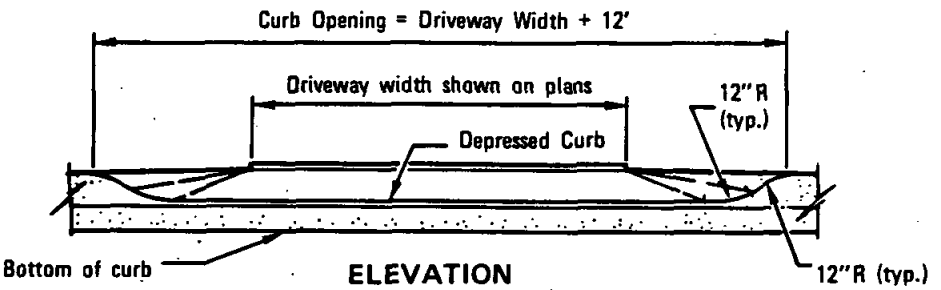

ELEVATION

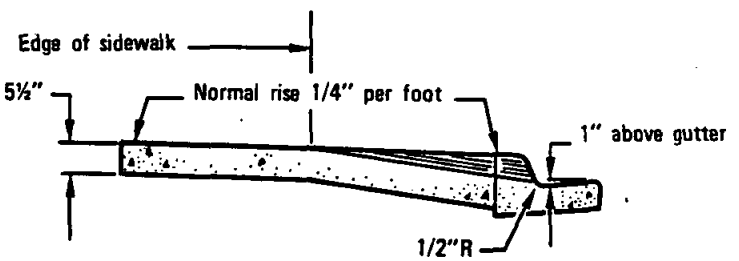

SECTION

NOTES

1. No concrete shall be placed until forms and subgrade are inspected by the Agency.
2. Concrete shall be 520-C-2500.
3. See Standard Drawing G-15 and G-16 for width and location requirements.
4. See Standard Drawings G-2 and G-10 for curb and joint details.

LEGEND ON PLANS

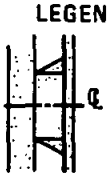

℄ of Alt. Commercial Driveway

RECOMMENDED BY THE SAN DIEGO REGIONAL STANDARDS COMMITTEE

Harry R. Holt Oct. 1982

Chairman R.C.E. C13768 Date

DRAWING NUMBER G-26

SAN DIEGO REGIONAL STANDARD DRAWING

CONCRETE DRIVEWAY COMMERCIAL ALTERNATE

Revision	By	Approved	Date
Conc.	[illegible]	M.B.	5-86
Note 4	[illegible]	A.H.	7-88

X	Y	Z	CT
Curb Height	Ramp Length	Side Slope	Curb Transition
1"	0' - 6"	1' - 6"	0' - 0"
2"	1' - 6"	1' - 6"	0' - 0"
3"	2' - 6"	1' - 8"	0' - 0"
4"	3' - 6"	2' - 4"	0' - 0"
5"	4' - 6"	3' - 0"	0' - 0"
6"	5' - 6"	3' - 0"	0' - 0"
7"	5' - 6"	3' - 0"	1' - 0"
8"	5' - 6"	3' - 0"	2' - 0"

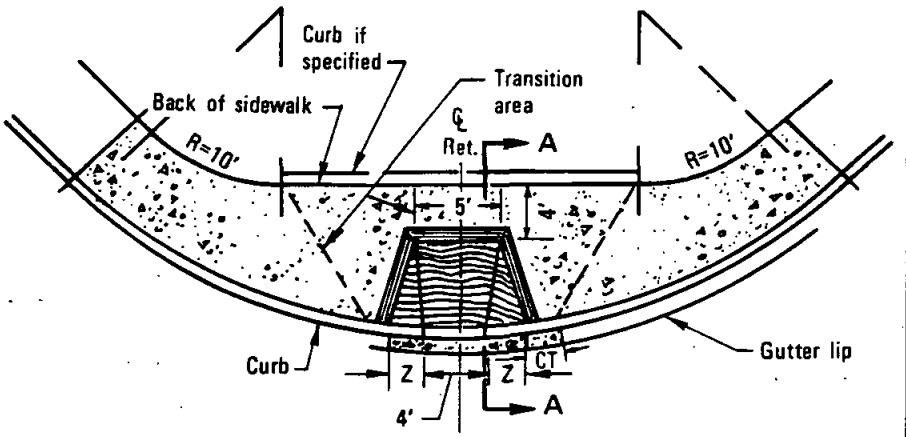

TYPE A

CONSTRUCTION NOTES

1. Set false header for back of ramp at curb height above gutter grade to maximum 6".
2. Where shown on the plans, construct monolithic curb for retention of street drainage or to meet adjacent improvements.

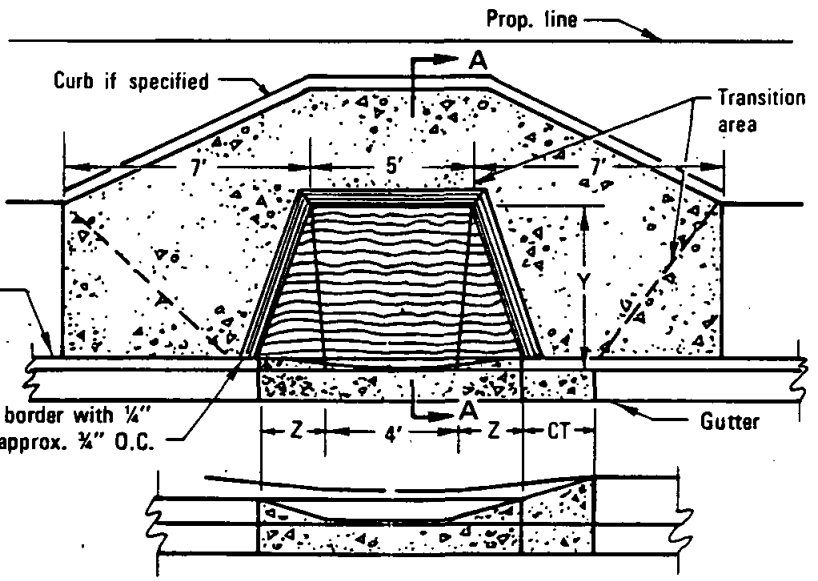

TYPE B

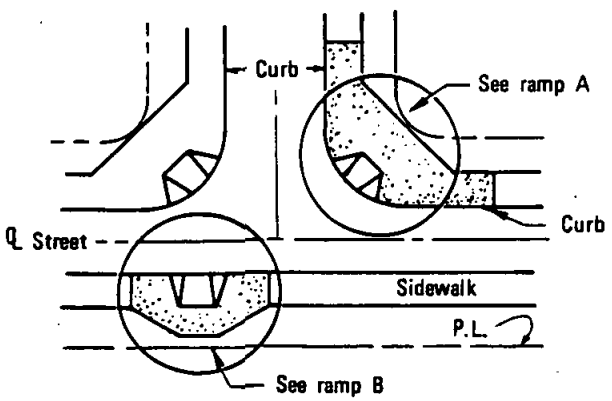

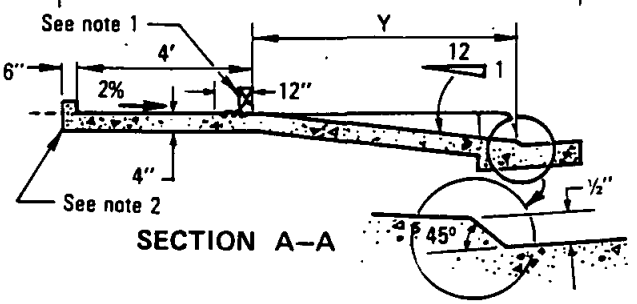

SECTION A–A

NOTE

See Standard Drawing G-32 for general notes.

Revision	By	Approved	Date
Notes		A.H.	9/88

SAN DIEGO REGIONAL STANDARD DRAWING

PEDESTRIAN RAMP TYPES A AND B (NEW CONSTRUCTION)

RECOMMENDED BY THE SAN DIEGO REGIONAL STANDARDS COMMITTEE

M. B. 4-25-86

Coordinator R.C.E. C21133 Date

DRAWING NUMBER G-27

X	Y	Z
Curb Height	Ramp Length	Side Slope
1"	0' - 8"	1' - 6"
2"	2' - 0"	1' - 6"
3"	3' - 4"	1' - 8"
4"	4' - 8"	2' - 4"
5"	6' - 0"	3' - 0"
6"	7' - 4"	3' - 0"
7"	8' - 7"	3' - 0"
8"	9' - 11"	3' - 0"

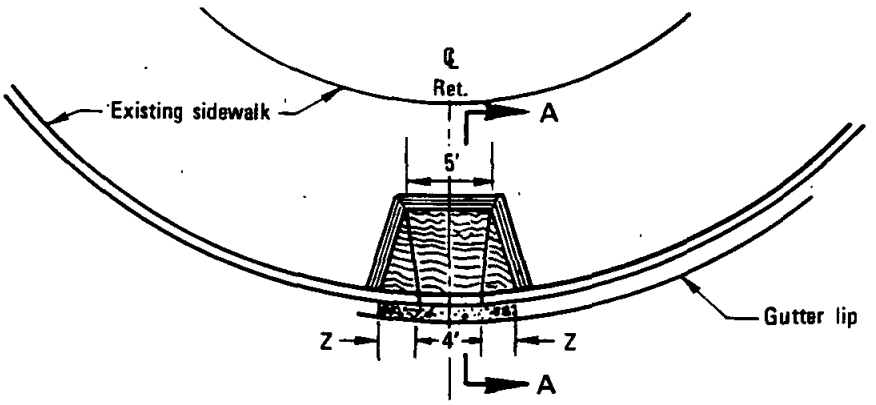

TYPE A–I

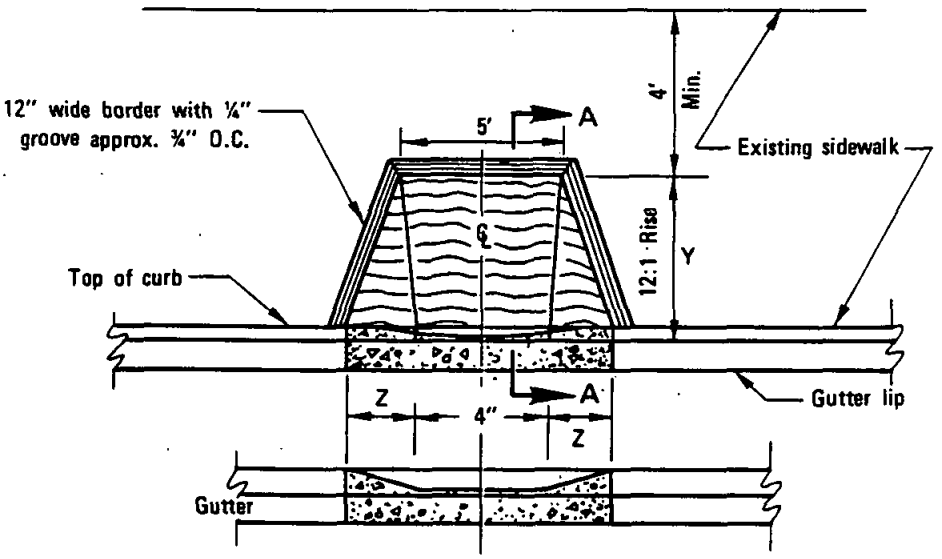

TYPE B–I

NOTES

1. See Standard Drawing G-32 for general notes.
2. If inadequate space exists in existing sidewalk to provide 4' minimum behind ramp use Standard Drawing G-30.

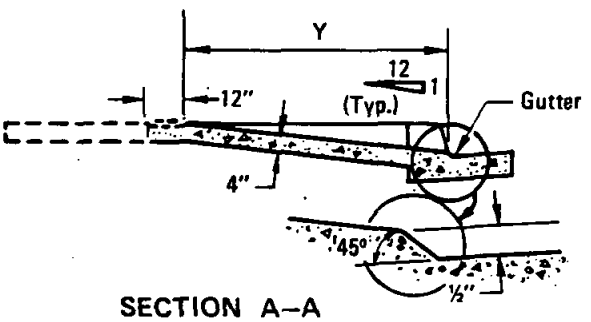

SECTION A–A

RECOMMENDED BY THE SAN DIEGO REGIONAL STANDARDS COMMITTEE

M. Bahmani 4-25-86

Coordinator R.C.E. C21133 Date

DRAWING NUMBER G-28

SAN DIEGO REGIONAL STANDARD DRAWING

PEDESTRIAN RAMP TYPES A-1 AND B-1 (IN EXISTING SIDEWALK)

Revision	By	Approved	Date
NOTES	JC	[illegible]	3-88
TITLE	JP	[illegible]	5-92

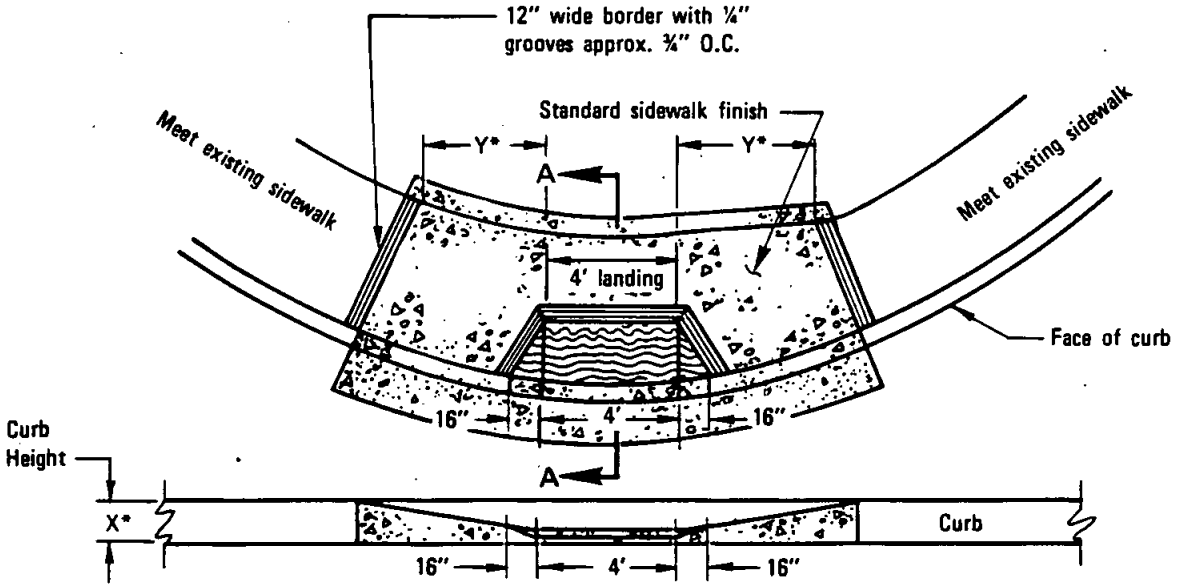

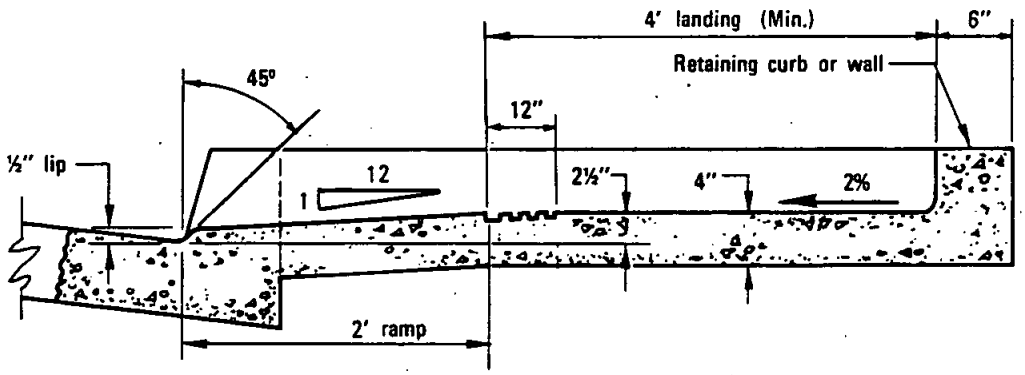

SECTION A–A

NOTES

1. Type C ramps are only to be used to mitigate existing conditions where inadequate right of way exists to use standard drawing G-27, G-28 or G-30 and are not to be used in new construction.
2. See Standard Drawing G-32 for general notes.

X* Curb Height	Y* Ramp Length
4"	1' - 6"
5"	2' - 6"
6"	3' - 6"
7"	4' - 6"
8"	5' - 6"
9"	6' - 6"
10"	7' - 6"
11"	8' - 6"
12"	9' - 6"
13"	10' - 6"

Revision	By	Approved	Date
NOTES	JC	A.H.	8-88
Y* dim.	JP	[illegible]	5-90

SAN DIEGO REGIONAL STANDARD DRAWING

PEDESTRIAN RAMP TYPE C

RECOMMENDED BY THE SAN DIEGO REGIONAL STANDARDS COMMITTEE

[illegible] 4-25-86

Coordinator R.C.E. C21133 Date

DRAWING NUMBER G-29

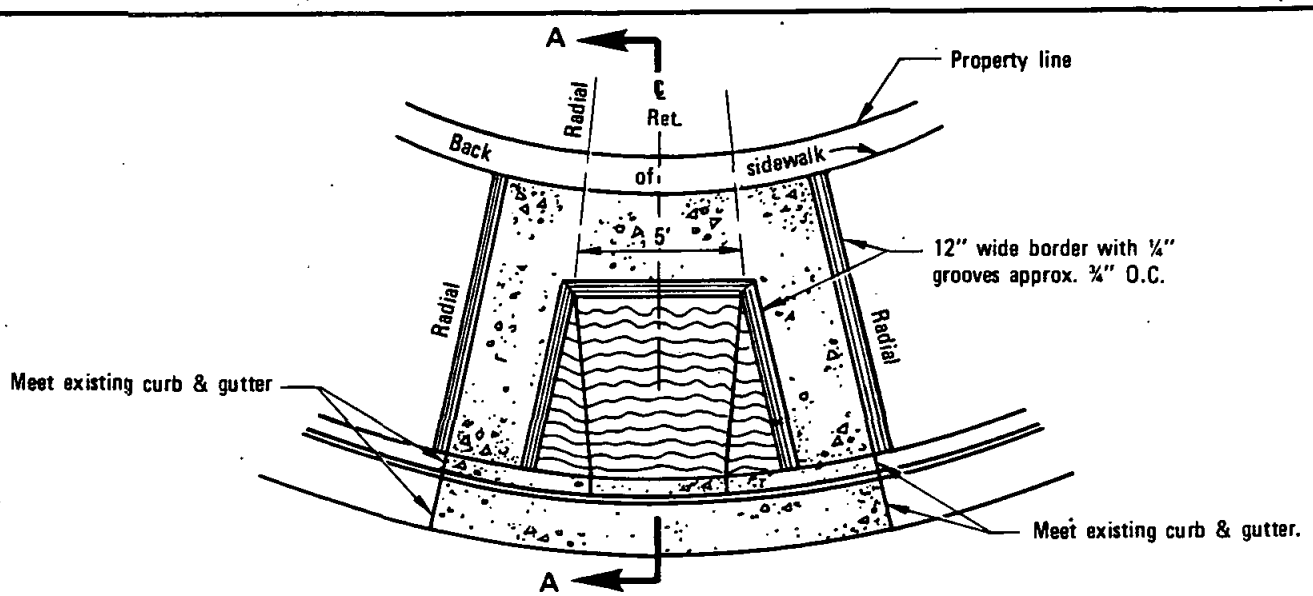

PLAN

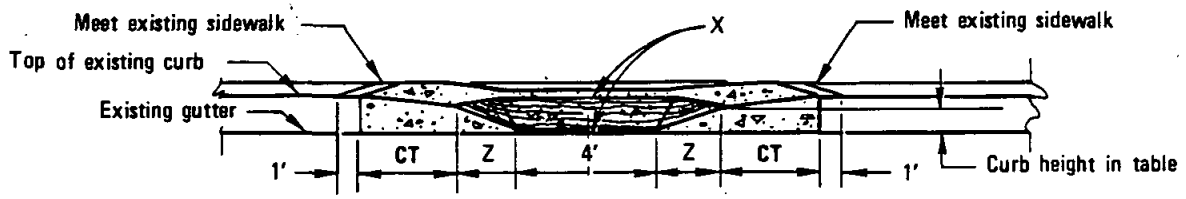

ELEVATION

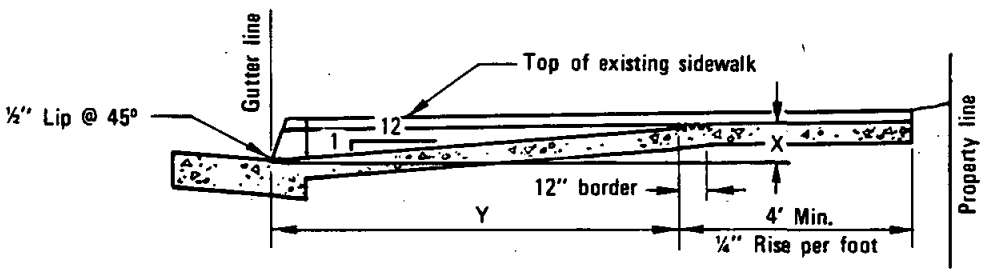

SECTION A–A

NOTES

1. See Standard Drawing G-32 for general notes.
2. See Standard Drawing G-27 for dimensions X, Y, Z, CT.

RECOMMENDED BY THE SAN DIEGO REGIONAL STANDARDS COMMITTEE M. Behnke 4-25-86 Coordinator R.C.E. C21133 Date	SAN DIEGO REGIONAL STANDARD DRAWING	Revision	By	Approved	Date
		NOTES	SC	GH	8-88
DRAWING NUMBER G-30	PEDESTRIAN RAMP TYPE C-1 (IN EXISTING SIDEWALK)				

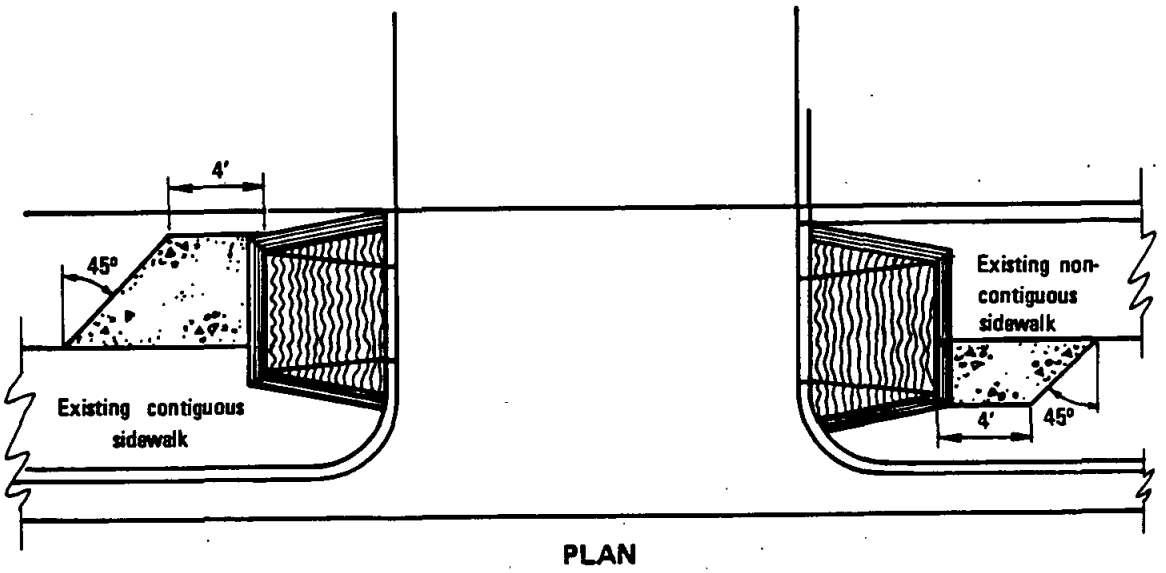

PLAN

X Curb Height	Y Ramp Length	Z Side Slope
2.0"	1' - 6"	1' - 0"
2.5"	2' - 0"	1' - 4"
3.0"	2' - 6"	1' - 8"
3.5"	3' - 0"	2' - 0"
4.0"	3' - 6"	2' - 4"
4.5"	4' - 0"	2' - 8"
5.0"	4' - 6"	3' - 0"
5.5"	5' - 0"	3' - 0"
6.0"	5' - 6"	3' - 0"
6.5"	6' - 0"	3' - 0"
7.0"	6' - 6"	3' - 0"
7.5"	7' - 0"	3' - 0"
8.0"	7' - 6"	3' - 0"

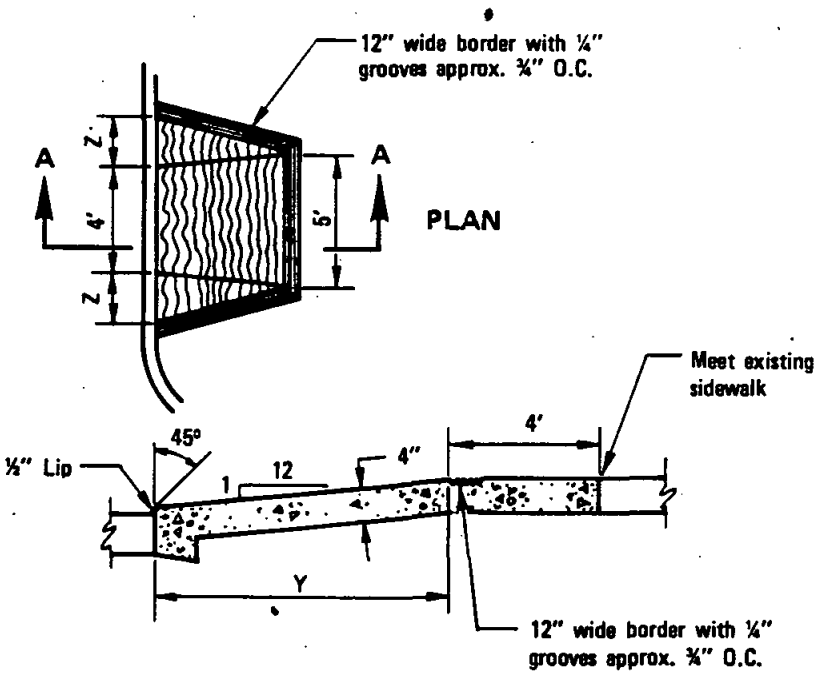

SECTION A–A

NOTE

See Standard Drawing G-32 for general notes.

Revision	By	Approved	Date

SAN DIEGO REGIONAL STANDARD DRAWING

PEDESTRIAN RAMP TYPE D

RECOMMENDED BY THE SAN DIEGO REGIONAL STANDARDS COMMITTEE

M. Baker 4-25-86

Coordinator R.C.E. C21133 Date

DRAWING NUMBER G-31

1. Pedestrian ramps shown on Standard Drawings G-27 through G-30 do not conform to the requirements of the State Building Code (Part 2, Title 24, C.A.C.) and are not recommended for use on projects with Federal or State funding.

2. Areas shown thus: Shall have a heavy broom "ripple" texture finish, transverse to axis of ramp.

3. Areas shown thus: Are the minimum required for a complete ramp installation and shall be concrete class 520-C-2500.

4. When pedestrian ramps are installed in or adjacent to existing colored concrete, the new ramp shall be tinted to match existing concrete color.

5. The removal of existing concrete curb, gutter, sidewalk and pavement for pedestrian ramp installation shall comply with San Diego Regional Standard Drawing G-11.

6. If obstructions such as inlets, utility poles, fire hydrants, etc., are encountered, the ramp locations may be adjusted upon the approval of the Engineer.

7. Where shown on plans, construct herringbone grooves 1/4" deep x 1/4" wide, 1-1/2" apart. Grooves shall be aligned parallel to crosswalk stripes to direct blind pedestrians into appropriate crosswalk.

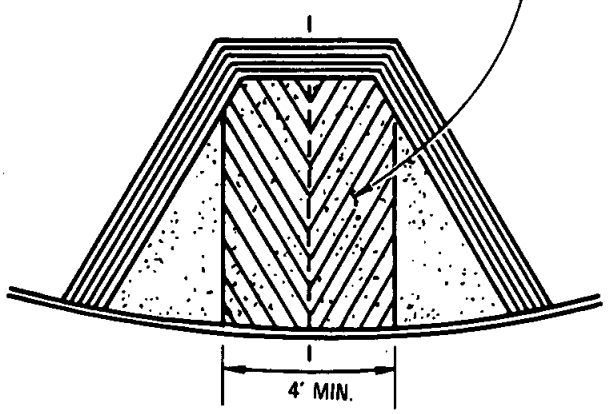

RECOMMENDED BY THE SAN DIEGO REGIONAL STANDARDS COMMITTEE M. Bahmanyar 4-25-86 Coordinator R.C.E. C21133 Date	SAN DIEGO REGIONAL STANDARD DRAWING	Revision	By	Approved	Date
		Note 7			9/88
DRAWING NUMBER G-32	GENERAL NOTES FOR PEDESTRIAN RAMP				

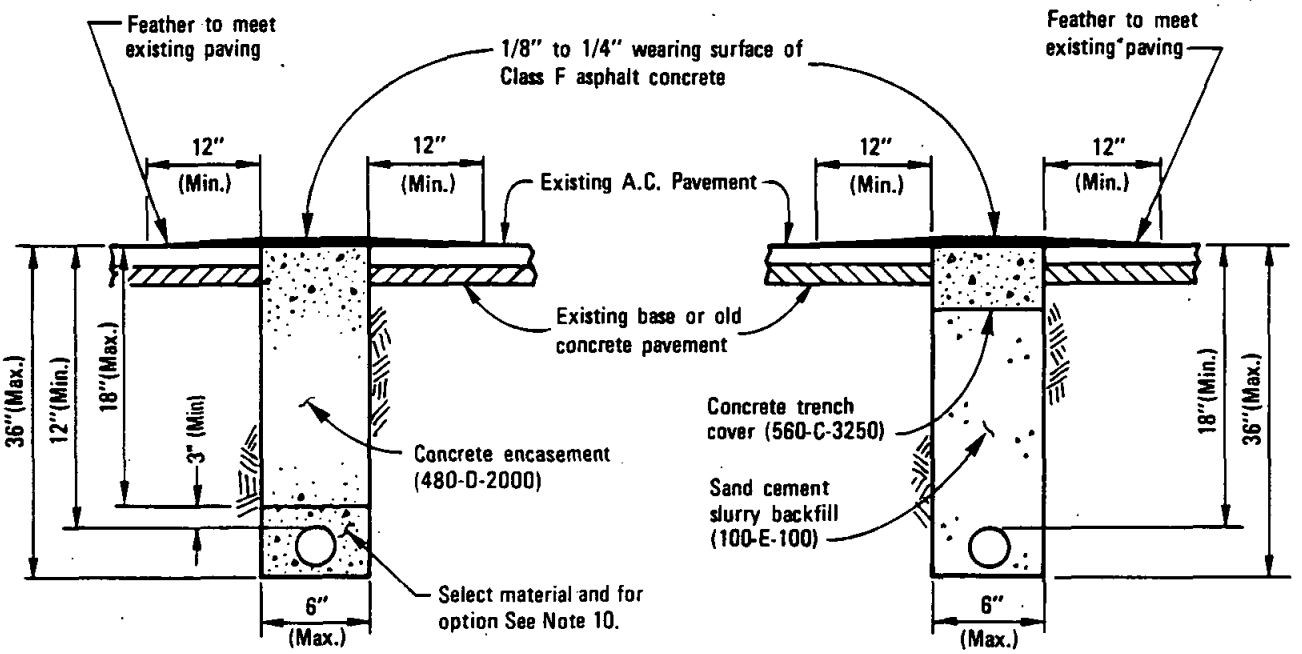

TYPE A TYPE B

NOTES

1. Concrete encasement or sand cement slurry backfill shall have a maximum slump of 4 inches.
2. Concrete encasement and sand cement slurry backfill shall be thoroughly consolidated to encase conduits. Tampers or vibrators shall be used.
3. Concrete shall be screeded off to match existing pavement grade and floated to assure proper edge match.
4. A tack coat shall be applied to the concrete and existing asphalt pavement prior to placing the new asphalt pavement wearing surface.
5. Existing A.C. pavement will not require sawcutting when using rockwheel for excavation.
6. Concrete trench cover shall be a minimum 5 1/2 inches thick in alleys or local residential streets and 7 inches thick in all other streets.
7. Allow concrete backfill or concrete trench cover seven calendar days minimum but no longer than thirty calendar days to cure and dry before applying the asphalt concrete wearing surface.
8. In major or prime arterial streets, an approved set accelerating admixture, such as Calcium Chloride, may be used only with prior approval of the agency's Engineer.
9. Only type A shall be permitted for supply cables of 750 volts or less. See California Public Utility Commission General Order No. 128, Rule 33.4 D. (1) (b).
10. Select material with a minimum sand equivalent of 50 shall be backfilled to 3" min. above the conduit. Sand cement slurry backfill (100-E-100) may be substituted for select material.

Revision	By	Approved	Date
Notes			9/88
Notes 8,10	TP		5-92

SAN DIEGO REGIONAL STANDARD DRAWING

NARROW TRENCHING TYPES A & B BACKFILL & RESURFACING

RECOMMENDED BY THE SAN DIEGO REGIONAL STANDARDS COMMITTEE

Coordinator R.C.E. C21133 Date 4-25-86

DRAWING NUMBER G-33

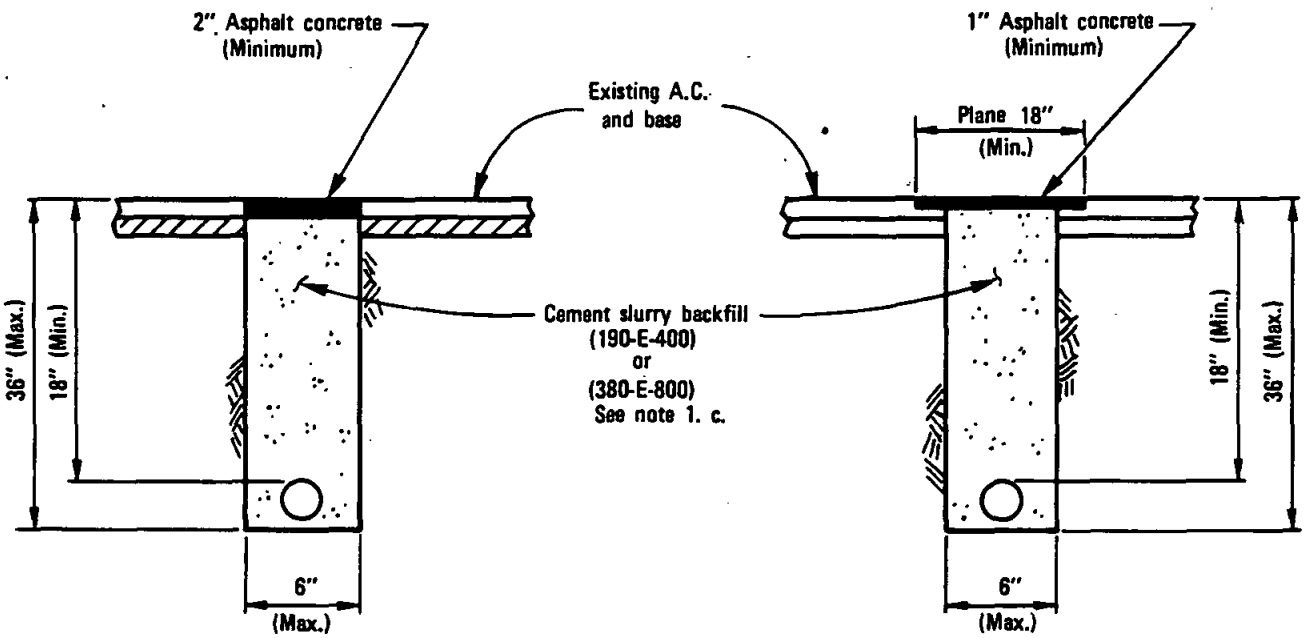

TYPE C

TYPE D

NOTES

1. Cement Slurry Backfill:
   a. Cement slurry backfill shall have a maximum slump of 4 inches.
   b. Cement slurry backfill shall be thoroughly consolidated to encase conduits. Tampers or vibrators shall be used.
   c. Cement slurry backfill shall be as follows:
      Alleys and local residential streets . . . . Class (190-E-400)
      All other streets . . . . . Class (380-E-800)
2. A tack coat shall be applied to the cement slurry backfill and existing asphalt pavement prior to placing the new asphalt surface.
3. Asphaltic Concrete Resurfacing:
   Type C
   a. Allow cement slurry backfill 24 hours minimum to cure before resurfacing.
   b. Thickness shall match the existing A.C. with a minimum of 2 inches.
   c. A.C. shall be hot mix.
   Type D
   a. Allow cement slurry backfill seven days minimum to cure before planing.
   b. Plane existing asphalt pavement and slurry backfill 1 inch minimum or one half thickness of existing A.C. not to exceed 2 inches.
   c. A.C. shall be hot mix.
4. A.C. resurfacing shall be sealed or chip sealed when required by the agencies Engineer.
5. Existing A.C. pavement will not require sawcutting when using rockwheel for excavation.

RECOMMENDED BY THE SAN DIEGO REGIONAL STANDARDS COMMITTEE M. Bahm 4-25-86 Coordinator R.C.E. C21133 Date	SAN DIEGO REGIONAL STANDARD DRAWING	Revision	By	Approved	Date
		NOTES	RC	G.H.	8-88
DRAWING NUMBER G-34	NARROW TRENCHING TYPES C & D BACKFILL & RESURFACING				

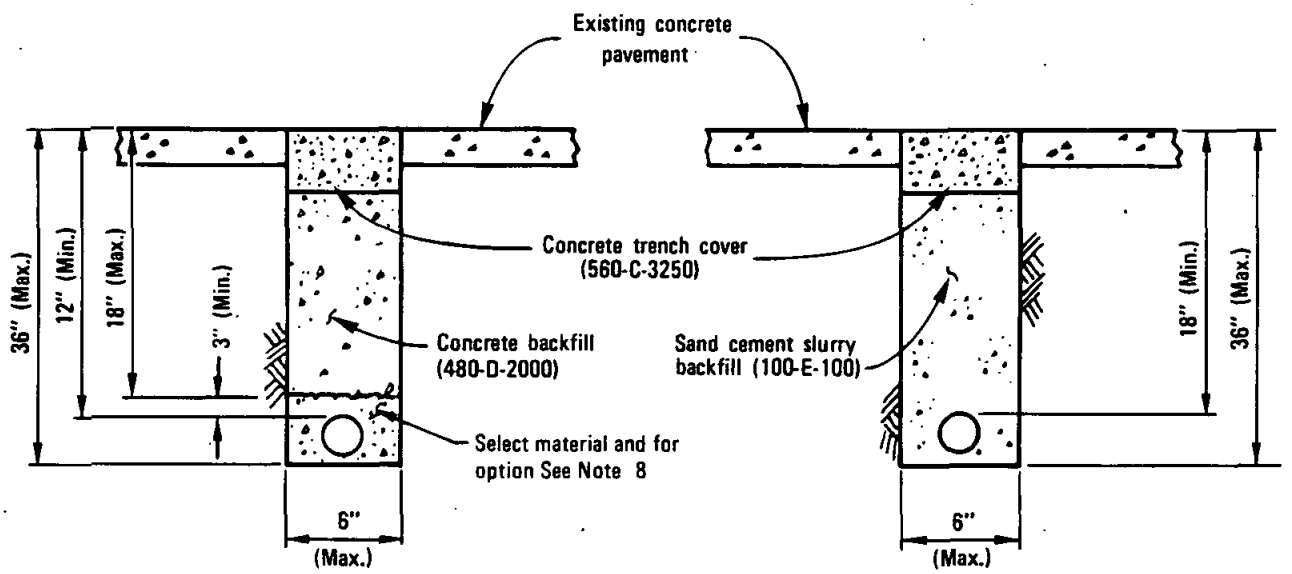

TYPE E

TYPE F

NOTES

1. Concrete backfill or sand cement slurry backfill shall have a maximum slump of 4 inches.
2. Concrete backfill and sand cement slurry backfill shall be thoroughly consolidated to encase conduits. Tampers or vibrators shall be used.
3. Concrete shall be screeded off to match existing pavement grade and floated to assure proper edge match.
4. Concrete trench cover shall be a minimum of 5½ inches thick in alleys or local residential streets and 7 inches thick in all other streets.
5. Existing concrete pavement will not require sawcutting when using rockwheel for excavation.
6. In major or prime arterial streets, an approved set accelerating admixture, such as Calcium Chloride, may be used only with prior approval of the agency's Engineer.
7. Only Type E shall be permitted for supply cables of 750 volts or less. See California Public Utility Commission General Order No. 128, Rule 33.4 D. (1) (b).
8. Select material with a minimum sand equivalent of 50 shall be backfilled to 3"min. above the conduit. Sand cement slurry backfill (100-E-100) may be substituted for select material.

Revision	By	Approved	Date
Notes 7, 8	[illegible]	[illegible]	9/88
Notes 6, 9	JP	[illegible]	5-92

SAN DIEGO REGIONAL STANDARD DRAWING

NARROW TRENCHING TYPES E & F BACKFILL & RESURFACING

RECOMMENDED BY THE SAN DIEGO REGIONAL STANDARDS COMMITTEE

[illegible] 4-25-86

Coordinator R.C.E. C21133 Date

DRAWING NUMBER G-35

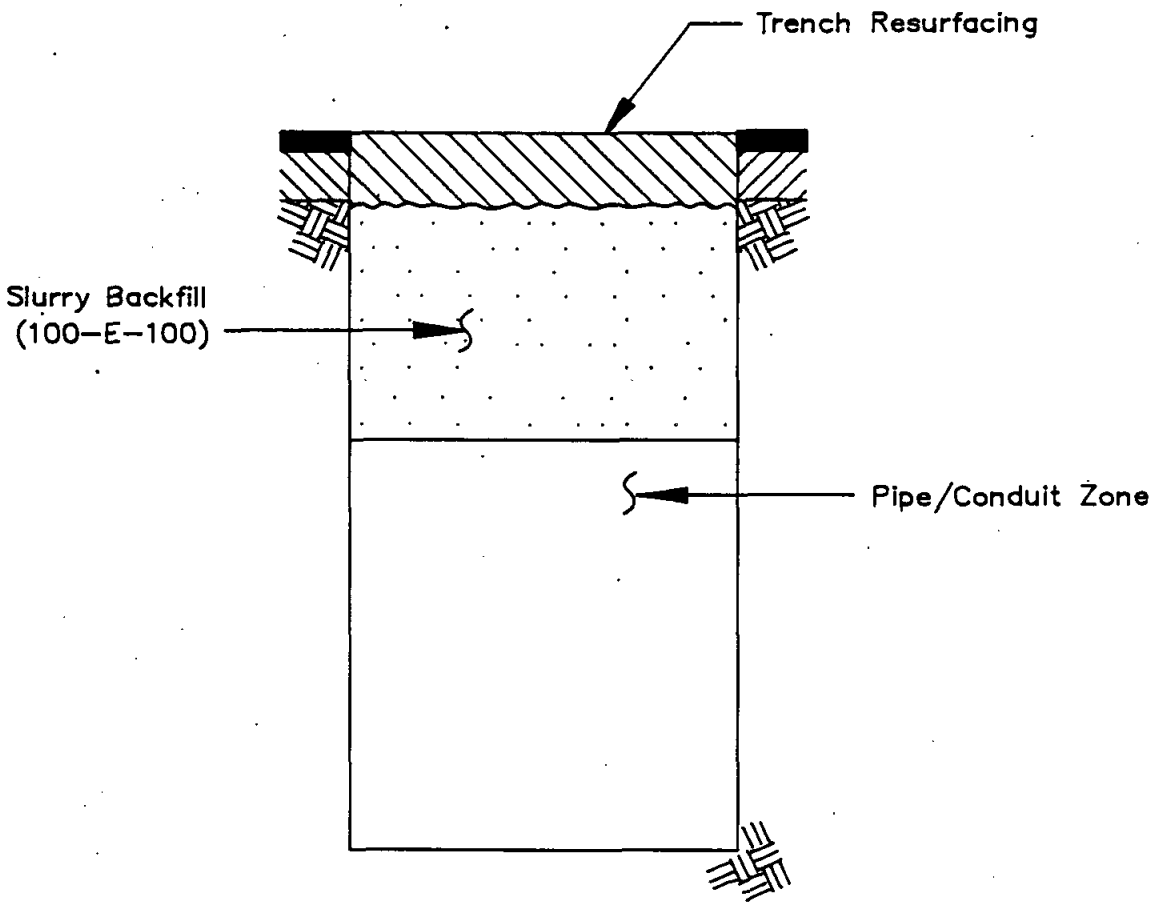

NOTES:

1. Trench resurfacing shall be done according to governmental (permitting) Agency's requirements.
2. The sand used for the slurry backfill shall meet the requirements for fine aggregate Subsection 400–1.3 listed in the Standard Specifications for Public Works Construction. Slurry must be firm prior to trench resurfacing.
3. Slurry backfill may be used in permeable soils and shall not be used where it will impede subsurface drainage.

RECOMMENDED BY THE SAN DIEGO REGIONAL STANDARDS COMMITTEE Chairman — Date: SEPT. 1988	SAN DIEGO REGIONAL STANDARD DRAWING	Revision	By	Approved	Date
	SLURRY BACKFILL				
DRAWING NUMBER G-36					

SPRINKLER IRRIGATION SYSTEMS

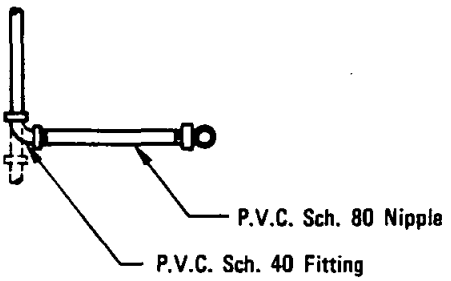

PLAN VIEW

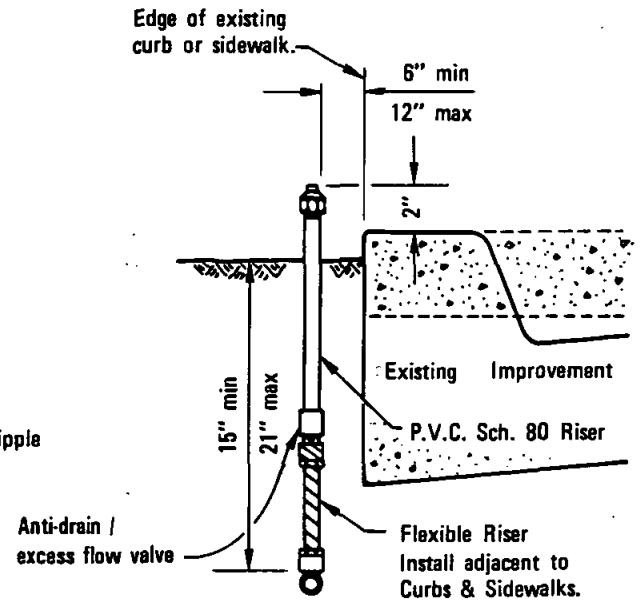

LOCATION OF SPRINKLER HEADS ADJACENT TO EXISTING IMPROVEMENTS

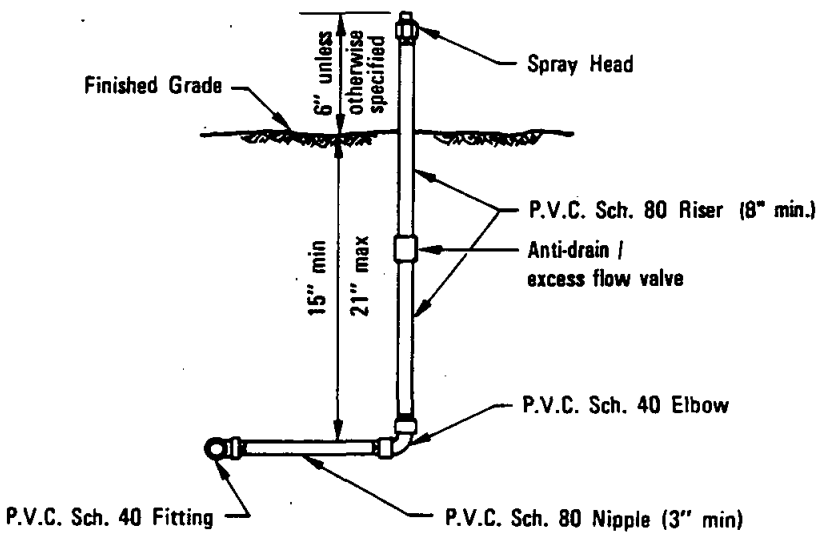

ELEVATION

NOTES

1. Teflon tape, 3/4" wide, shall be used on all threaded connections.
2. Close nipples shall not be used.

LEGEND ON PLANS

Show a number to indicate type head.

Revision	By	Approved	Date
Anti-Drain	JP	G.L.	5-92

SAN DIEGO REGIONAL STANDARD DRAWING

SHRUBBERY SPRINKLER HEAD FIXED SPRAY TYPE

RECOMMENDED BY THE SAN DIEGO REGIONAL STANDARDS COMMITTEE

Allan A. Kershaw — Dec. 1975
Coordinator R.C.E. 19807 — Date

DRAWING NUMBER I-1

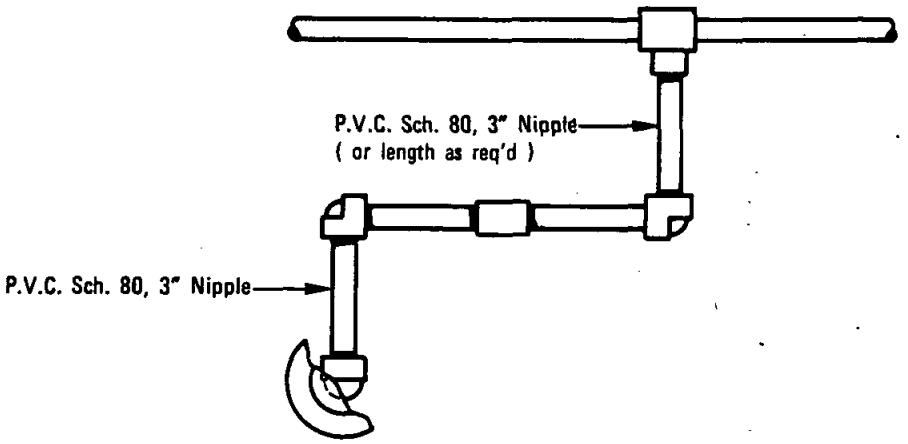

PLAN

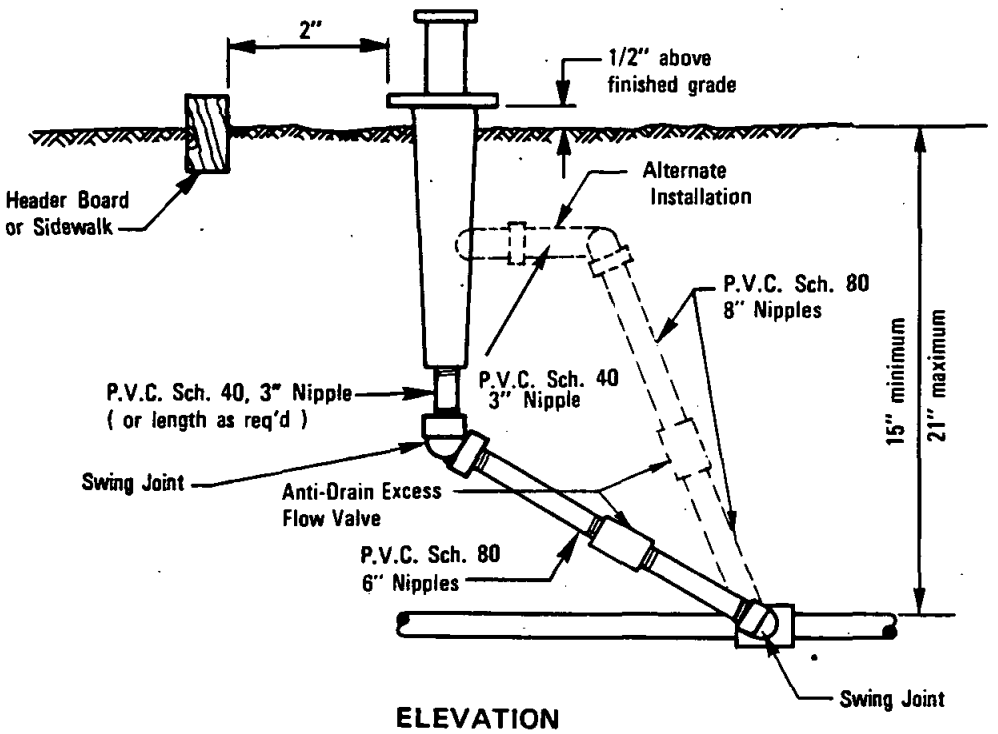

ELEVATION

NOTES

1. All fittings shall be P.V.C. Sch. 40.
2. Teflon tape, 3/4" wide, shall be used on all threaded connections.
3. Short nipples shall not be used.
4. Anti-drain/Excess Flow Valve shall be installed under all heads unless heads have a "Built-in" Anti-drain or check valve.

LEGEND ON PLANS

Show a number to indicate type head

RECOMMENDED BY THE SAN DIEGO REGIONAL STANDARDS COMMITTEE

Coordinator R.C.E. 19807 — Date: Dec. 1975

DRAWING NUMBER I-2

SAN DIEGO REGIONAL STANDARD DRAWING

SPRINKLER HEAD
POP UP SPRAY TYPE

Revision	By	Approved	Date
Alt. Instl.	TRP	M.B.	10-82
VALVE	[illegible]	G.H.	8-88
Swing joint	JP	[illegible]	5-92

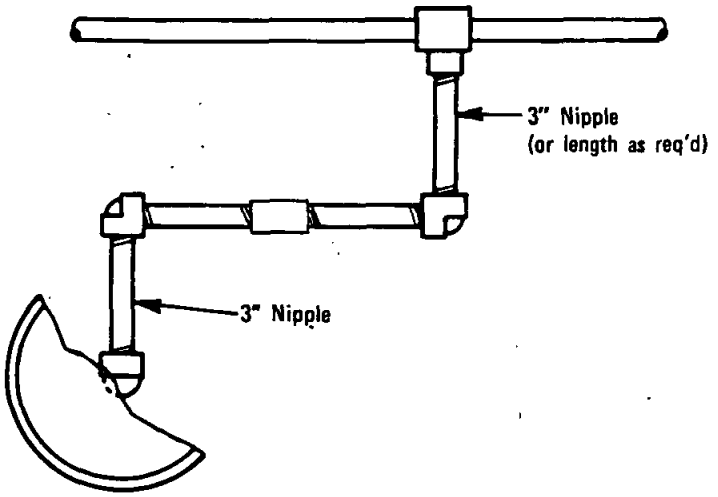

PLAN

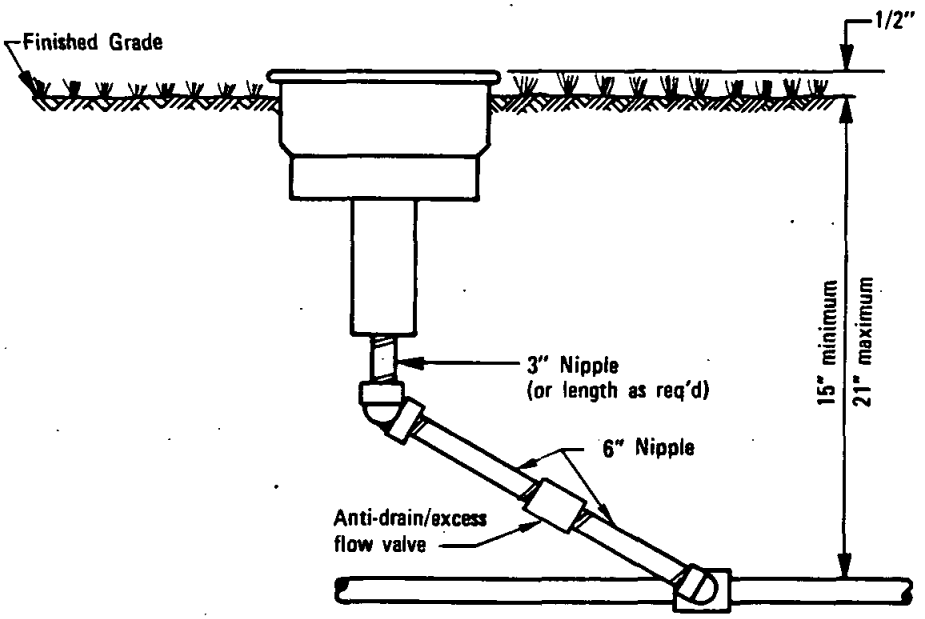

ELEVATION

NOTES

1. All fittings shall be P.V.C. Sch. 40.
2. All nipples shall be P.V.C. Sch. 80.
3. Teflon tape, 3/4" wide, shall be used on all threaded connections.
4. Short nipples shall not be used.
5. Anti-drain/Excess Flow Valve shall be installed under all heads unless heads have a "Built-in" Anti-drain or check valve.

LEGEND ON PLANS

Show a number to indicate type head

Revision	By	Approved	Date
Valve	RC	AH	9/88

SAN DIEGO REGIONAL STANDARD DRAWING

LAWN SPRINKLER HEAD POP UP ROTARY (WITH SWING JOINT)

RECOMMENDED BY THE SAN DIEGO REGIONAL STANDARDS COMMITTEE

Coordinator R.C.E. 19807 — Dec. 1975 Date

DRAWING NUMBER I-3

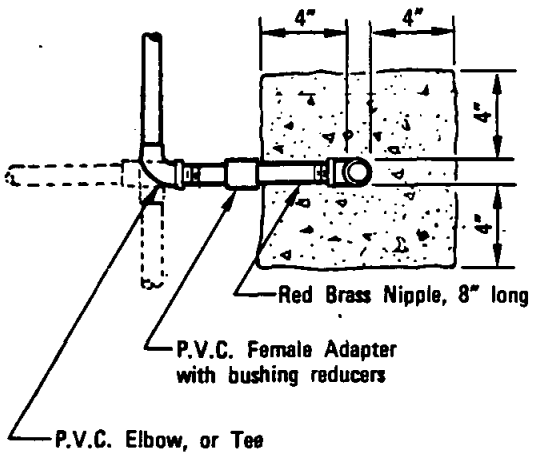

PLAN

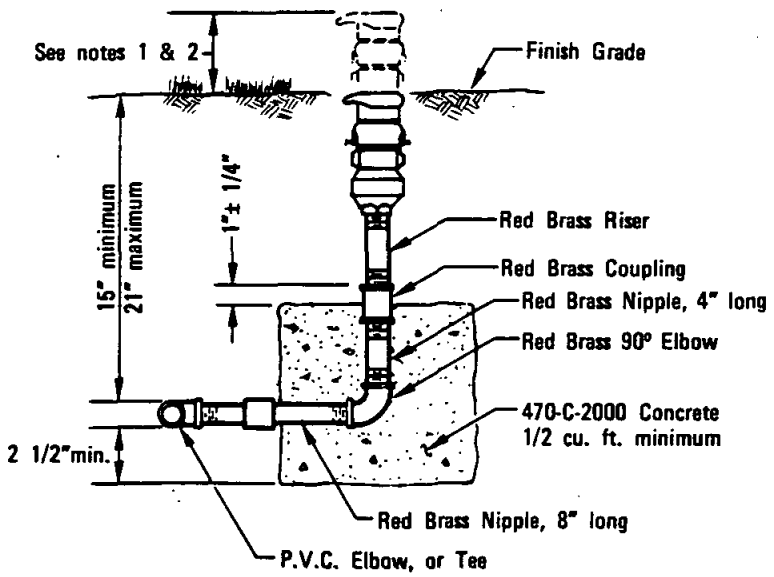

ELEVATION

COUPLER KEY-
SINGLE LUG

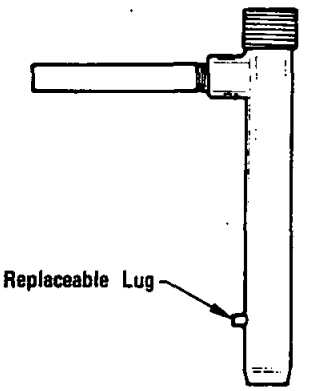

KEY FOR
LOCK TOP

NOTES
1. Quick coupling valves in lawn areas shall be set to grade.
2. Quick coupling valves in shrub areas shall be set 2 inches above grade.
3. Dimensions of concrete anchors are minimum.
4. Close nipples shall not be used.

LEGEND ON PLANS

Q.C.V. ◉

Revision	By	Approved	Date
Note 2	TRP	M.B.	10-82

SAN DIEGO REGIONAL STANDARD DRAWING

QUICK COUPLING VALVE

RECOMMENDED BY THE SAN DIEGO REGIONAL STANDARDS COMMITTEE

Allan A. Kershaw — Dec. 1975
Coordinator R.C.E. 19807 — Date

DRAWING NUMBER 1-5

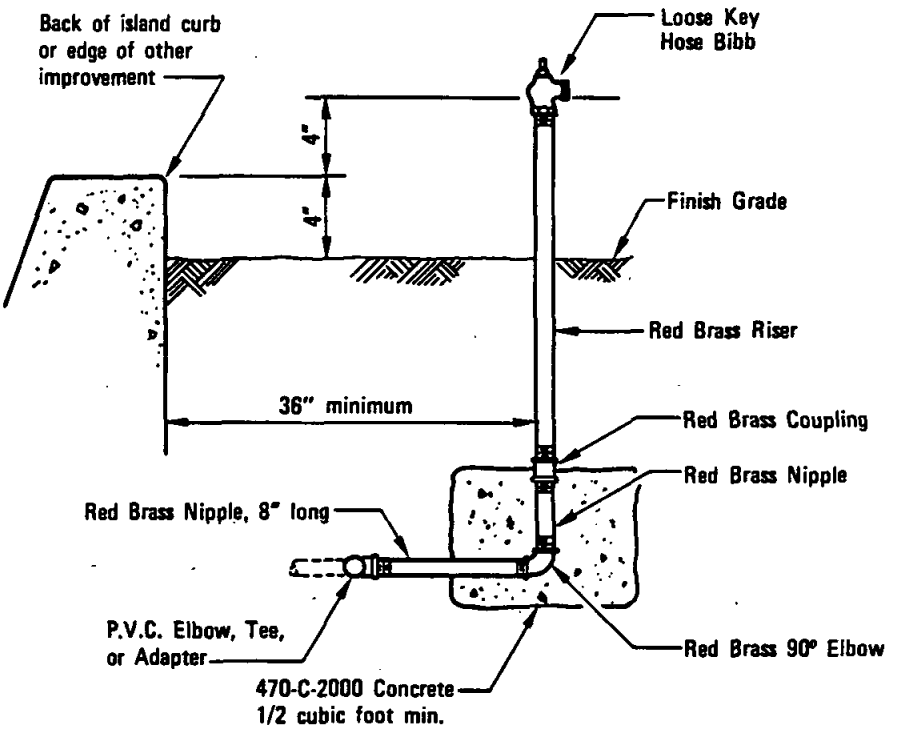

NOTES

1. Hose bibb shall be loose key operated, all brass or bronze construction, angle pattern with removable bonnet and stem assembly, replaceable seat washers and stem packing glands.
2. Unless otherwise specified, the hose connection thread shall be 3/4" male hose thread (pacific coast), and the riser opening thread shall be 3/4" female I.P.S. Discharge opening shall be 90° to riser opening.

LEGEND ON PLANS

RECOMMENDED BY THE SAN DIEGO REGIONAL STANDARDS COMMITTEE Allen A. Rawlins Dec. 1975 Coordinator R.C.E. 19807 Date	SAN DIEGO REGIONAL STANDARD DRAWING	Revision	By	Approved	Date
		Set Back	TR	M.B.	10-82
DRAWING NUMBER I-6	HOSE BIBB (GARDEN VALVE)				

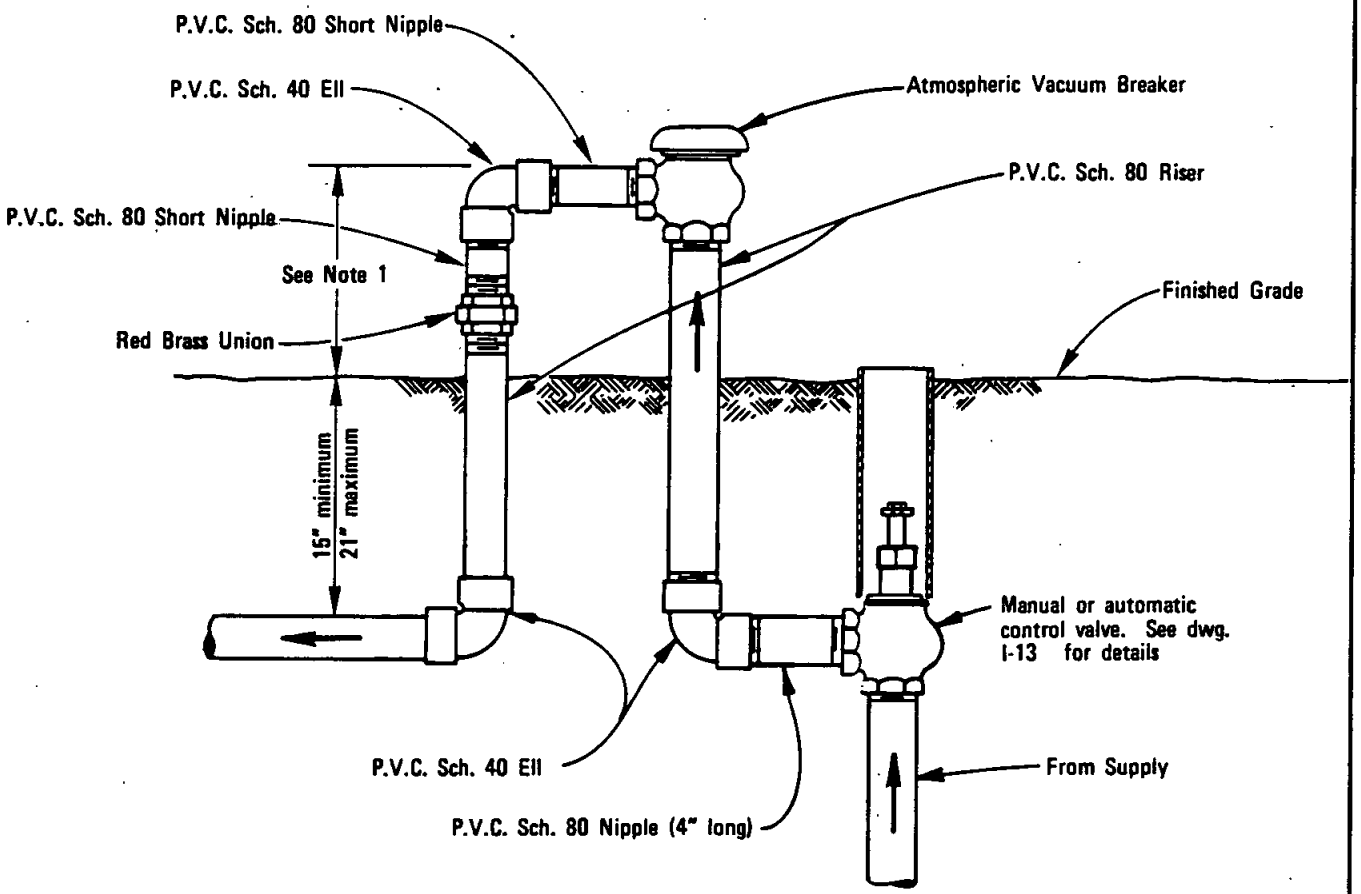

NOTES

1. Atmospheric vacuum breakers shall be installed approximately 6" above the finished grade and above a sufficient number of sprinkler heads closest to the vacuum breaker so that at no time will it be subjected to back pressure or drainage.
2. Close nipples shall not be used.
3. All fittings, including the atmospheric vacuum breaker, shall not be of smaller size than the valve.
4. Teflon tape, 3/4" wide, shall be used on all threaded connections.
5. For use on lines 2 inches and smaller.

LEGEND ON PLANS

Revision	By	Approved	Date
Union	TRP	M.B.	10-82

SAN DIEGO REGIONAL STANDARD DRAWING

BACKFLOW PREVENTER ATMOSPHERIC VACUUM BREAKER (2" & SMALLER)

RECOMMENDED BY THE SAN DIEGO REGIONAL STANDARDS COMMITTEE

Allan A. Kershaw — Coordinator R.C.E. 19807 — Dec. 1975 Date

DRAWING NUMBER I-7

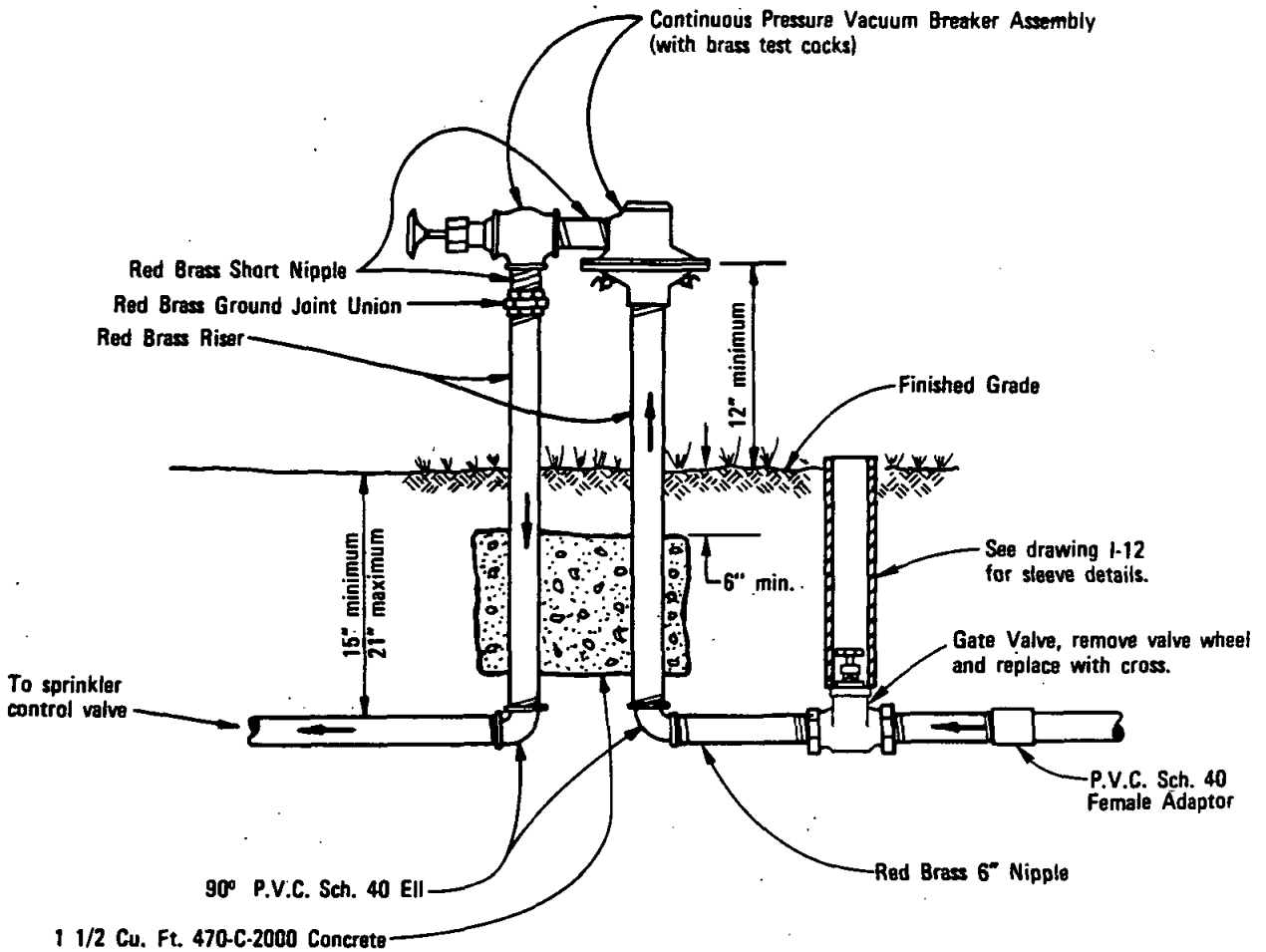

NOTES

1. Continuous pressure vacuum breakers shall be installed approximately 12 inches above finished grade and at the highest point in the line.
2. Continuous pressure vacuum breakers shall not be subjected to back pressure or drainage.
3. Teflon tape 3/4" wide shall be used on all threaded connections.
4. Close nipples shall not be used.

LEGEND ON PLANS

V ⊗

RECOMMENDED BY THE SAN DIEGO REGIONAL STANDARDS COMMITTEE Allan O. Kashani Dec. 1975 Coordinator R.C.E. 19807 Date	SAN DIEGO REGIONAL STANDARD DRAWING	Revision	By	Approved	Date
		Note 1	[illegible]	D.S.	7-79
	BACKFLOW PREVENTER · CONTINUOUS PRESS. VAC. BREAKER ASSY. (2" & SMALLER)	Reference	RP	M.B.	10-82
DRAWING NUMBER I-8					

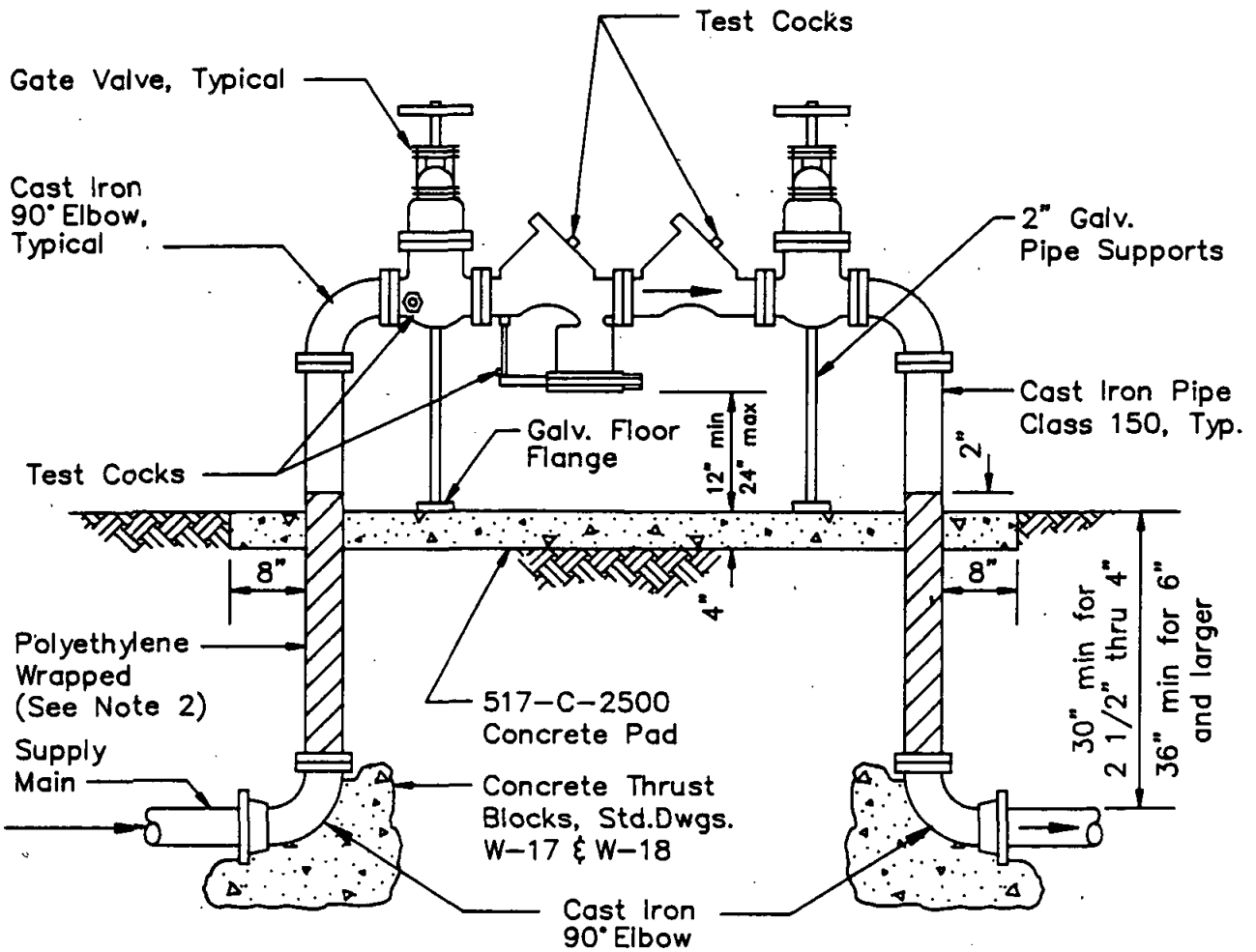

NOTES:

1. All fittings on assembly shall be flanged.
2. Buried cast iron pipe and fittings shall be polyethylene wrapped with 2 inch wide plastic backed adhesive tape (8 mil thickness). Use 1/2 inch overlap.
3. Cast iron pipe and fittings shall be cement mortar lined.
4. All exposed cast iron shall be painted with one coat of primer and two coats of exterior enamel.
5. Concrete pad shall be 24 inches wide.
6. Backflow preventer assembly shall be tested upon installation by a certified backflow device tester. Contractor shall provide Engineer with written test results completed by certified backflow tester prior to the backflow preventer assembly's acceptance by Engineer.
7. Adapt inlet and outlet fittings to main as required.

LEGEND ON PLANS

Revision	By	Approved	Date
New Dwg.	SC	A.H.	10/88

SAN DIEGO REGIONAL STANDARD DRAWING

BACKFLOW PREVENTER
REDUCED PRESSURE PRINCIPLE
ASSEMBLY-LARGER THAN 2"

RECOMMENDED BY THE SAN DIEGO REGIONAL STANDARDS COMMITTEE

Chairman — Date: SEPT. 1988

DRAWING NUMBER I-9

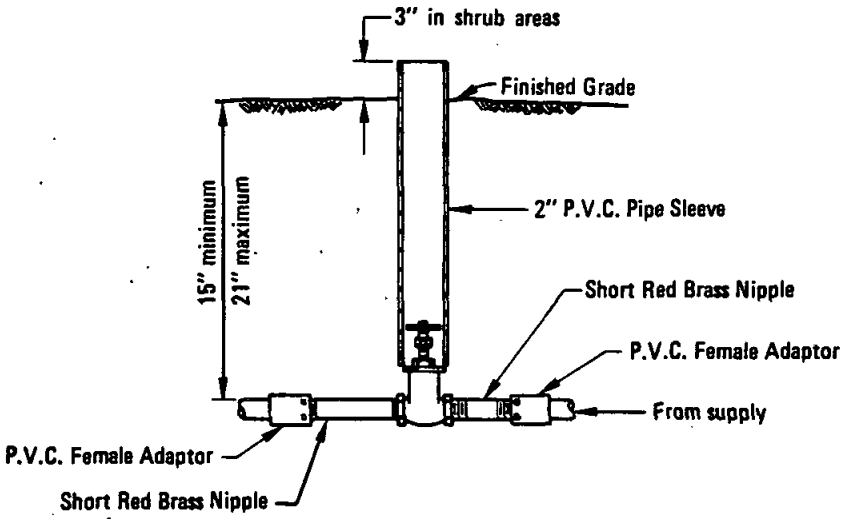

STANDARD INSTALLATION

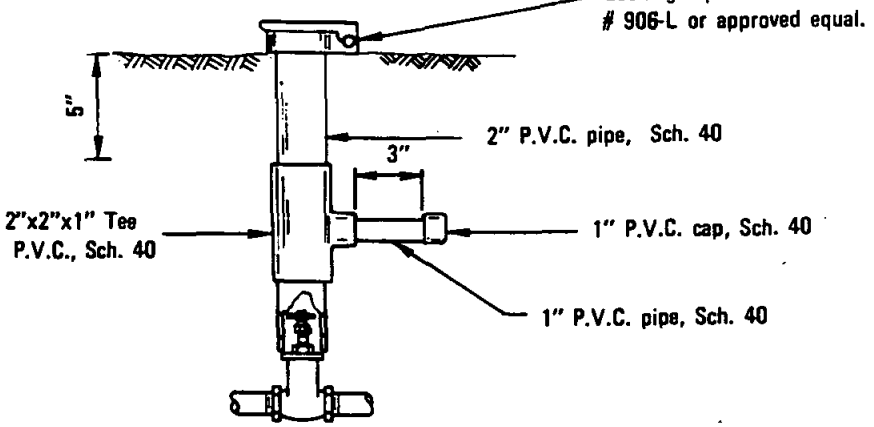

ALTERNATE PIPE
SLEEVE INSTALLATION

NOTES

1. All valves shall be furnished with a standard manual control valve bronze cross handle.
2. All valves shall be installed within 12" of the water main, unless otherwise shown on the plans.
3. Close nipples shall not be used.

LEGEND ON PLANS

⊗ G. V.

RECOMMENDED BY THE SAN DIEGO REGIONAL STANDARDS COMMITTEE Coordinator R.C.E. 19807 — Dec. 1975 Date	SAN DIEGO REGIONAL STANDARD DRAWING	Revision	By	Approved	Date
		Union	MP	M.B.	10-82
DRAWING NUMBER I-12	GATE VALVE (2" AND SMALLER)				

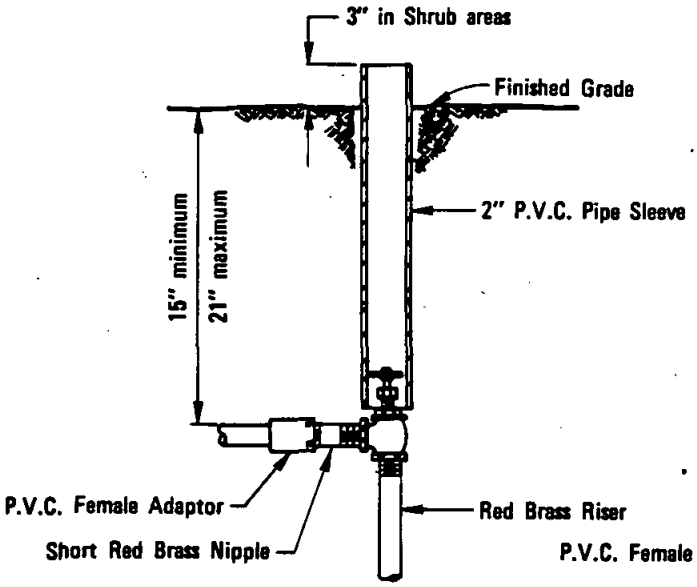

ANGLE VALVE

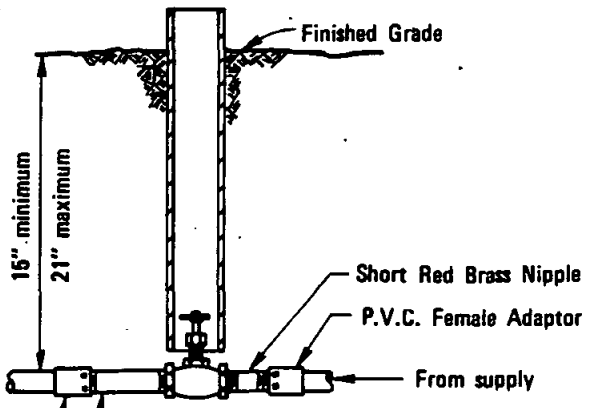

GLOBE VALVE
(special cases only)

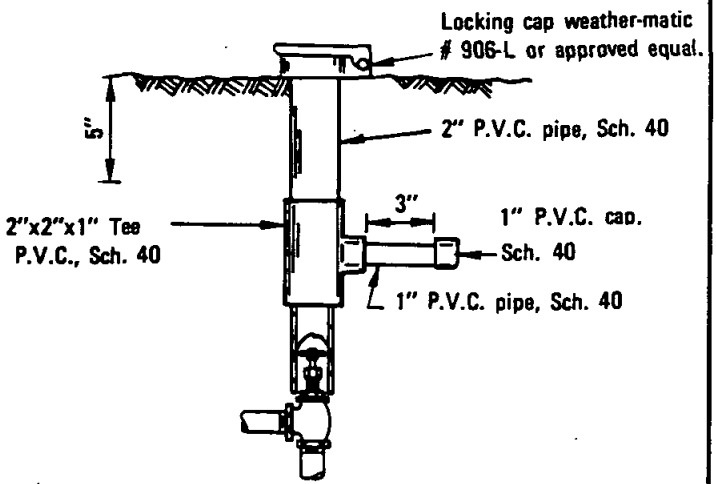

ALTERNATE PIPE
SLEEVE INSTALLATION

NOTES

1. All Manual Valves shall be furnished with a standard manual control valve bronze cross handle.
2. All valves shall be installed with 12" of the water main, unless otherwise shown on the plans.
3. All Manual Valves shall be furnished with a removable bonnet and packing gland nut.
4. Close Nipples shall not be used.
5. Locking cap shall be mounted flush with finish grade in turf areas & 1 inch above finish grade in shrub areas.

LEGEND ON PLANS

M.C.V.

Revision	By	Approved	Date
Union	TRP	M.B.	10-82
Note 5	[illegible]	M.B.	5-86

SAN DIEGO REGIONAL STANDARD DRAWING

MANUAL VALVES

RECOMMENDED BY THE SAN DIEGO REGIONAL STANDARDS COMMITTEE

Allan A. Kaufman — Dec. 1975
Coordinator R.C.E. 19807 — Date

DRAWING NUMBER 1-13

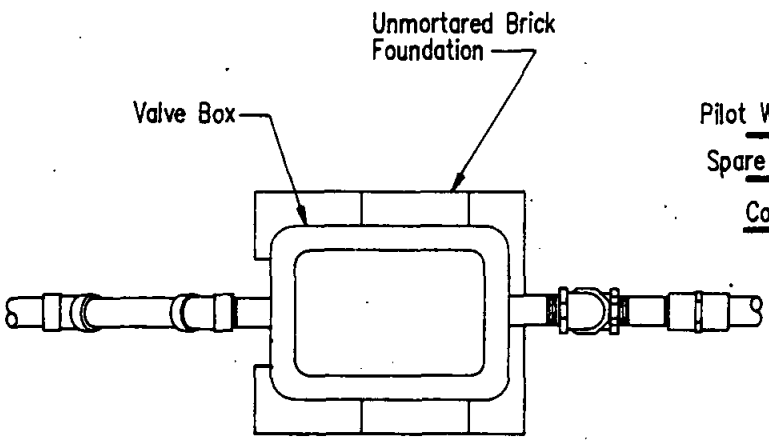

PLAN

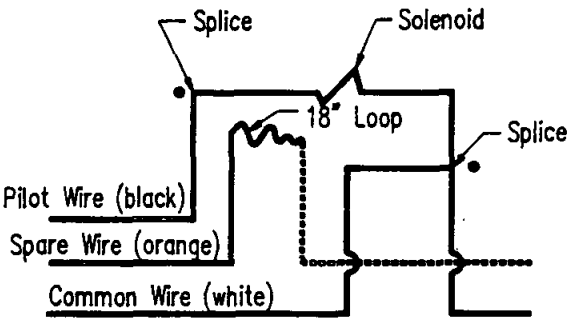

TYPICAL ELEMENTARY DIAGRAM FOR WIRING ELECTRICAL REMOTE CONTROL VALVE

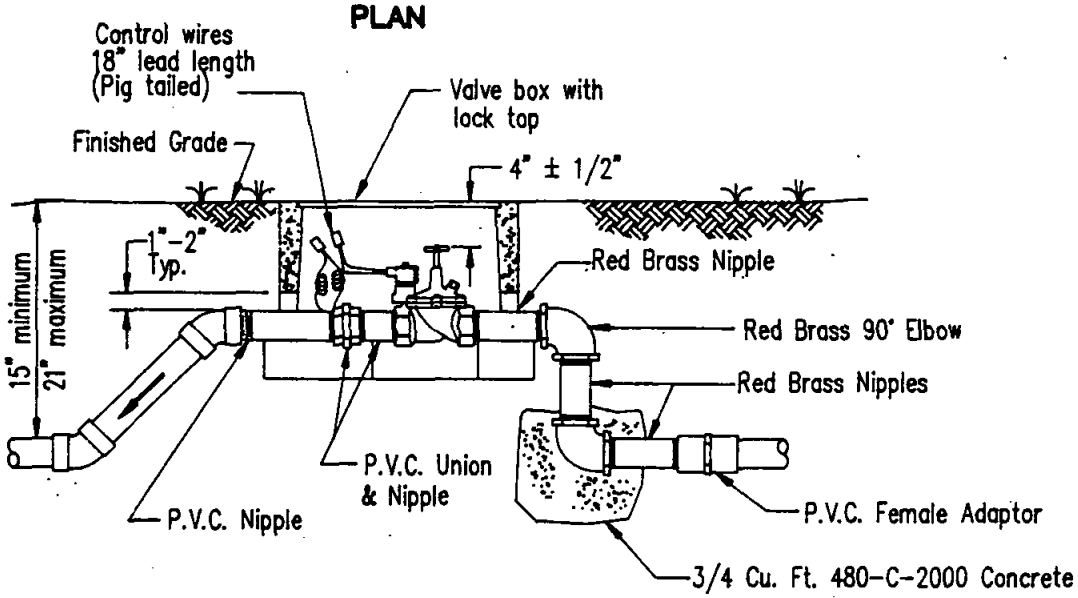

ELEVATION

NOTES:

1. Splicing shall be made in valve boxes and pull boxes only. See Standard Drawing I-15 for splice details.
2. Close nipples shall not be used.
3. Spare wires terminating in valve boxes shall have their ends insulated, the same as for a splice.
4. When two or more valves are installed in the same location, they shall be in manifold using red brass fittings, with a globe valve installed at the start of the manifold.
5. All valves shall be installed with a union on the downstream side of the valve. The union shall be P.V.C.
6. Valve/controller identification shall be painted on the valve boxes. Use only aluminum asphaltic base water proof paint.
7. Clearance between piping and valve box shall be 1" to 2" typical.

LEGEND ON PLANS

▼R.C.V

RECOMMENDED BY THE SAN DIEGO REGIONAL STANDARDS COMMITTEE	SAN DIEGO REGIONAL STANDARD DRAWING	Revision	By	Approved	Date
Chairman ACE 25902 Date 5-11-92					
DRAWING NUMBER I-14	REMOTE CONTROL VALVE				

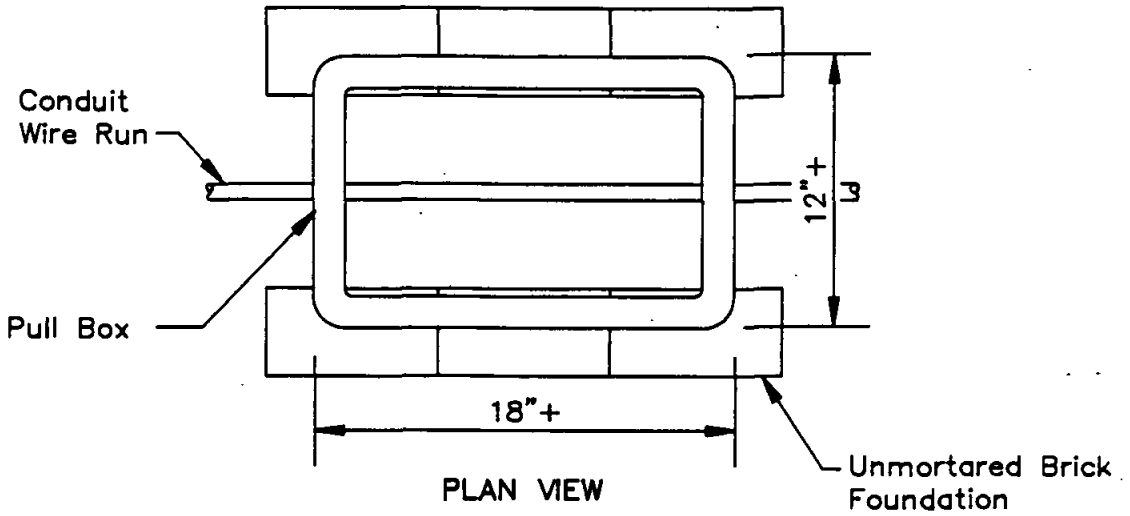

PLAN VIEW

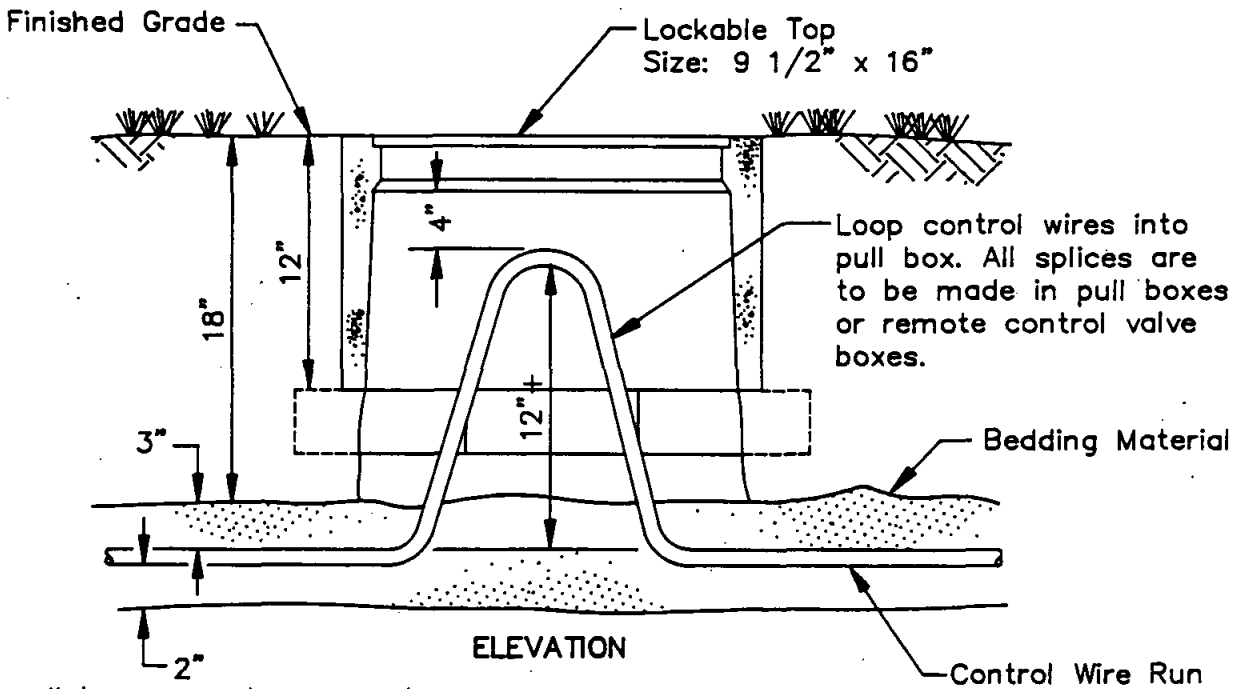

ELEVATION

NOTES

1. Install pull boxes as shown on plans.
2. At junctions where runs combine, splice common ground in pull box.
3. Pull box cover shall be permanently marked "ELECTRIC".
4. Conductors for each controller clock shall be harnessed separately and at sufficient intervals to maintain a definite bundle.
5. All splices shall be made with a properly set mechanical splice connector entirely enclosed in self-curing resin and shall be completely water-proof.
6. All spare wire ends shall be insulated in the same manner as wire splices.
7. If specified, all splices shall be soldered with metallic alloy solder prior to installing connectors.
8. Wire bundles inside pull boxes shall be at least 4 inches from the under side of the box cover. Minimum size pull box shall be as shown above. Larger boxes may be necessary to meet 4 inch clearance requirement.

LEGEND

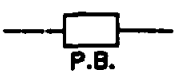

Revision	By	Approved	Date
Notes	RC	A.H.	10/88

SAN DIEGO REGIONAL STANDARD DRAWING

ELECTRICAL PULL BOX FOR DIRECT BURIAL CONTROL WIRES AND SPLICE DETAILS

RECOMMENDED BY THE SAN DIEGO REGIONAL STANDARDS COMMITTEE

Allan A. Kershaw — Dec. 1975
Coordinator R.C.E. 19607 — Date

DRAWING NUMBER I-15

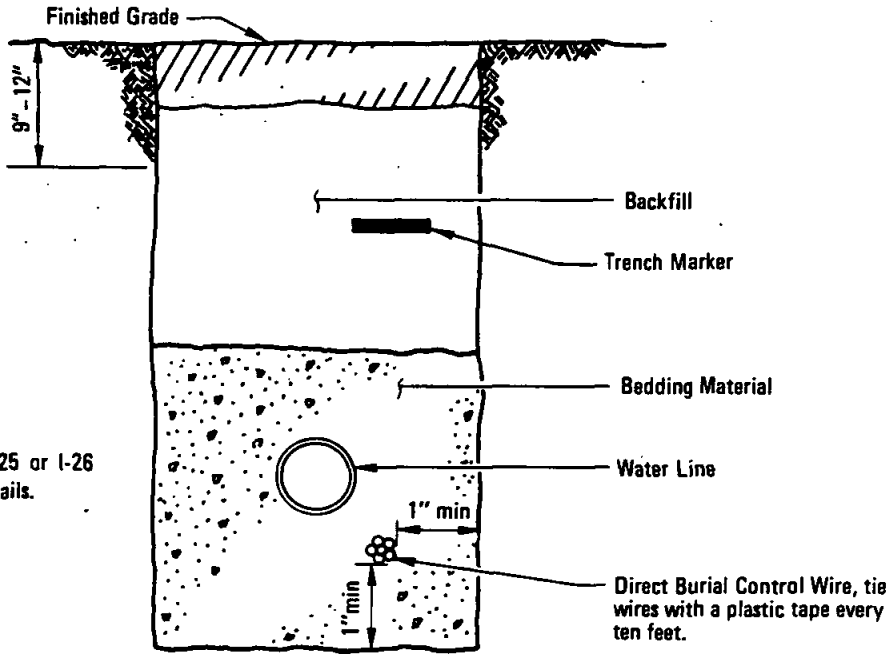

NOTE
See Standard Drawing I-25 or I-26 for water line trench details.

NORMAL LOCATIONS OF CONTROL WIRES

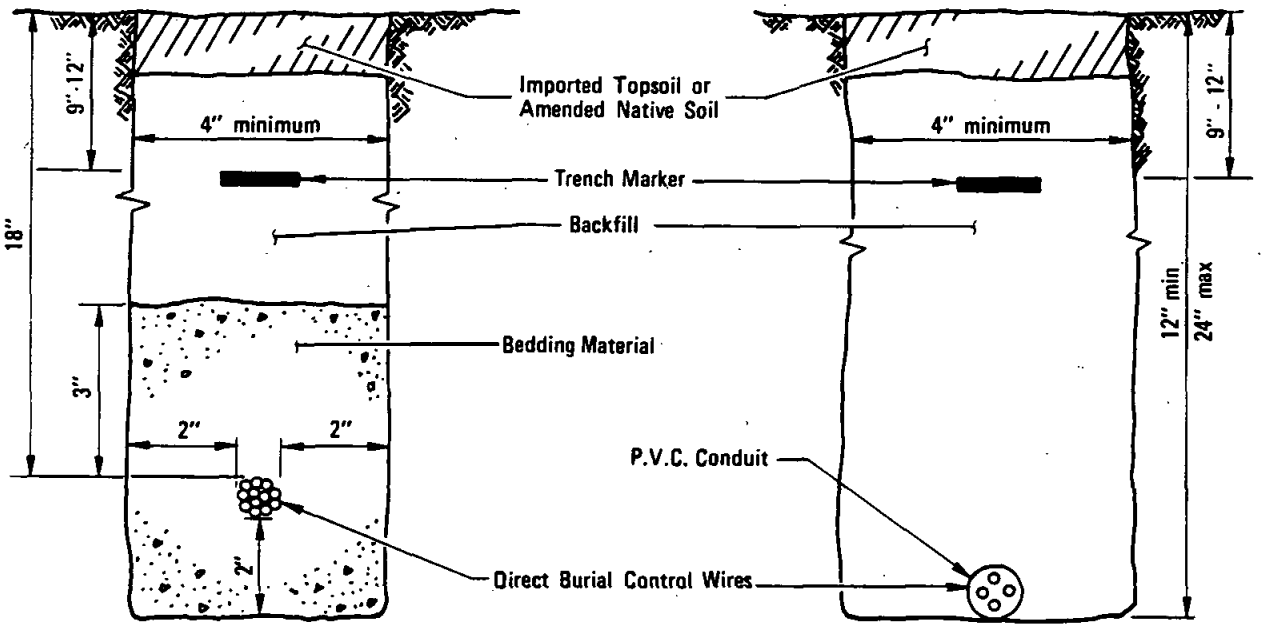

ALTERNATE LOCATION OF CONTROL WIRES

NOTES:

1. Bedding material shall have a sand equivalent of 50, minimum
2. Place a 3" wide red continuous plastic tape trench marker, 9" to 12" below finish grade, directly above the direct burial control wires.

RECOMMENDED BY THE SAN DIEGO REGIONAL STANDARDS COMMITTEE Coordinator R.C.E. 19807 Date Dec. 1975	SAN DIEGO REGIONAL STANDARD DRAWING	Revision	By	Approved	Date
		Reference	TRP	M.B.	10-82
		MARKER	RC	J.H.	3-88
DRAWING NUMBER I-16	DIRECT BURIAL CONTROL WIRE				

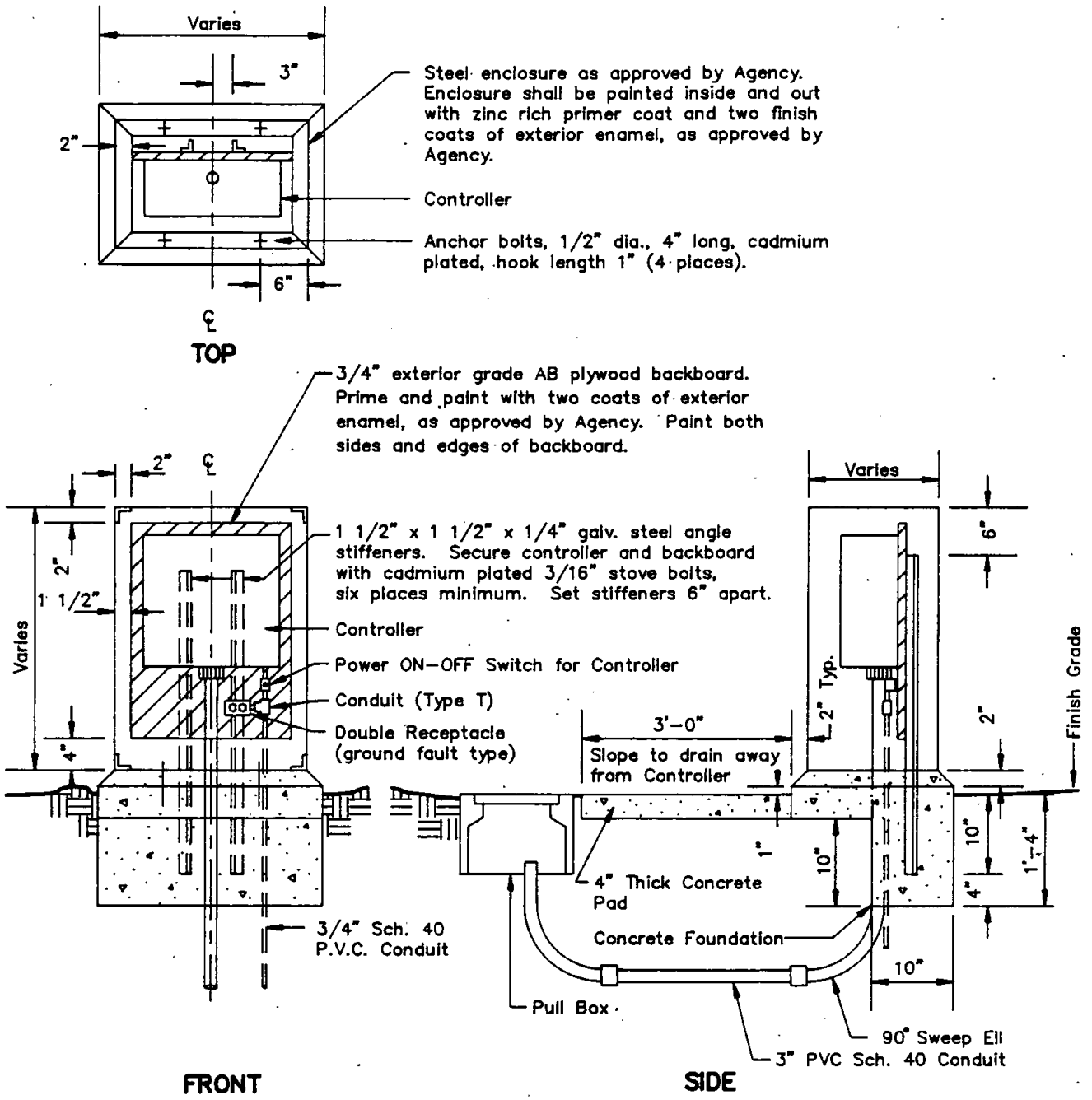

NOTES:

1. Install in each enclosure, one 25 watt incandescent lamp in a two-prong plug in light socket. Install in receptacle.
2. A 15 amp (minimum) circuit is required at each double receptable (120 V).
3. Each controller shall have a power ON-OFF switch, with lock-out. tag-out facility.

LEGEND ON PLANS

Revision	By	Approved	Date

SAN DIEGO REGIONAL STANDARD DRAWING

IRRIGATION SYSTEMS
ELECTRIC CONTROLLER CLOCK
PEDESTAL MOUNTING

RECOMMENDED BY THE SAN DIEGO REGIONAL STANDARDS COMMITTEE

Chairman RCE 25902 Date 5-11-92

DRAWING NUMBER I-17

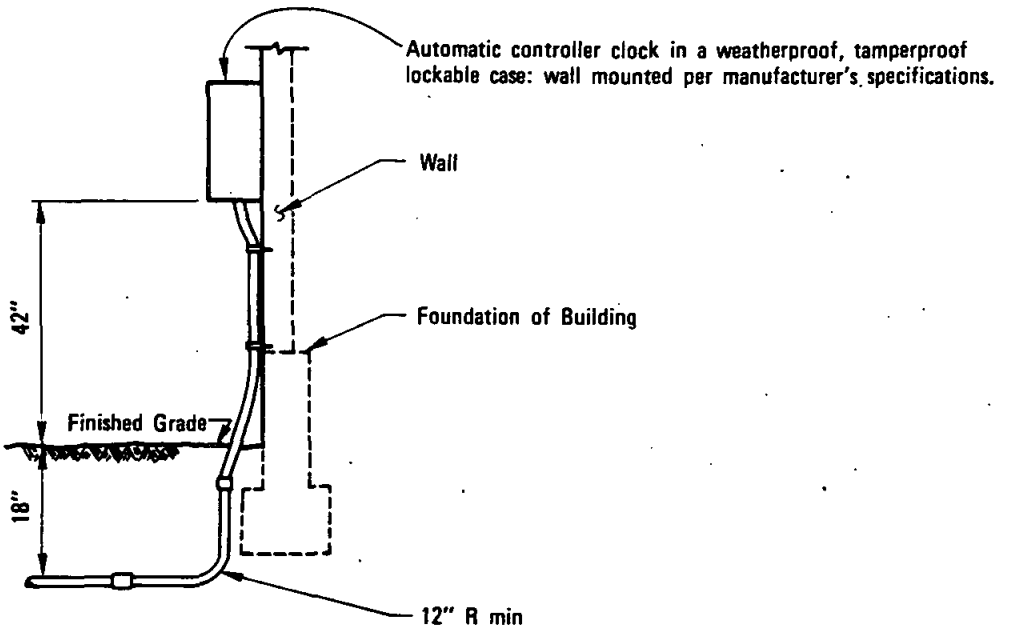

SIDE VIEW

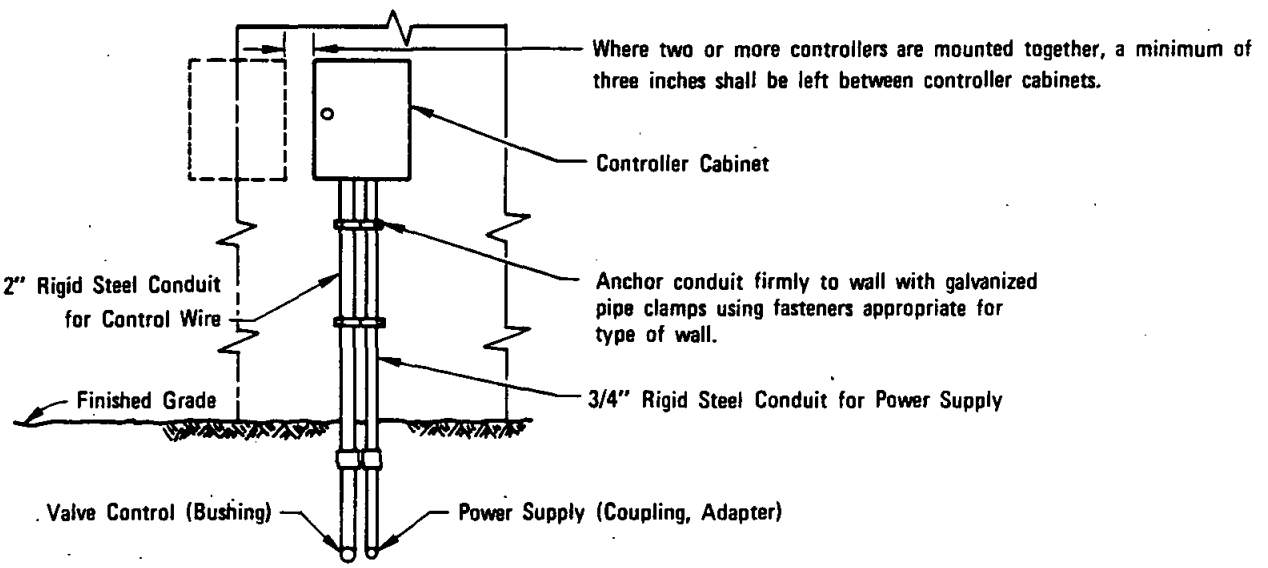

ELEVATION

NOTES

1. For location of supply conduit and conductor, refer to the plans.
2. Controller shall be grounded at power supply by ground wire.
3. Make all electrical connections inside controller cabinet.
4. Each controller shall have a power on/off switch, with lock-out, tag-out facility.

LEGEND ON PLANS

RECOMMENDED BY THE SAN DIEGO REGIONAL STANDARDS COMMITTEE

Allan A. Kershaw — Dec. 1975
Coordinator R.C.E. 19807 — Date

DRAWING NUMBER I-18

SAN DIEGO REGIONAL STANDARD DRAWING

IRRIGATION SYSTEMS ELECTRIC CONTROLLER CLOCK WALL MOUNTING

Revision	By	Approved	Date
Note 4	JP	S.K.	5-92

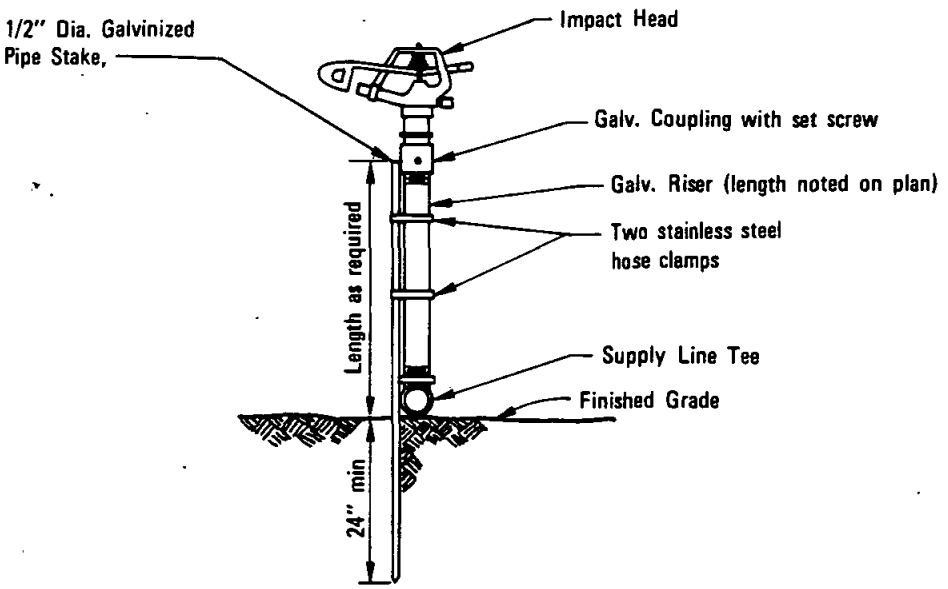

LEVEL INSTALLATION

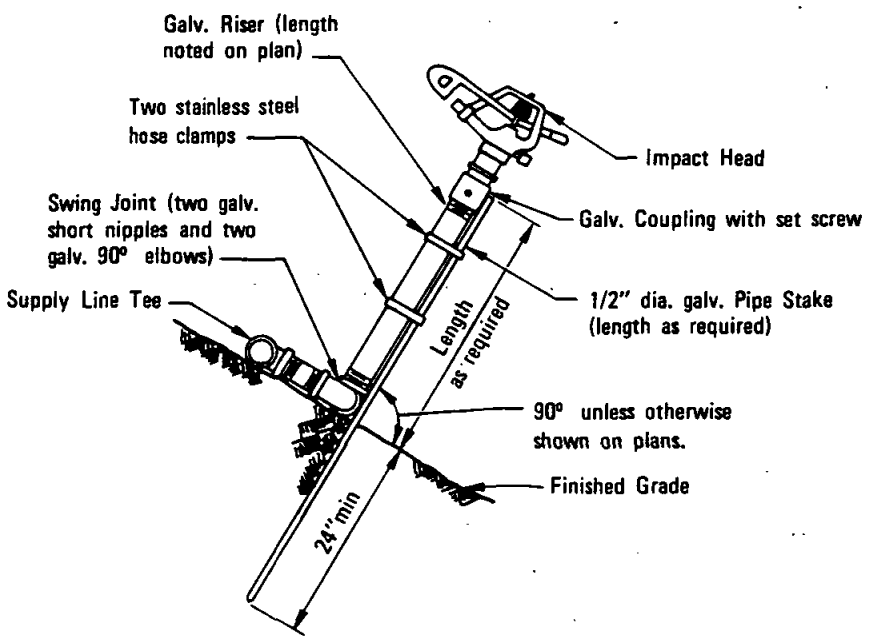

SLOPE INSTALLATION

LEGEND ON PLANS

Show a number to indicate type head

Revision	By	Approved	Date
Stake	TRP	M.B.	10-82
Clamps	JP	S. A.	5-92

SAN DIEGO REGIONAL STANDARD DRAWING

IMPACT HEAD ABOVE GROUND PIPE INSTALLATIONS

RECOMMENDED BY THE SAN DIEGO REGIONAL STANDARDS COMMITTEE

Allan A. Kershaw — Dec. 1975

Coordinator R.C.E. 19807 — Date

DRAWING NUMBER I-19

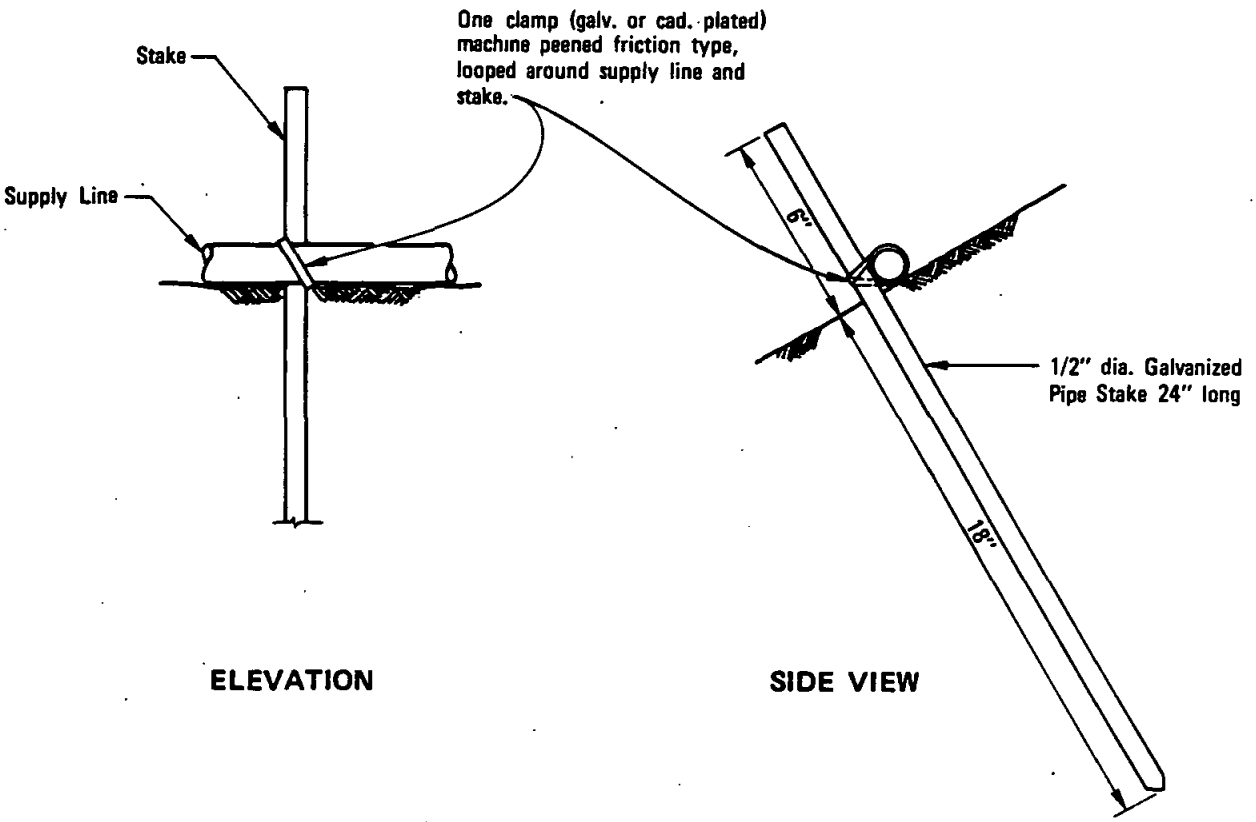

NOTE

Stake shall be placed no greater than 15' apart and at each riser.

RECOMMENDED BY THE SAN DIEGO REGIONAL STANDARDS COMMITTEE	SAN DIEGO REGIONAL STANDARD DRAWING	Revision	By	Approved	Date
Coordinator R.C.E. 19887 Dec. 1975 Date	PINNING OF PIPE ABOVE GROUND PIPE INSTALLATIONS				
DRAWING NUMBER I-20					

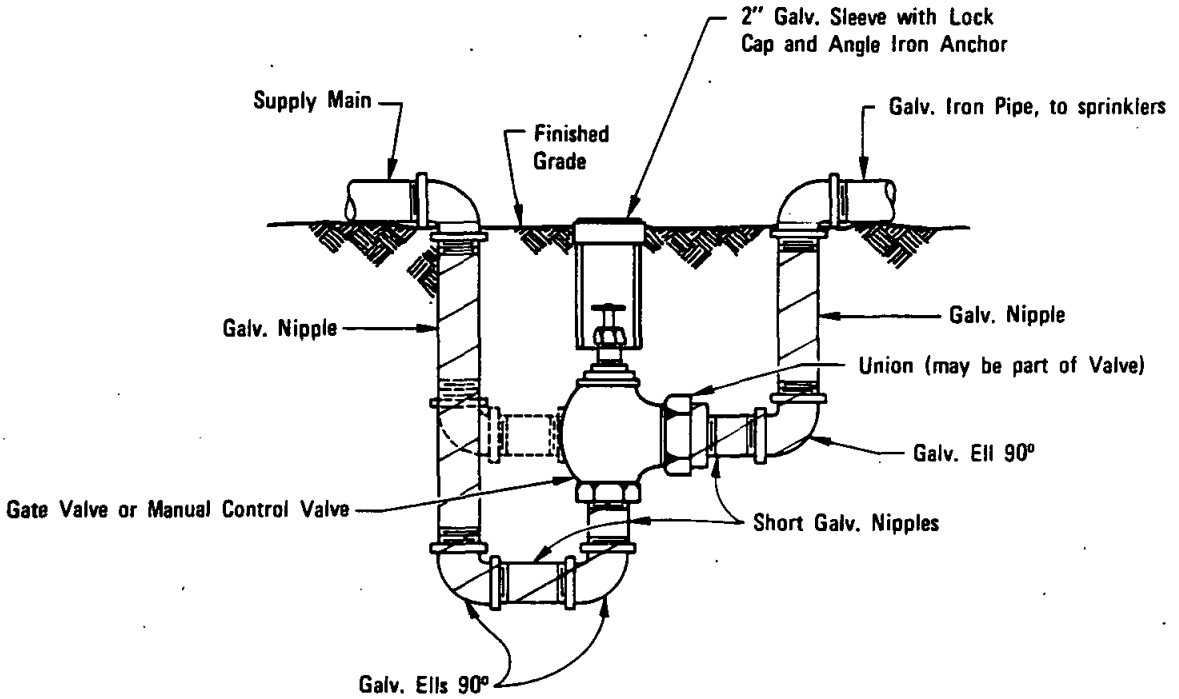

NOTE

All Galvanized Pipe, Nipples and Fittings installed underground shall be wrapped with 2" wide plastic backed adhesive tape, use ½" overlap.

LEGEND ON PLANS

M.C.V.

G.V.

Revision	By	Approved	Date
Note	JC	O.S.	7-79

SAN DIEGO REGIONAL STANDARD DRAWING

MANUAL CONTROL VALVE AND GATE VALVE INSTALLATION FOR ABOVE GROUND PIPE INSTALLATIONS

RECOMMENDED BY THE SAN DIEGO REGIONAL STANDARDS COMMITTEE

Allan A. Kershaw — Coordinator R.C.E. 19807 — Dec. 1975 Date

DRAWING NUMBER I-21

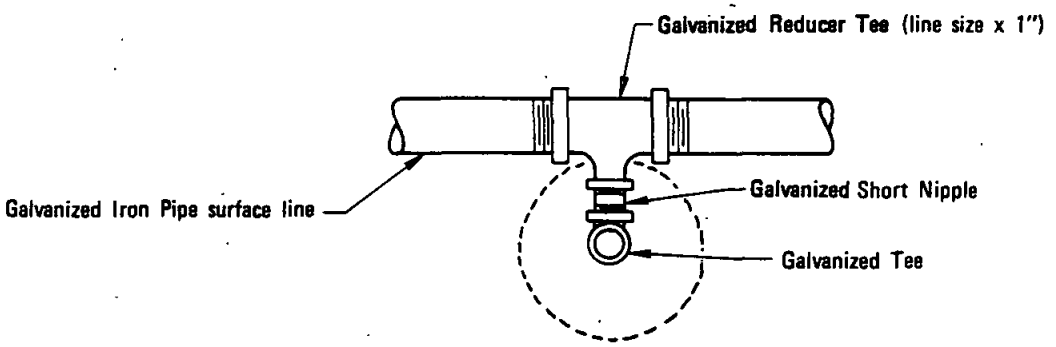

PLAN

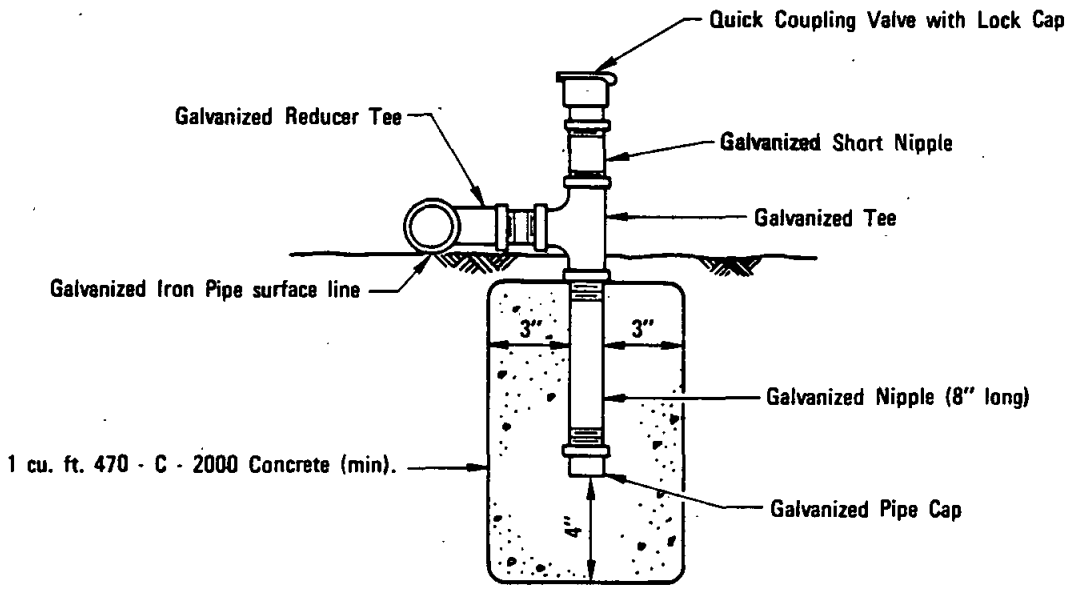

ELEVATION

LEGEND ON PLANS

RECOMMENDED BY THE SAN DIEGO REGIONAL STANDARDS COMMITTEE Allan A. Kershaw — Dec. 1975 Coordinator R.C.E. 19807 — Date	SAN DIEGO REGIONAL STANDARD DRAWING	Revision	By	Approved	Date
DRAWING NUMBER 1-22	QUICK COUPLER ASSEMBLY ABOVE GROUND PIPE INSTALLATIONS				

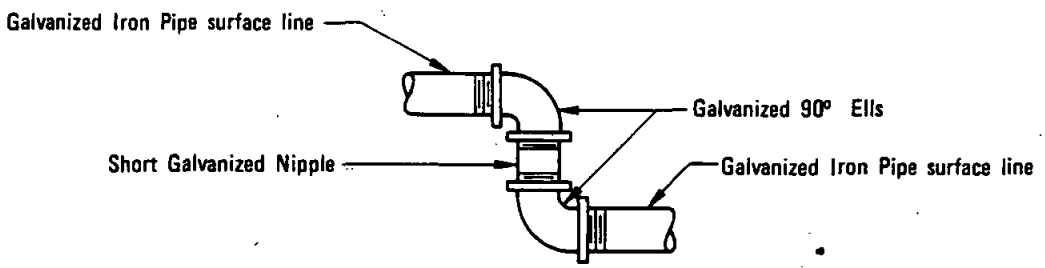

SWING JOINT DETAIL

PLAN

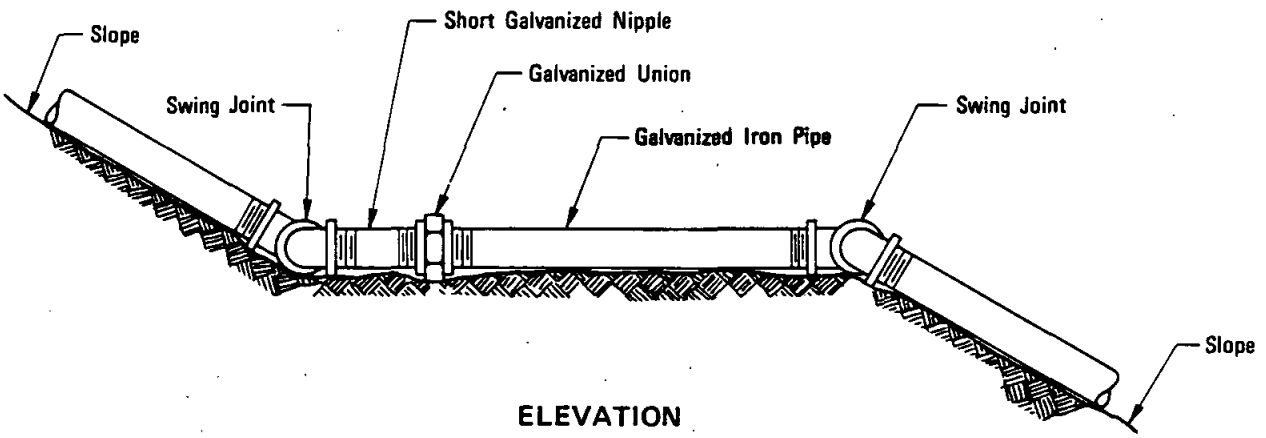

ELEVATION

NOTE

Swing Joints shall be used at each change of grade.

LEGEND ON PLANS

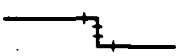

Revision	By	Approved	Date

SAN DIEGO REGIONAL STANDARD DRAWING

SWING JOINT AND PIPE INSTALLATION ON SLOPES ABOVE GROUND PIPE INSTALLATIONS

RECOMMENDED BY THE SAN DIEGO REGIONAL STANDARDS COMMITTEE

Allan A. Kershaw — Coordinator R.C.E. 19807 — Dec. 1975 Date

DRAWING NUMBER 1-23

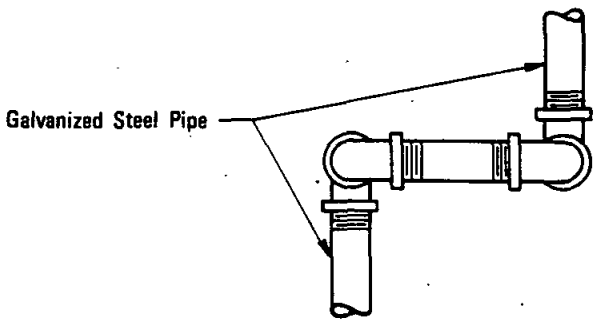

PLAN

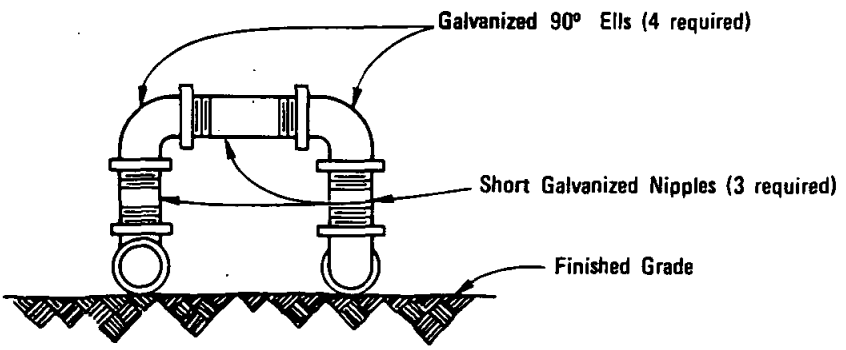

ELEVATION

NOTES

1. Double swing joint shall be used where changes of grade and alignment occur simultaneously.
2. Double swing joint shall be used for expansion joint on long runs of galvanized pipe. (300' maximum runs)

LEGEND ON PLANS

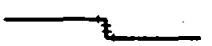

RECOMMENDED BY THE SAN DIEGO REGIONAL STANDARDS COMMITTEE Coordinator R.C.E. 19807 — Dec. 1975 Date	SAN DIEGO REGIONAL STANDARD DRAWING	Revision	By	Approved	Date
	DOUBLE SWING JOINT ABOVE GROUND PIPE INSTALLATIONS				
DRAWING NUMBER I-24					

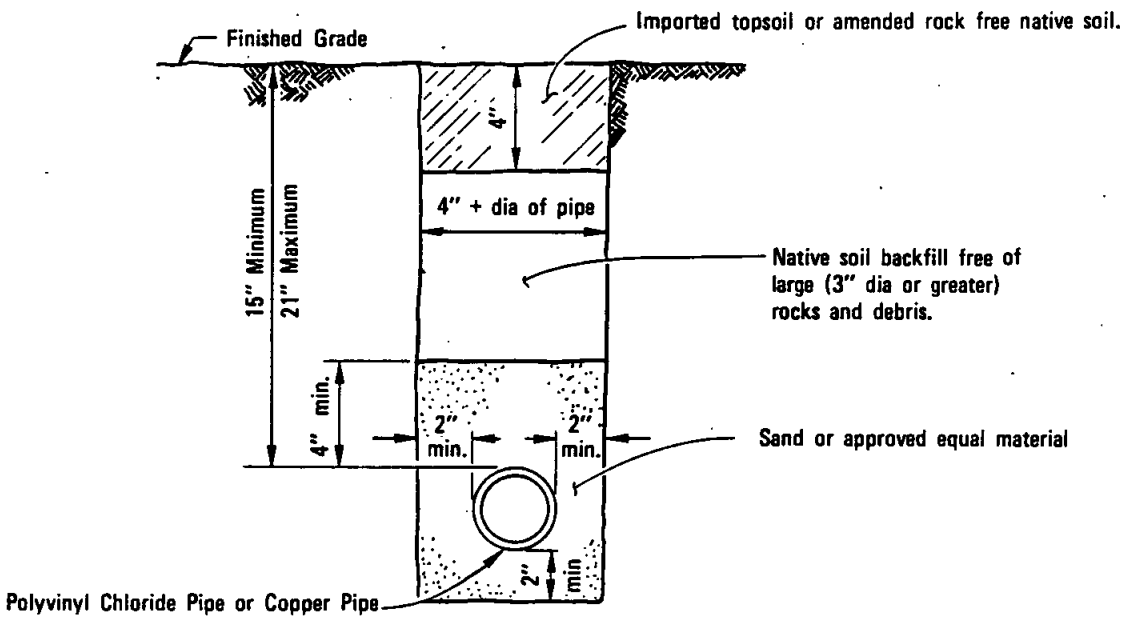

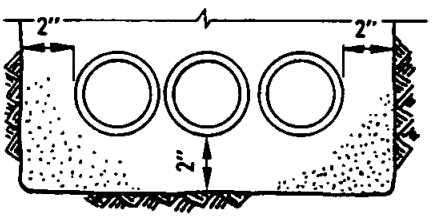

Details not shown are same as above.

Multiple Pipe Installation Detail
(non-pressure pipe only, see Note 6 for pressure pipe)

NOTES

1. Backfill material shall be compacted to a relative compaction of 90% or more.
2. All P.V.C. pipe shall lay free in the trench with no induced strain and with sufficient allowance for expansion and contraction as recommended by the manufacturer.
3. Teflon tape, ¾" wide, shall be used on all threaded connections.
4. The letter W shall be stamped or chiseled on the improvement (curb–sidewalk) directly above the pressure pipeline.
5. All plastic pressure pipe under pavement shall be installed in a P.V.C. sleeve.
6. Minimum clearance between pressure pipes shall be 2 inches.

Revision	By	Approved	Date
Title	TRP	M.B.	10-82
Note 6	RC	M.B.	5-86
Title, 6	RC	A.A.	7-88

SAN DIEGO REGIONAL STANDARD DRAWING

TRENCH DETAIL P.V.C. AND/OR COPPER PIPE (3" AND SMALLER)

RECOMMENDED BY THE SAN DIEGO REGIONAL STANDARDS COMMITTEE

Allan A. Kershner — Dec. 1975
Coordinator R.C.E. 19807 — Date

DRAWING NUMBER **I-25**

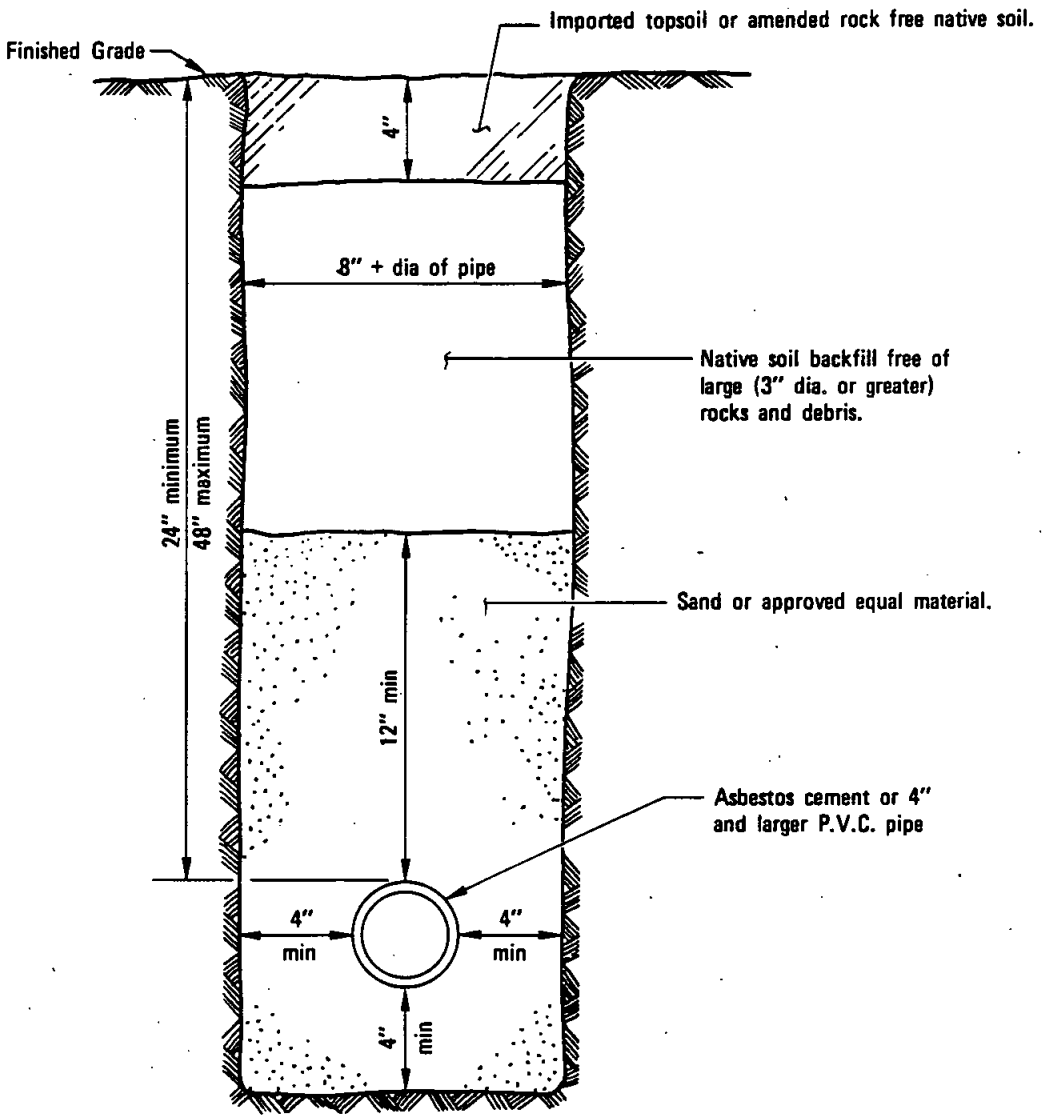

NOTES

1. Backfill material shall be compacted to a relative compaction of 90% or more.
2. All pipeline fittings shall be cast iron, short body, Class 250, cement mortar lined and polyethylene wrapped. All fittings shall have thrust blocks or anchors.
3. The letter W shall be stamped or chiseled on the improvement (curb–sidewalk) directly above the pressure pipeline.
4. No P.V.C. pressure pipeline shall be installed within 3' of any line, unless otherwise specified.

RECOMMENDED BY THE SAN DIEGO REGIONAL STANDARDS COMMITTEE Allan A. Kershaw Dec. 1975 Coordinator R.C.E. 19807 Date	SAN DIEGO REGIONAL STANDARD DRAWING	Revision	By	Approved	Date
		Title	RP	M.B.	10-82
	TRENCH DETAIL — ASBESTOS CEMENT PIPE AND 4" AND LARGER P.V.C.	Title			7-88
DRAWING NUMBER I-26					

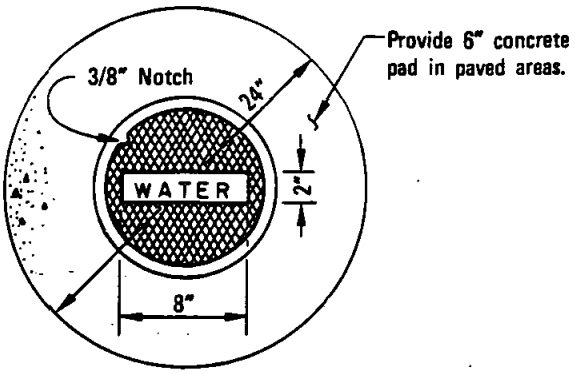

PLAN

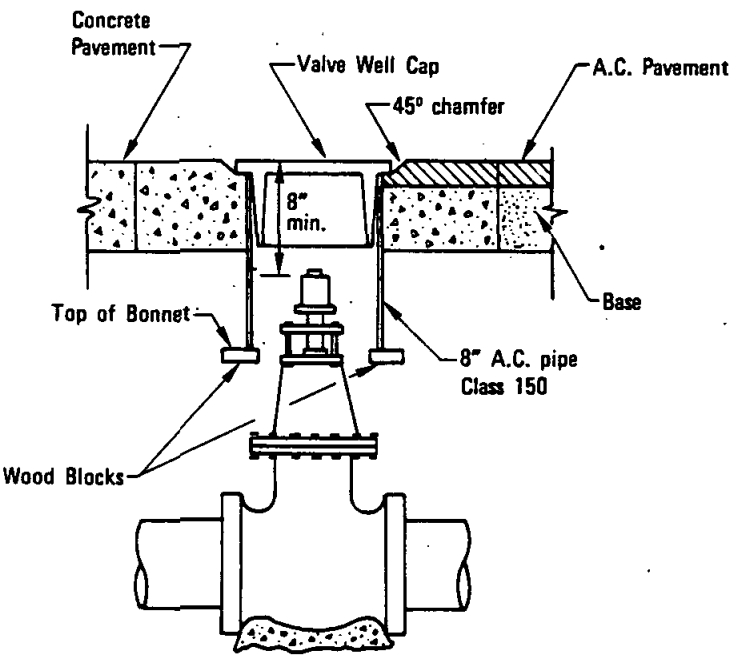

ELEVATION

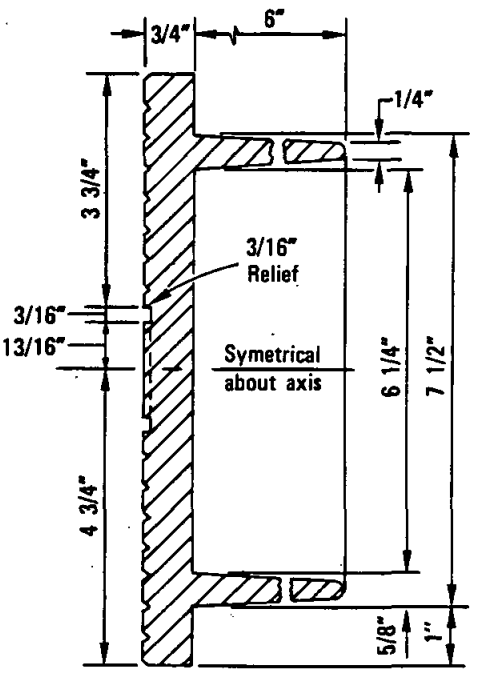

CAST IRON
VALVE WELL CAP

LEGEND ON PLANS

Revision	By	Approved	Date
Dimension		A.H.	7-88

SAN DIEGO REGIONAL STANDARD DRAWING

VALVE WELL AND COVER

RECOMMENDED BY THE SAN DIEGO REGIONAL STANDARDS COMMITTEE

Coordinator R.C.E. 19807 — Dec. 1975 Date

DRAWING NUMBER I-27

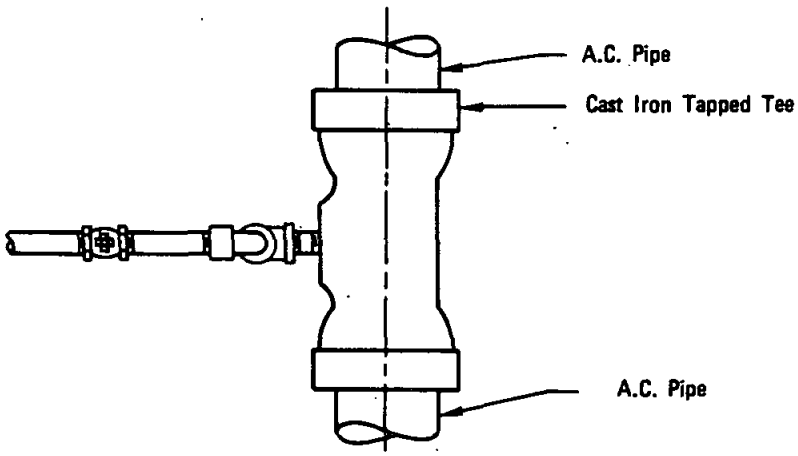

PLAN

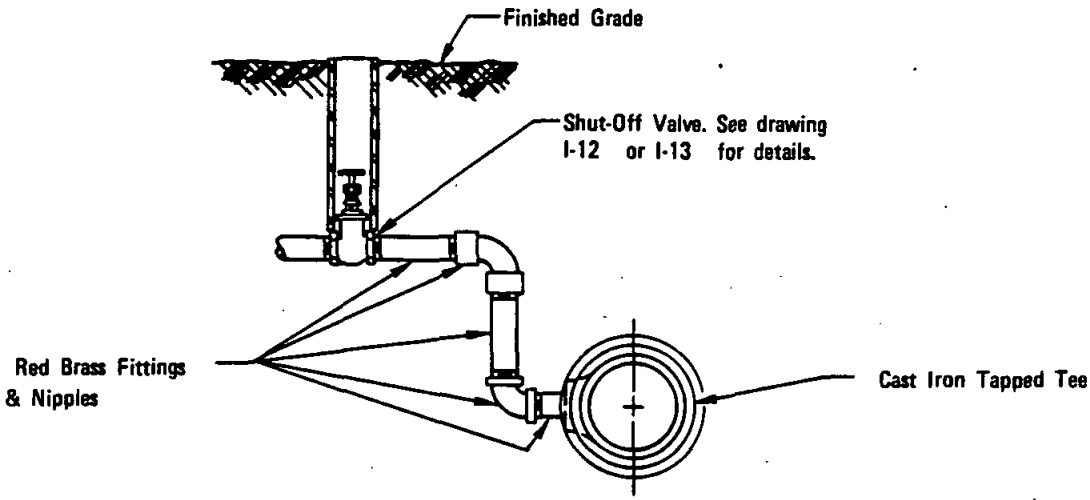

ELEVATION

NOTES

1. Close nipples shall not be used.
2. Cast iron tapped tee shall be short body, class 250, cement mortar lined and polyethylene wrapped.
3. All tapped tees shall have a type - A support block. See Standard Drawing W-19.

LEGEND ON PLANS

RECOMMENDED BY THE SAN DIEGO REGIONAL STANDARDS COMMITTEE Allan O Kashani Dec. 1975 Coordinator R.C.E. 19807 Date	SAN DIEGO REGIONAL STANDARD DRAWING	Revision	By	Approved	Date
		Reference	TRP	M.B.	10-82
DRAWING NUMBER I-28	CONNECTION DETAIL FOR NEW ASBESTOS CEMENT SUPPLY MAINS				

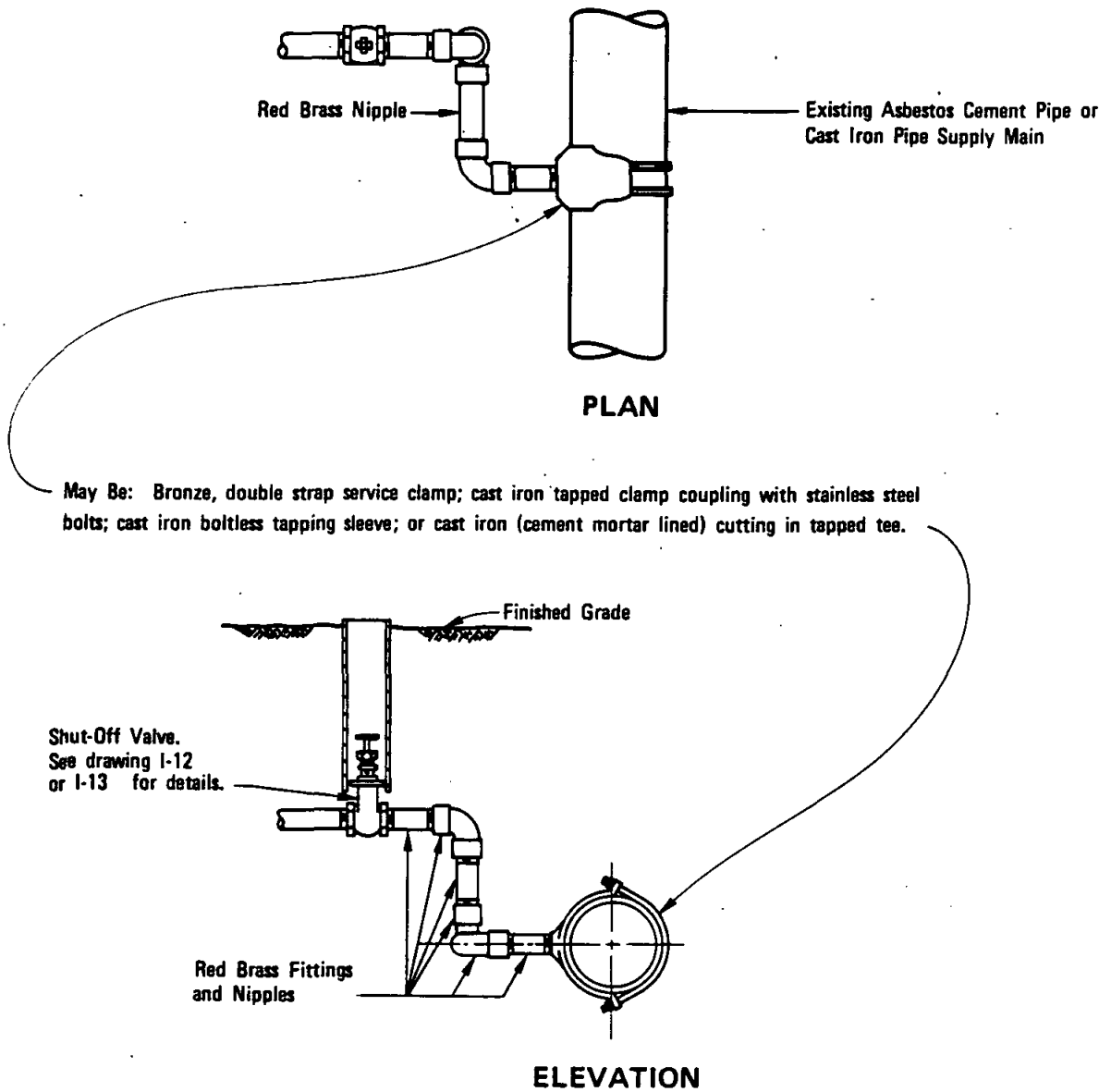

NOTE
Close nipples shall not be used.

LEGEND ON PLANS

Revision	By	Approved	Date
Reference	TRP	M. B.	10-82

SAN DIEGO REGIONAL STANDARD DRAWING

CONNECTION DETAIL FOR EXISTING SUPPLY MAINS

RECOMMENDED BY THE SAN DIEGO REGIONAL STANDARDS COMMITTEE

Allan O. Kaufman — Dec. 1975
Coordinator R.C.E. 19807 — Date

DRAWING NUMBER I-29

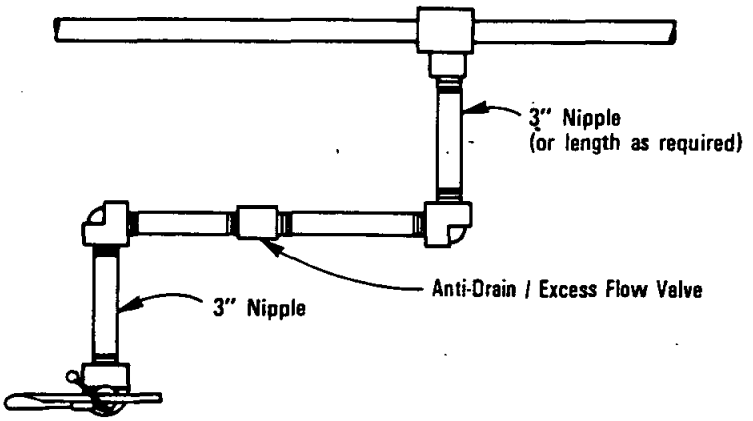

PLAN

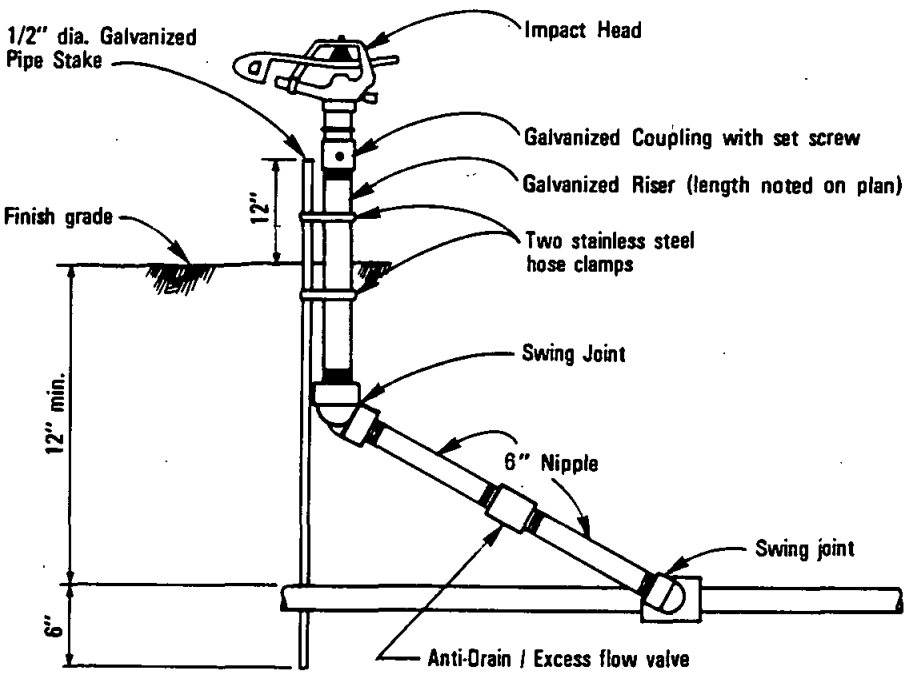

ELEVATION

NOTES

1. All fittings shall be P.V.C. Sch. 40 (except as noted).
2. All nipples shall be P.V.C. Sch. 80 (except as noted).
3. Teflon tape, 3/4" wide, shall be used on all threaded connections.
4. Short nipples shall not be used.

LEGEND ON PLANS

Show a number to indicate type head

RECOMMENDED BY THE SAN DIEGO REGIONAL STANDARDS COMMITTEE Coordinator R.C.E. 25291 Date	SAN DIEGO REGIONAL STANDARD DRAWING	Revision	By	Approved	Date
		Notes	JP		5-92
	IMPACT HEAD (WITH SWING JOINT)				
DRAWING NUMBER I-30					

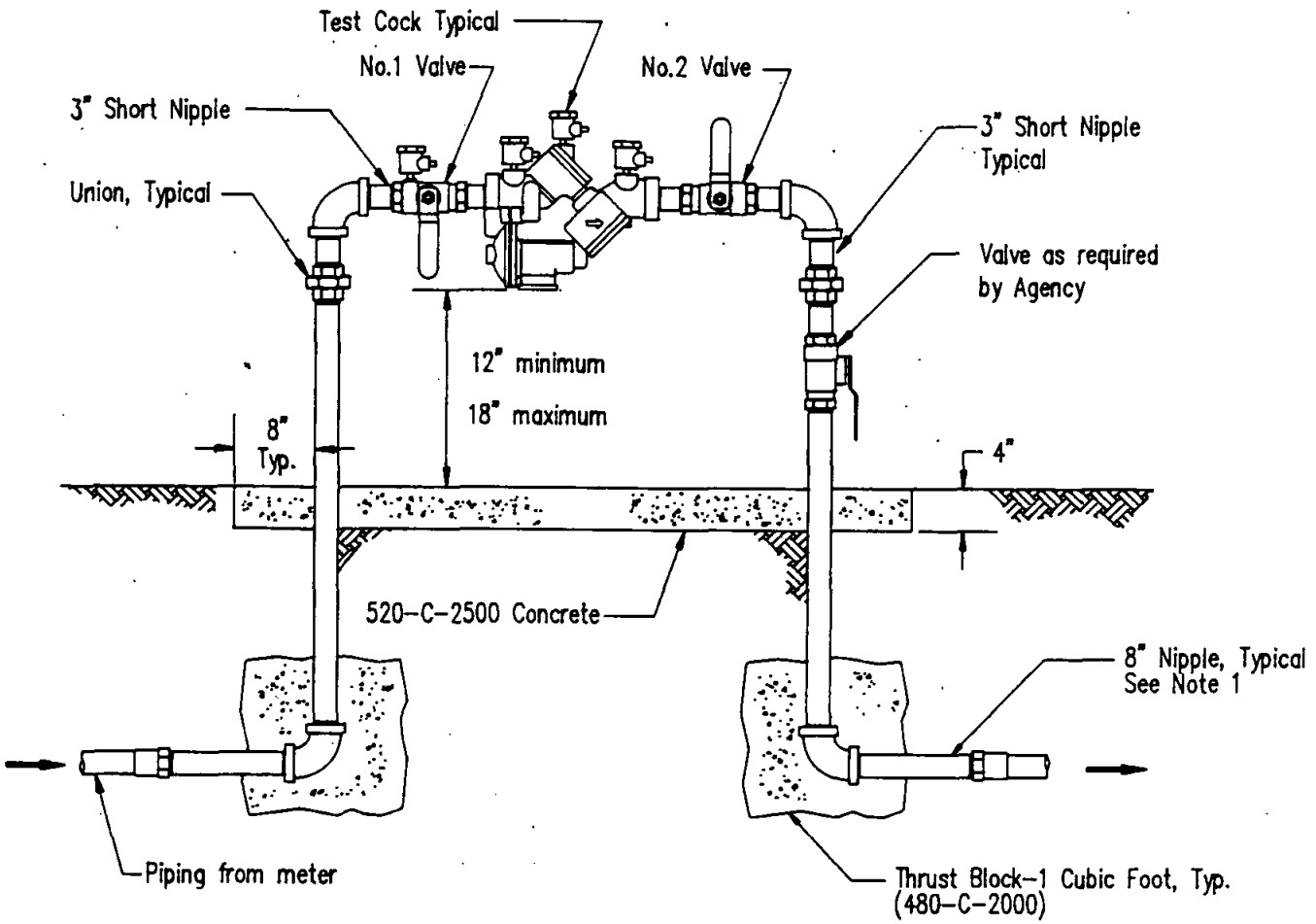

NOTES:

1. All risers, unions, elbows and nipples shall be red brass.
2. Close nipples shall not be used.
3. Teflon tape 3/4" wide shall be used on all threaded connections.
4. Concrete pad shall be 18" wide.
5. Backflow preventer assembly shall be tested upon installation by a certified backflow device tester. Contractor shall provide the Engineer with written test results completed by certified backflow tester prior to the backflow preventor assembly's acceptance by the Engineer.

LEGEND ON PLANS

Revision	By	Approved	Date

SAN DIEGO REGIONAL STANDARD DRAWING

BACKFLOW PREVENTER REDUCED PRESSURE PRINCIPLE ASSEMBLY - 2" AND SMALLER

RECOMMENDED BY THE SAN DIEGO REGIONAL STANDARDS COMMITTEE

Chairman RCE 25702 Date 5-1-92

DRAWING NUMBER I-31

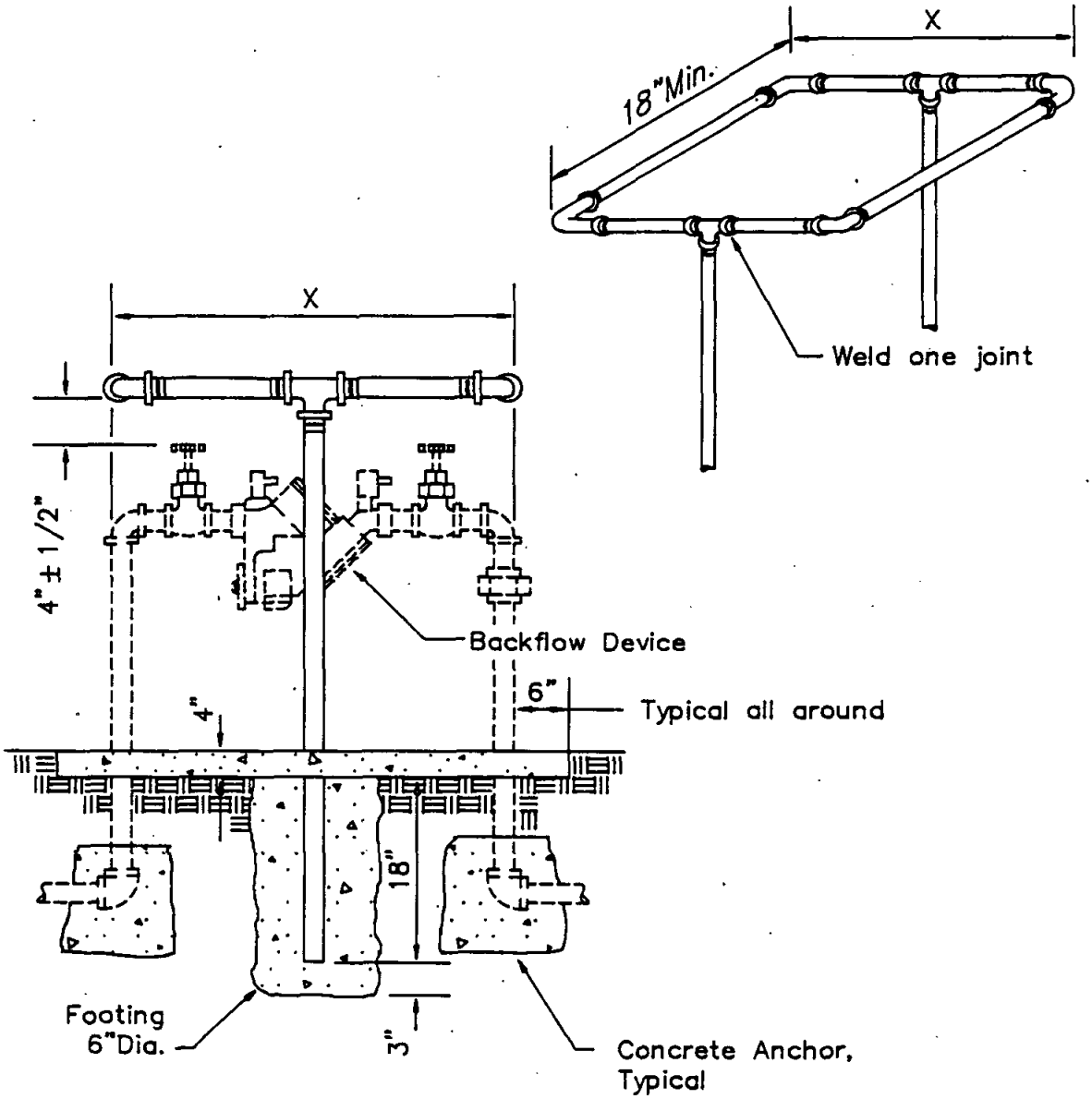

NOTES:

1. All pipes shall be 1 1/2–inch diameter galvanized schedule 40 steel.
2. X dimension shall be sized to accomodate type of backflow device being protected.
3. Paint entire fence with one coat metal primer and two coats of exterior yellow colored enamel.
4. Guard fence shall be centered on backflow device.

RECOMMENDED BY THE SAN DIEGO REGIONAL STANDARDS COMMITTEE Chairman — Date SEPT. 1988	SAN DIEGO REGIONAL STANDARD DRAWING	Revision	By	Approved	Date
	PROTECTIVE GUARD FENCE FOR BACKFLOW DEVICE				
DRAWING NUMBER I-32					

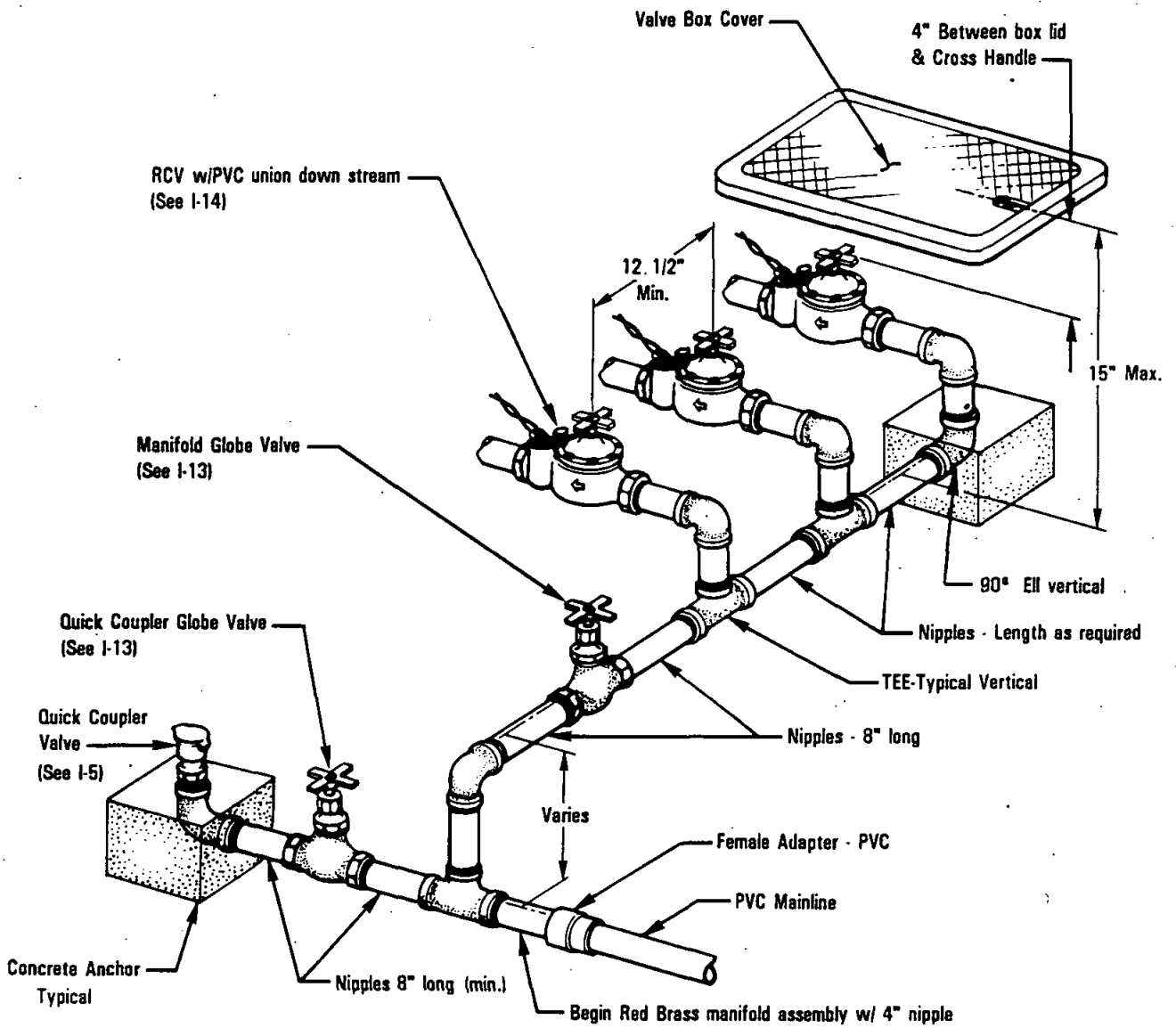

NOTES

1. Typical remote control valve assembly : All nipples, risers,tees and elbows are to be red brass.
2. Install largest remote control valve adjacent to gate valve and maintain uniform decrease.
3. Close nipples are not allowed.
4. Install individual valve boxes for each remote control valve.
5. Locations of Quick Coupler valves shall be as shown on plans.
6. Tee vertically from Mainline intersection to reach the 15" maximum depth.

Revision	By	Approved	Date

SAN DIEGO REGIONAL STANDARD DRAWING

REMOTE CONTROL VALVE MANIFOLD ASSEMBLY

RECOMMENDED BY THE SAN DIEGO REGIONAL STANDARDS COMMITTEE

Chairman 5-1-92 Date

RCE 25902

DRAWING NUMBER I-33

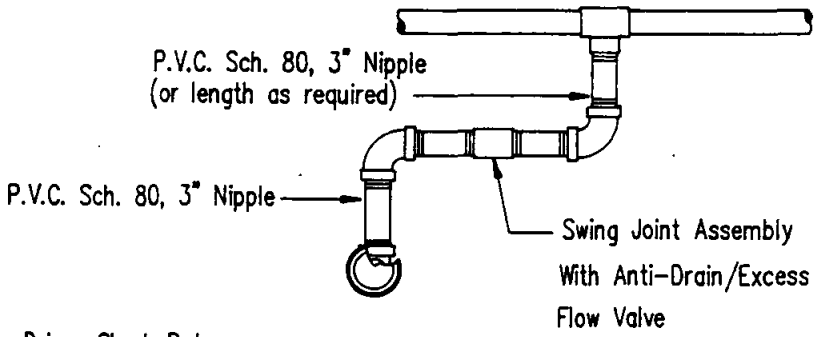

PLAN

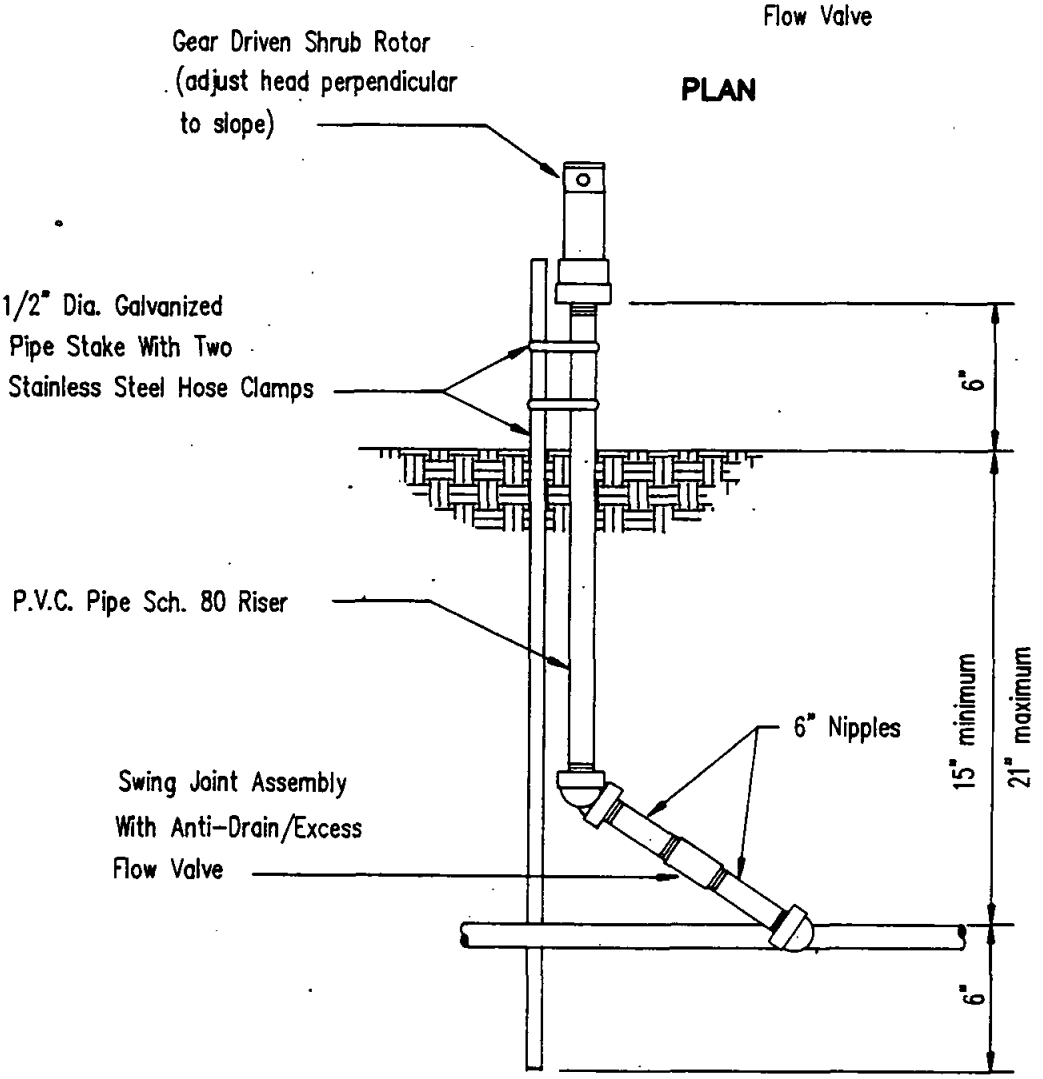

ELEVATION

NOTES:

1. All fittings shall be P.V.C. Sch. 40 (except as noted).
2. All nipples shall be P.V.C. Sch. 80 (except as noted).
3. Teflon tape, 3/4" wide, shall be used on all threaded connections.
4. Short nipples shall not be used.

LEGEND ON PLANS

Show a number to indicate head type

RECOMMENDED BY THE SAN DIEGO REGIONAL STANDARDS COMMITTEE Chairman RCE 25902 Date 5-11-92	SAN DIEGO REGIONAL STANDARD DRAWING	Revision	By	Approved	Date
DRAWING NUMBER I-34	SHRUB SPRINKLER HEAD ROTARY TYPE				

LANDSCAPING

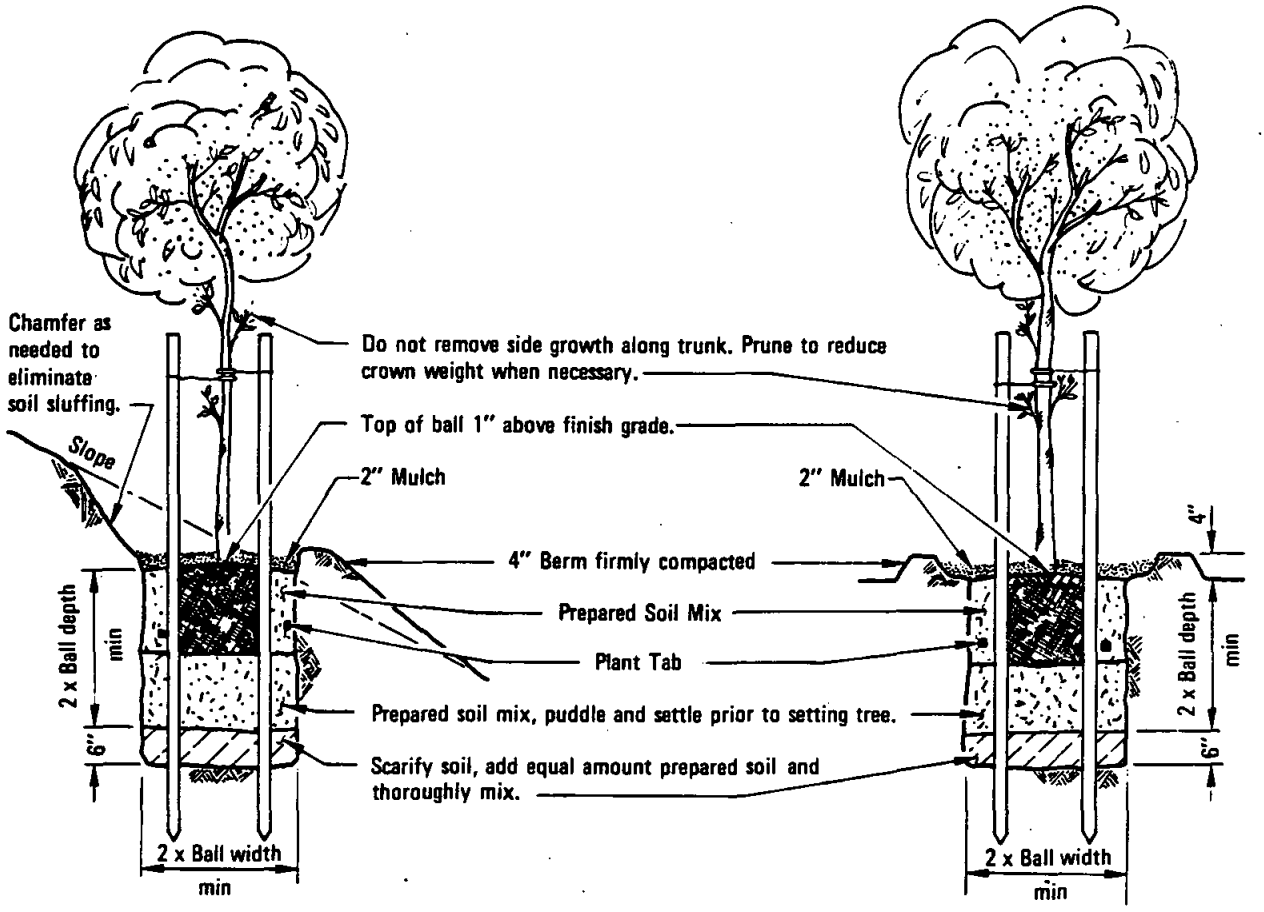

TREE PLANTING - SLOPES

TREE PLANTING - LEVEL GROUND

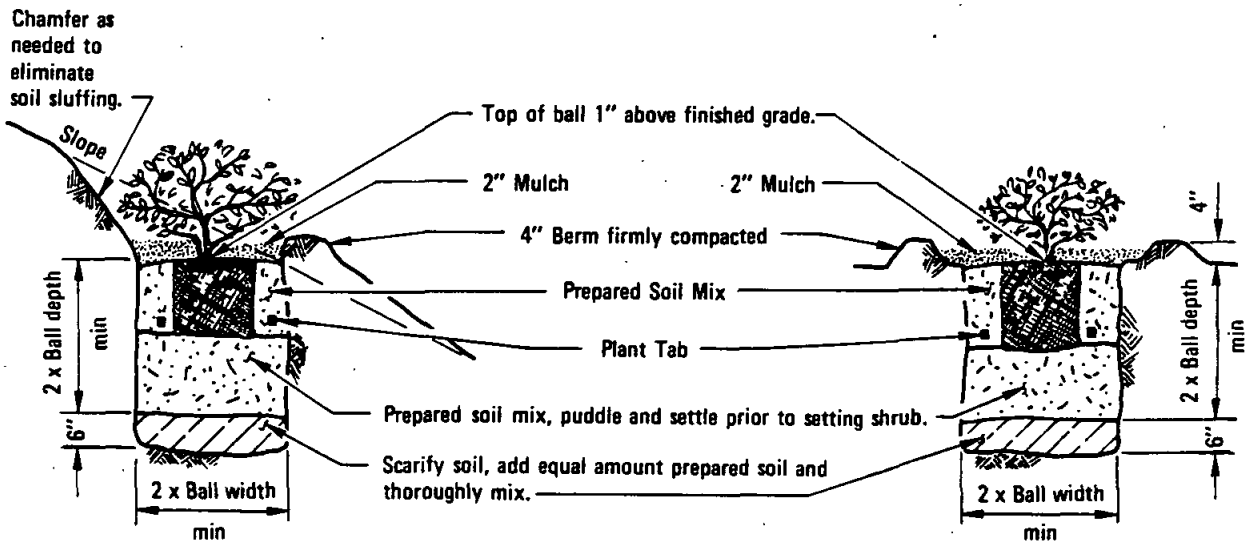

SHRUB PLANTING - SLOPES

SHRUB PLANTING - LEVEL GROUND

Revision	By	Approved	Date

SAN DIEGO REGIONAL STANDARD DRAWING

TREE AND SHRUB PLANTING

RECOMMENDED BY THE SAN DIEGO REGIONAL STANDARDS COMMITTEE

Coordinator R.C.E. 19807 — Dec. 1975 Date

DRAWING NUMBER L-1

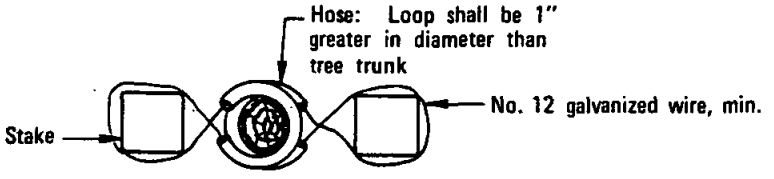

PLAN

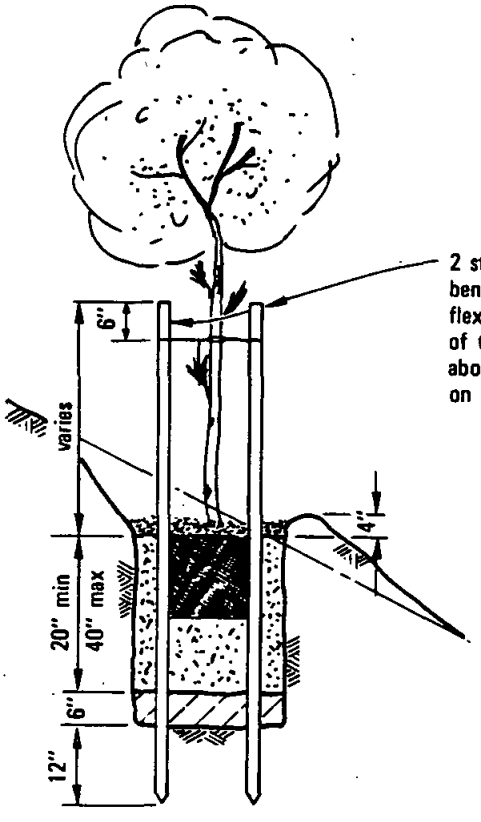

2 stakes and 2 ties. Tie tree trunk 6" above bending moment of tree. Tie should provide flexibility of trunk but not allow rubbing of trunk against stake. Cut stakes off 6" above ties. For single stake trees, place stake on windward side of tree.

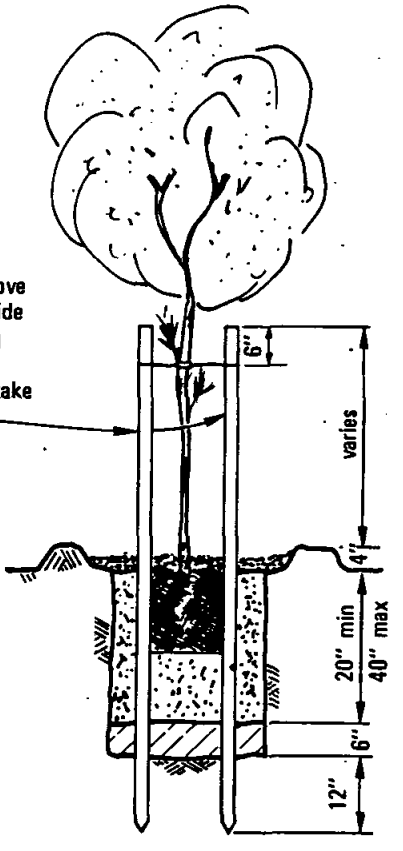

TREE STAKING – SLOPES

TREE STAKING – LEVEL GROUND

RECOMMENDED BY THE SAN DIEGO REGIONAL STANDARDS COMMITTEE	SAN DIEGO REGIONAL STANDARD DRAWING	Revision	By	Approved	Date
Allen A. Kershaw Dec. 1975 Coordinator R.C.E. 19807 Date		Plan	SC	D. S.	7.79
DRAWING NUMBER L-2	TREE STAKING				

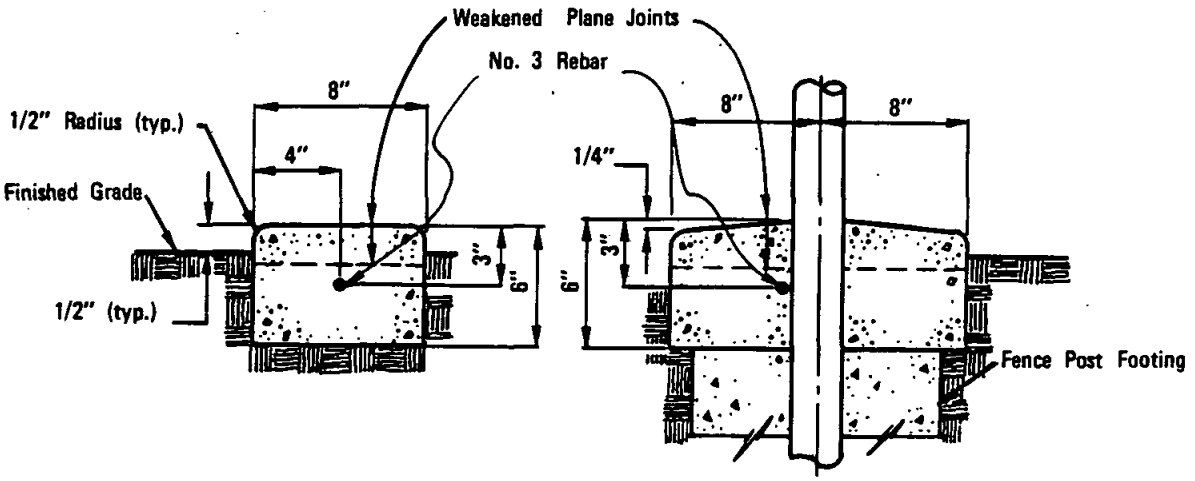

TYPE A
SHRUB AREAS

TYPE B
UNDER FENCES

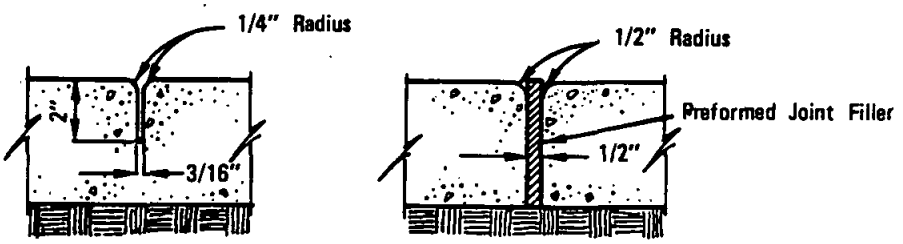

WEAKENED PLANE JOINT
MAX. 20 FT. O. C.

EXPANSION JOINT
MAX. 120 FT. O. C.

NOTES:

1. Rebar shall be continuous with 12 inch overlap at splices.
2. Concrete shall be class 520-C-2500 and same color as any adjacent concrete.
3. Install weakened plane joints at each fence post.
4. Install expansion joints where the mowing strip abuts any concrete improvement.

Revision		Approved	Date
Conc.	C	M.B	5-86

SAN DIEGO REGIONAL STANDARD DRAWING

CONCRETE MOWING STRIP

RECOMMENDED BY THE SAN DIEGO REGIONAL STANDARDS COMMITTEE

Harry R. Holt Oct 1982
Chairman R.C.E. C13768 Date

DRAWING NUMBER L-3

NOTES:

1. The location and species of each tree shall have prior approval of the Agency.
2. Sidewalk to be removed for each tree planting shall be saw cut full depth.
3. Fill below grate with 3/4" x No.4 clean crushed rock. If the grate is used for security, all bolts, nuts and washers shall be hot dipped galvanized. All steel items shall be hot dipped galvanized after fabrication.
4. Grate shall be two separate pieces, 2' x 4' in size, unless otherwise specified on the plans. Slot openings in grate design shall have 3/8" maximum width. Grates are to be designed in accordance with the latest edition of the Uniform Building Code, with a minimum uniform live load of 250 pounds per square foot in sidewalks, and have a method of symmetrical interior expandable rings/openings (detailed on the plans) as selected and approved by the agency.
5. Immediate notification shall be given to the Engineer of any below grade improvements encountered.

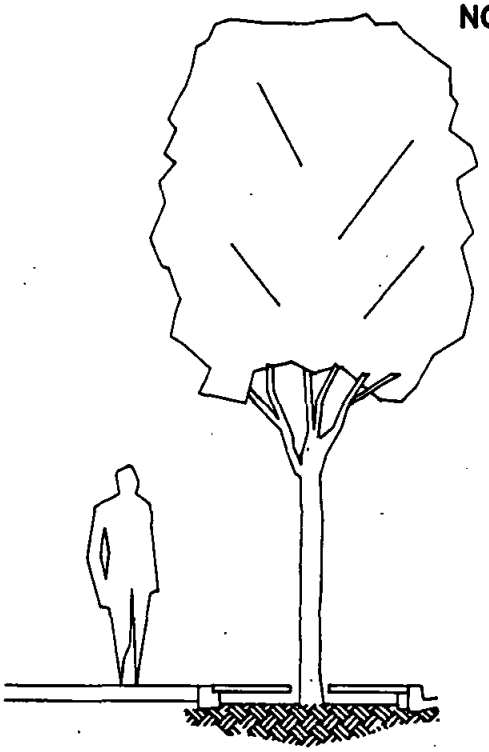

TREE SIZE

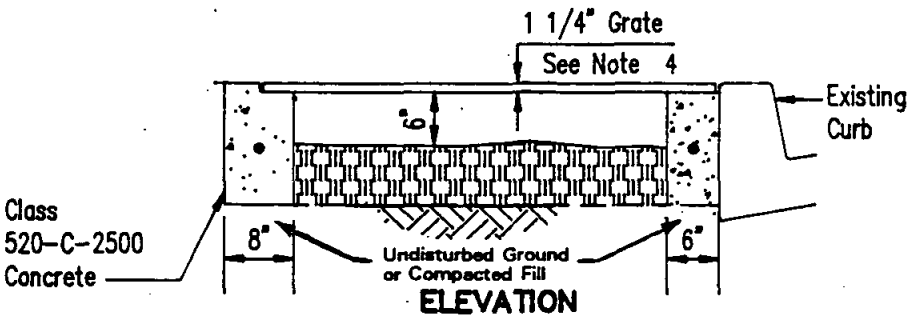

ELEVATION

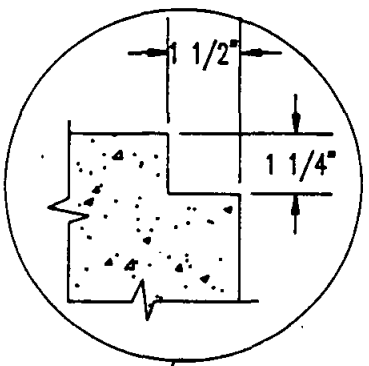

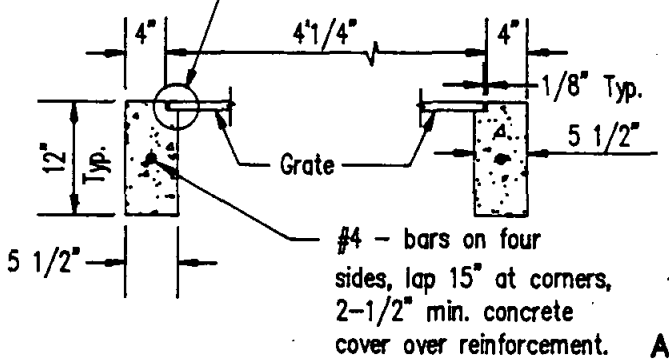

SECTION A-A

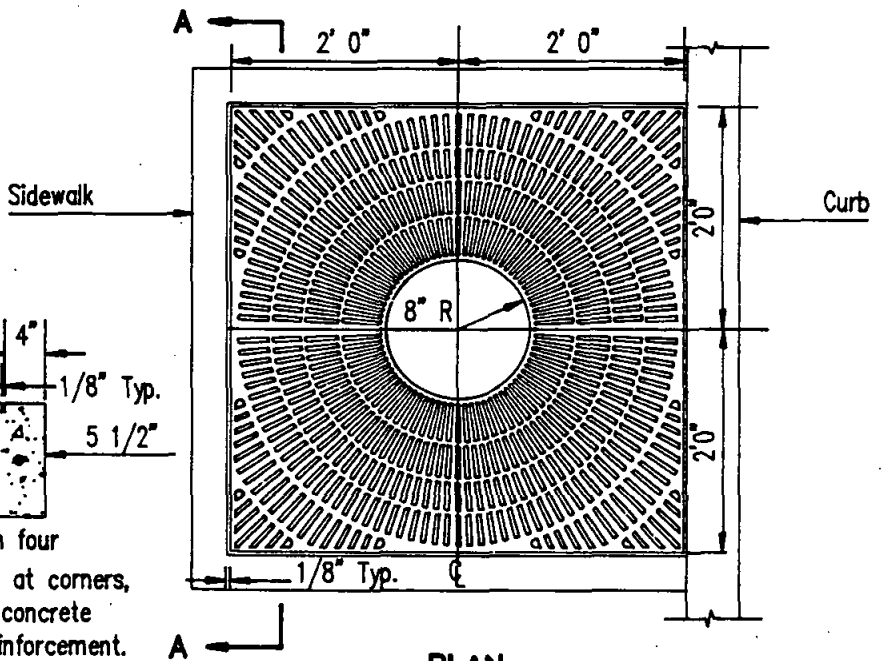

PLAN

RECOMMENDED BY THE SAN DIEGO REGIONAL STANDARDS COMMITTEE Chairman 5-11-92 Date	SAN DIEGO REGIONAL STANDARD DRAWING	Revision	By	Approved	Date
DRAWING NUMBER L-4	STEEL GRATE TREE WELL COVER				

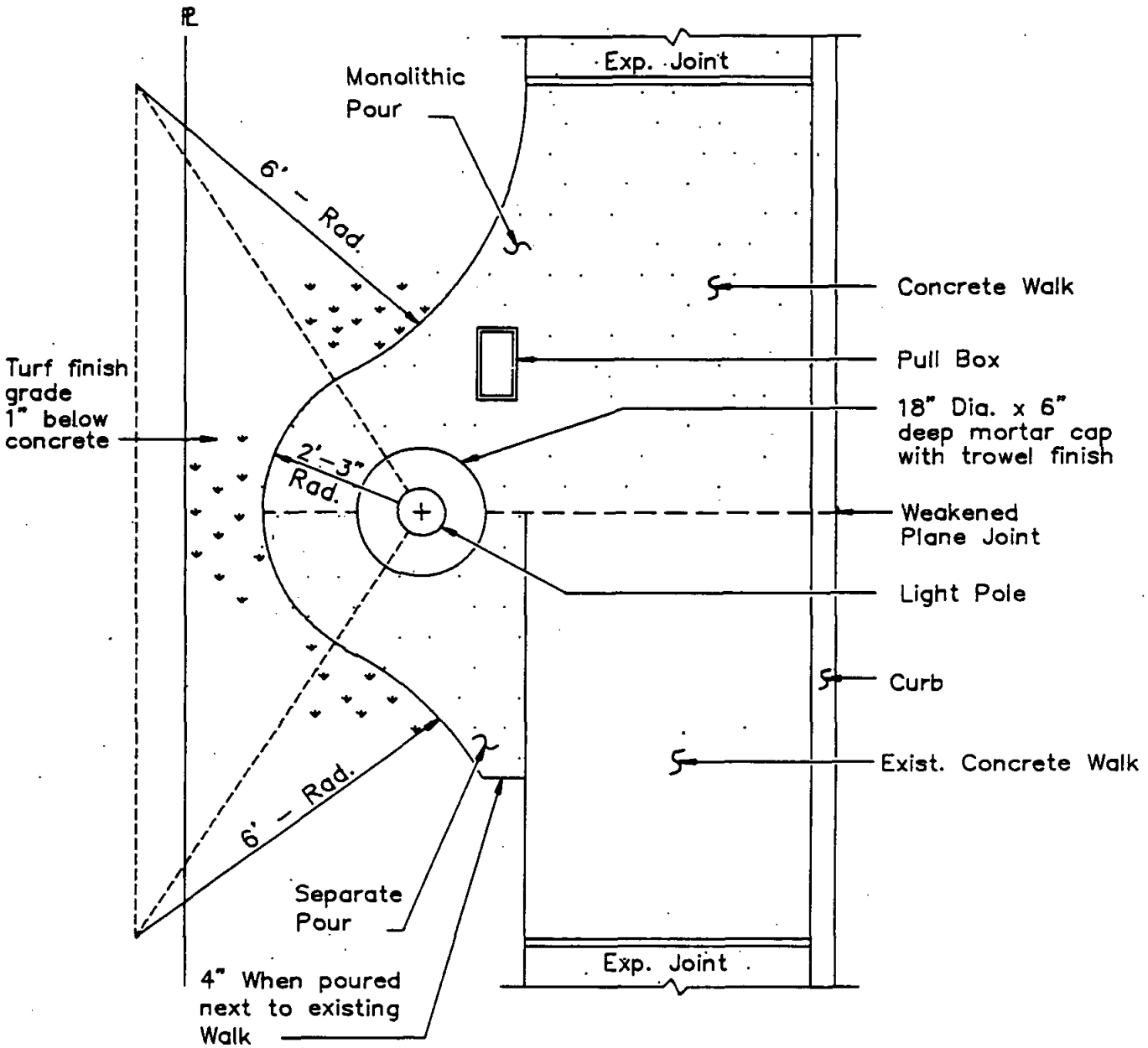

NOTES;

1. See Electric Plans for fixture/pole/footing details.
2. Use monolithic pour for new construction.
3. Poles shall be 6'-0" from face of curb, where applicable.
4. Pole pads shall drain at 2% minimum in same direction as sidewalk.
5. Concrete for pad shall be the same as specified for sidewalk.

Revision	By	Approved	Date

SAN DIEGO REGIONAL STANDARD DRAWING

LIGHT POLE PAD IN TURF AREAS

RECOMMENDED BY THE SAN DIEGO REGIONAL STANDARDS COMMITTEE

Chairman — Date SEPT. 1988

DRAWING NUMBER **L-5**

MISCELLANEOUS

M

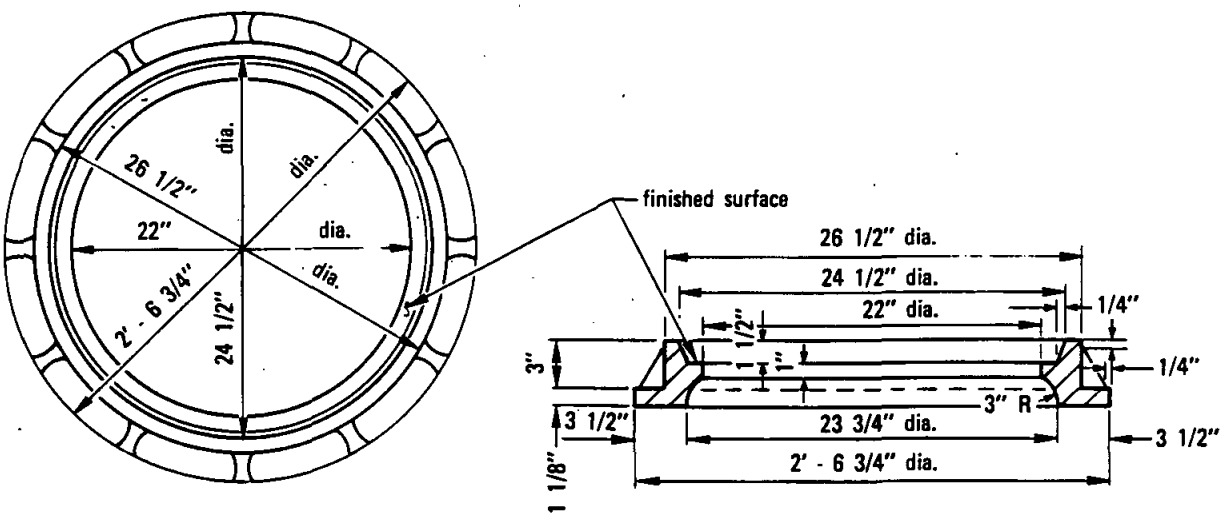

MANHOLE COVER FRAME
CAST IRON WT. 175 LB.

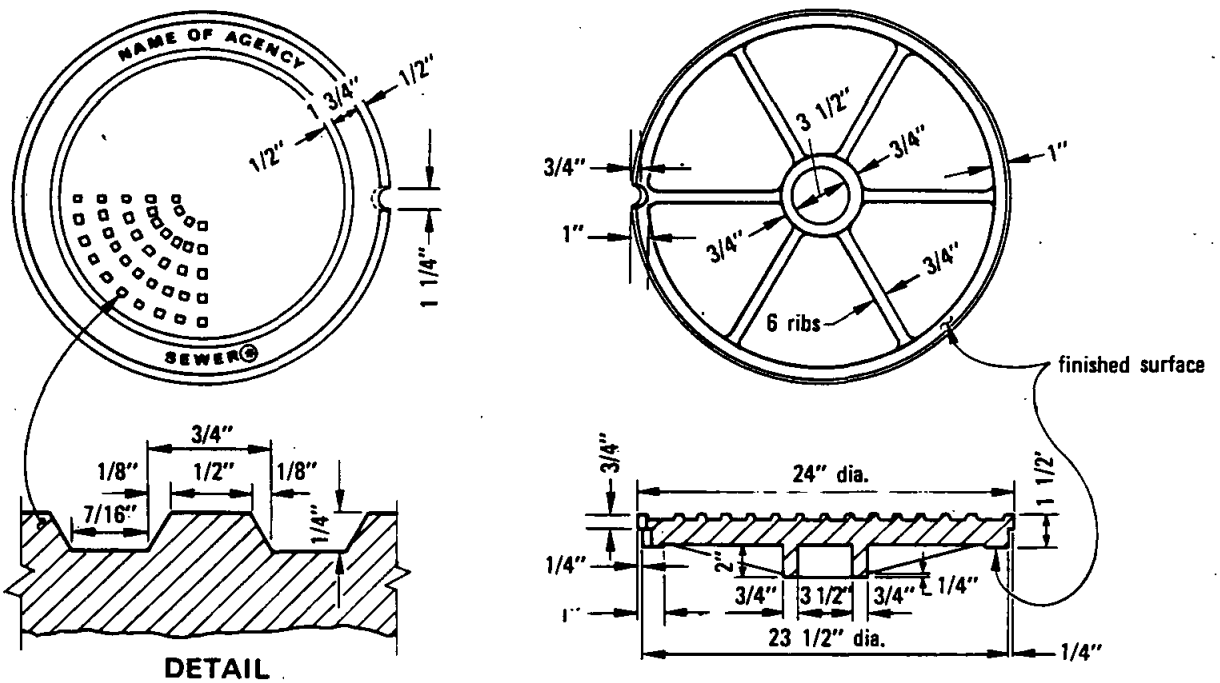

MANHOLE COVER
CAST IRON WT. 155 LB.

NOTES

1. Frame and cover shall be cast iron.
2. Weights: Frame 175 lbs.
   Cover 155 lbs.
3. Imported covers and frames shall have the country of origin marking in compliance with federal regulations.

®

FOR	MARK
Sewer Projects	Sewer
Storm Drain Projects	Storm Drain
Water Projects	Water

Revision	By	Approved	Date
Note 3	Lc	A.H.	7-88

SAN DIEGO REGIONAL STANDARD DRAWING

24" MANHOLE FRAME AND COVER HEAVY DUTY

RECOMMENDED BY THE SAN DIEGO REGIONAL STANDARDS COMMITTEE

Allan A. Kershaw — Dec. 1975
Coordinator R.C.E. 19807 — Date

DRAWING NUMBER **M-1**

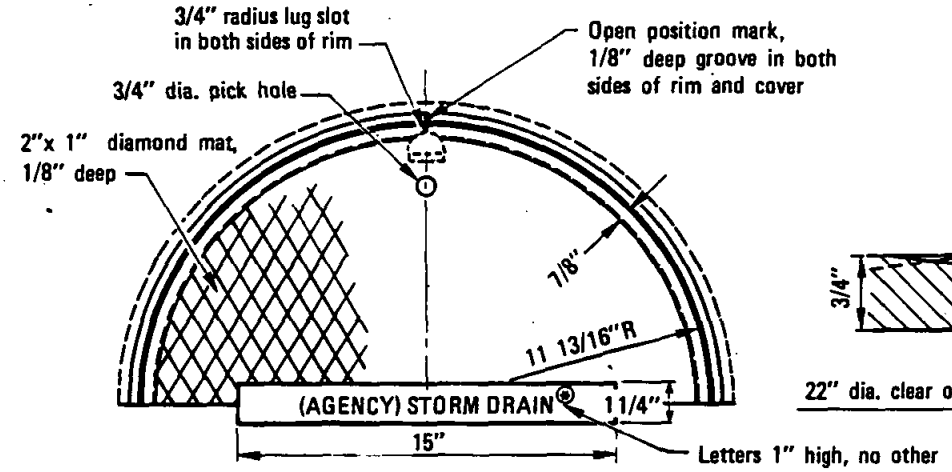

TOP OF FRAME & COVER

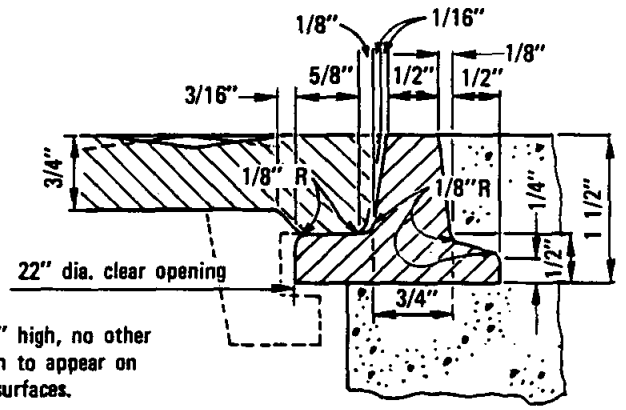

SECTION THROUGH RIM

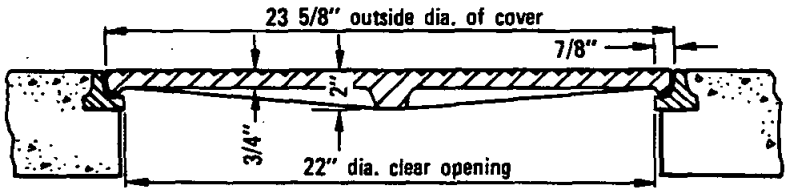

SECTION THROUGH FRAME & COVER

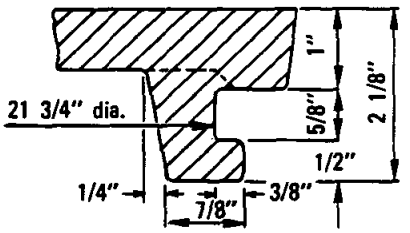

SECTION THROUGH LUG

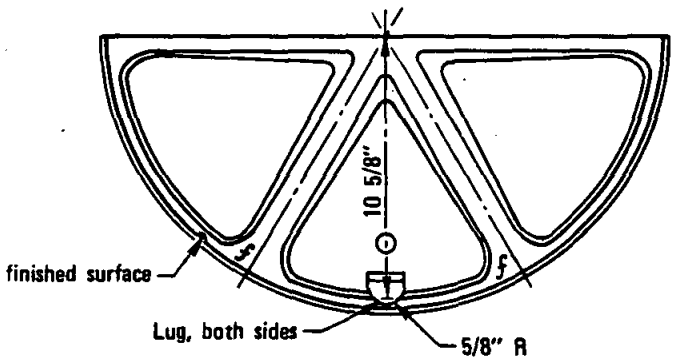

BOTTOM OF COVER

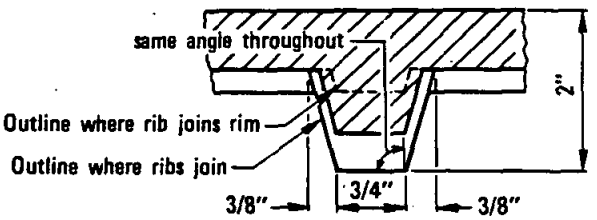

SECTION THROUGH RIB AT MID RADIUS

NOTES

1. Frame and cover shall be cast iron.
2. Frame and cover for use in non-traffic area only.
3. Weights: Frame 30 lbs
   Cover 100 lbs
4. Imported covers and frames shall have the country of origin marking in compliance with federal regulations.

®

FOR	MARK
Sewer Projects	Sewer
Storm Drain Projects	Storm Drain
Water Projects	Water

RECOMMENDED BY THE SAN DIEGO REGIONAL STANDARDS COMMITTEE

Allan A. Kershaw — Dec. 1975
Coordinator R.C.E. 19807 — Date

DRAWING NUMBER **M-2**

SAN DIEGO REGIONAL STANDARD DRAWING

24" MANHOLE FRAME AND COVER LIGHT DUTY

Revision	By	Approved	Date
Note 4	[illegible]	[illegible]	7/88

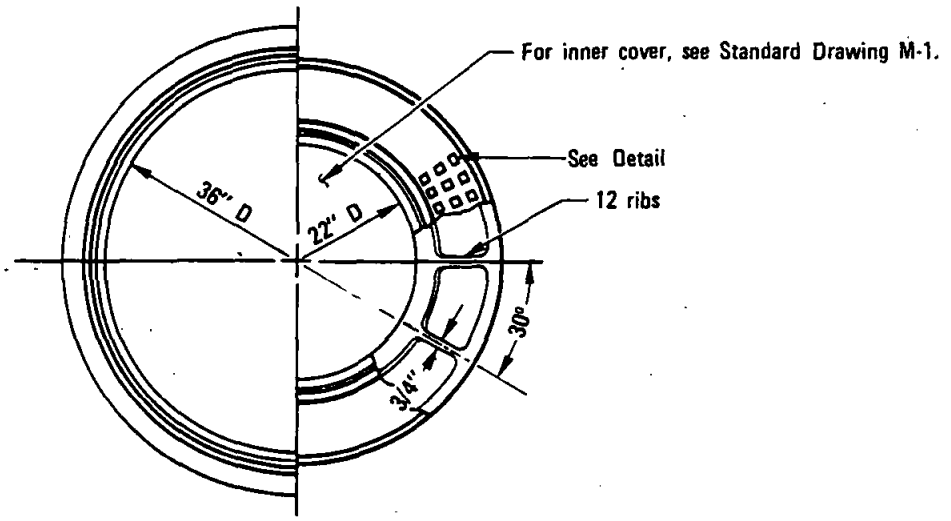

HALF PLAN FRAME & COVER

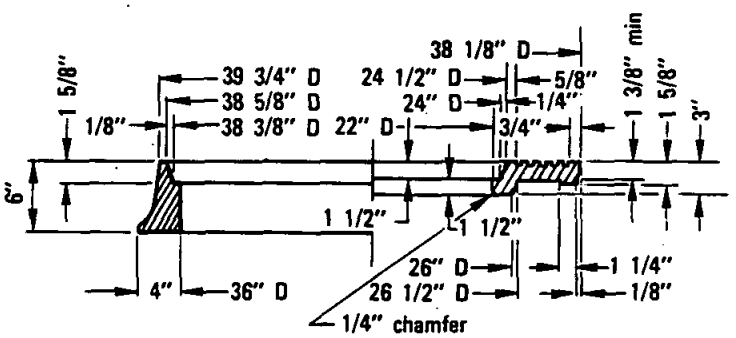

HALF SECTION FRAME & COVER

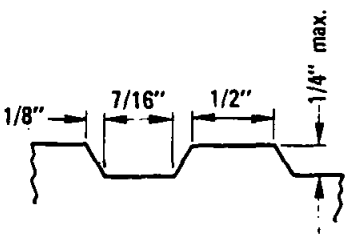

DETAIL

NOTES

1. Weights:
   - Inner Cover = 155 lbs
   - Outer Cover = 300 lbs.
   - Frame = 330 lbs.
2. Material: Cast Iron
3. Machine seats to prevent noise
4. Fillet radii to be 1/2".
5. Imported covers and frames shall have the country of origin marking in compliance with federal regulations.

Revision	By	Approved	Date
Note 5	LC	G.H.	7-88

SAN DIEGO REGIONAL STANDARD DRAWING

36" MANHOLE FRAME AND TWO CONCENTRIC COVERS HEAVY DUTY

RECOMMENDED BY THE SAN DIEGO REGIONAL STANDARDS COMMITTEE

Allan A. Kenkel — Dec. 1975
Coordinator R.C.E. 19807 — Date

DRAWING NUMBER **M-3**

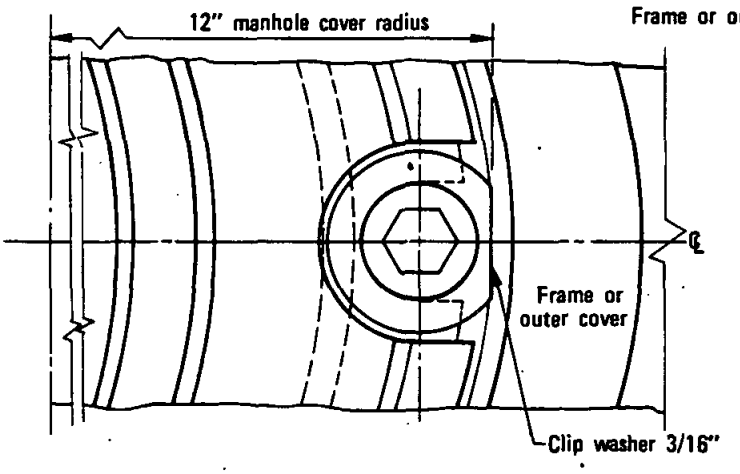

DETAIL PLAN

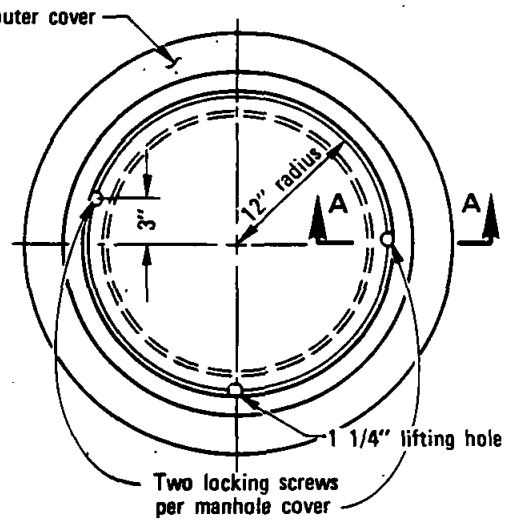

NOTE
For manhole frame and cover details, see Standard Drawing M-1 (single cover).

Drill and tap hole, install 5/8"x 1 1/2" stainless steel, hexagonal socket head cap screw (2 required), Unified National Coarse Thread – 11 per inch – with 1 1/2" O.D. x 11/16" I.D. x .078" thick stainless steel washer.
Use 18-8 stainless steel, A.S.T.M. Standard Specification A-276,Type 300 series.

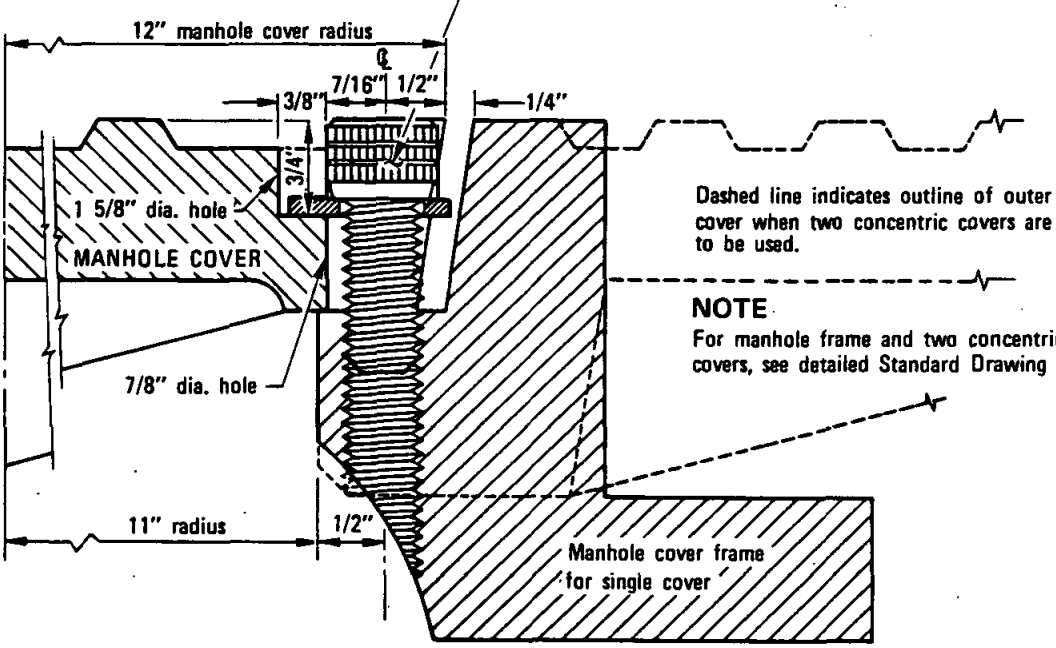

Dashed line indicates outline of outer cover when two concentric covers are to be used.

NOTE
For manhole frame and two concentric covers, see detailed Standard Drawing M-3.

SECTION A–A

RECOMMENDED BY THE SAN DIEGO REGIONAL STANDARDS COMMITTEE Allan O. Kaufman Dec. 1975 Coordinator R.C.E. 19807 Date	SAN DIEGO REGIONAL STANDARD DRAWING	Revision	By	Approved	Date
DRAWING NUMBER M-4	MANHOLE COVER LOCKING DEVICE				

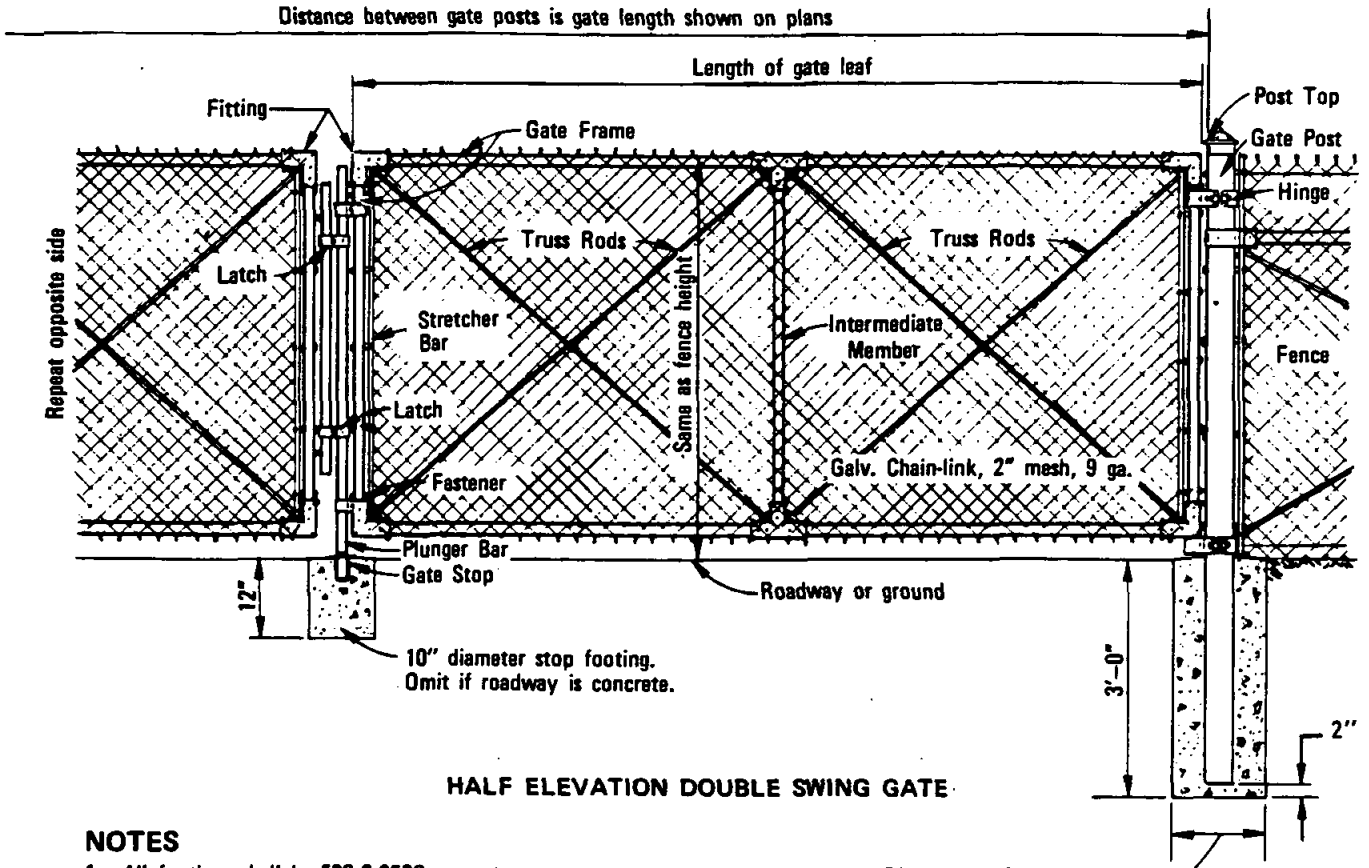

HALF ELEVATION DOUBLE SWING GATE

NOTES

1. All footings shall be 520-C-2500 concrete.
2. The following items shall be furnished and installed only when shown on the plans and/or called for in the special provisions:
   a. Barbed wire
   b. Extension post
3. Chain link fence shall conform to Section 206-6 of the Standard Specifications for Public Works Construction unless specifically noted on this drawing.

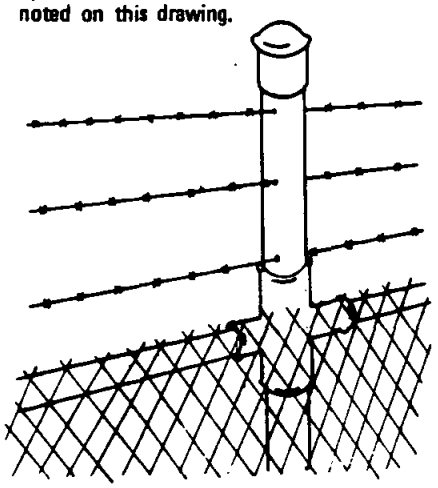

EXTENSION POST AND BARBED WIRE

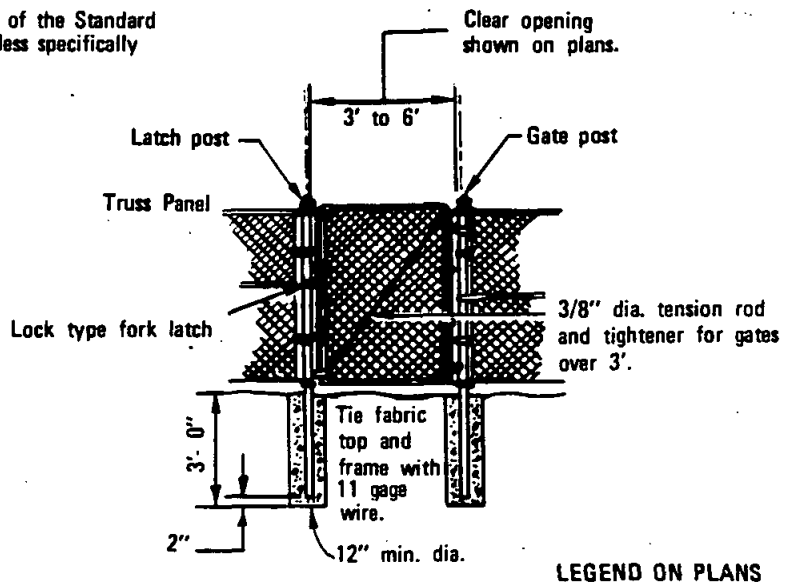

WALK GATE

LEGEND ON PLANS

Revision	By	Approved	Date
Walk gate	MA	M.B.	10-82
Conc.	S	MB	5-86

SAN DIEGO REGIONAL STANDARD DRAWING

CHAIN LINK GATE

RECOMMENDED BY THE SAN DIEGO REGIONAL STANDARDS COMMITTEE

Allan A. Kershaw — Dec. 1975
Coordinator R.C.E. 19807 — Date

DRAWING NUMBER M-5

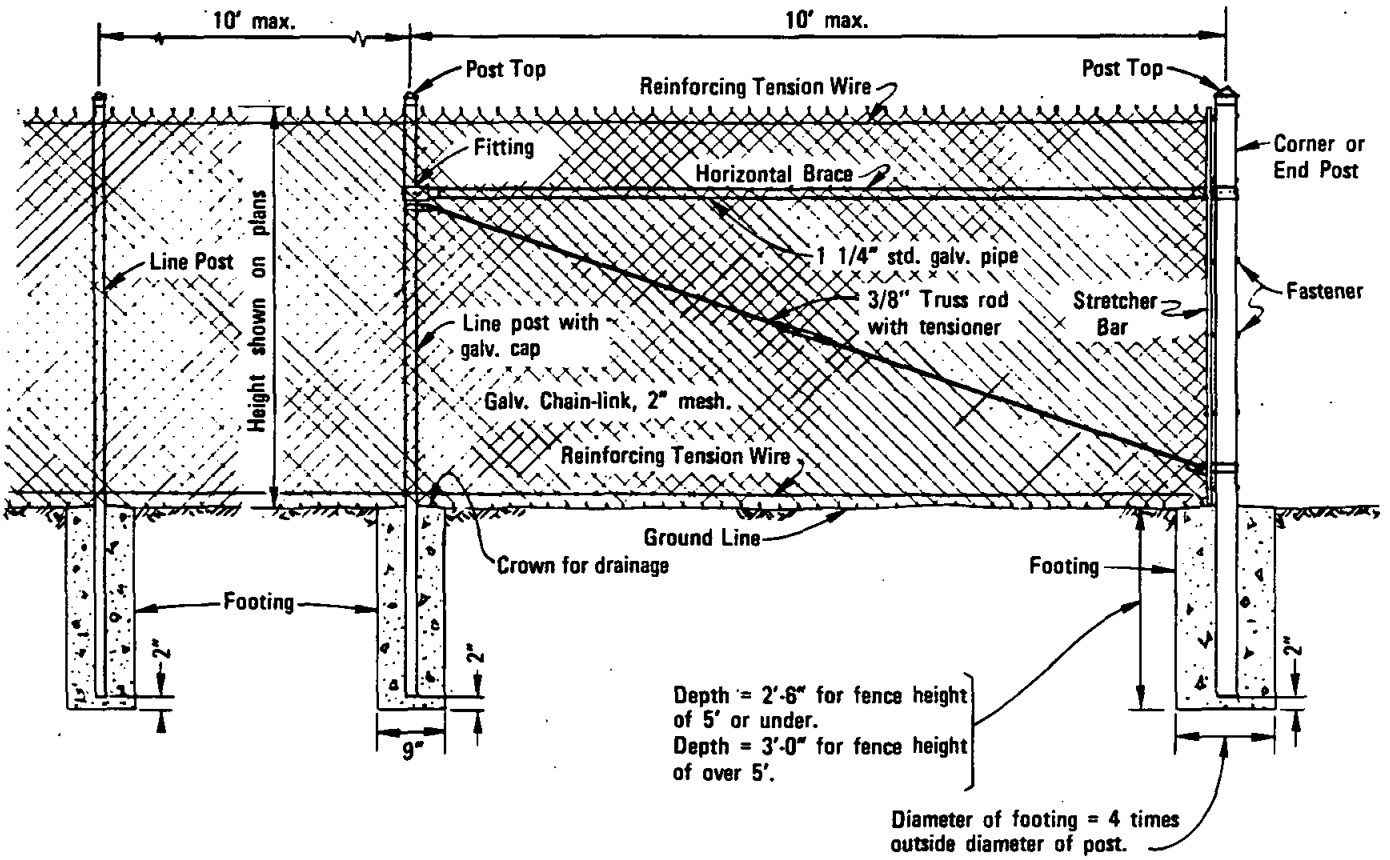

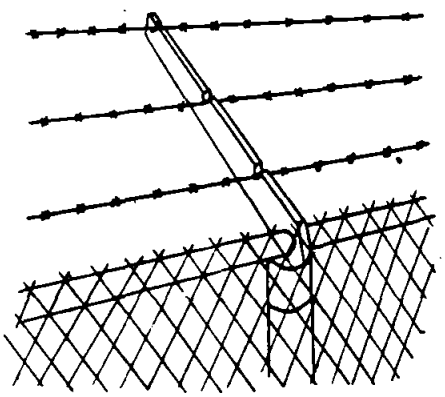

EXTENSION ARM AND BARBED WIRE

NOTES

1. All footings shall be 520-C-2500 concrete.
2. The following items shall be furnished and installed only when shown on the plans and/or called for in the special provisions:
   a. Barbed Wire
   b. Extension Arm
   c. Top Horizontal Rail
3. Chain link fence shall conform to Section 206-6 of the Standard Specifications for Public Works Construction unless specifically noted on this drawing.
4. See Standard Drawing M-20 for additional details.

LEGEND ON PLANS

RECOMMENDED BY THE SAN DIEGO REGIONAL STANDARDS COMMITTEE

Allan A. Kershaw — Dec. 1975
Coordinator R.C.E. 19807 — Date

DRAWING NUMBER **M-6**

SAN DIEGO REGIONAL STANDARD DRAWING

CHAIN LINK FENCE

Revision	By	Approved	Date
Note 3	TRP	M.B.	10-82
Notes	[illegible]	M.B.	5-86
Notes	[illegible]	A.H.	7-88

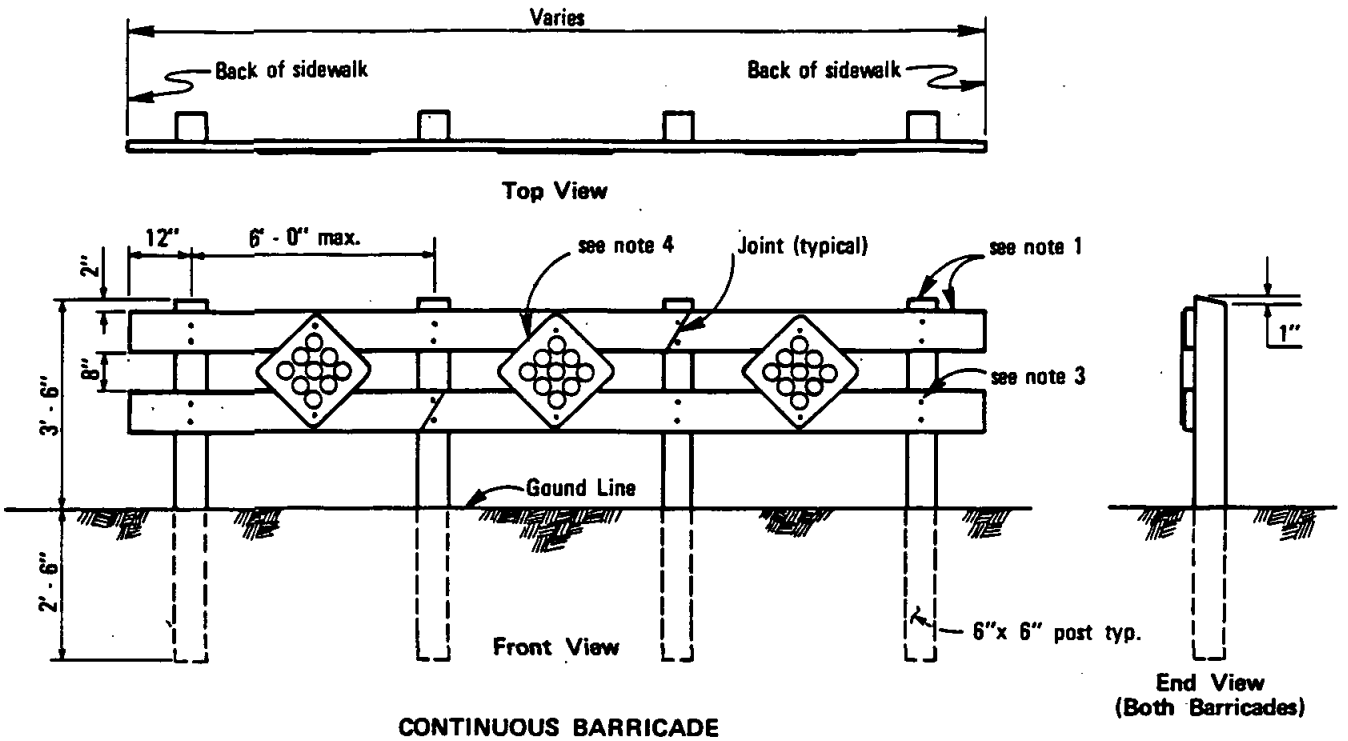

CONTINUOUS BARRICADE

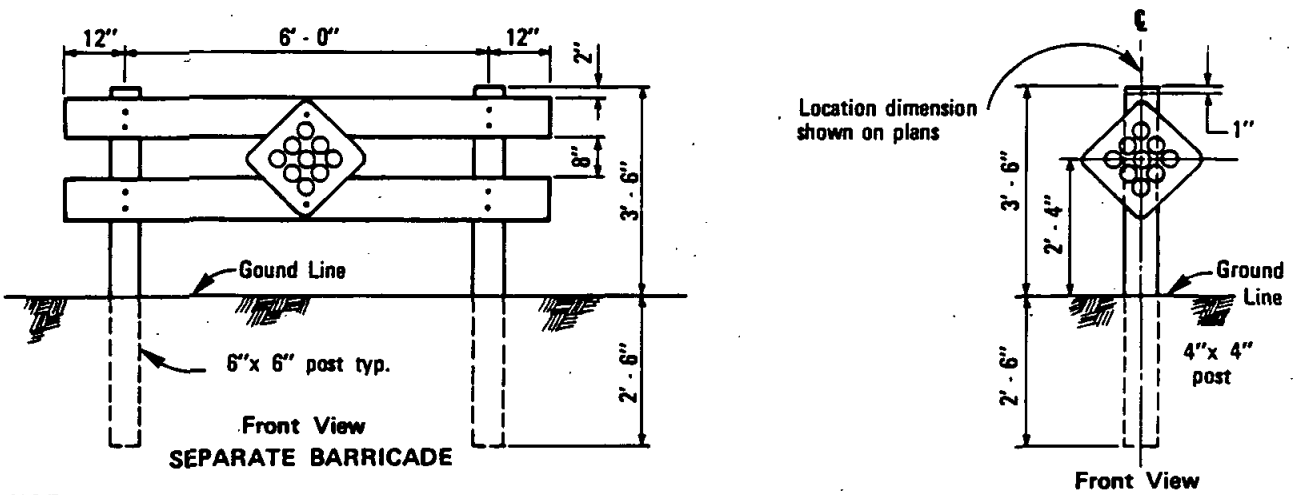

SEPARATE BARRICADE

GUARD POST

NOTES

1. Posts to be structural grade redwood or pressure treated (with wood preservative) Douglas Fir, surfaced four sides; cross pieces to be 2"x 8" select grade Douglas Fir, surfaced four sides.
2. All exposed portions of barricades shall be painted with two coats of white exterior enamel over prime coat.
3. Connections shall be made with 3/8"x 6" galvanized lag screws with one (1) washer each. Reflector sign fasteners to be 3/8"x 1½" galvanized lag screws.
4. Reflector signs - California Type N. Size 18"x 18" - Yellow with nine (9) - 3¼" reflectors (center mount).
   a. Reflectors shall be red for use on dead end streets, in all other cases they shall be yellow. Reflector material shall be plastic or other approved reflectorized material.
   b. Sign material shall be aluminum alloy 6061-T6 or 5052-H38, aluminum thickness 0.063 inches.
5. Six foot long hat section metal post per Caltrans Std. Plan A74-A optional for guard post.

LEGEND ON PLANS

Barricade Guard Post

Revision	By	Approved	Date
Cont.Barric.	[illegible]	D.S.	7-79
Post	TRP	M.B.	10-82

SAN DIEGO REGIONAL STANDARD DRAWING

GUARD POST AND BARRICADE

RECOMMENDED BY THE SAN DIEGO REGIONAL STANDARDS COMMITTEE

Allan A. Kerchand Dec. 1975
Coordinator R.C.E. 19807 Date

DRAWING NUMBER M-9

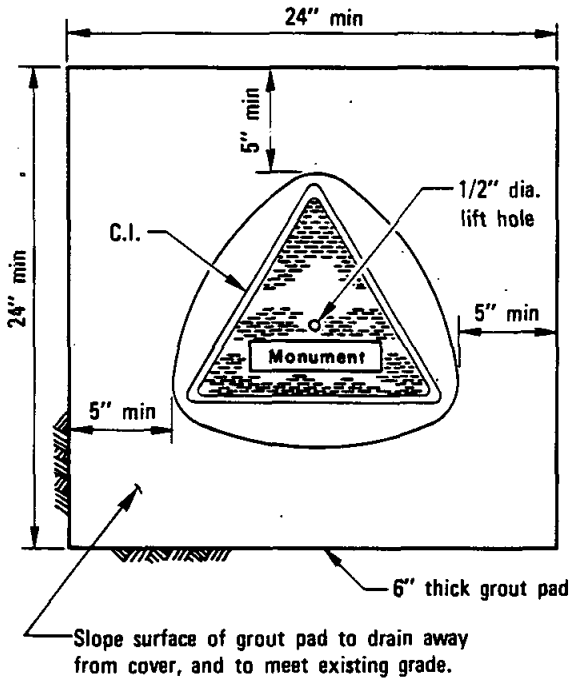

PLAN—IN UNPAVED AREA

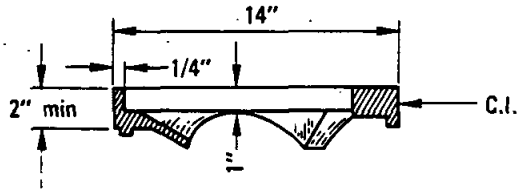

RISER RING

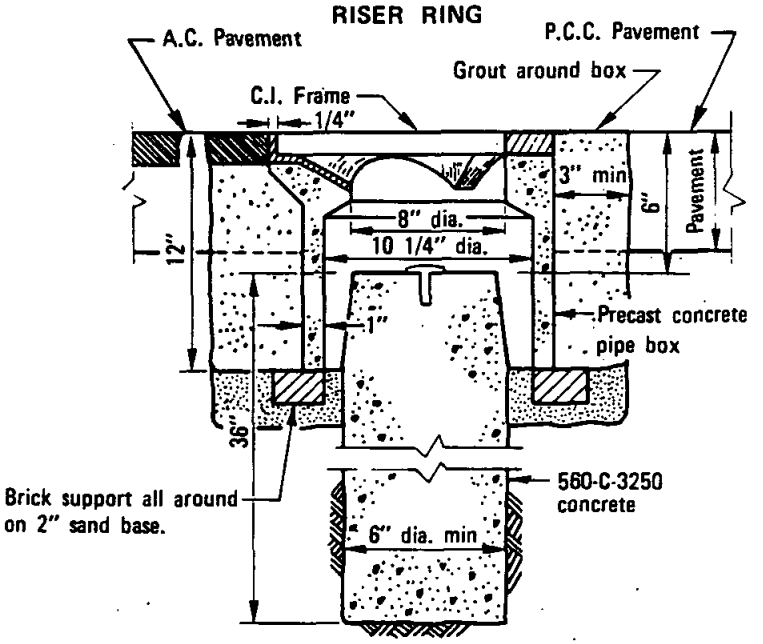

TYPICAL MONUMENT SECTION
IN PAVED AREA

NOTES

1. Cover and frame to be cast integrally with pipe box.
2. Monument base may be cast in place or precast.
3. Form and taper exposed upper 6" of cast in place base to a top diameter of 5". (Precast base shall be sand backfilled).
4. Monument marker shall be a domed brass, 3" in diameter.
5. Monument Location:
   a) Set on all centerline intersections unless actual location is modified by the Agency and shown in modified location on map. When centerline intersection is impractical, offset 5 feet on centerline of major street, (see detail at right). If neither centerline can be occupied, two monuments will be set in line around the front on the perimeter of a 10-foot diameter circle, whose center is the point.
   b) Set on centerline at intervals not exceeding 1000 feet on straight runs.
   c) Set on centerline at points of curvature.
   d) Set on center at center points of cul-de-sacs.
   e) Set on centerline when center point of cul-de-sac is offset from centerline.
   f) These standards may be modified at the discretion of the Agency in cases where strict compliance therewith results in more monuments than it considers necessary. The following technique for reducing the number of monuments will be routine.
   g) Substitution of one monument on the "Point of Intersection" for monuments at the "Beginning of Curve" and the "Ending of Curve" when the "Point of Intersection" falls within the pavement area.
   h) Deletion of any monument otherwise required by these standards when its position can be determined by turning one angle from a point on a straight line between two other monuments, providing such point is not more than 300 feet from the point on which the deleted monument would have been placed.

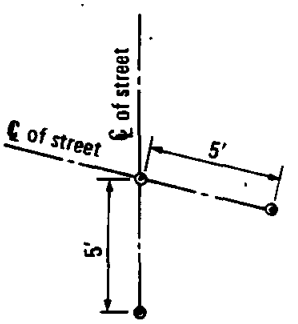

Alternate location of monument. Tie distances shown on final subdivision map if alternate location is used.

LOCATION OF STREET
SURVEY MONUMENT

RECOMMENDED BY THE SAN DIEGO REGIONAL STANDARDS COMMITTEE Allan A. Kershaw Dec. 1975 Coordinator R.C.E. 19807 Date	SAN DIEGO REGIONAL STANDARD DRAWING	Revision	By	Approved	Date
		Notes	JC	D.J.	7-79
		Section	JC	M.B.	5-86
	STREET SURVEY MONUMENT	Taper	JV	S.L.	5-92
DRAWING NUMBER M-10					

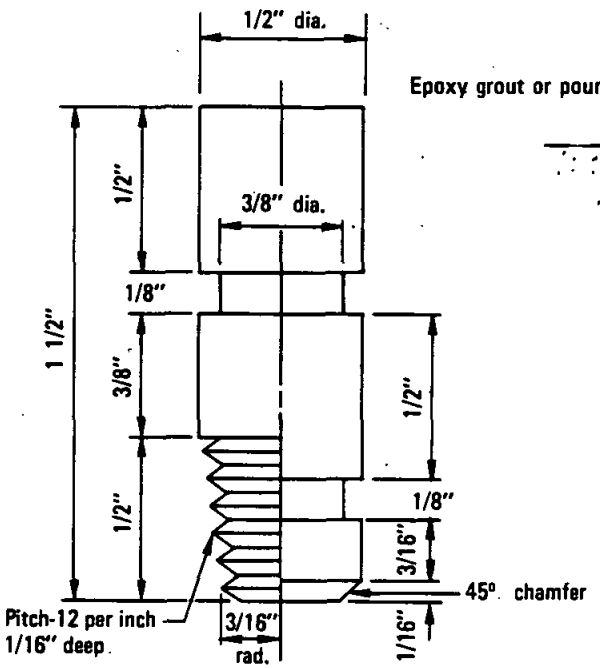

TYPE–A TYPE–B

ELEVATION

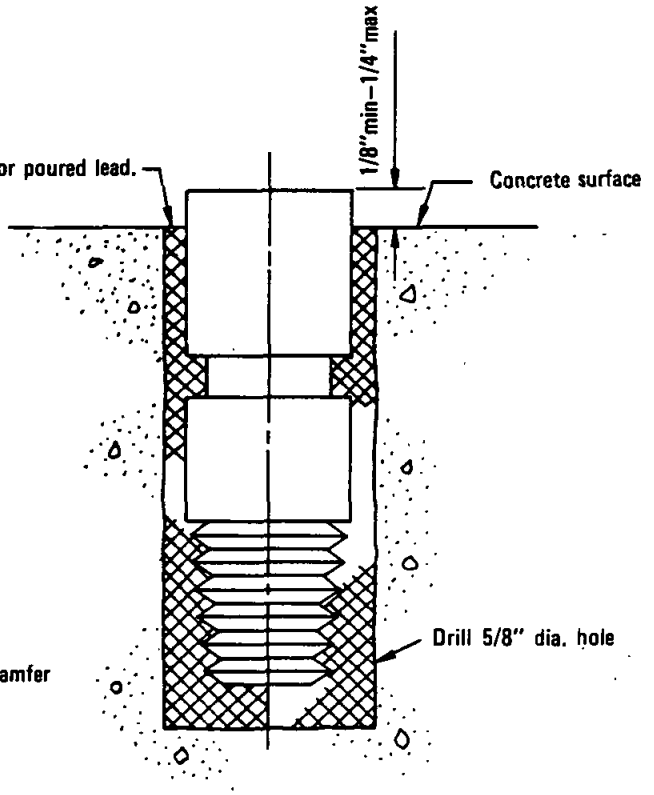

INSTALLATION IN EXISTING CONCRETE
(Typical for Type A or B)

NOTES

1. Material - Brass A.S.T.M. B-16. All machine tolerances 1/64"±, machine finish.
2. May be installed in fresh concrete at time of installation of concrete structure.
3. Location—in most stable, permanent location in vicinity, such as in base for street light standard or traffic signal (behind sidewalk), in curb (not near joint, on curve or near trees), on top of drainage headwall, in foundation for building or retaining wall or in concrete pads for transformers, pump stations etc.

Revision	By	Approved	Date

SAN DIEGO REGIONAL STANDARD DRAWING

BENCH MARK-BRASS PLUG

RECOMMENDED BY THE SAN DIEGO REGIONAL STANDARDS COMMITTEE

Allan A. Kershaw — Dec. 1975
Coordinator R.C.E. 19807 — Date

DRAWING NUMBER M-11

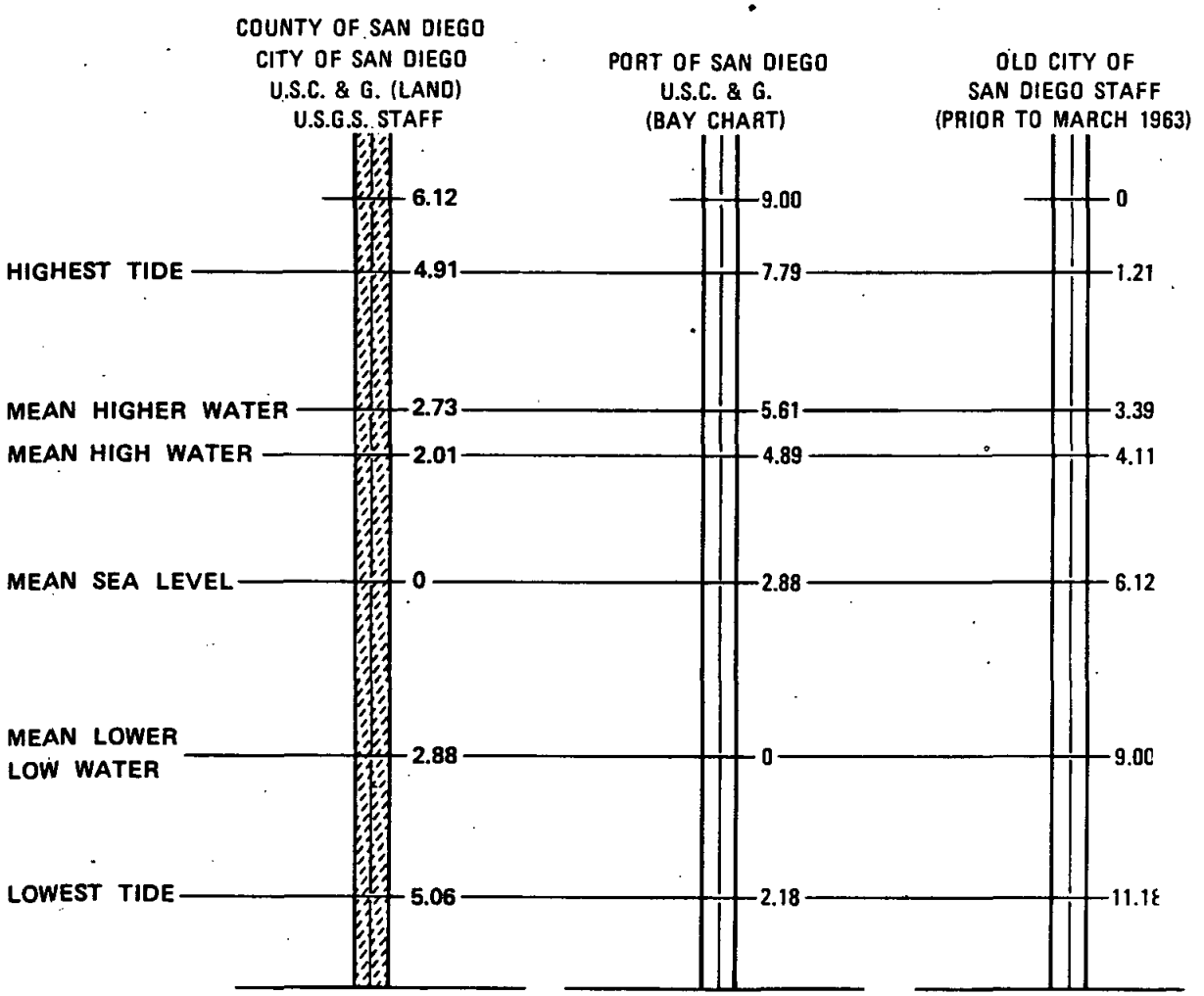

LEGEND

U.S.C. & G.	=	United States Coast and Geodetic Survey.
U.S.G.S.	=	United States Geological Survey.
MEAN HIGH WATER	=	Mean of all high water in San Diego Bay.
MEAN HIGHER WATER	=	Mean of all higher water in San Diego Bay. Bay charts and topography up to the mean high tide based on zero at the mean lower low water.

SOURCE

Data based on U.S.C. & G. "Sea Level Datum of 1929".

RECOMMENDED BY THE SAN DIEGO REGIONAL STANDARDS COMMITTEE

Coordinator R.C.E. 19807 — Dec. 1975 Date

DRAWING NUMBER **M-12**

SAN DIEGO REGIONAL STANDARD DRAWING

DATUMS

Revision	By	Approved	Date

FOUND MONUMENTS

Found monuments must denote the character of the monument, how it is identified and the record, or no record as applicable.

SET MONUMENTS - Criteria for Locating and Character

On subdivision boundaries, permanent monuments are required; and must be shown on the map at intervals as specified by the local agency. The location of such points that are inacceptable or will be destroyed by contruction may be established by ties to permanent reference monuments shown on the final map.

A permanent monument shall be no less substantial than the following:

a. An iron pipe of minimum two inch diameter not less than two feet in length placed upright in the ground so that the top of said pipe is flush with the surface. Said pipe shall be filled with a metal or cement plug at least three inches in depth and centered with a metal tack and disc; or

b. A metal plug with tack and disc set flush with the surface in portland cement conrete sidewalk, curb or pavement; or other monument satisfactory to the City Engineer or County Surveyor. The metal plug shall be anchored 1" deep in sidewalk.

Lot corners and points of curves along street and alley right of way lines where portland cement concrete sidewalks, curbs or pavement exist, or will be constructed as part of the subdivision requirements, shall be identified with tack and disc set flush with the surface along an extension of the lot line at an approved offset, to be measured radially or at right angles to the right of way line in said sidewalk, curb or pavement. In case the sideline of the lot is not radial or at right angles to the right of way line a disc shall be set along an extension of the sideline at an offset to be measured radially or at right angles to the right of way line. Where no such concrete work exists, and none will be required to be constructed, all lot corners, angle points and points of curve shall be marked with a monument no less substantial than a one-half inch steel rod or pipe, 18 inches long, set flush with the surface.

LEGEND

● Fd 2" Iron Pipe Marked RCE XXXX or per Map XXX unless otherwise noted

▲ Fd Street Survey Monument Stamped RCE XXXX or LS XXXX

◎ Set 2" x 24" Iron Pipe Marked RCE XXXX or LS XXXX

□ Set Lead and Disc Stamped RCE XXXX or LS XXXX

○ Set ½" x 18" Iron Pipe Marked RCE XXXX or LS XXXX

△ Set Street Survey Monument Stamped RCE XXXX or LS XXXX per Standard Drawing M-10

The addition of other symbols is permissible where such will result in a clearer map.

The following notes should be used in the legend where applicable.

Unless otherwise shown on this map:

1. All lot corners except as described below will be monumented by a ½ inch by 18 inch iron pin stamped (RCE or LS number).

2. Lot corners along the sideline of dedicated street right of way will be monumented by a disc stamped (RCE or LS number), set along an extension of the lot line at an offset of ___ in the (curb, sidewalk). The offset shall be measured radially, or at right angles, to the right of way line. (See example below.)

3. All points of curve of the sidelines of dedicated streets will be monumented by a disc stamped (RCE or LS number), set at an offset of ___ in the (curb, sidewalk). The offset shall be measured radially.

EXAMPLE OF OFFSET DISCS

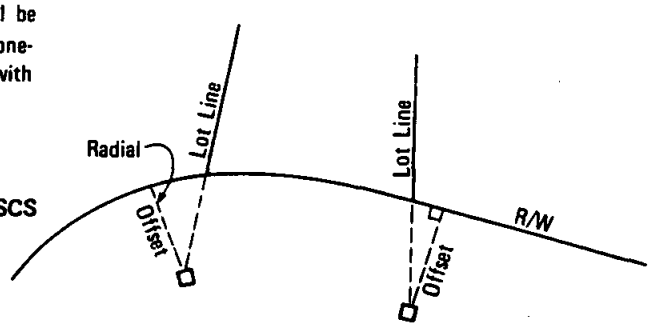

Revision	By	Approved	Date
Notes	RC	O.S.	7-79
Notes	JT	G.H.	5-92

SAN DIEGO REGIONAL STANDARD DRAWING

SURVEY MONUMENTS

RECOMMENDED BY THE SAN DIEGO REGIONAL STANDARDS COMMITTEE

Allan O. Kershaw — Dec. 1975

Coordinator R.C.E. 19807 — Date

DRAWING NUMBER **M-13**

1 Gram	= 15.4324 grains		1 Grain	=	0.0648 g.
1 Gram	= 0.0353 oz.		1 Ounce	=	28.3495 g.
1 Kg.	= 2.2046 lb.	**WEIGHT**	1 Pound	=	0.4536 kg.
1 Kg.	= 0.0011 ton		1 Ton	=	907.1848 kg.
1 Ton (met)	= 1.1023 ton		1 Ton	=	0.9072 ton (met)
1 Sq. cm.	= 0.1550 sq. in.		1 Sq. in.	=	6.4516 sq. cm.
1 Sq. m.	= 10.7639 sq. ft.		1 Sq. ft.	=	0.0929 sq. m.
1 Sq. m.	= 1.1960 sq. yd.	**AREA**	1 Sq. yd.	=	0.8361 sq. m.
1 Hectare	= 2.4710 acres		1 Acre	=	0.4047 hectare
1 Sq. km.	= 0.3861 sq. mile		1 Sq. mile	=	2.5900 sq. km.
1 Sq. km.	= 247.10 acres		1 Acre	=	0.0040 sq. km.
1 Cu. cm.	= 0.0610 cu. in.		1 Cu in.	=	16.3872 cu. cm.
1 Cu. m.	= 35.3134 cu. ft.	**VOLUME**	1 Cu ft.	=	0.0283 cu. m.
1 Cu. m.	= 1.3079 cu. yd.		1 Cu yd.	=	0.7646 cu. m.
1 Liter	= 61.0250 cu. in.		1 Cu. in.	=	0.0164 liter
1 Liter	= 0.0353 cu. ft.	**CAPACITY**	1 Cu ft.	=	28.3162 liters
1 Liter	= 0.2642 gal. (U.S.)		1 Gal.	=	3.7853 liters
1 Liter	= 0.0284 bu. (U.S.)		1 Bu.	=	35.2383 liters
1 MM.	= 0.0394 in.		1 In.	=	25.4000 mm.
1 CM.	= 0.3937 in		1 In.	=	2.5400 cm.
1 Meter	= 3.2808 ft.	**LENGTH**	1 Ft.	=	0.3048 m.
1 Meter	= 1.0936 yd.		1 Yd.	=	0.9144 m.
1 Km.	= 0.6214 mile		1 Mile	=	1.6093 km.

METRIC PREFIX

MULTIPLE	PREFIX	MULTIPLE	PREFIX
1000000	mega	1/10	deci
1000	kilo	1/100	centi
100	hecto	1/1000	milli
10	deka	1/1000000	micro

TEMPERATURE

Degrees Farenheit = 9/5 (Degrees Celcius) + 32

Degrees Centigrade = 5/9 (Degrees Fahrenheit - 32)

RECOMMENDED BY THE SAN DIEGO REGIONAL STANDARDS COMMITTEE

Allan A. Kershaw — Dec. 1975
Coordinator R.C.E. 19807 — Date

DRAWING NUMBER M-14

SAN DIEGO REGIONAL STANDARD DRAWING

METRIC EQUIVALENTS

Revision	By	Approved	Date
Equation		D.S.	7-79

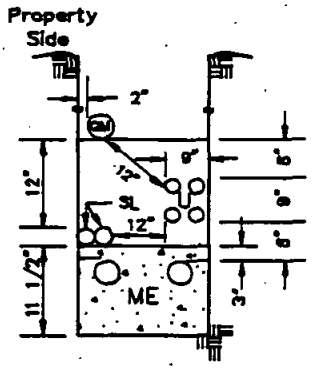

TYPE A

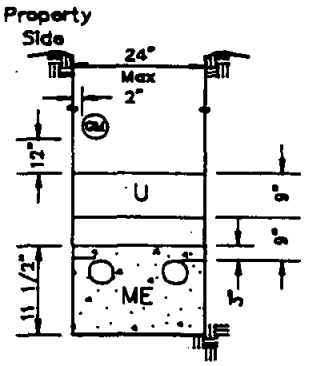

TYPE B

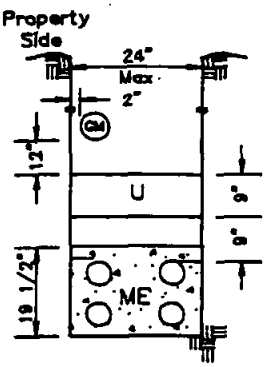

TYPE C

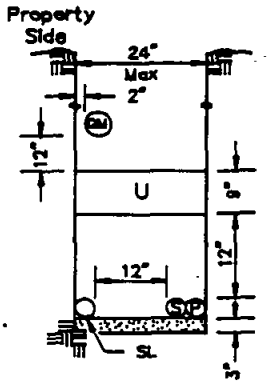

TYPE D

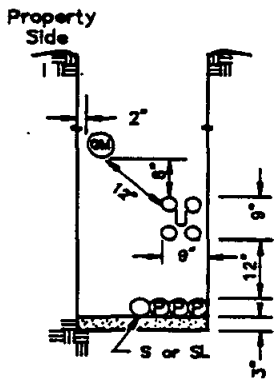

TYPE E

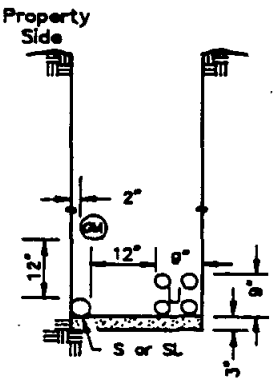

TYPE F

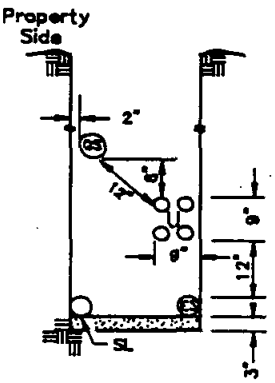

TYPE G

SERVICE TRENCH ON PUBLIC PROPERTY

	LEGEND	MIN.COVER
GM	Gas Main	30"
GS	Gas Service	30"
P	Primary Electric	42"
S	Secondary Electric	30"
ES	Electric Service	30"
ME	Multiple Electric (P, S or ES in Spacers) Concrete Encased	24"
SL	Street Light (not series)	30"
U	CATV	24"
	TELCO	24"

NOTES:

1. All dimensions are typical unless otherwise noted.
2. Generally utilities are to be installed under the applicable specifications for the particular utility and the specifications of the owner Agency.
3. The location of utilities as shown by the Standard Drawing shall in no way violate existing codes or regulations applicable to individual utilities.
4. Installation of sewer and/or water utilities are not permitted in the joint trench shown above.
5. Minimum depth of gas pipe may, subject to gas company inspectors approval, be reduced to 24" where necessary to clear structure crossings.
6. Depth and width of trench varies.
7. CATV main or trunk line conduit required along all streets, except cul-de-sac streets less than 1000' in length which may be served by feeder lines only.
8. CATV 1 1/2" feeder conduit shall run across streets with each power service line and capped at edge of sidewalk.
9. All CATV terminals and conduits shall be terminated at generally accepted locations and marked. A map shall be filed with the appropriate agency showing the locations of the CATV system.
10. In no case shall CATV conduits be placed within 12" of gas lines. Also conduits are not to be placed directly over gas lines.
11. CATV conduit may be placed with the TELCO conduit provided the TELCO minimum depth is held.

Revision	By	Approved	Date
New Dwg	JC	A.H.	10/88

SAN DIEGO REGIONAL STANDARD DRAWING

JOINT TRENCH UTILITIES LOCATION

RECOMMENDED BY THE SAN DIEGO REGIONAL STANDARDS COMMITTEE

Chairman — Date: SEPT. 1988

DRAWING NUMBER M-15

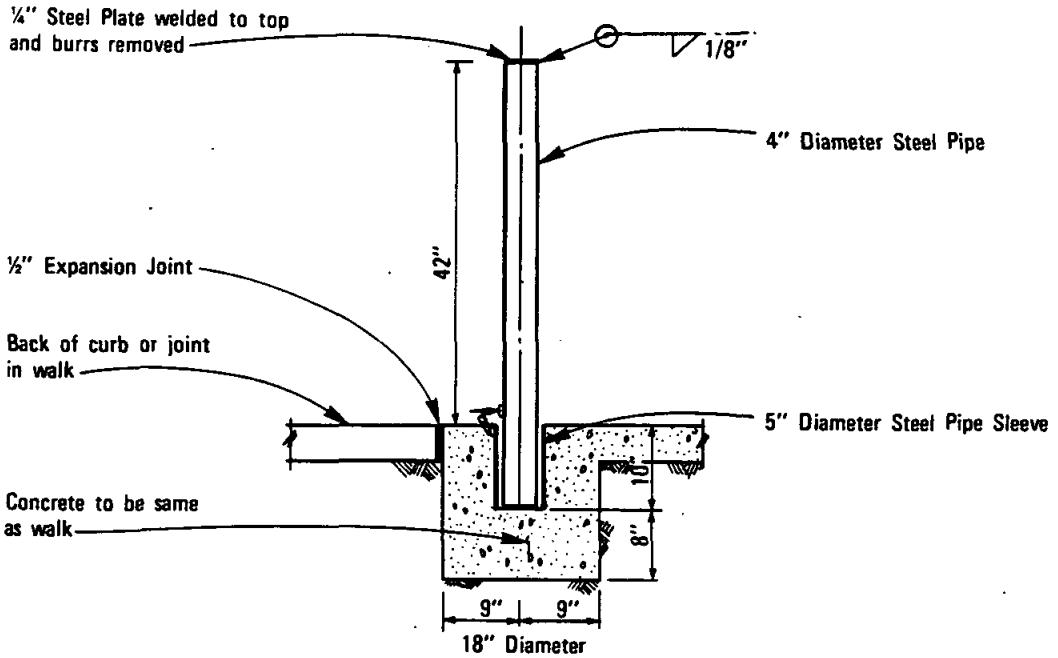

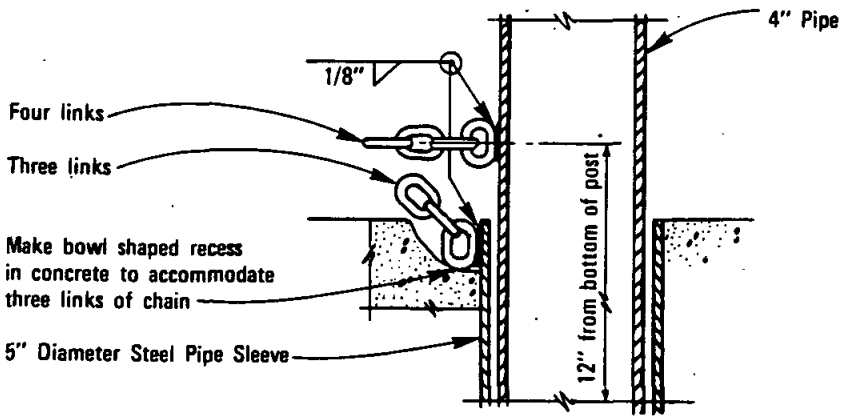

HASP DETAIL
(Showing Welds)

NOTES

1. Chain to be ¼" proof coil chain galvanized steel. Weld four links to post and three links to pipe sleeve.
2. All metal to be hot-dip galvanized after fabrication.

LEGEND ON PLANS

O

RECOMMENDED BY THE SAN DIEGO REGIONAL STANDARDS COMMITTEE Coordinator R.C.E. 25291 Date July 6 1979	SAN DIEGO REGIONAL STANDARD DRAWING	Revision	By	Approved	Date
	DEMOUNTABLE POST				
DRAWING NUMBER M-16					

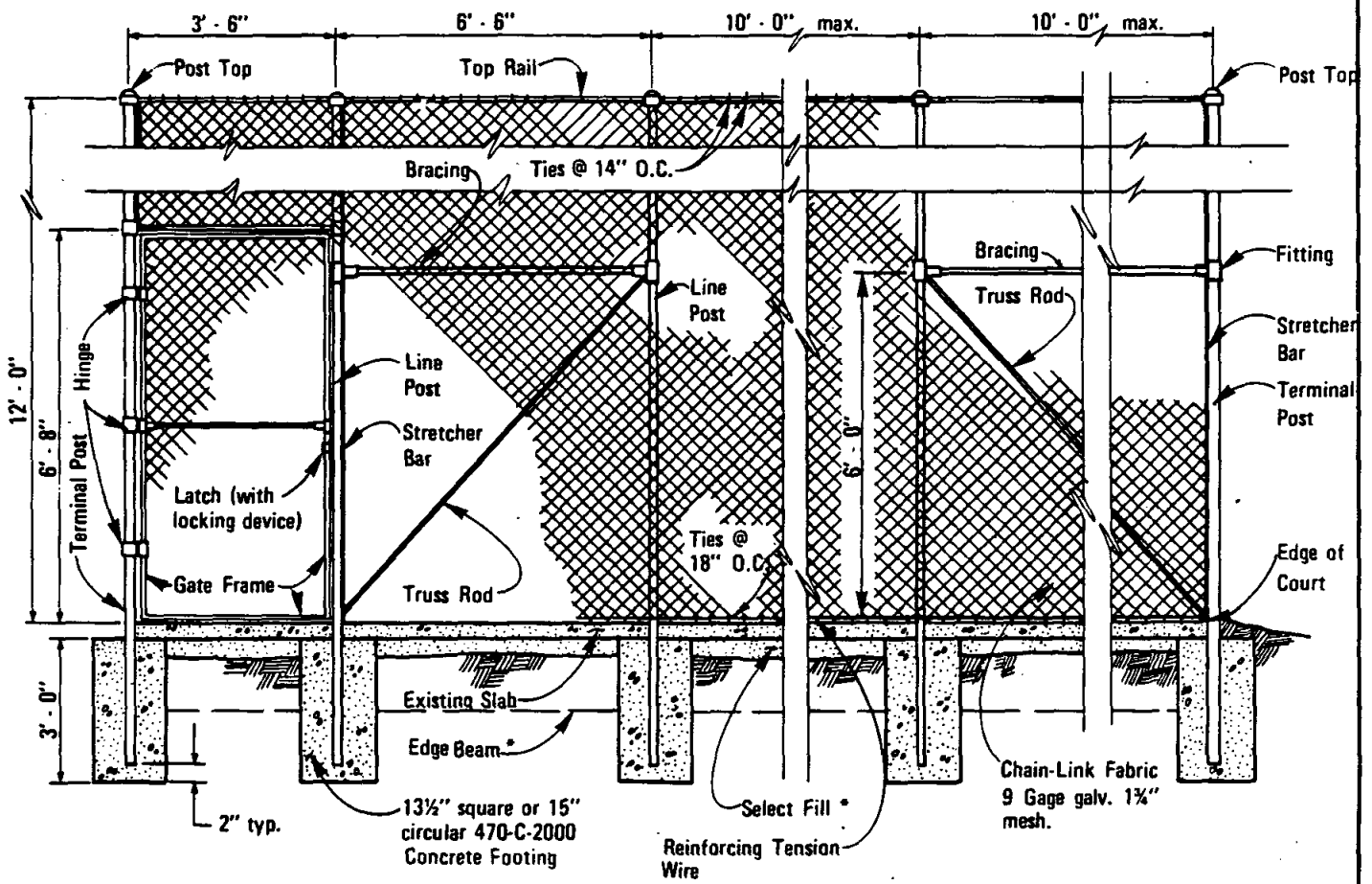

*For Edge Beam, Slab, and Select Fill details, see plans.

ELEVATION

DESCRIPTION	MIN. SIZE IN INCHES	MIN. WEIGHT PER LIN FT IN LBS
Line Post	2.375 O.D.	3.65
Terminal Post	2.875 O.D.	5.79
Top Rail	1.660 O.D.	2.27
Bracing	1.660 O.D.	2.27
Gate Frame	1.660 O.D.	2.27

NOTE:
Chain link fabric shall be erected on the interior side of the courts.

CAUTION:
This Standard Drawing is not to be used if any wind screen is to be applied to the fence.

Revision		Approved	Date
Fabric		M.B.	5-86
Caution		A.H.	7-88

SAN DIEGO REGIONAL STANDARD DRAWING

TENNIS COURT FENCE CHAIN-LINK

RECOMMENDED BY THE SAN DIEGO REGIONAL STANDARDS COMMITTEE

Coordinator R.C.E. 25291 Date

DRAWING NUMBER M-17

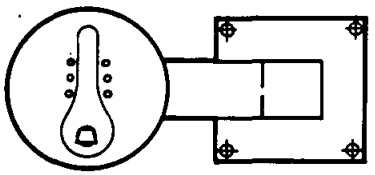

1. Drinking Fountain - Haws model 3376 or approved equal.
2. 3/8" dia. expansion anchors with flat (recessed heads) screws 4 places.
3. 1¼" P.V.C. pipe with sweep 90° ell connection to fountain drain.
4. 9½" x 16" concrete yard box with hinged locking top (Brooks No. 3HL or equal) set on red brick foundation.
5. 4" x 40 lin. ft. perforated underdrain pipe, encased in crushed rock (3/4" size). Pipe to be A.D.S. or equal.
6. 1" gate valve with red brass cross handle and union. Install as per Std. Dwg. I-12
7. 2" dia. galv. pipe sleeve with red brass lock cap per Std. Dwg. I-12
8. Rigid copper pipe from gate valve to fountain assembly connection.
9. Concrete pavement.

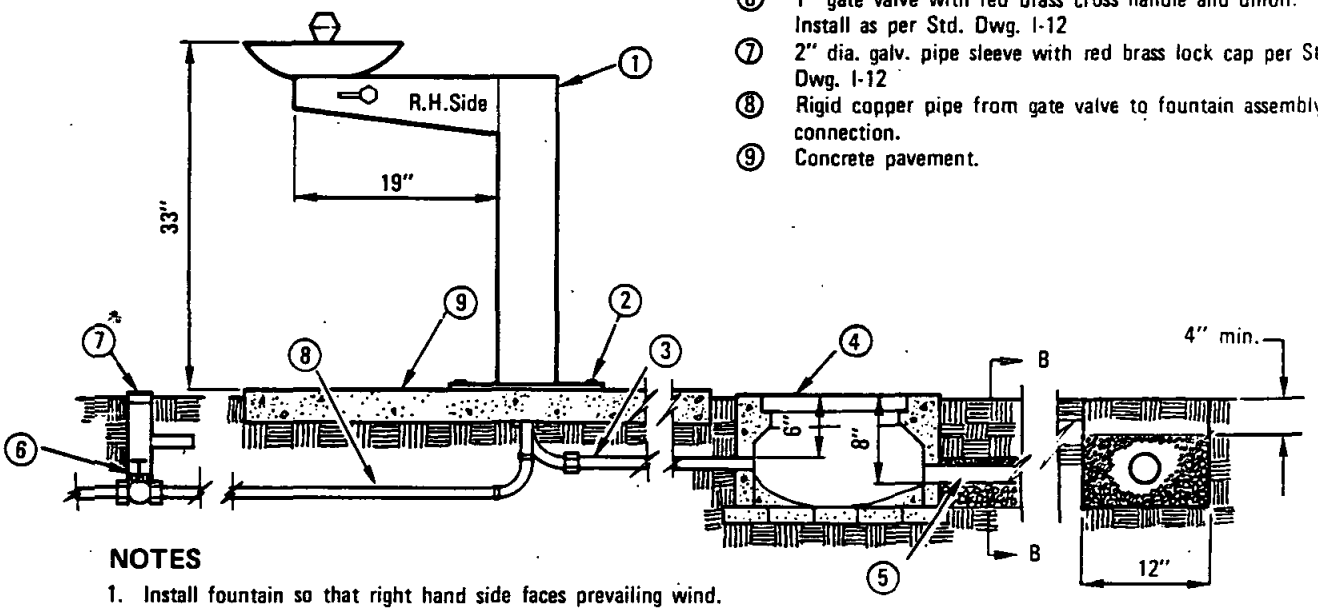

SECT B–B

NOTES

1. Install fountain so that right hand side faces prevailing wind.
2. Hand form a concrete bowl at bottom of yard box to facilitate sand clean out.
3. Perforated drain pipe and trench are to drain away from fountain at 1% min. slope. Keep drain in lawn areas.
4. Item no. 6 is a one inch gate valve. Use red brass bushing reducers to adapt to feed pipe.

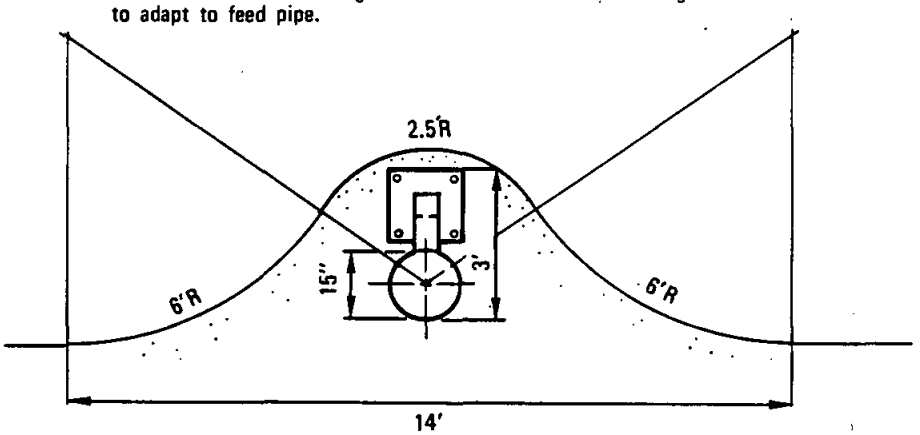

TYPICAL PLAN

LEGEND ON PLANS

RECOMMENDED BY THE SAN DIEGO REGIONAL STANDARDS COMMITTEE Harry R. Holt Oct 1982 Chairman R.C.E. C13768 Date	SAN DIEGO REGIONAL STANDARD DRAWING	Revision	By	Approved	Date
DRAWING NUMBER M-18	DRINKING FOUNTAIN				

STREET LOCATIONS

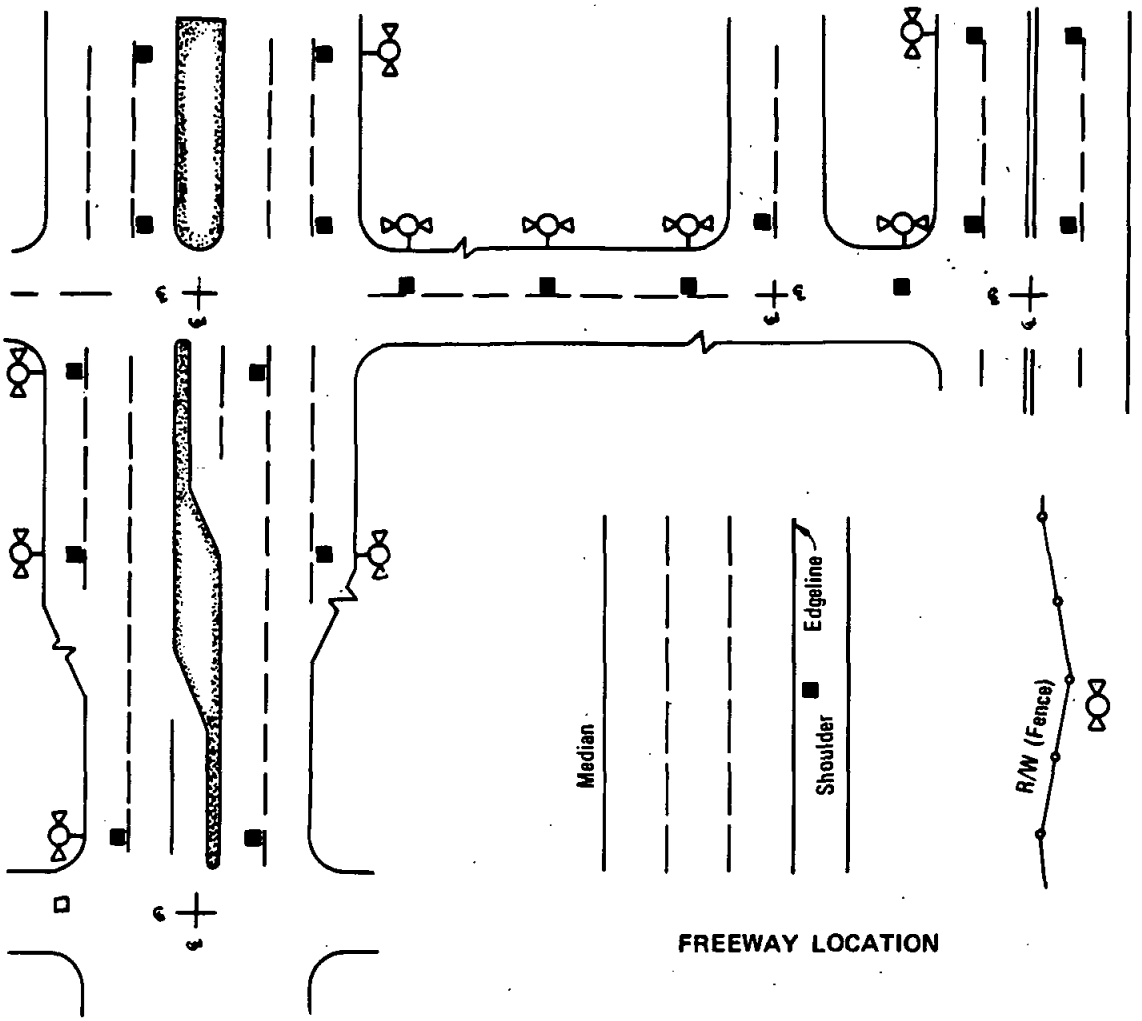

FREEWAY LOCATION

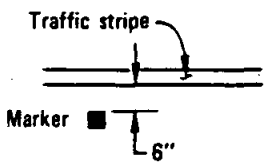

DETAIL

MARKERS – Shall be blue 2-way stimsonite lifelite 88AB or equal.

ADHESIVE – An ample amount of two part (A&B) epoxy or equal.

SURFACES – Clean and dry prior to installation per manufacturer's recommendations. Install markers with reflective surfaces facing oncoming vehicles and offset 2" from lane lines toward fire hydrant.

NOTES:

1. Fire Department will provide location(s) for all markers in PRD's, Commercial Lots and other areas outside of Public Right of Way.
2. Markers must be installed at all new and relocated hydrants and within all resurfacing projects.
3. For streets without lane lines or streets with raised pavement markers and no painted lane lines, install markers 6" from centerline or existing markers.

LEGEND ON PLANS

Marker ■

Fire Hydrant

Revision		Approved	Date
Frwy loc.	2	M.B.	5-86

SAN DIEGO REGIONAL STANDARD DRAWING

FIRE HYDRANT MARKERS

RECOMMENDED BY THE SAN DIEGO REGIONAL STANDARDS COMMITTEE

Chairman R.C.E. C13768 Date Oct 1982

DRAWING NUMBER M-19

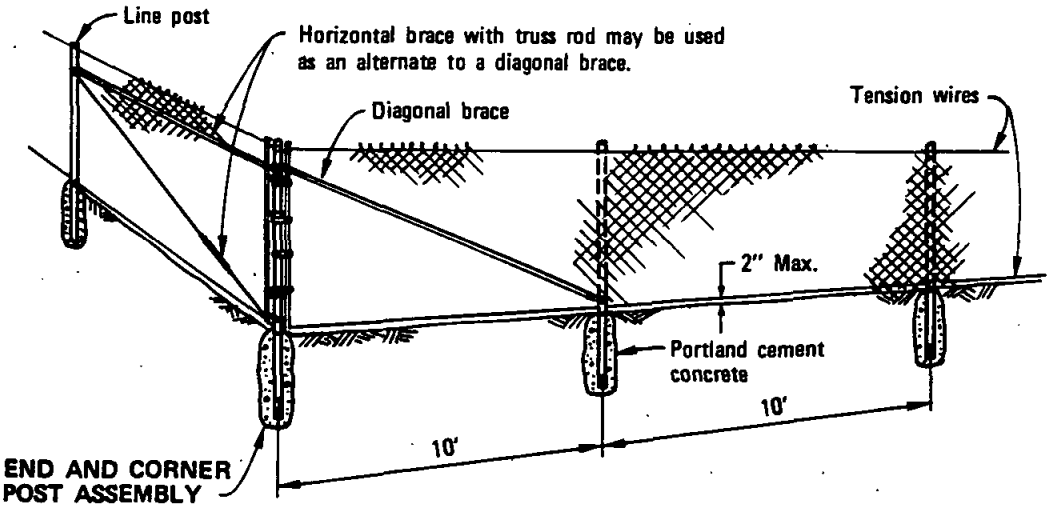

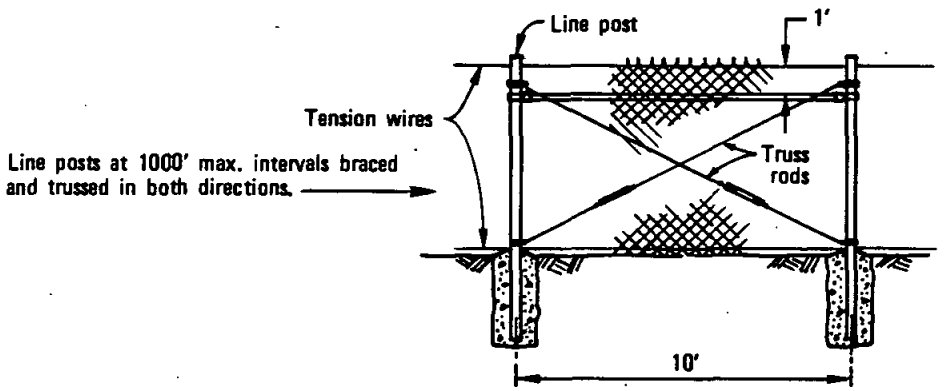

LINE POST BRACING

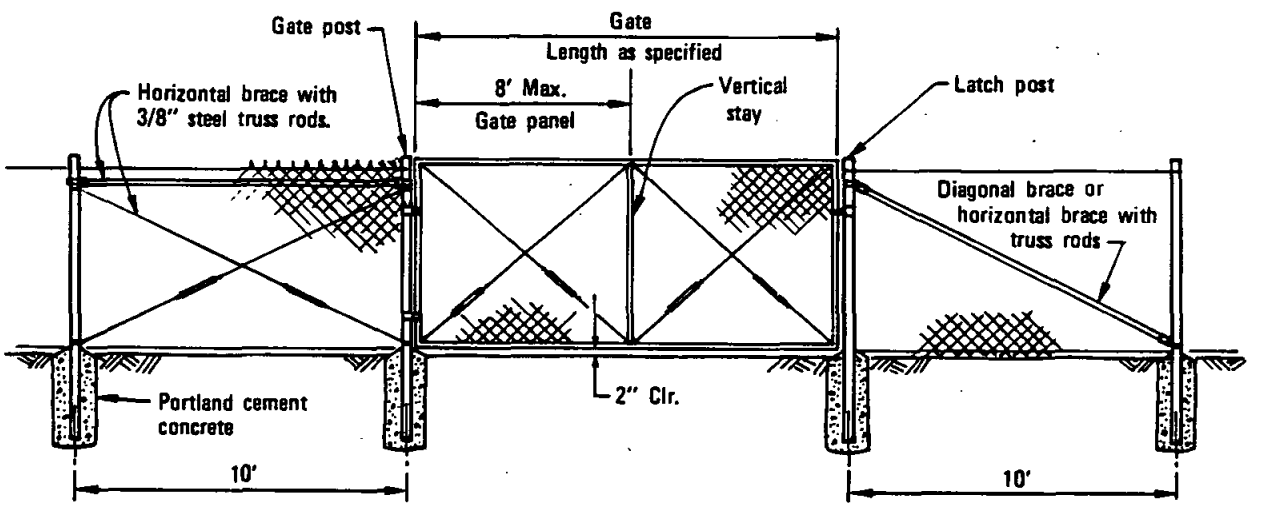

GATE ASSEMBLY

RECOMMENDED BY THE SAN DIEGO REGIONAL STANDARDS COMMITTEE M. Bahmani 4-25-86 Coordinator R.C.E. C21133 Date	SAN DIEGO REGIONAL STANDARD DRAWING	Revision	By	Approved	Date
DRAWING NUMBER M-20	CHAIN LINK FENCE DETAILS				

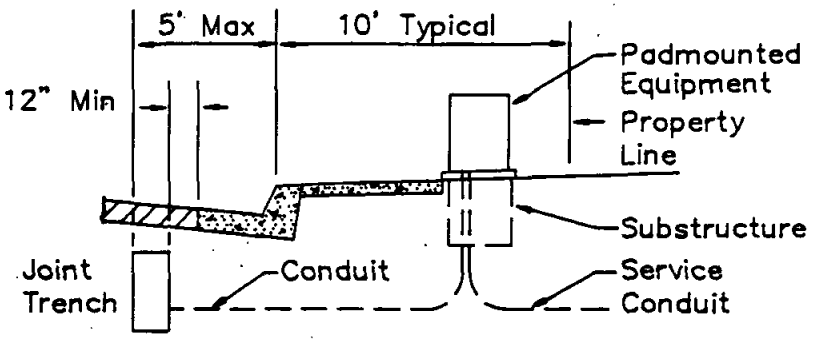

SIDEWALK NEXT TO CURB

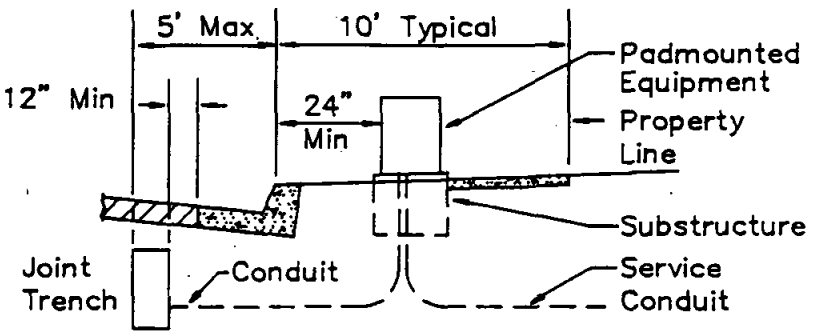

SIDEWALK NEXT TO PROPERTY LINE

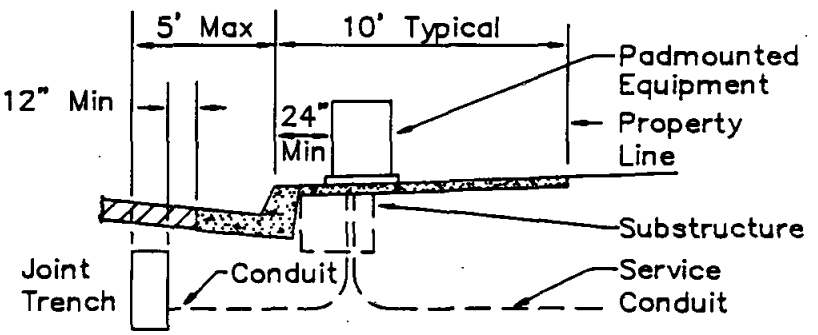

SIDEWALK NEXT TO CURB AND PROPERTY LINE

NOTES:

1. Sidewalk shall have a minimum of four (4) foot clear area (path, not including curb) passing pedestals, pullboxes and other structures.
2. See Standard Drawing M–15 for joint trench.

Revision	By	Approved	Date

SAN DIEGO REGIONAL STANDARD DRAWING

UNDERGROUND TYPICAL LOCATION CONVERSION/REPLACEMENT/UPGRADE

RECOMMENDED BY THE SAN DIEGO REGIONAL STANDARDS COMMITTEE

Chairman — Date: SEPT. 1988

DRAWING NUMBER **M-21**

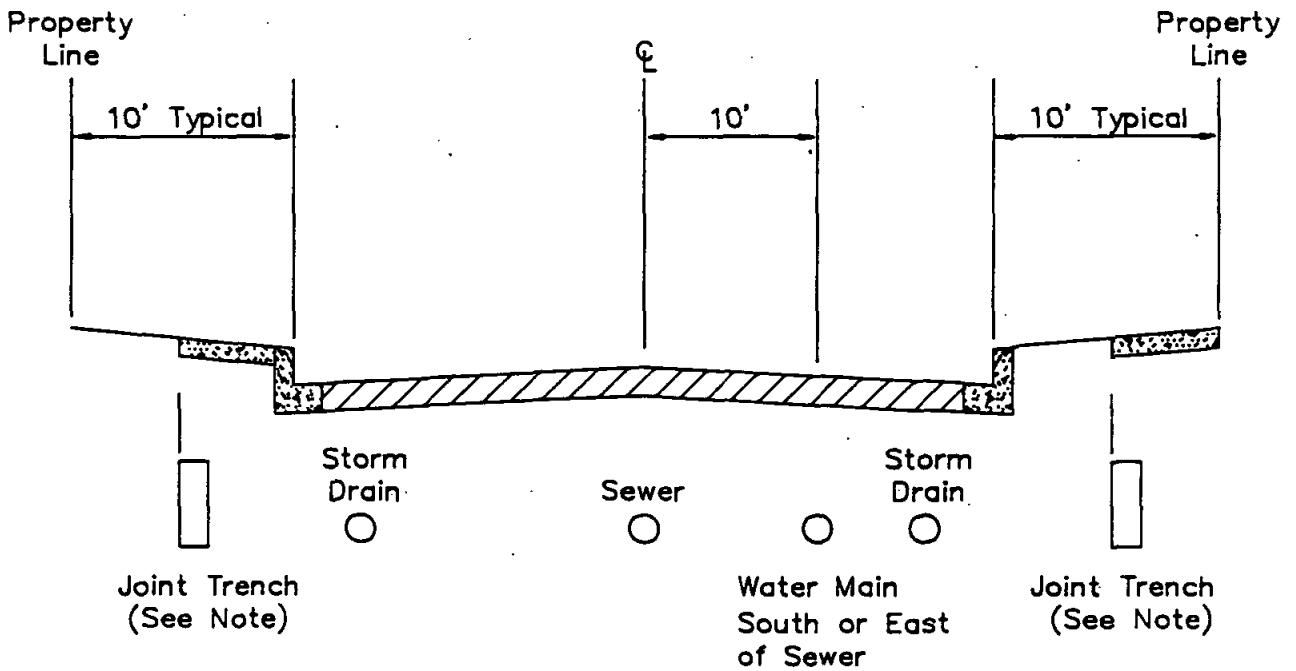

TYPICAL STREET
NEW CONSTRUCTION

NOTE:
At catch basin locations, joint trench shall be 4 feet minimum from back of curb to inside wall of trench.

RECOMMENDED BY THE SAN DIEGO REGIONAL STANDARDS COMMITTEE Chairman — Date SEPT. 1988	SAN DIEGO REGIONAL STANDARD DRAWING	Revision	By	Approved	Date
	UTILITY LOCATIONS IN LOCAL AND COLLECTOR STREETS				
DRAWING NUMBER M-22					

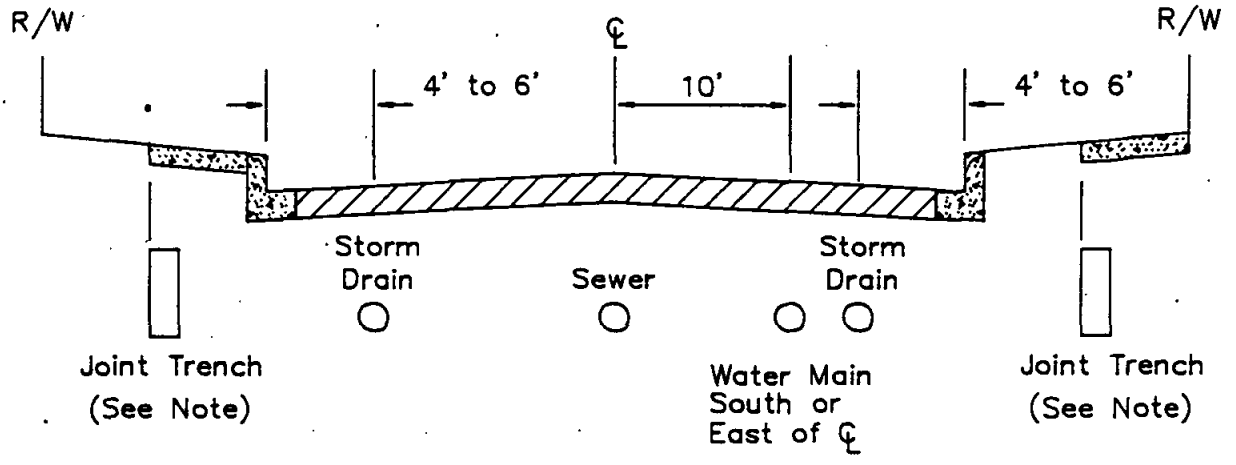

MAJOR STREET

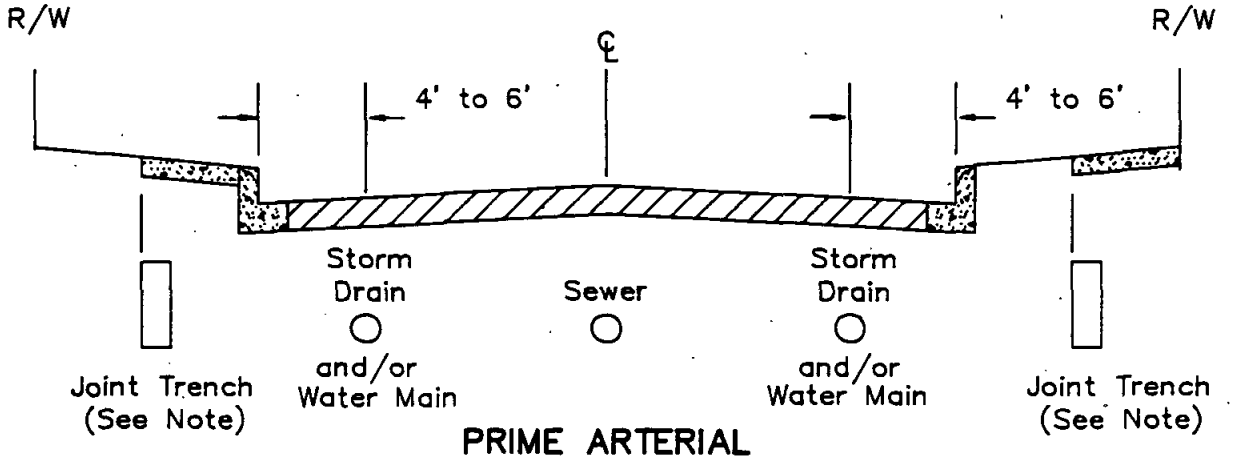

PRIME ARTERIAL

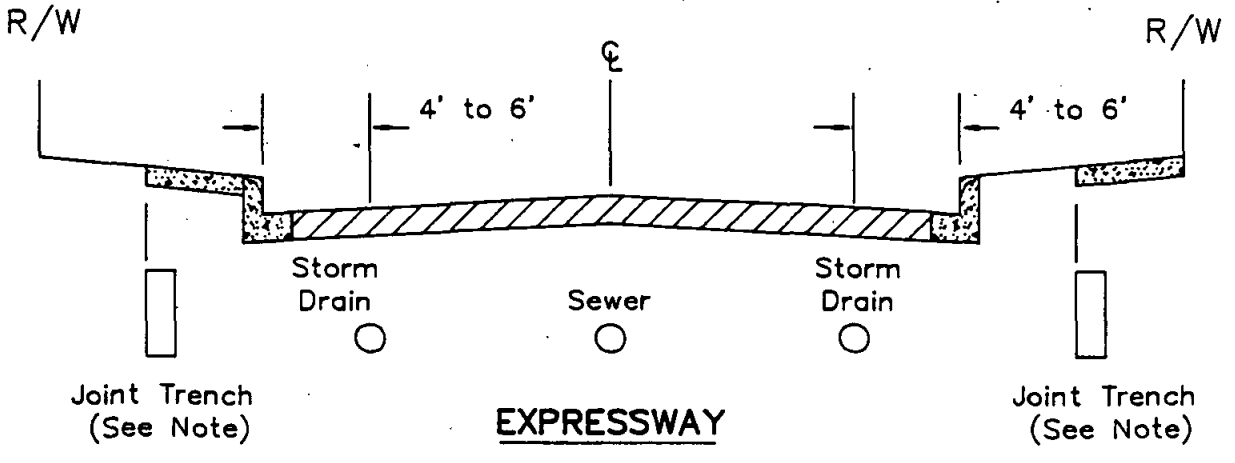

EXPRESSWAY

NOTE:
At catch basin locations, joint trench shall be 4 feet minimum from back of curb to inside wall of trench.

Revision	By	Approved	Date

SAN DIEGO REGIONAL STANDARD DRAWING

UTILITY LOCATIONS IN MAJOR STREETS, PRIME ARTERIALS AND EXPRESSWAYS

RECOMMENDED BY THE SAN DIEGO REGIONAL STANDARDS COMMITTEE

Chairman — Date: SEPT. 1988

DRAWING NUMBER **M-23**

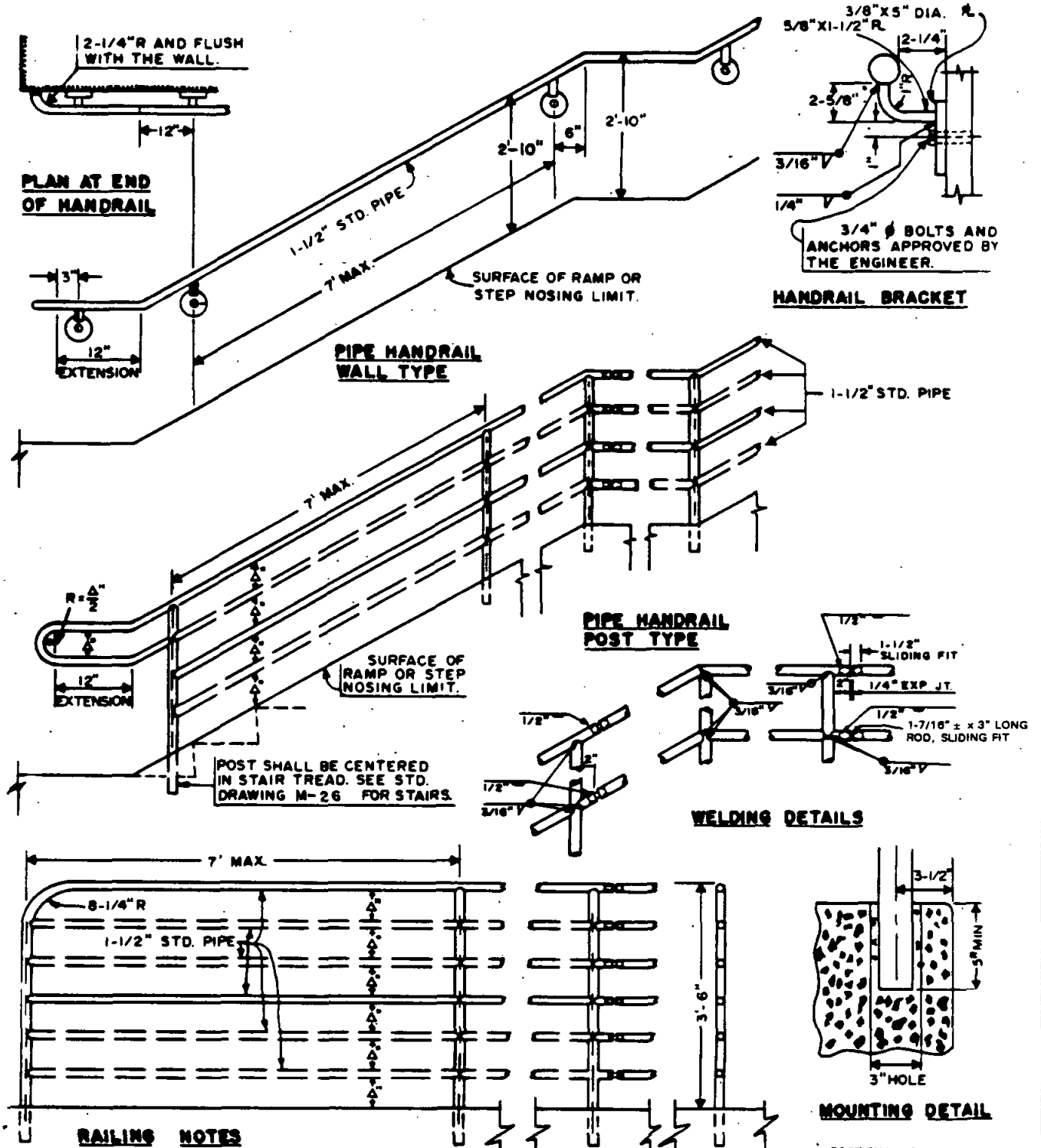

RAILING NOTES

1. 1/4" EXPANSION JTS. AT 16'± CTRS.
2. WELD AND GRIND SMOOTH ALL CONNECTIONS.
3. ALL RAILING TO BE HOT DIPPED GALVANIZED AFTER FABRICATION.
4. PIPE TO BE SEAMLESS STEEL ASTM A53 GRADE B.
5. MAXIMUM Δ = 8 INCHES.

RECOMMENDED BY THE SAN DIEGO REGIONAL STANDARDS COMMITTEE

5-11-92

Chairman RCE 25902 Date

DRAWING NUMBER M-24

SAN DIEGO REGIONAL STANDARD DRAWING

PEDESTRIAN PROTECTIVE RAILINGS DETAIL NO. 1

Revision	By	Approved	Date
Rail Ht.	JP	S.A.	5-92

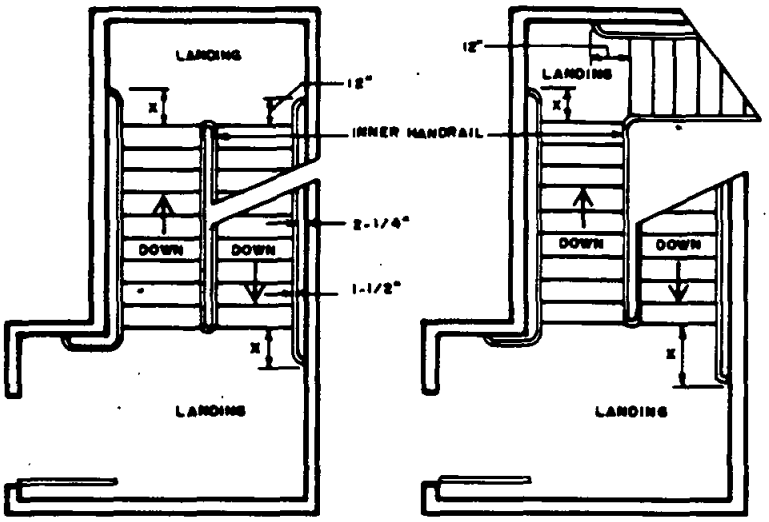

X: EXTENSION OF HANDRAIL SHALL BE EQUAL TO THE TREAD WIDTH PLUS 12 INCHES.

NOTE: INNER HANDRAIL AT LANDINGS OF STAIRS THAT DOUBLE BACK OR IMMEDIATELY TURN SHALL BE CONTINUOUS AND SHALL NOT EXTEND INTO LANDING OR PATH OF TRAVEL.

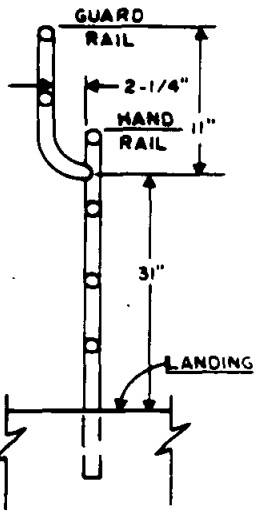

TYPE A
GUARDRAIL EXTENSION

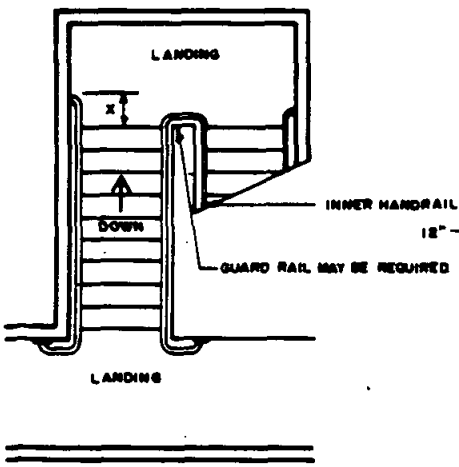

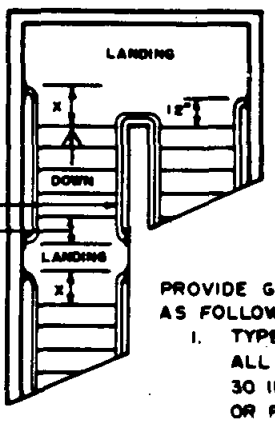

STAIR HANDRAILS

PROVIDE GUARDRAIL EXTENSIONS AS FOLLOWS:

1. TYPE A ON OPEN SIDE OF ALL LANDINGS MORE THAN 30 INCHES ABOVE GRADE OR FLOOR BELOW.
2. TYPE B ON OPEN SIDE OF STAIRS (INCLUDING LANDINGS) WHEN SPECIFIED.

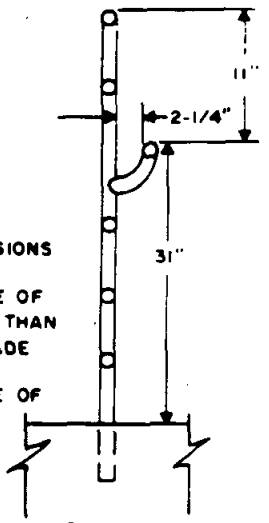

TYPE B
GUARDRAIL EXTENSION

GENERAL NOTES:

1. POST TYPE GUARDRAILS, AND HANDRAILS FOR STAIRS OR LANDINGS 30 INCHES OR LESS ABOVE GRADE OR FLOOR BELOW SHALL HAVE ONLY ONE INTERMEDIATE RAIL CENTERED BETWEEN THE STEP NOSING LIMIT (OR IF SPECIFIED THE TOP OF CURB) AND TOP OF RAILING.
2. POST TYPE GUARDRAILS, AND HANDRAILS FOR STAIRS OR LANDINGS MORE THAN 30 INCHES ABOVE GRADE OR FLOOR BELOW SHALL HAVE INTERMEDIATE RAILS EQUALLY SPACED SUCH THAT A SPHERE 6 INCHES IN DIAMETER CANNOT PASS THROUGH.
3. WHERE HANDRAIL EXTENSIONS INTERFERE WITH TRANSVERSE WALKWAYS THE HORIZONTAL PORTIONS SHALL NOT ENCROACH BUT BE TURNED AWAY FROM STAIRS AND PARALLEL TO WALKWAY.

Revision	By	Approved	Date

SAN DIEGO REGIONAL STANDARD DRAWING

PEDESTRIAN PROTECTIVE RAILINGS DETAIL NO. 2

RECOMMENDED BY THE SAN DIEGO REGIONAL STANDARDS COMMITTEE

Chairman — Date: SEPT. 1988

DRAWING NUMBER **M-25**

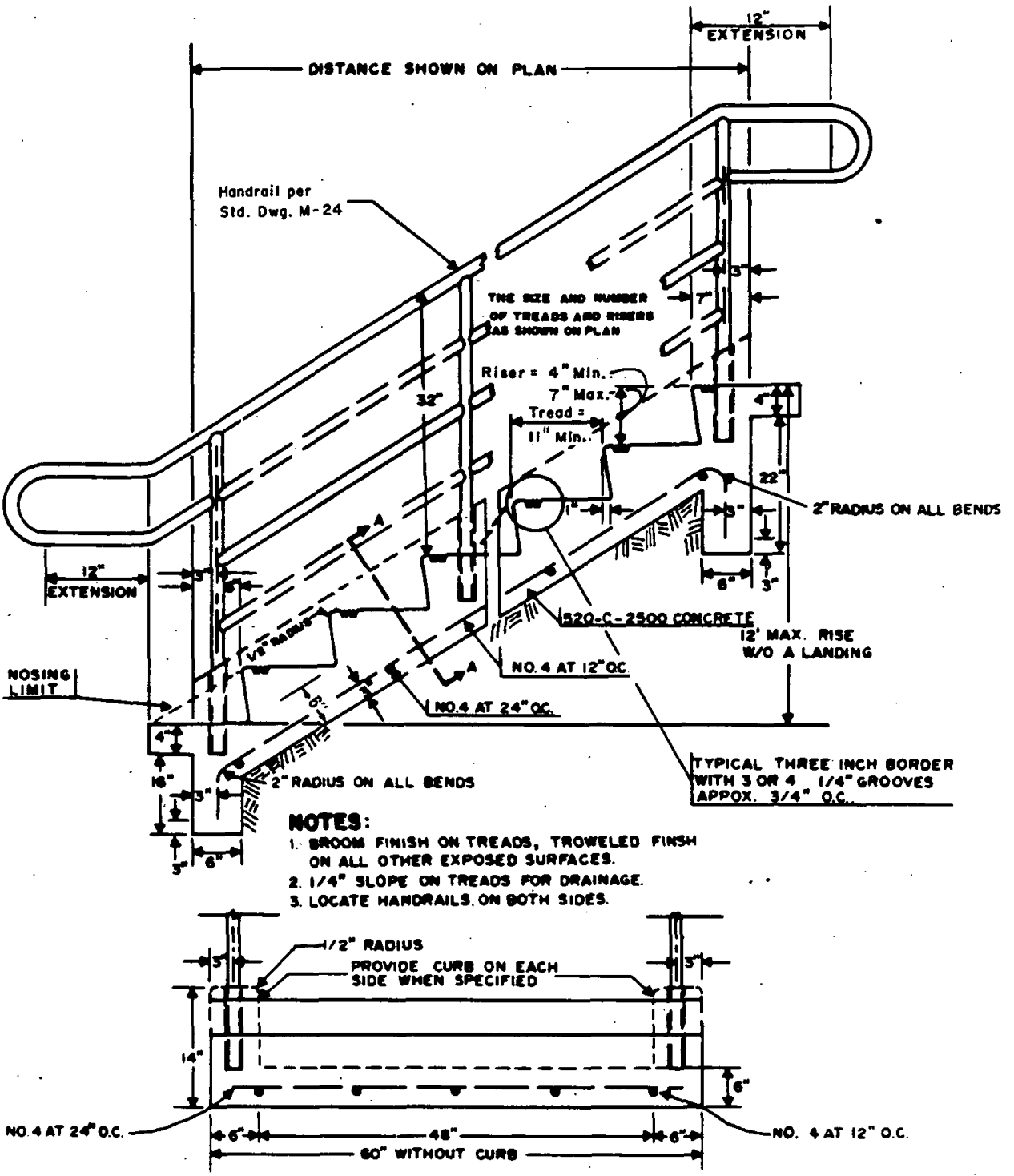

NOTES:

1. BROOM FINISH ON TREADS, TROWELED FINSH ON ALL OTHER EXPOSED SURFACES.
2. 1/4" SLOPE ON TREADS FOR DRAINAGE.
3. LOCATE HANDRAILS ON BOTH SIDES.

SECTION A-A

RECOMMENDED BY THE SAN DIEGO REGIONAL STANDARDS COMMITTEE Chairman — Date SEPT. 1980	SAN DIEGO REGIONAL STANDARD DRAWING	Revision	By	Approved	Date
DRAWING NUMBER M-26	CONCRETE STEPS				

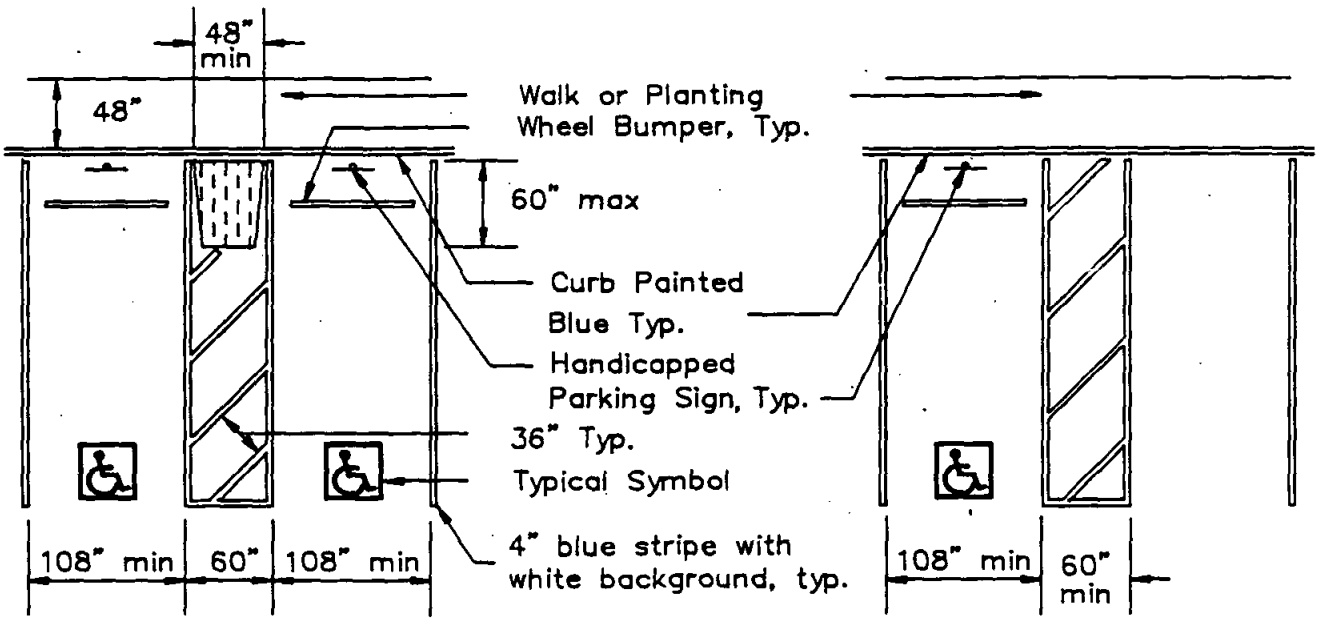

DOUBLE TYPE

SINGLE TYPE

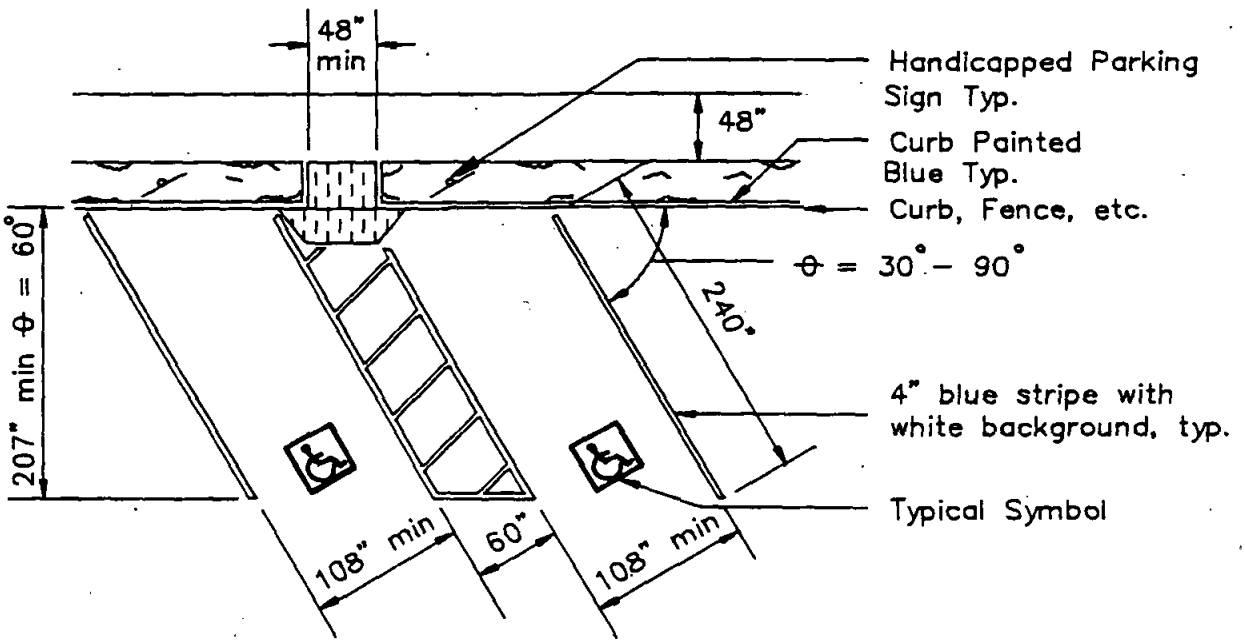

DOUBLE DIAGONAL TYPE

Revision	By	Approved	Date

SAN DIEGO REGIONAL STANDARD DRAWING

HANDICAPPED PARKING SPACES

RECOMMENDED BY THE SAN DIEGO REGIONAL STANDARDS COMMITTEE

Chairman — Date SEPT. 1988

DRAWING NUMBER M-27

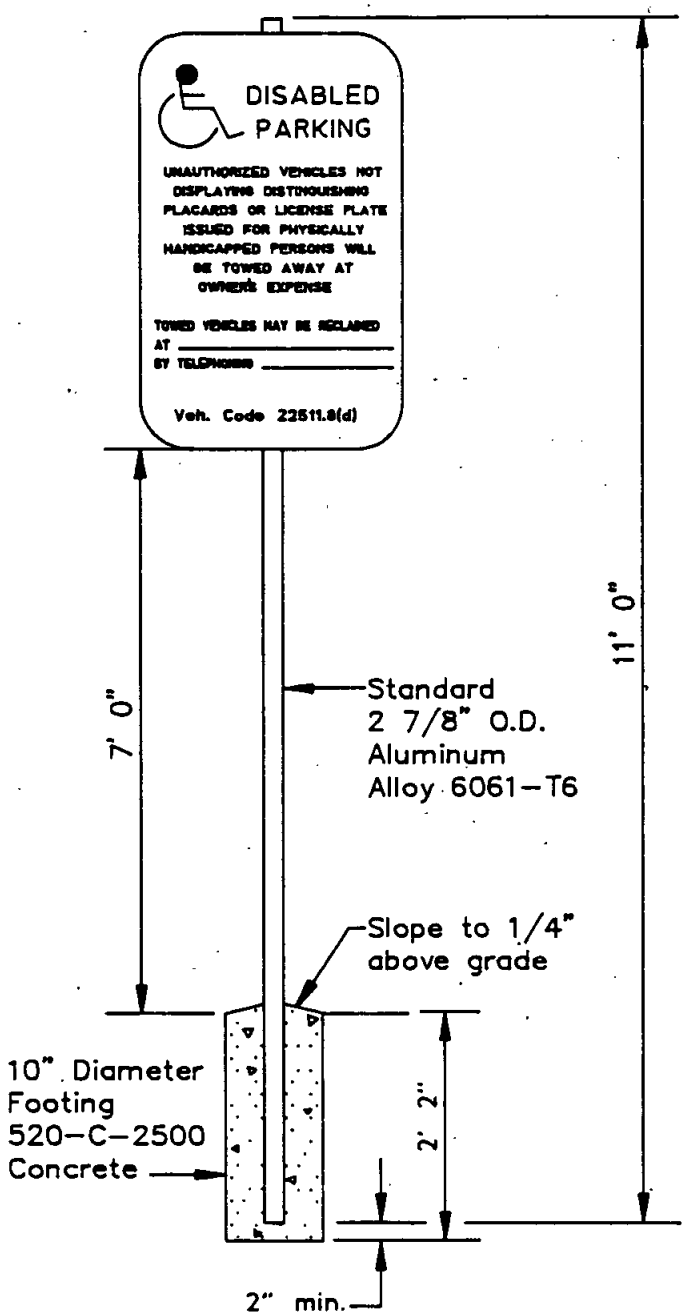

Sign Detail

NOTES

1. Sign shall be 18"x 24" and constructed of 0.8" aluminum.
2. Lettering, symbol and border shall be reflectorized white, on a blue background.
3. Lettering shall be 1 inch and 2 inches high.
4. Attach sign with two piece SC–7 diecast aluminum sign clamps.

RECOMMENDED BY THE SAN DIEGO REGIONAL STANDARDS COMMITTEE Chairman — Date SEPT. 1988	SAN DIEGO REGIONAL STANDARD DRAWING	Revision	By	Approved	Date
	DISABLED PARKING SIGN				
DRAWING NUMBER M-28					

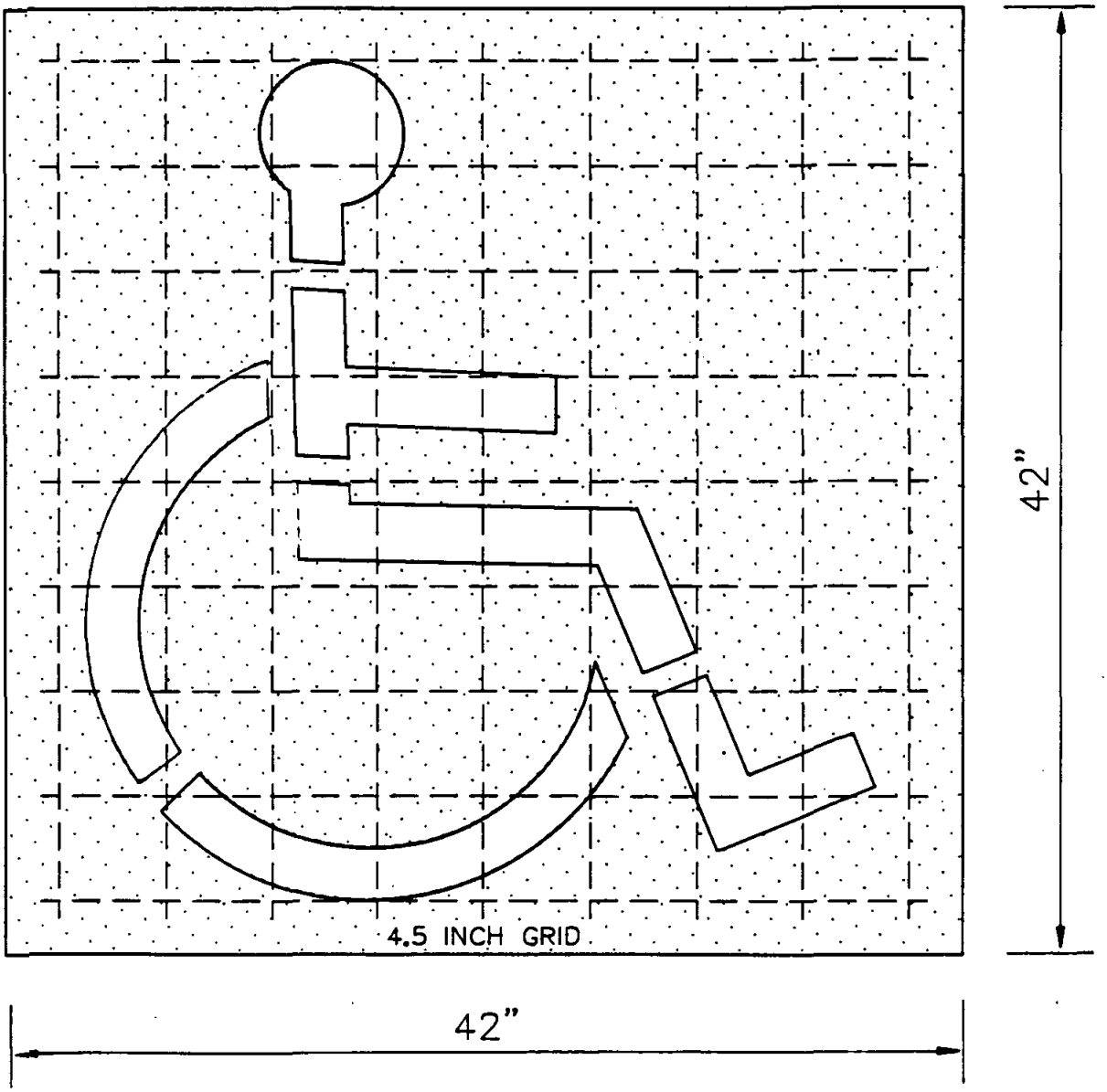

NOTE:
Pavement symbol shall be painted white on a blue background.

Revision	By	Approved	Date

SAN DIEGO REGIONAL STANDARD DRAWING

PAVEMENT SYMBOL
DISABLED PARKING

RECOMMENDED BY THE SAN DIEGO REGIONAL STANDARDS COMMITTEE

Chairman — Date: SEPT. 1988

DRAWING NUMBER **M-29**

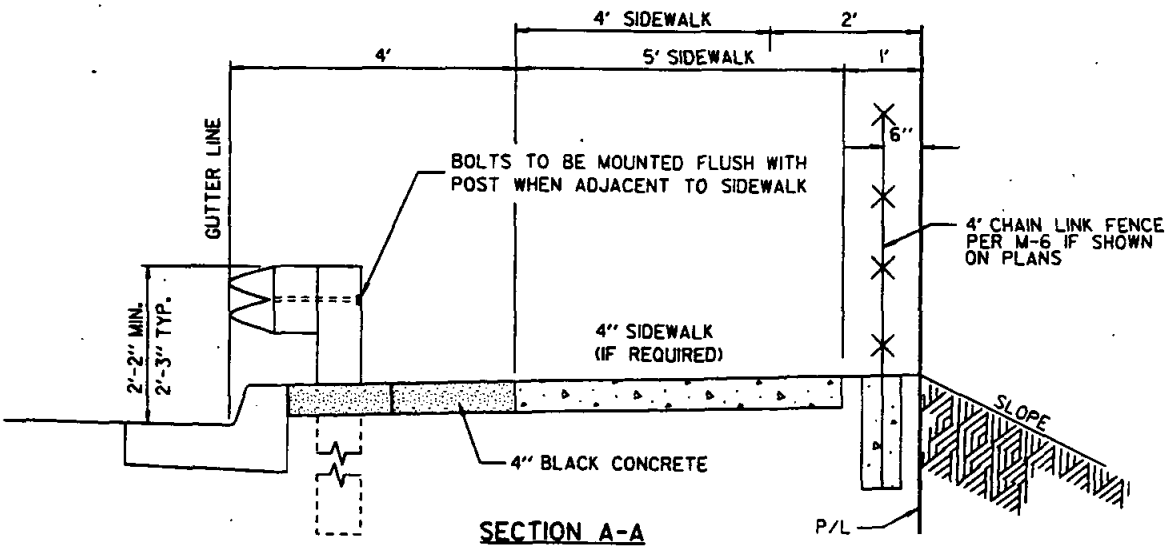

SECTION A-A

TYPICAL FOR ABOVE GROUND OBSTRUCTIONS-4:1 SIDEWALK TRANSITIONS TYPICAL FOR USE WITH G-7

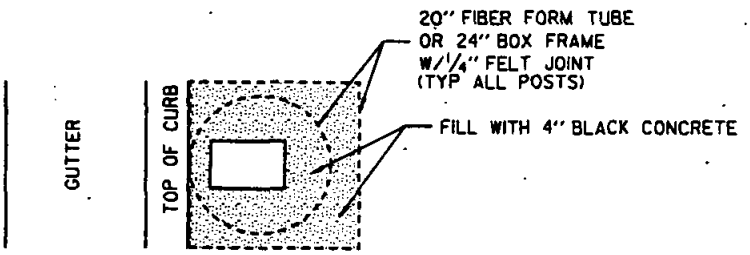

DETAIL OF POST KNOCKOUT

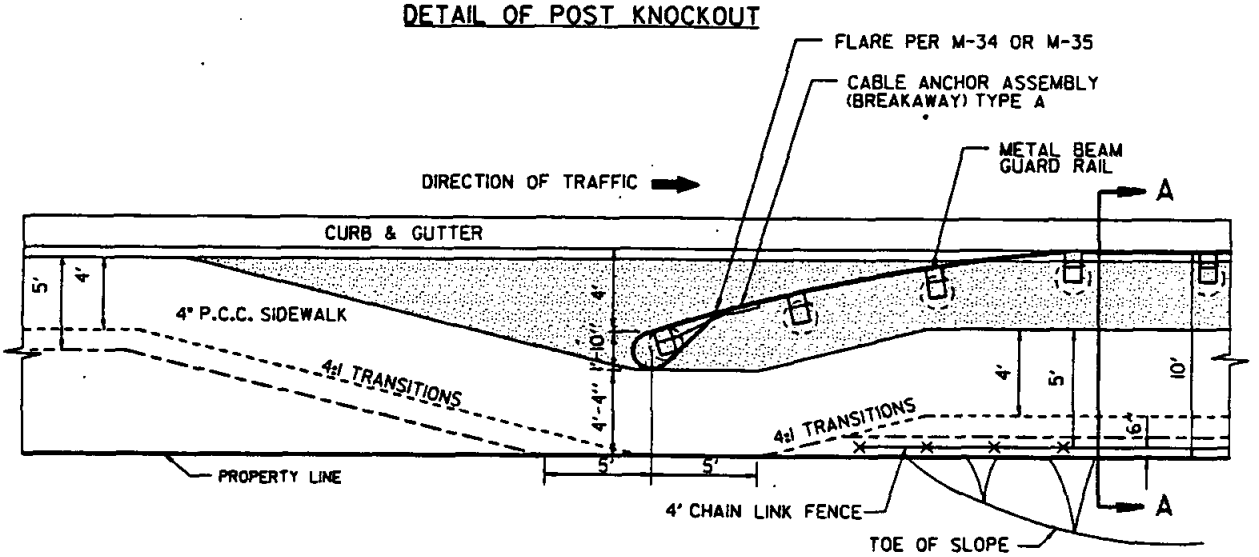

RECOMMENDED BY THE SAN DIEGO REGIONAL STANDARDS COMMITTEE	SAN DIEGO REGIONAL STANDARD DRAWING	Revision	By	Approved	Date
Chairman RCE 25902 Date 6-1-92	GUARD RAIL STANDARDS				
DRAWING NUMBER M-30					

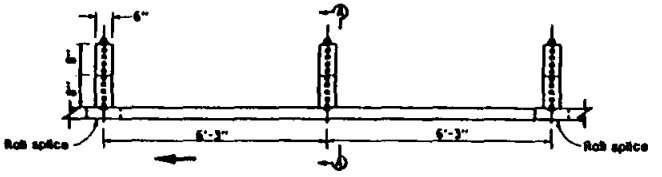

PLAN

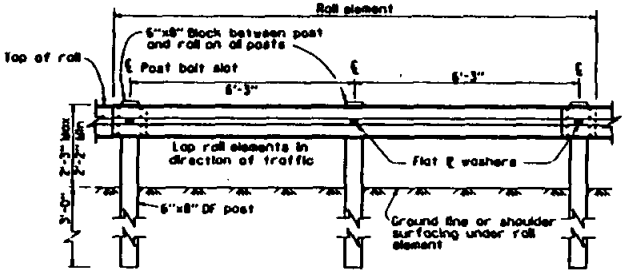

ELEVATION

METAL BEAM GUARD RAIL WITH WOOD POST AND BLOCKS

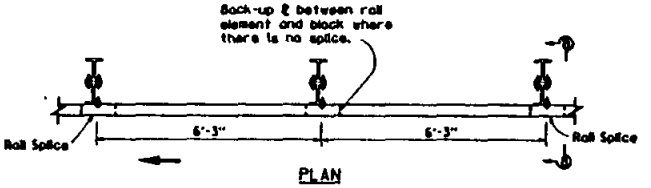

PLAN

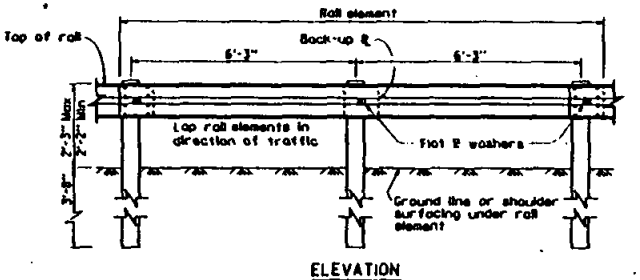

ELEVATION

METAL BEAM GUARD RAIL WITH W6x8.5 OR W6x9 STEEL POSTS AND BLOCKS

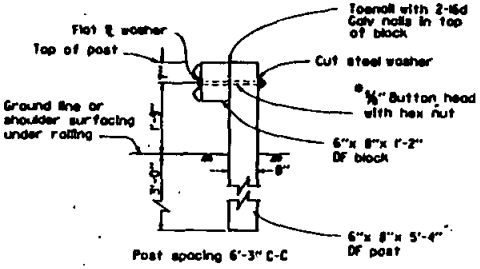

SECTION A-A

* Where bolt is reversed or ⅝" threaded rod is used to mount rail, no more than ½" of thread may be exposed on traffic side of rail.

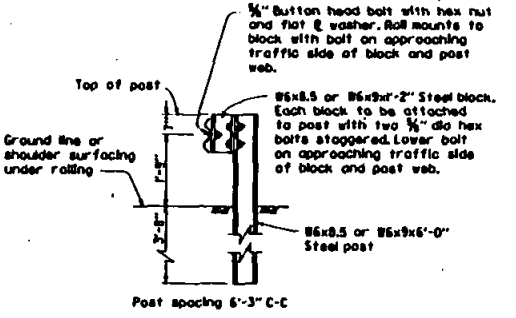

SECTION B-B

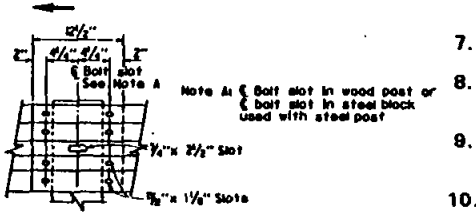

RAIL SPLICE DETAIL
ELEVATION VIEW

Splice the overlapped ends of the rail elements with ⅝"x 1¼" button head oval shoulder bolts and ⅝"x 1¼" recessed hex nut in the 15/16"x 1⅛" slots. Total 8 per rail splice; 4 per terminal section and end section. Lap rail elements in direction of traffic.

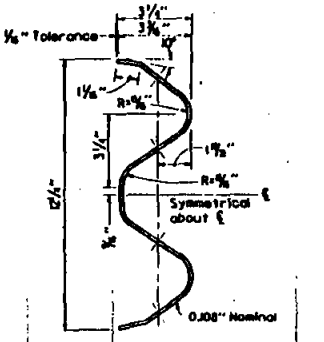

SECTION THRU
RAIL ELEMENT

NOTES

1. For details of standard hardware used to construct guard railing, see Standard Dwg. M-32.
2. For details of posts and blocks used to construct guard railing, see Standard Dwg. M-33.
3. Guard railing post spacing to be 6'-3" center to center, except as otherwise noted.
4. Top of rail to be 27" above the ground line or shoulder surfacing under the rail element.
5. For guard railing approach flares, see Standard Dwg. M-34 and M-35.
6. For embankment widening details to accommodate guard railing approach flares, see Standard Dwg. M-36.
7. For guard railing end anchor details, see Standard Dwg. M-37 and M-39.
8. For guard railing connection details to bridge railing, retaining walls and abutments, see Standard Dwg. M-40.
9. For guard railing connection details to bridge sidewalks and curbs, see Standard Dwg. M-41.
10. For dike positioning with guard railing installations, see Standard Dwg. M-36.
11. Direction of traffic indicated by →

REVISION	BY	APPROVAL	DATE

RECOMMENDED BY THE SAN DIEGO REGIONAL STANDARDS COMMITTEE

COORDINATOR R.C.E. 25902 DATE

SAN DIEGO REGIONAL STANDARD DRAWING

METAL BEAM GUARD RAILING

DRAWING NUMBER

M-31

DRAWING NUMBER

M-32

SAN DIEGO REGIONAL STANDARD DRAWING

METAL BEAM GUARD RAILING STANDARD
HARDWARE

RECOMMENDED BY THE SAN DIEGO REGIONAL STANDARDS COMMITTEE

COORDINATOR R.C.E. 25902 DATE

NOTES

1. Terminal sections will not be installed on the trailing end of guard railing placed adjacent to one-way roadways.
2. Back-up plate to be used between guard rail element and steel block on steel post where there is no rail element splice. See Standard Dwg. M-31.
3. For end section details, see Standard Dwg. M-40.
4. For terminal section Type C, see Standard Dwg. M-38.

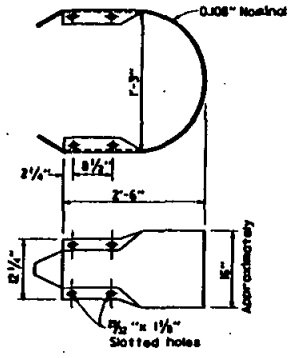

RETURN SECTION

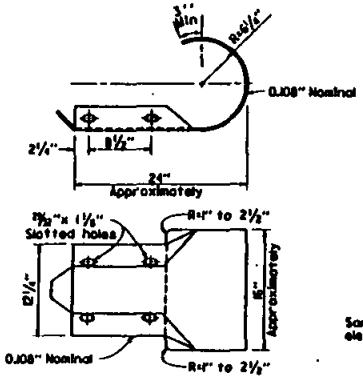

TERMINAL SECTION
TYPE A

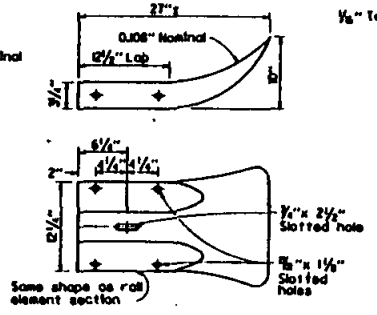

TERMINAL SECTION
TYPE B

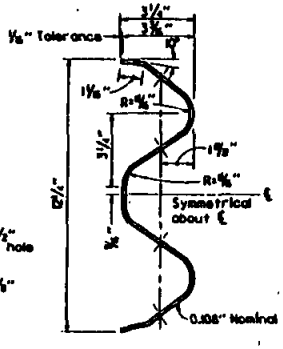

SECTION THRU
RAIL ELEMENT

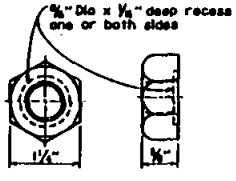

⅝" Ø RECESS NUT

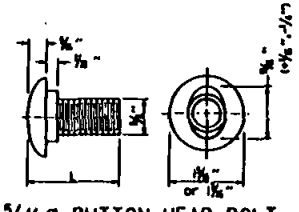

⅝" Ø BUTTON HEAD BOLT

L	THREAD LENGTH
1 1/4"	full thread length
2"	1 1/2" Min thread length
9½"	1 3/4" Min thread length
18"	2½" Min thread length

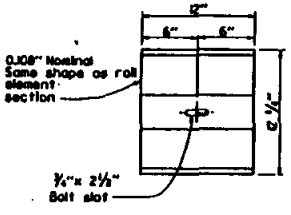

BACK-UP PLATE
See Note 2

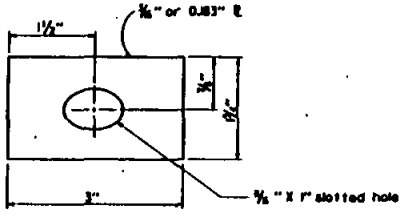

FLAT PLATE WASHER

REVISION	BY	APPROVAL	DATE

RECOMMENDED BY THE SAN DIEGO REGIONAL STANDARDS COMMITTEE

COORDINATOR R.C.E. 25902 DATE

SAN DIEGO REGIONAL STANDARD DRAWING

METAL BEAM GUARD RAILING POSTS AND BLOCKS

DRAWING NUMBER

M-33

NOTES

1. All holes in wood posts and blocks shall be 3/4" 0 ±1/16".
2. All holes in steel posts and blocks shall be 13/16" 0 maximum.
3. Contractor may submit alternative steel post details for Engineer's approval.
4. Dimensions shown for wood post are nominal.

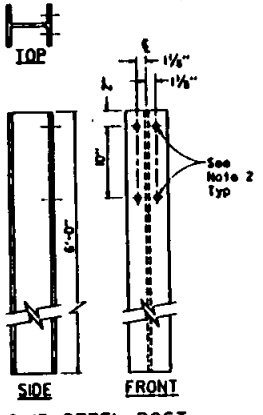

W6x15 STEEL POST

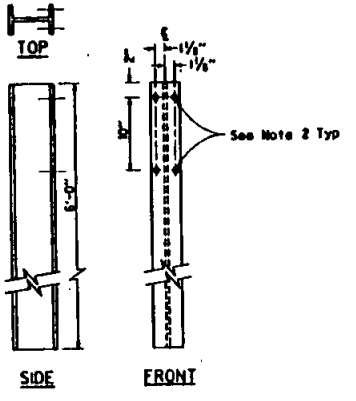

W6x8.5 OR W6x9 STEEL POST

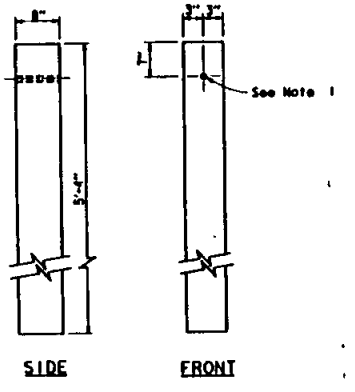

6" x 8" DOUGLAS FIR POST

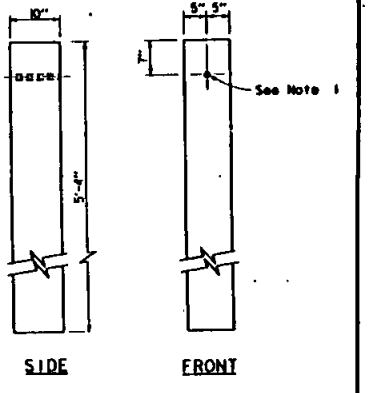

10" x 10" DOUGLAS FIR POST

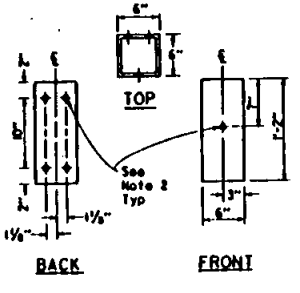

6"x6"x1'-2" (0.1875" THICK) TUBULAR STEEL BLOCK

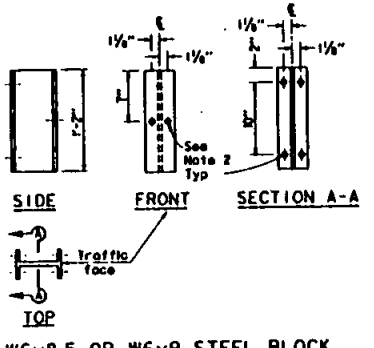

W6x8.5 OR W6x9 STEEL BLOCK

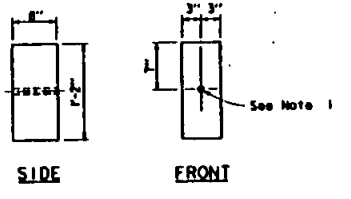

6" x 8" DOUGLAS FIR BLOCK

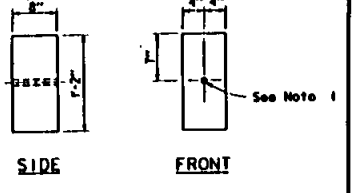

8" x 8" DOUGLAS FIR BLOCK

REVISION	BY	APPROVAL	DATE

DRAWING NUMBER

M-34

SAN DIEGO REGIONAL STANDARD DRAWING

GUARD RAIL FLARES

CAA = Cable Anchors Assembly
ETW = Edge of Traveled Way

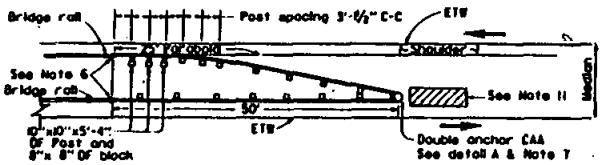

TYPE 4 FLARE
See Note 3

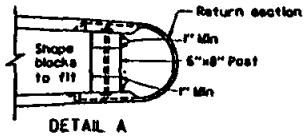

DETAIL A

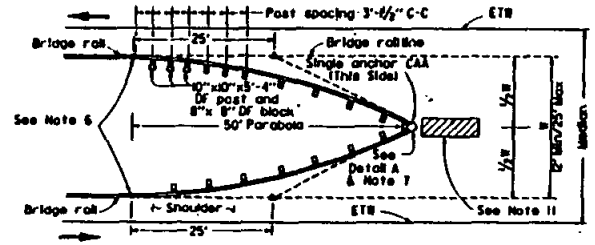

TYPE 3 FLARE
See Note 3

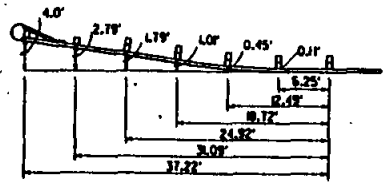

37'-6" PARABOLIC OFFSETS

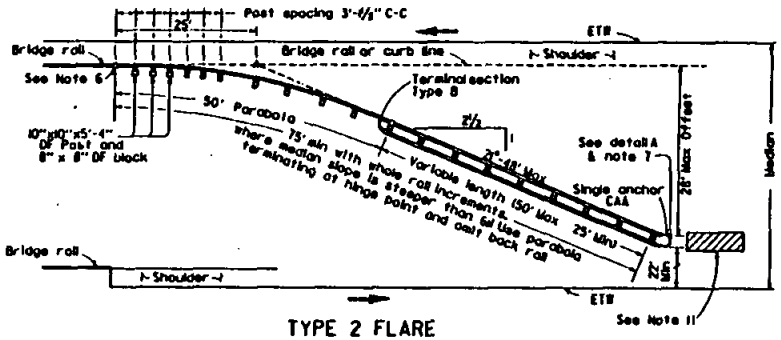

TYPE 2 FLARE
(See Note 3)

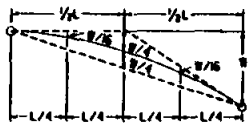

TYPICAL PARABOLIC LAYOUT

NOTES

1. Post, blocks and hardware to be used are shown on Standard Dwg. M-32 and M-33.
2. Guard rail post spacing to be 6'-3" center to center, except as otherwise noted.
3. Except as noted, posts shown are 6" X 8" DF, W6 X 8.5 or W6 X 9 steel posts and blocks may be specified for 6" X 8" DF posts and blocks where applicable. Where 10" X 10" DF posts and 8" X 8" DF blocks are shown, W6 X 15 steel posts and Tubular Steel 6" X 6" X 1'-2" (0.1875" thick) blocks may be specified where applicable.
4. Top of rail to be 27" above ground line or shoulder surfacing under the rail element.
5. Direction of traffic indicated by →
6. For connection details see Standard Dwg. M-40 or M-41.
7. For end anchor details see Standard Dwg. M-37 and M-39.
8. Terminal Sections will not be installed on trailing end of guard rail placed adjacent to one-way roadways.
9. Parabola portion of Type I Flare used at approach end of guard railing for embankment installations.
10. For embankment widening details to accommodate approach flares, see Standard Dwg. M-36.
11. Sand filled crash cushion, as approved by the Engineer is required for Type 2, 3, and 4 flares, when the end of the guard rail is within 30 feet of the edge of traveled way (ETW) of approaching traffic.

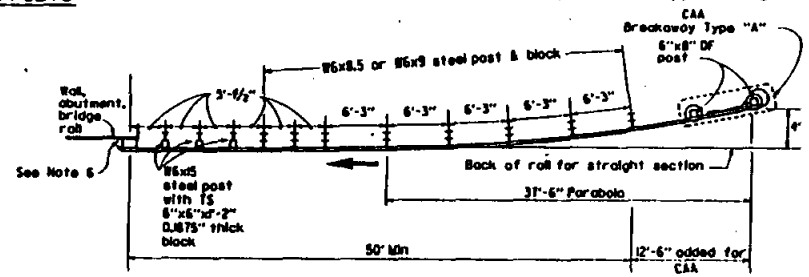

TYPE I FLARE
(STEEL POST INSTALLATION)
See Note 9

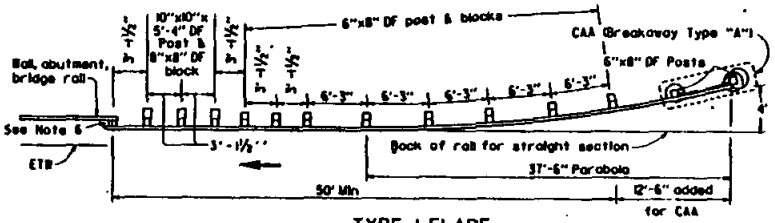

TYPE I FLARE
(WOOD POST INSTALLATION)
See Note 9

REVISION	BY	APPROVAL	DATE

RECOMMENDED BY THE SAN DIEGO REGIONAL STANDARDS COMMITTEE

COORDINATOR R.C.E. 25902 DATE

RECOMMENDED BY THE SAN DIEGO REGIONAL STANDARDS COMMITTEE

COORDINATOR R.C.E. 25902 DATE 4-20-92

SAN DIEGO REGIONAL STANDARD DRAWING

GUARD RAIL FLARES

DRAWING NUMBER

M-35

NOTES

1. Post, blocks and hardware to be used are shown on Standard Dwg. M-31 and M-32.
2. Guard rail post spacing to be 6'-3" center to center, except as noted.
3. Except as noted, posts shown are 6" X 8" DF, W6 X 8.5 or W6 X 9 steel posts and blocks may be specified for 6" X 8" DF posts and blocks where applicable. Where 10" X 10" DF posts and 8" X 8" DF blocks are shown, W6 X 15 steel posts and Tubular Steel 6" X 6" X 1'-2" (0.1875" thick) blocks may be specified where applicable.
4. Top of rail to be 27" above ground line or shoulder surfacing under the rail element.
5. A 4' minimum clearance is required between face of rail and a fixed object located directly behind a guard rail post. A fixed object located behind the rail but not behine a guard rail post requires a 3' minimum clearance. Where minimum clearance cannot be obtained use approach railing transition details for fixed objects.
6. Direction of traffic indicated by →
7. For connection details see Standard Dwg. M-40.
8. For end anchor details see Standard Dwg. M-37 and M-39.
9. Terminal Sections will not be installed on trailing end of guard rail placed adjacent to one-way roadways.
10. Type 7 flare has been deleted.
11. Sand filled crash cushion, as approved by the Engineer is required for Type 5 and 6 flares, when the end of the guard rail is within 30 feet of the edge of traveled way (ETW) of approaching traffic.

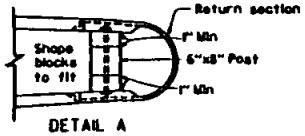

DETAIL A

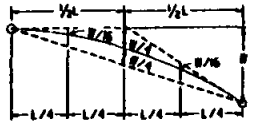

TYPICAL PARABOLIC LAYOUT

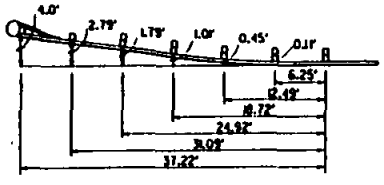

37'-6" PARABOLIC OFFSETS

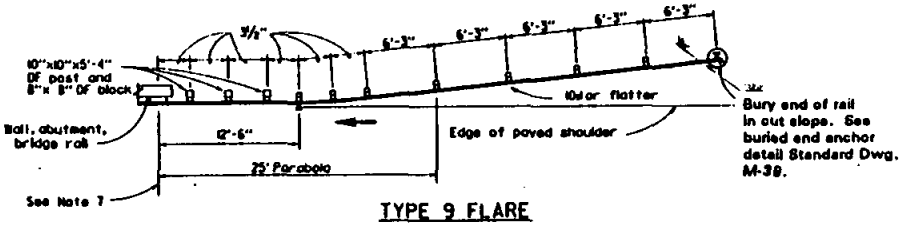

TYPE 9 FLARE

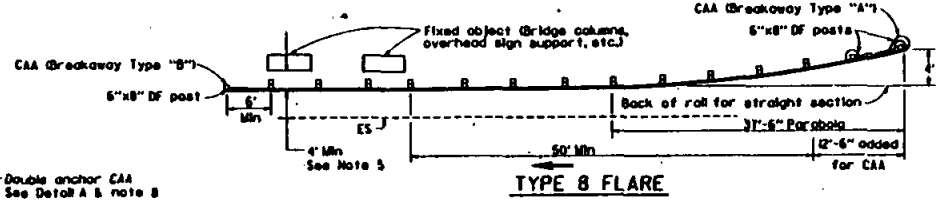

TYPE 8 FLARE

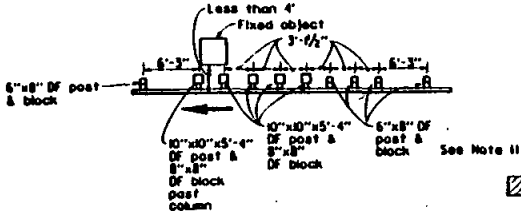

Use with Type 5, 6, and 8 flares when guard rail is less than 4' from fixed object. See Note 5. For a series of columns, additional 10"x10"x5'-4" DF post at 3'-1½" center to center spacing to be used between columns. Where 10"x10" DF posts and 8"x8" DF blocks are shown, W6x15 steel posts and Tubular Steel 6"x6"x1'-2" (0.1875" thick) blocks may be specified where applicable. Where 6"x8" DF posts and blocks are shown, W6x8.5 or W6x9 steel posts and blocks may be specified where applicable.

APPROACH RAILING TRANSITION DETAIL FOR FIXED OBJECT

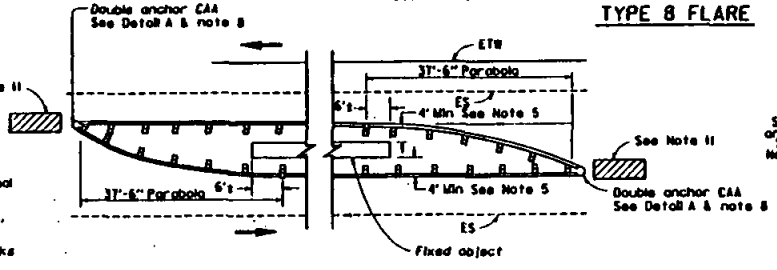

TYPE 5 FLARE

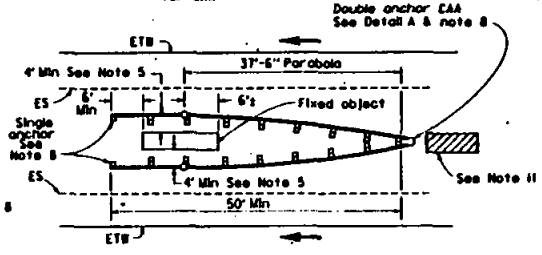

TYPE 6 FLARE

CAA = Cable Anchors Assembly
ETW = Edge of Traveled Way

REVISION	BY	APPROVAL	DATE

DRAWING NUMBER

M-36

SAN DIEGO REGIONAL STANDARD DRAWING

METAL BEAM GUARD RAILING MISCELLANEOUS DETAILS

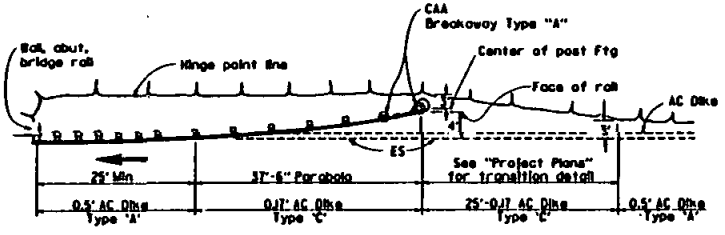

EMBANKMENT WIDENING AND DIKE PLACEMENT DIAGRAM
See Note 1 and 2

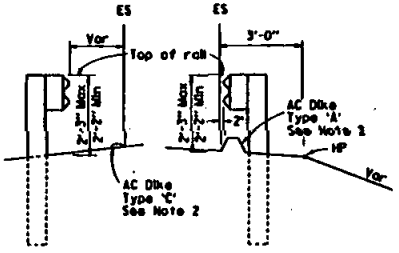

DIKE POSITIONING
(See Note 2)

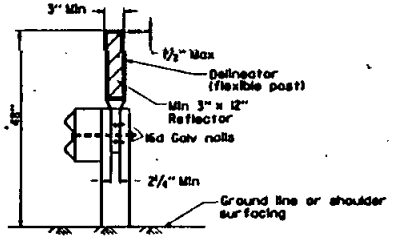

GUARD RAILING DELINEATION
See Note 4

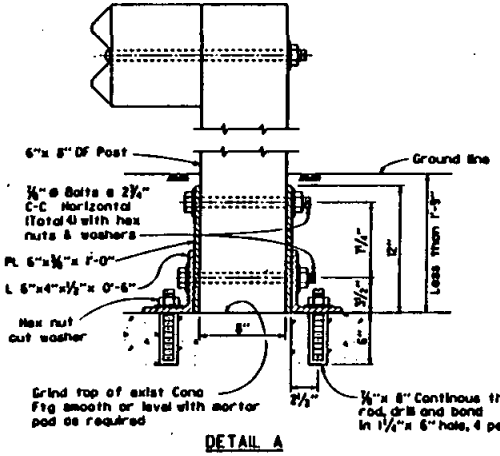

DETAIL A

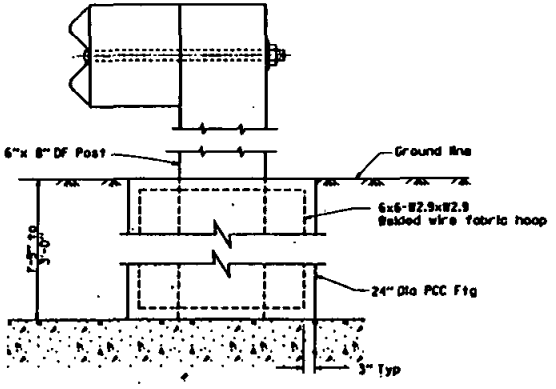

DETAIL B

Form socket in concrete to receive 6"x8" post or place concrete around 6"x8" post wrapped with one layer of ½" thick expanded polystyrene foam sheeting. Do not nail polystyrene to post. Post to be centered in concrete footing.

POST FOOTINGS
(See note 3)

Use where standard embedment of rolling post is restricted by underground concrete facilities such as footing of walls, columns, etc. Use Detail A where embedment of post is less than 1'-9". Use Detail B where embedment of post is between 1'-9" and 3'-0".

NOTES

1. For guard rail flare details, see Standard Dwg. M-34 and M-35.
2. When necessary to place dike in front of guard rail, only Type "C" dike may be used. For dike details see Standard Dwg. G-5.
3. For standard railing post embedment see Standard Dwg. M-31.
4. Guard railing delineation to be used when required by special provisions.
5. Direction of traffic indicated by →

REVISION	BY	APPROVAL	DATE

RECOMMENDED BY THE SAN DIEGO REGIONAL STANDARDS COMMITTEE

COORDINATOR R.C.E. 25902 DATE 4-30-92

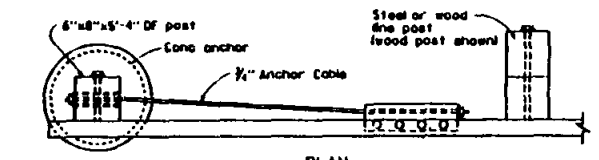

PLAN

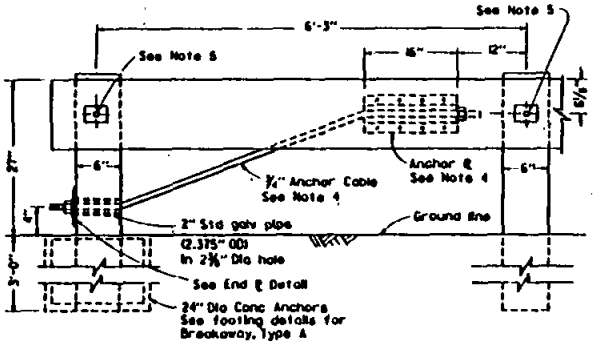

ELEVATION
CABLE ANCHOR ASSEMBLY
(BREAKAWAY, TYPE B)

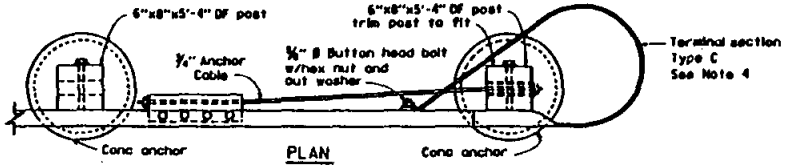

PLAN

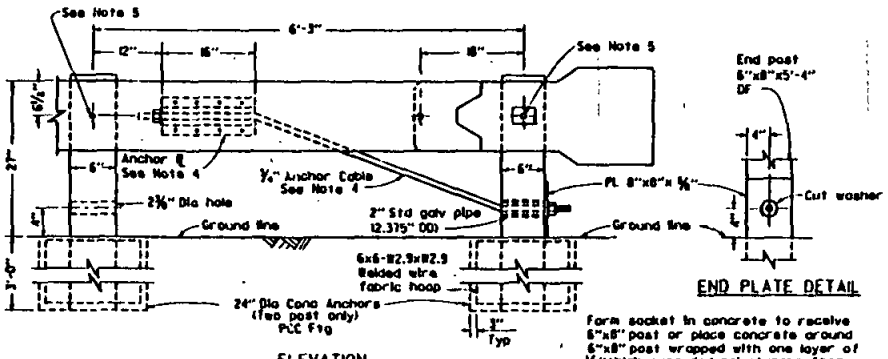

ELEVATION
CABLE ANCHOR ASSEMBLY
(BREAKAWAY, TYPE A)

END PLATE DETAIL

Form socket in concrete to receive 6"x8" post or place concrete around 6"x8" post wrapped with one layer of 1/2" thick expanded polystyrene foam sheeting. Do not nail polystyrene to post. Post to be centered in concrete footing.

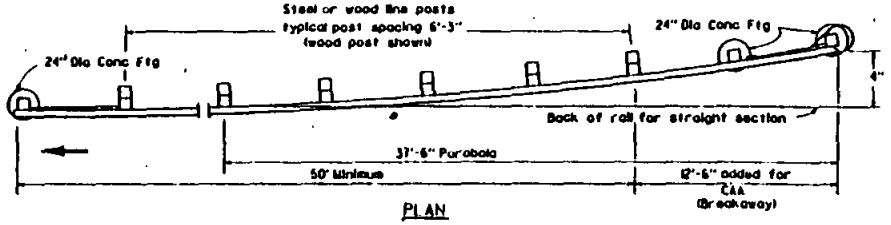

PLAN

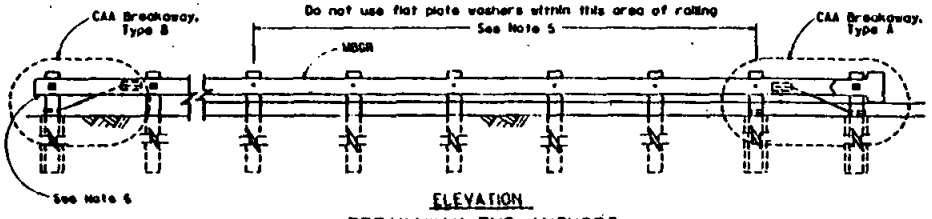

ELEVATION
BREAKAWAY END ANCHORS

NOTES

1. For typical use of cable anchor assembly (Breakaway, Type A), see Standard Dwg. M-34 and M-35.
2. Cable anchor assembly (Breakaway, Type B) is typically used on the trailing end of guard railing for embankment installations except two-way road beds less than 60 feet in width.
3. Direction of traffic indicated by →
4. For details of Terminal Section Type C, anchor plate and 3/4" cable, see Standard Dwg. M-38.
5. Do not use flat plate washers under head of rail mounting bolt at the second anchor post of Type A anchors and next five line posts. Use flat plate washers on other line posts and at the first anchor post of Type A anchor and at the Type B anchor post.
6. For trailing end of guard rail adjacent to one-way roadway omit terminal section.

REVISION	BY	APPROVAL	DATE

RECOMMENDED BY THE SAN DIEGO REGIONAL STANDARDS COMMITTEE

COORDINATOR R.C.E. 25902 DATE 4-20-82

SAN DIEGO REGIONAL STANDARD DRAWING

GUARD RAIL END ANCHORS (BREAKAWAY)

DRAWING NUMBER

M-37

DRAWING NUMBER

M-38

SAN DIEGO REGIONAL STANDARD DRAWING

GUARD RAIL END ANCHORS (BREAKAWAY HARDWARE)

RECOMMENDED BY THE SAN DIEGO REGIONAL STANDARDS COMMITTER

COORDINATOR R.C.E. 25902 DATE 4-20-92

NOTES

1. See Standard Drawing M-37 for Breakaway End Anchor details.

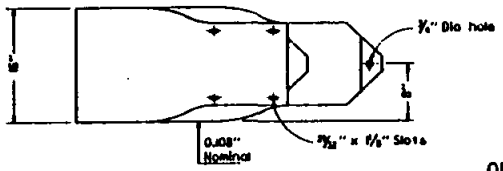

TERMINAL SECTION TYPE C-ELEVATION VIEW

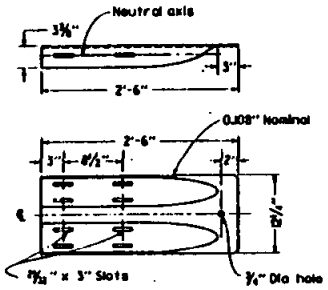

TERMINAL CONNECTOR FOR OPTIONAL DESIGN TERMINAL SECTION TYPE C

DETAIL C

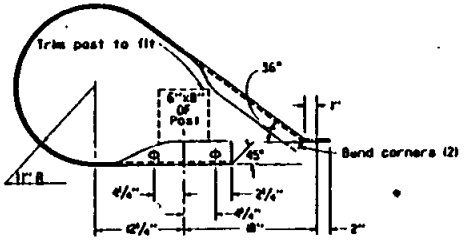

TERMINAL SECTION TYPE C

DETAIL A

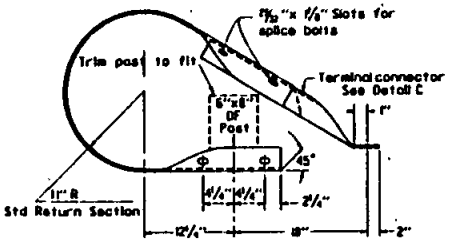

OPTIONAL DESIGN TERMINAL SECTION TYPE C

DETAIL B

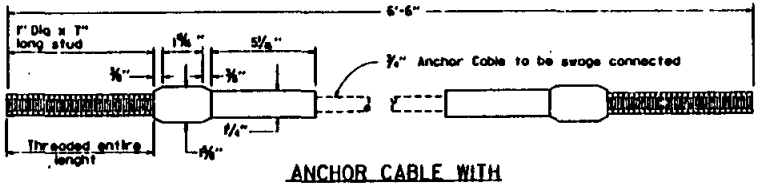

ANCHOR CABLE WITH SWAGED FITTING AND STUD

DETAIL E

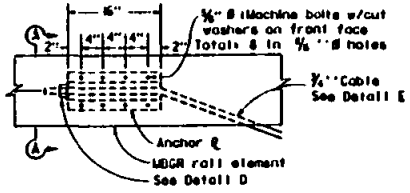

ANCHOR PLATE DETAIL

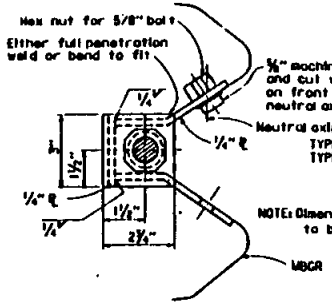

SECTION A-A (ALTERNATIVE TYPE 1)

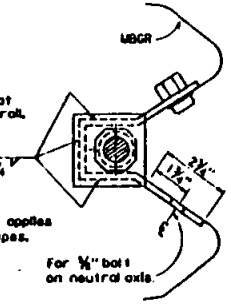

SECTION A-A (ALTERNATIVE TYPE 2)

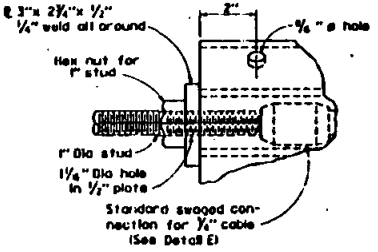

DETAIL D

REVISION	BY	APPROVAL	DATE

RECOMMENDED BY THE SAN DIEGO REGIONAL STANDARDS COMMITTEE

COORDINATOR R.C.E. 25902 DATE

SAN DIEGO REGIONAL STANDARD DRAWING

BARRIER AND GUARD RAIL END ANCHORS

DRAWING NUMBER

M-39

NOTES

1. For typical use of end anchors shown on this plan, See Standard Drawings M-34 and M-35.
2. Anchor cable to be parallel to guard rail for straight runs of rail. Anchor cable may have angle point at anchor plate if guard rail is curved.
3. 5'-6" with terminal section. May be less than with return sections if separate rods connect to concrete anchor.
4. Anchor rod hooks to be in contact with anchor reinforcement when concrete is placed. Wire ties may be used to position anchor rods.
5. Cable clip connection (Detail A) or clevis and bolt connection (Detail B) to be used with wood post guard railing installation. For steel post guard railing installations, clevis and bolt connection (Detail B) is to be used. Other alternative for attaching cable to anchor rod must be approved by the Engineer.

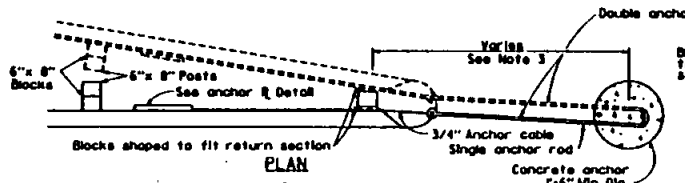

PLAN

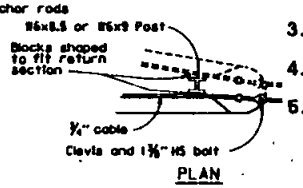

PLAN

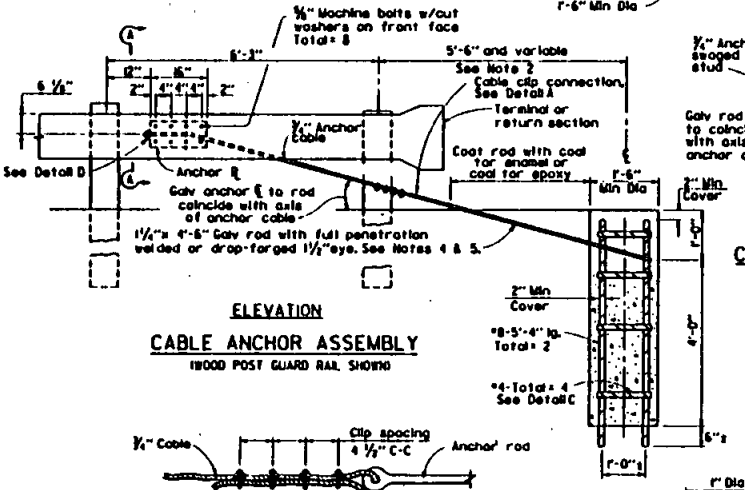

ELEVATION

CABLE ANCHOR ASSEMBLY

(WOOD POST GUARD RAIL SHOWN)

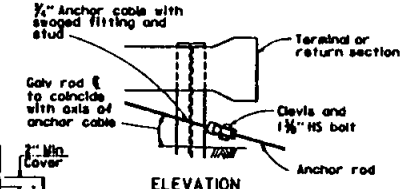

ELEVATION

CLEVIS AND BOLT CONNECTION

DETAIL B

(STEEL POST GUARD RAIL SHOWN)

See Note 5

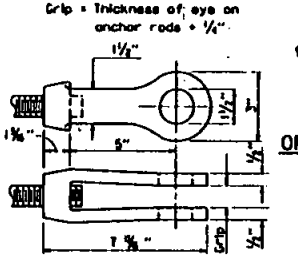

CLEVIS

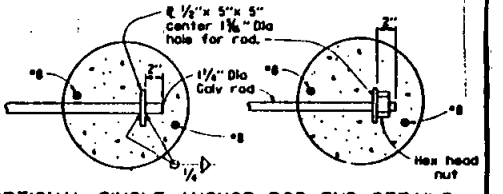

OPTIONAL SINGLE ANCHOR ROD END DETAILS

Not to be used for double anchors

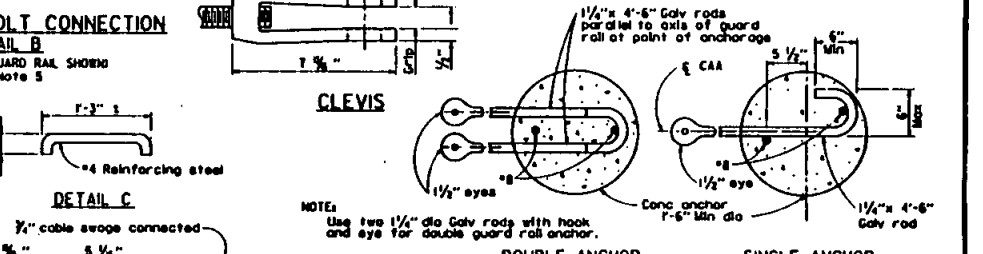

NOTE: Use two 1 1/4" dia Galv rods with hook and eye for double guard rail anchor.

DOUBLE ANCHOR

SINGLE ANCHOR

ANCHOR RODS

"U" bolts of clip on short end of cable only

"U" bolts tightened to 50 Ft lbs. torque

CABLE CLIP CONNECTION

DETAIL A

See Note 5

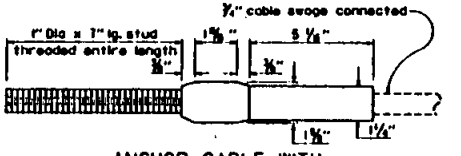

ANCHOR CABLE WITH SWAGED FITTING AND STUD

DETAIL E

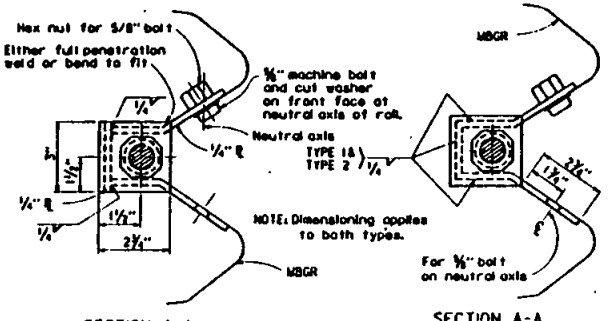

SECTION A-A (ALTERNATIVE TYPE 1)

SECTION A-A (ALTERNATIVE TYPE 2)

ANCHOR PLATE DETAILS

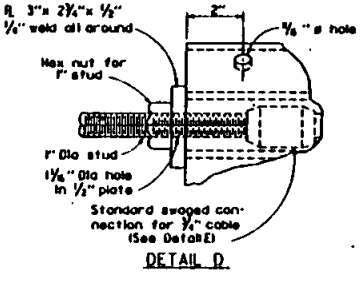

DETAIL D

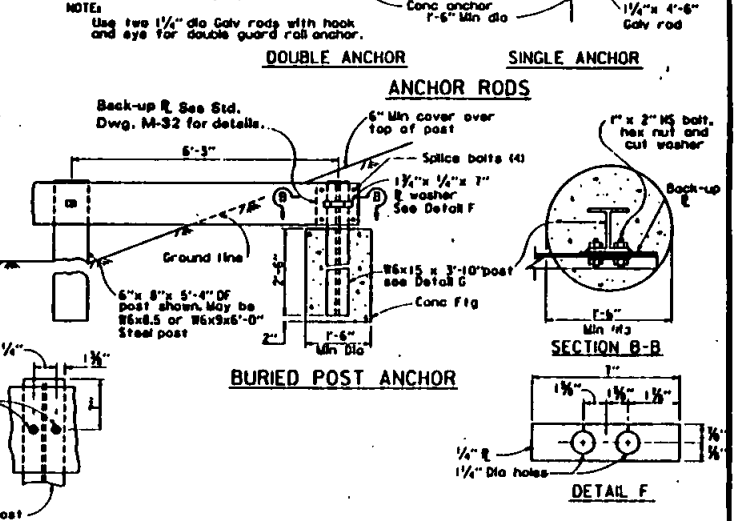

BURIED POST ANCHOR

SECTION B-B

DETAIL F

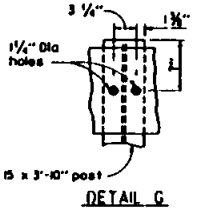

DETAIL G

REVISION	BY	APPROVAL	DATE

DRAWING NUMBER

M-40

SAN DIEGO REGIONAL STANDARD DRAWING

GUARD RAIL CONNECTIONS TO BRIDGE RAILS, RETAINING WALLS AND ABUTMENTS

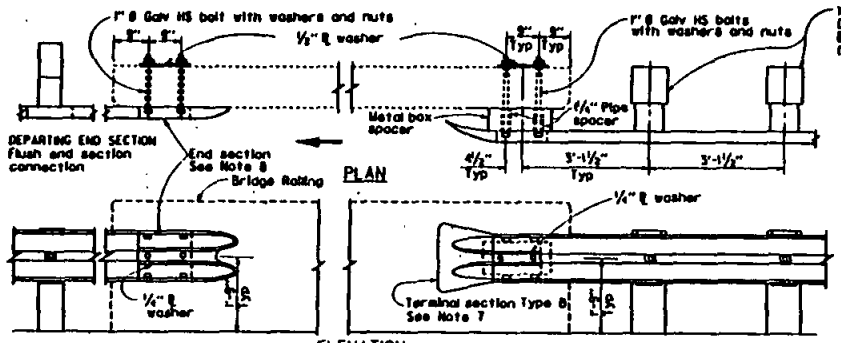

GUARD RAIL CONNECTION TO BRIDGE RAILING

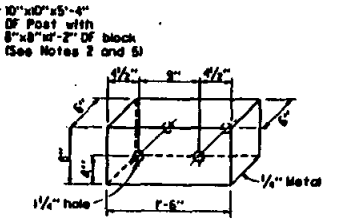

STRAIGHT METAL BOX SPACER

See Note 6

Use when approach guard rail is not tapered

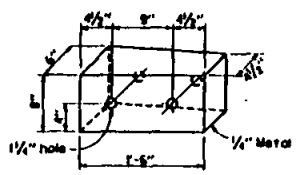

TAPERED METAL BOX SPACER

See Note 6

Use when approach guard rail is tapered

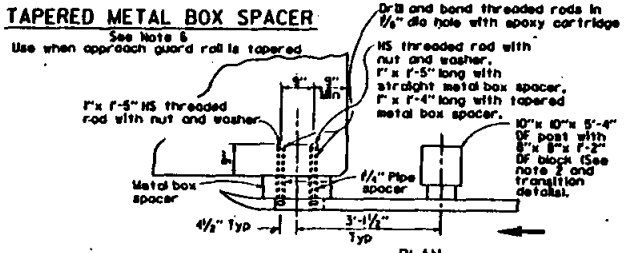

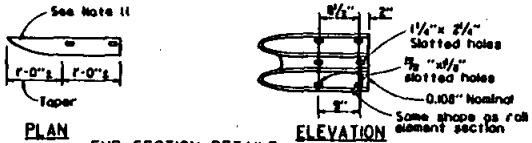

END SECTION DETAILS

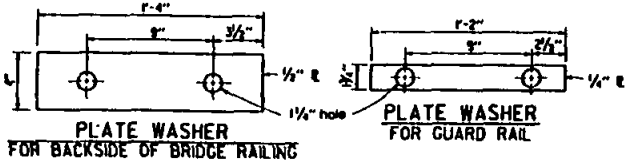

PLATE WASHER FOR BACKSIDE OF BRIDGE RAILING

PLATE WASHER FOR GUARD RAIL

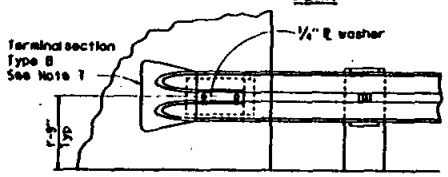

GUARD RAIL CONNECTION TO WALL OR ABUTMENT FACE

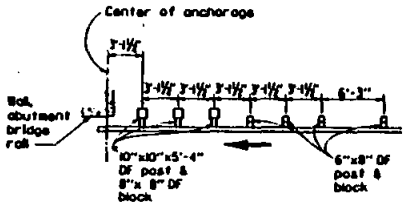

APPROACH RAILING TRANSITION WOOD POSTS

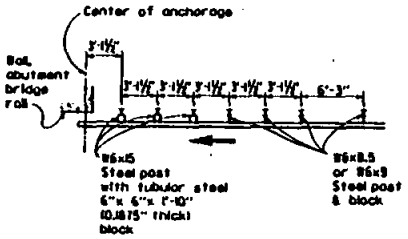

APPROACH RAILING TRANSITION STEEL POSTS

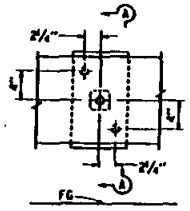

BLOCKOUT DETAIL-ELEVATION

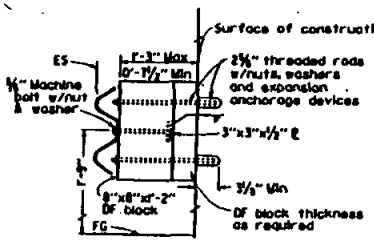

SECTION A-A

See Notes 9 and 10

GUARD RAIL ANCHORAGE TO WALL OR ABUTMENT

NOTES

1. These connection details apply to bridge rails, abutments and retaining walls. For additional connection details for bridge railing, see the project plans.
2. Where 10" X 10" DF post and 8" X 8" DF blocks are shown, W8 X 15 steel posts and tubular steel 6" X 6" X 1'-2" (0.1875" thick) blocks may be specified where applicable.
3. Additional details of post, blocks and hardware are shown on Standard Dwg. M-32 and M-33.
4. Direction of traffic indicated by →
5. For approach railing details, see Type I Flare on Standard Dwg. M-34 and transition details on this plan.
6. When metal box spacer is installed, place 1-1/4" X 5" and 1-1/4" X 4" pipe spacers on 1" bolts passing through interior of tapered box spacer and 1-1/4" X 5-1/4" pipe spacers on 1" bolts passing through interior of straight box spacer.
7. Terminal Sections will not be installed on trailing end of guard rail placed adjacent to one-way roadways. When terminal section is not installed, use backup plate between rail element and metal box spacer. See Standard Dwg. M-32 for backup plate details.
8. This type of connection may be used for both the approach and departing ends of structures on roadways 28 feet or less in width.
9. Use timber shims without posts where rail to wall or abutment clearance is less than 15 inches.
10. Do Not attach rail to bridge columns. Use separate posts as shown on Standard Dwg. M-35.
11. End sections may be cut from Type B terminal section or fabricated.

REVISION	BY	APPROVAL	DATE

RECOMMENDED BY THE SAN DIEGO REGIONAL STANDARDS COMMITTEE

COORDINATOR R.C.E. 25902 DATE

RECOMMENDED BY THE SAN DIEGO REGIONAL STANDARDS COMMITTEE

COORDINATOR R.C.E. 25902 DATE

SAN DIEGO REGIONAL STANDARD DRAWING

GUARD RAIL CONNECTION TO BRIDGE SIDEWALK AND CURBS

DRAWING NUMBER

M-41

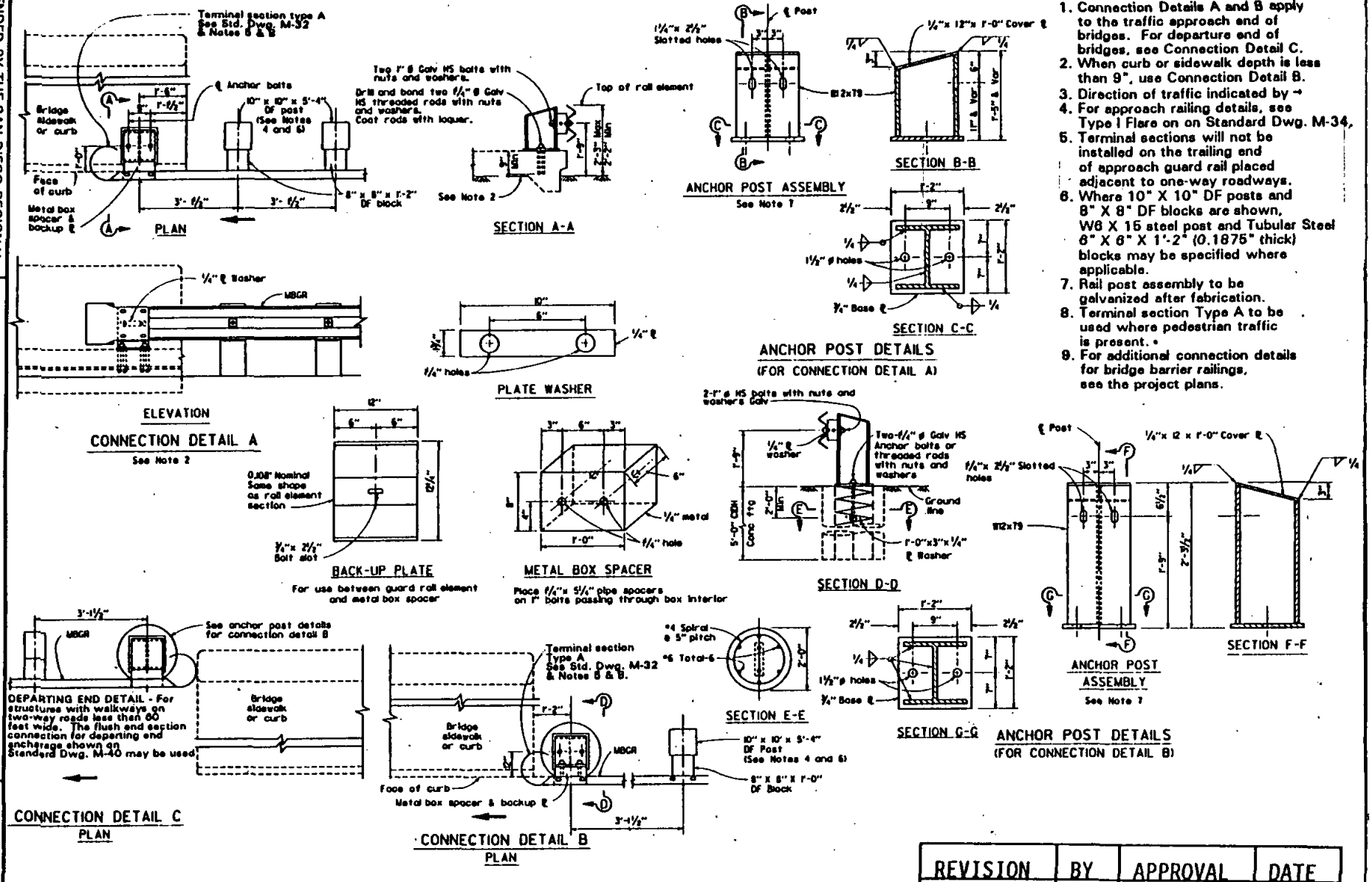

NOTES

1. Connection Details A and B apply to the traffic approach end of bridges. For departure end of bridges, see Connection Detail C.
2. When curb or sidewalk depth is less than 9", use Connection Detail B.
3. Direction of traffic indicated by →
4. For approach railing details, see Type I Flare on on Standard Dwg. M-34.
5. Terminal sections will not be installed on the trailing end of approach guard rail placed adjacent to one-way roadways.
6. Where 10" X 10" DF posts and 8" X 8" DF blocks are shown, W6 X 15 steel post and Tubular Steel 6" X 6" X 1'-2" (0.1875" thick) blocks may be specified where applicable.
7. Rail post assembly to be galvanized after fabrication.
8. Terminal section Type A to be used where pedestrian traffic is present.
9. For additional connection details for bridge barrier railings, see the project plans.

REVISION	BY	APPROVAL	DATE

DRAWING NUMBER

M-42

SAN DIEGO REGIONAL STANDARD DRAWING

CONCRETE BARRIER TYPE 50

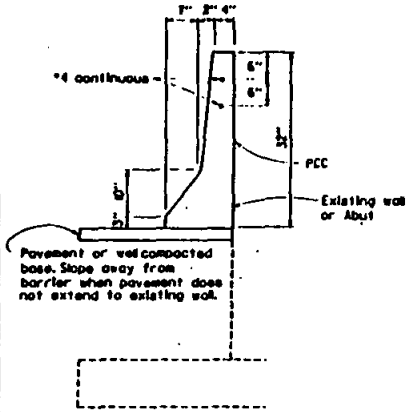

CONCRETE BARRIER

TYPE 50D

Details similar to Type 50 except as noted

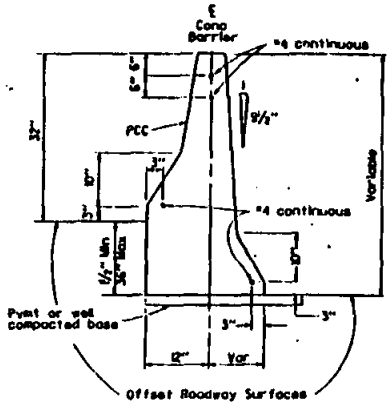

CONCRETE BARRIER

TYPE 50C

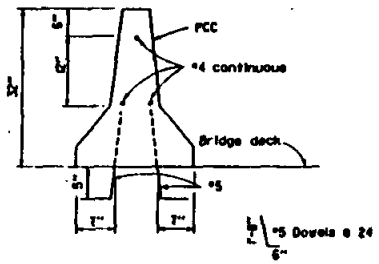

CONCRETE BARRIER

TYPE 50A

Details similar to Type 50 except as noted
See Note 7

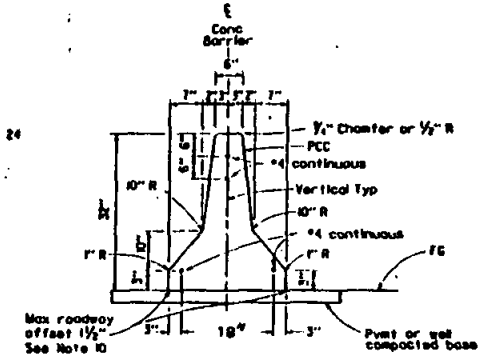

CONCRETE BARRIER

TYPE 50

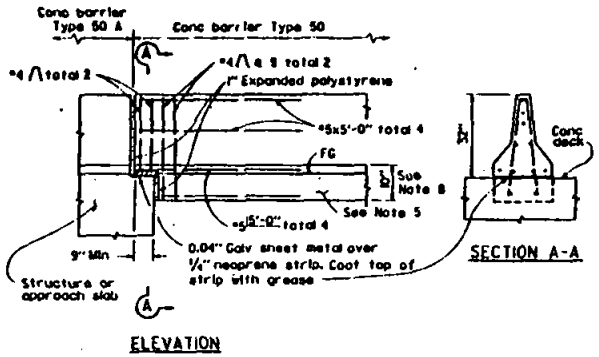

ELEVATION

CONNECTION TO STRUCTURE

Details similar to Type 50 except as noted
Barrier End Anchor when necessary

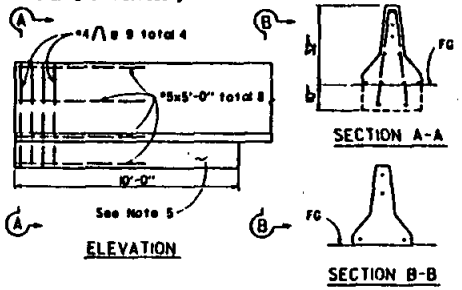

ELEVATION

BARRIER END ANCHOR

See Note 9

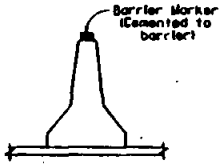

MEDIAN BARRIER DELINEATION

See Notes 11 and 12

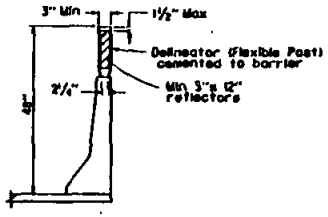

CONCRETE BARRIER DELINEATION

(For barriers not located in median)
See Note 11

NOTES

1. See Standard Dwg. M-32 for concrete barrier transitions at bridge column and sign pedestals.
2. Opening into existing drainage inlets shall not extend above the 3-inch vertical face at bottom of the barrier.
3. Where the barrier is added to the face of an existing concrete structure, matching existing weep holes.
4. Contractor may submit alternative details for Engineer's approval.
5. Footing monolithic or doweled with 2-#8X0'-8"@ 24. Required at barrier ends and at interruptions in barrier.
6. See Standard Dwg. M-33 for glare screen details.
7. Expansion joints in concrete barrier shall be located at all deck, pavement and principal wall joints. Expansion joint filler material shall be the same size as joint or 1/2" minimum.
8. 10" Barrier footing extends 10' back from structure.
9. For transition to TBB see Standard Dwg. M-34.
10. Where roadway offset is greater than 1-1/2", see Concrete Barrier Type 50C.
11. Barrier delineation to be used when required by the special provisions.
12. Spacing of barrier markers to match spacing of raised pavement markers on the adjacent median edgeline pavement delineation.

REVISION	BY	APPROVAL	DATE

RECOMMENDED BY THE SAN DIEGO REGIONAL STANDARDS COMMITTEE

COORDINATOR R.C.E. 25902 DATE

4-20-92

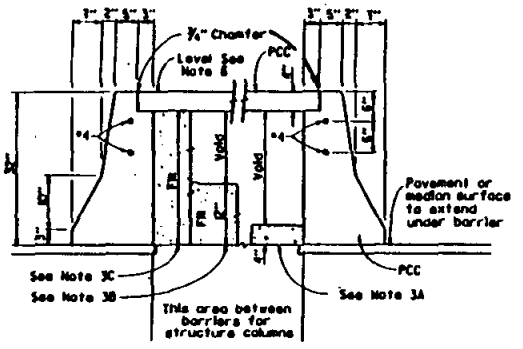

SECTION A-A

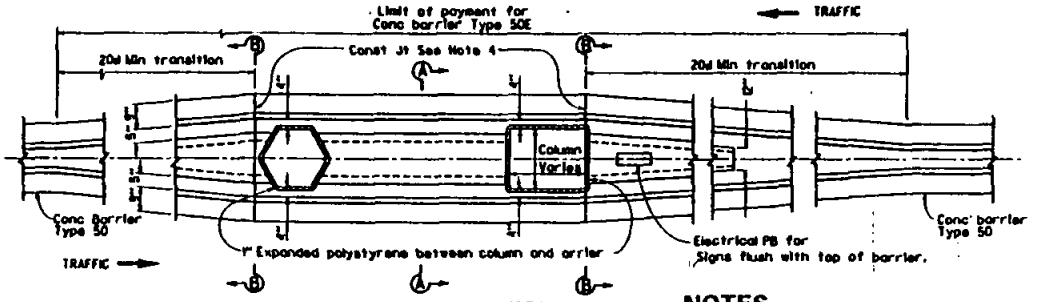

NON-RECTANGULAR COLUMN

RECTANGULAR COLUMN

TRANSITION AT BRIDGE COLUMN

CONCRETE BARRIER TYPE 50E

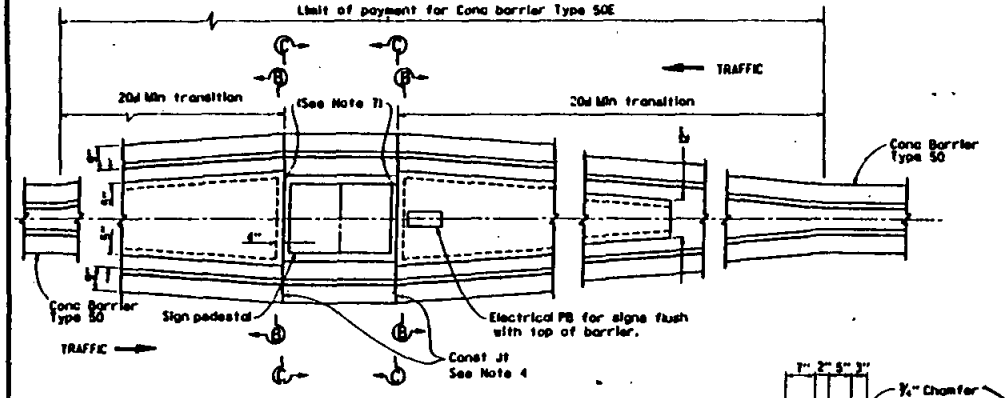

TRANSITION AT SIGN PEDESTAL

CONCRETE BARRIER TYPE 50E

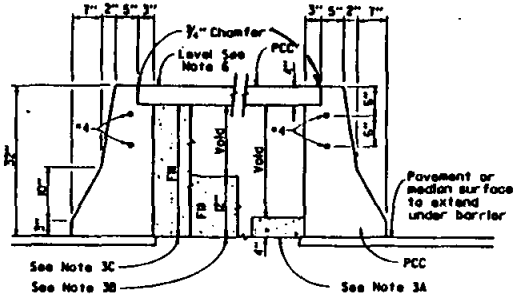

SECTION B-B

NOTES

1. See Standard Dwg. M-31 for Concrete barrier Type 50.
2. See Standard Dwg. M-33 for Headlight glare Screen Details.
3. Contractor options for fill between barrier walls:
   A: Place 4" PCC at base between barrier walls.
   B: Place 12" of granular material at base between walls,
   C: Place granular material from base to bottom of 4" cap.
   Forming material for 4" cap may remain in place.
4. Reinforcing steel shall extend continuous through construction joints.
5. See "Overhead Sign" plans for sign pedestal elevations on new construction.
6. Adjust height of barier on low side of offset or superelevated roadways to provide level grade across top of Type 50E Barrier.
7. 4" PCC vertical walls at existing sign pedestals.

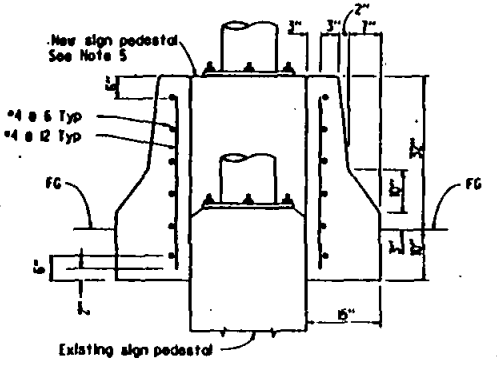

SECTION C-C

REVISION	BY	APPROVAL	DATE

RECOMMENDED BY THE SAN DIEGO REGIONAL STANDARDS COMMITTEE

COORDINATOR R.C.E. 25902 DATE 4-20-92

SAN DIEGO REGIONAL STANDARD DRAWING

CONCRETE BARRIER TYPE 50E

DRAWING NUMBER

M-43

DRAWING NUMBER

M-44

SAN DIEGO REGIONAL STANDARD DRAWING

TEMPORARY RAILING (TYPE K)

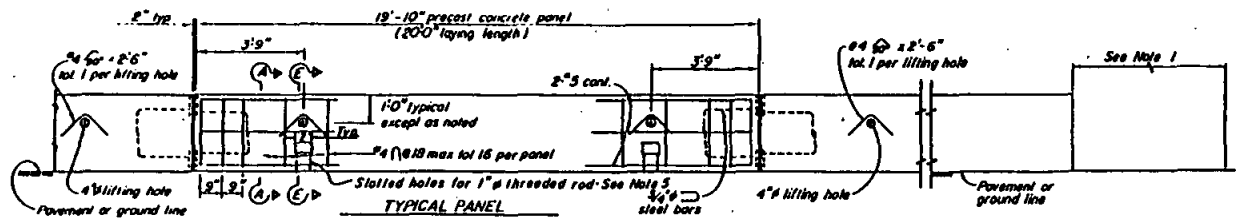

TYPICAL PANEL

Weight: 3.9 tons per panel

ELEVATION

NOTES

1. For end treatment, layout and crash cushions, where needed, see Project Plans or Special Provisions.
2. All 3-1/2" gaps at removable panels are to be backed at the base with # 8X10" dowel or 1"ø pin each side of joint. See Section K-K.
3. Alternative details for lifting the precast concrete panels of the Temporary Railing may be submitted by the Contractor for the Engineer's approval.
4. Where Temporary Railing (Type K) is placed on curves and radii that are too severe to connect panels with balled joints, the railing is to be backed continuously with earth fill. See Section H-H.
5. Attach units to deck slabs when required by Plans.

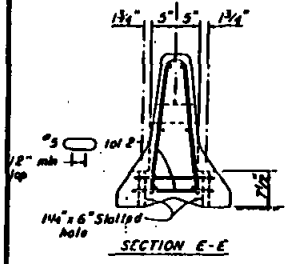

SECTION E-E

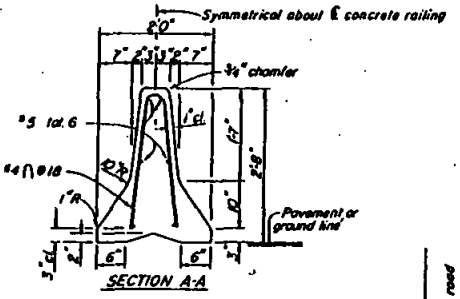

SECTION A-A

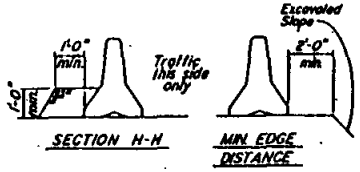

SECTION H-H

MIN EDGE DISTANCE

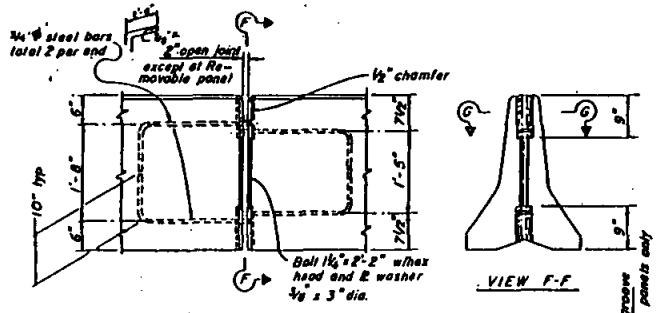

'ELEVATION'

VIEW F-F

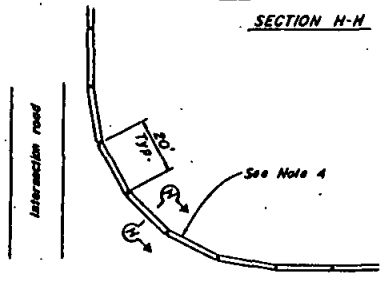

CURVED LAYOUT

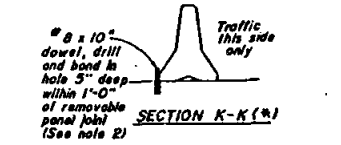

SECTION K-K (*)

* Section K-K is for P.C.C. pavement. Alternative detail, 1" ø pins 2'-0" long driven in A.C. or firm soil permitted, minimum 1'-6" deep.

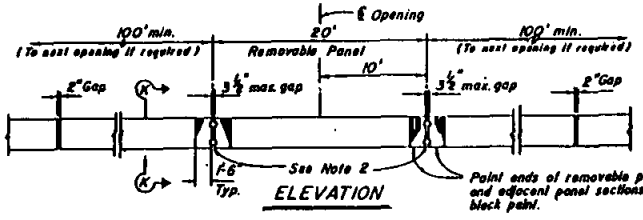

ELEVATION

TYPICAL OPENING DETAIL

ALTERNATIVE HEAD DETAIL

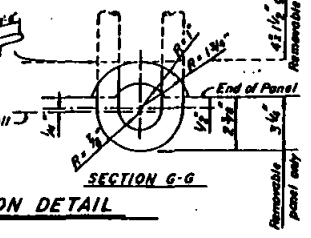

SECTION G-G

BOLT CONNECTION DETAIL

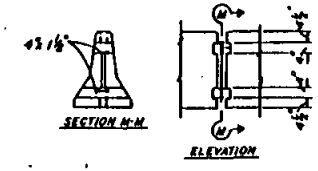

SECTION H-H

ELEVATION

REMOVABLE PANEL GROOVE DETAILS

REVISION	BY	APPROVAL	DATE

RECOMMENDED BY THE SAN DIEGO REGIONAL STANDARDS COMMITTER

COORDINATOR R.C.E. 25902 DATE

SEWERAGE SYSTEMS

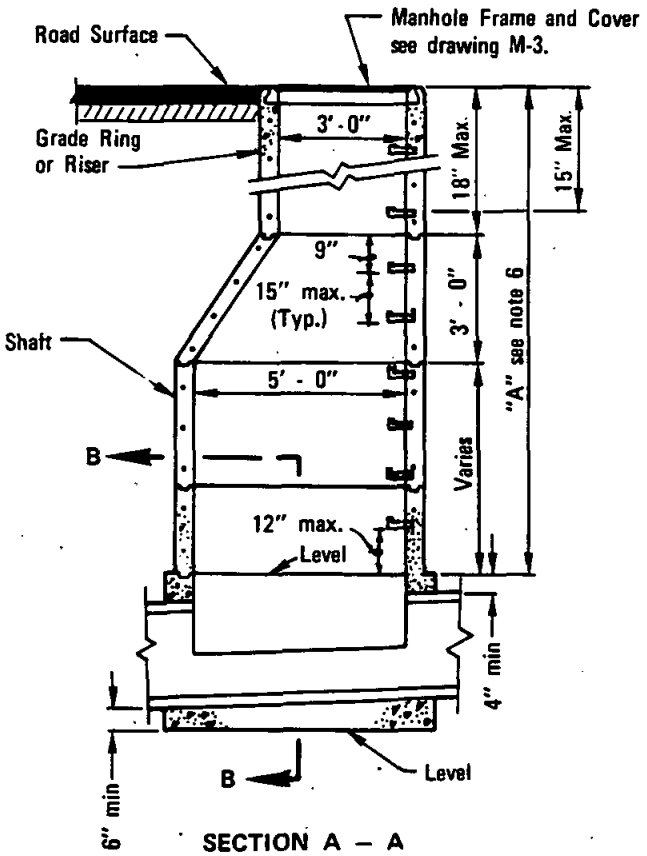

SECTION A – A

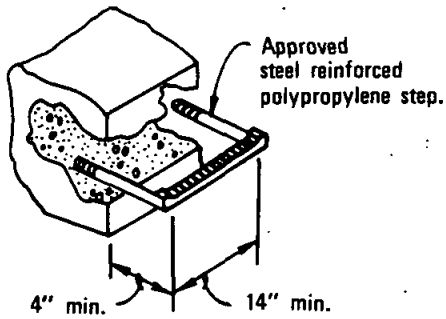

STEP DETAIL

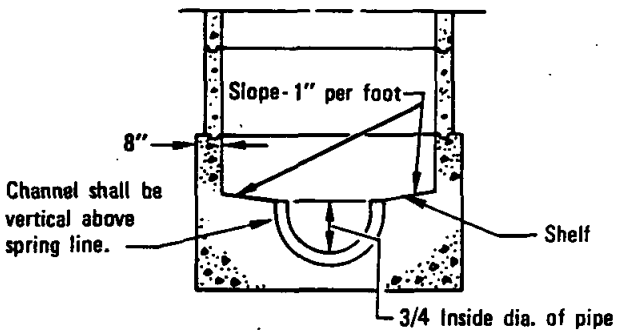

SECTION B – B

NOTES:

1. Manhole frame and all joints shall be set in Class "C" mortar.
2. All precast components shall be manufactured in accordance with ASTM C-478.
3. Vertical wall of cone shall be on the upstream side of the manhole.
4. Concrete base shall be 560-C-3250.
5. Approved water stop required for plastic pipe connectors.
6. Precast sections shall be used within dimension "A" as required, in order of preference listed:
   - A. Cone (notched for pipe if dimension "A" is less then 3').
   - B. 6" to 18" of 3' diameter grade rings/and/or risers.
   - C. 5' diameter shaft variable height.
   - D. Top step to be 15" Max. from top of frame and cover.
7. Flexible pipe joints shall be required within 12" of inside face of manhole except for plastic pipe.
8. All patching within manhole base shall be epoxy mortar.
9. Prior approval of precast base is required by the Agency.

LEGEND ON PLANS

M.H. No. 2

RECOMMENDED BY THE SAN DIEGO REGIONAL STANDARDS COMMITTEE Allan A Kershaw Dec. 1975 Coordinator R.C.E. 19807 Date	SAN DIEGO REGIONAL STANDARD DRAWING	Revision	By	Approved	Date
		Note 7	TRP	M.B.	10-82
		Conc.		M.B.	5-86
	MANHOLE 5'x 3' DIAMETER	Notes		J.H.	9-88
DRAWING NUMBER S-2		Conc base	JP		5-92

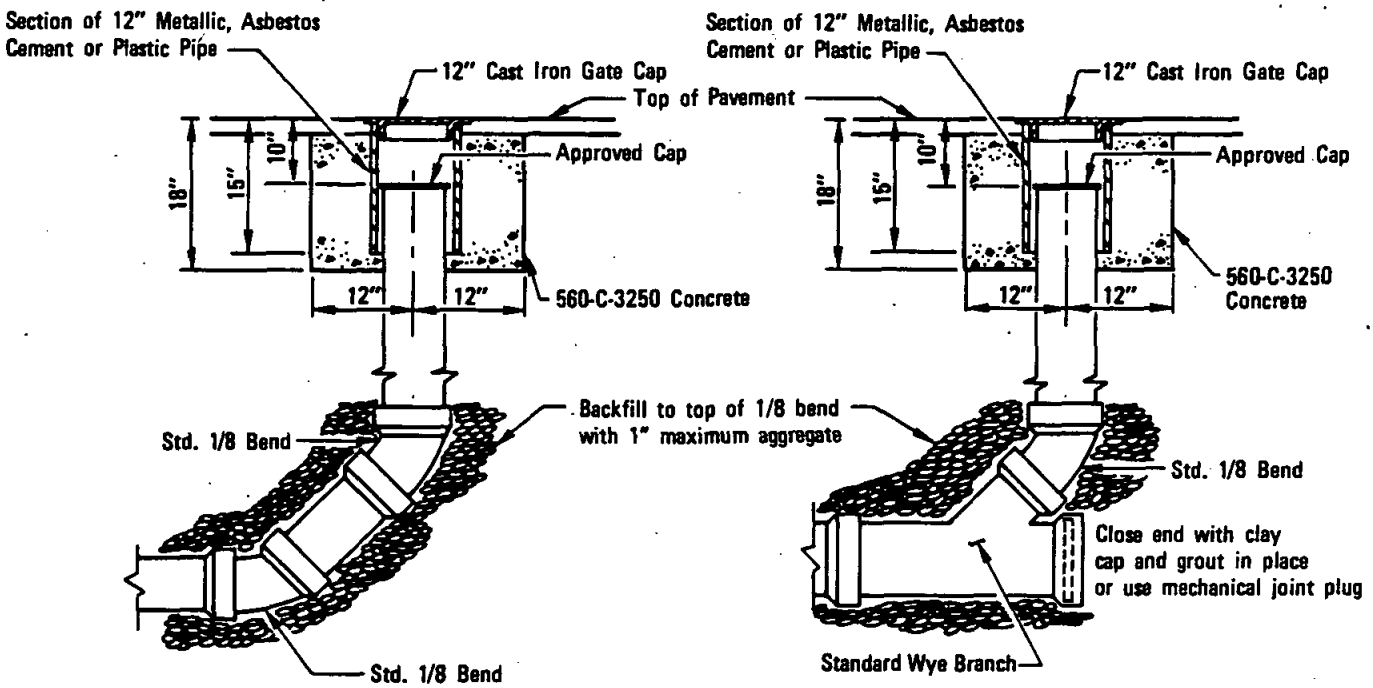

TYPE A

TYPE B

NOTES

1. Gate cap shall be labeled "Sewer".
2. Cleanouts may be used for either V.C.P. or plastic sewer mains.
3. Riser to be same diameter as sewer main.

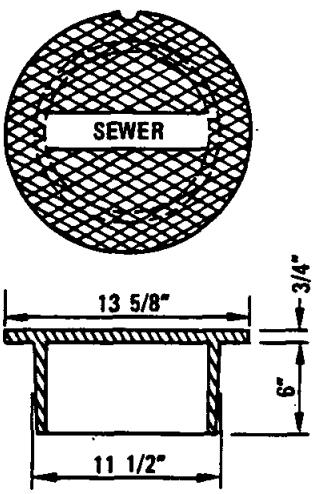

GATE CAP
(Heavy Duty)

LEGEND ON PLANS

Revision	By	Approved	Date
Conc.	[illegible]	[illegible]	5-86

SAN DIEGO REGIONAL STANDARD DRAWING

SEWER MAIN CLEANOUT

RECOMMENDED BY THE SAN DIEGO REGIONAL STANDARDS COMMITTEE

[illegible] Dec. 1975
Coordinator R.C.E. 19807 Date

DRAWING NUMBER S-3

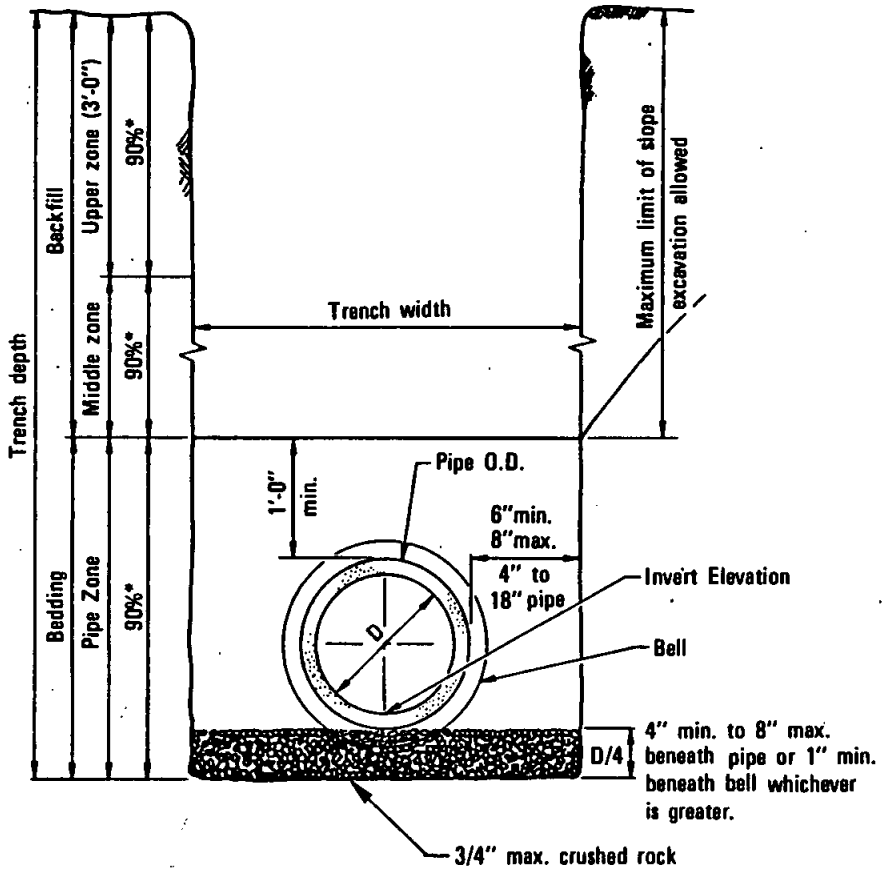

TYPE A
STANDARD INSTALLATION

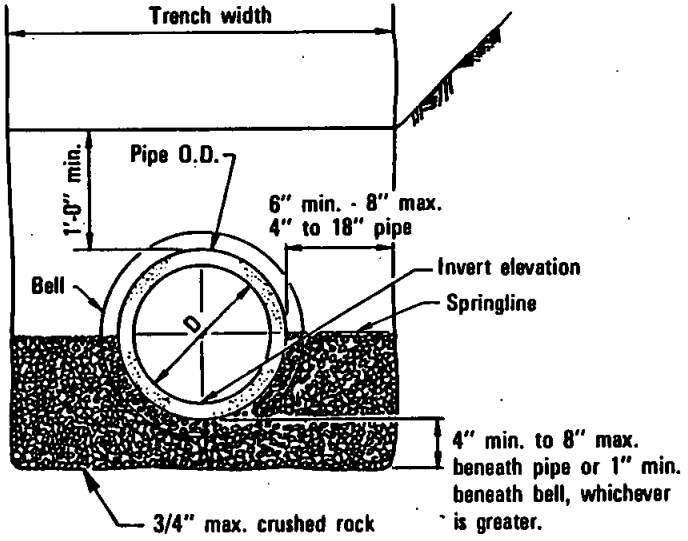

TYPE B
ROCK TO SPRINGLINE

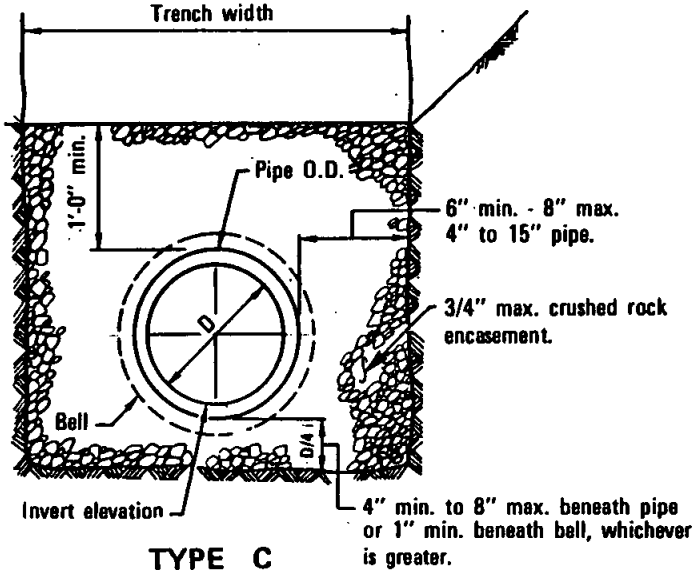

TYPE C
ROCK ENVELOPE

NOTES

1. For trenching in improved streets, see Standard Drawings G-24 or G-25 for trench resurfacing.
2. (*) indicates minimum relative compaction.
3. Minimum depth of cover from the top of pipe to finish grade for all sanitary sewer installations shall be 3 feet. For cover less than 3 feet, see Standard Drawing S-7 for concrete encasement.
4. See Type A installation for details not shown for Types B and C.

RECOMMENDED BY THE SAN DIEGO REGIONAL STANDARDS COMMITTEE

Coordinator R.C.E. 19807 Date Oct. 1973

DRAWING NUMBER S-4

SAN DIEGO REGIONAL STANDARD DRAWING

PIPE BEDDING AND TRENCH BACKFILL FOR SEWERS

Revision	By	Approved	Date
A, B, & C	RC	M.B.	5-86

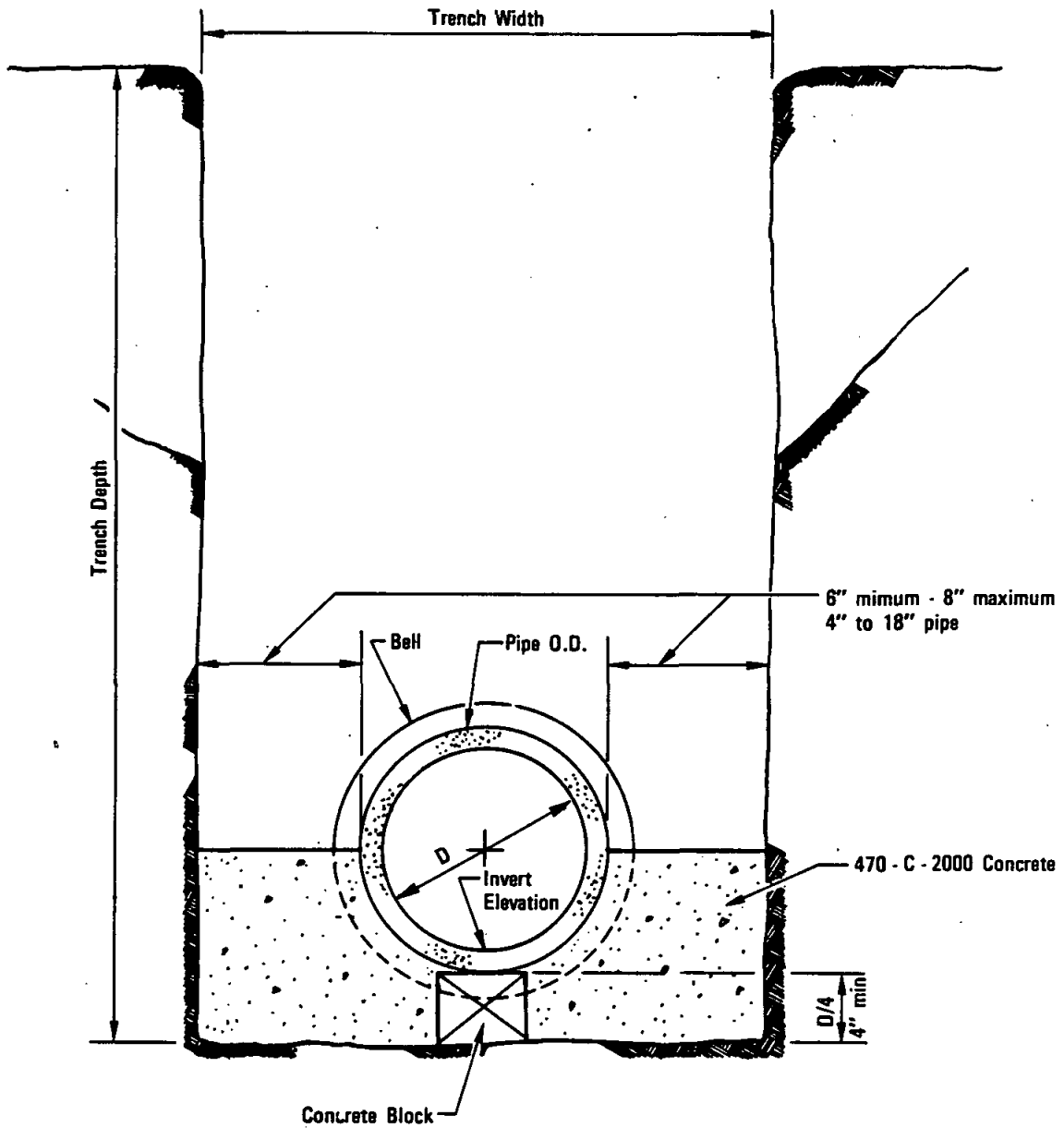

SECTION

LEGEND ON PLANS

RECOMMENDED BY THE SAN DIEGO REGIONAL STANDARDS COMMITTEE Coordinator R.C.E. 15807 Date Dec. 1975	SAN DIEGO REGIONAL STANDARD DRAWING	Revision	By	Approved	Date
DRAWING NUMBER S-6	CONCRETE CRADLE				

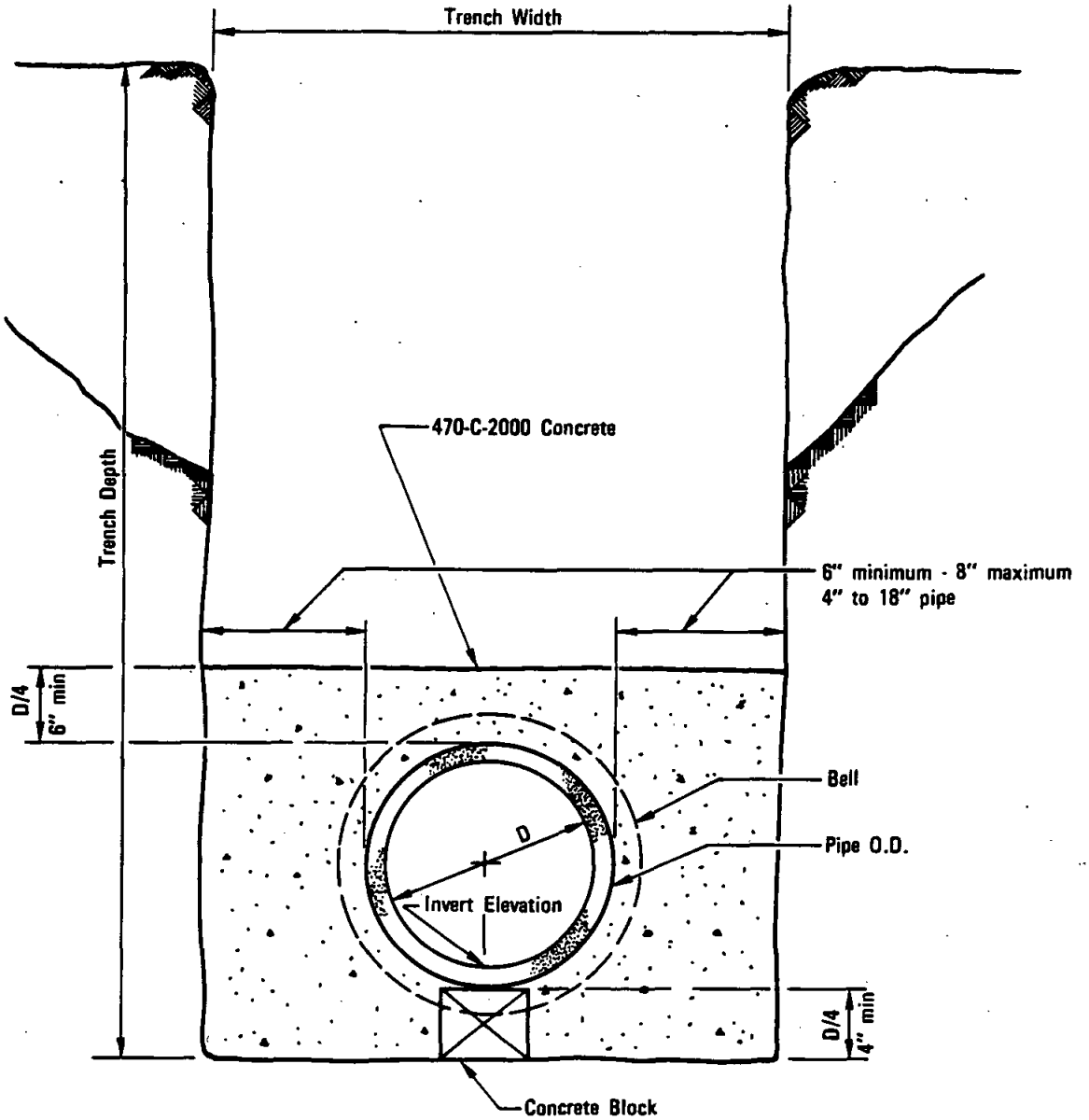

SECTION

NOTE:

Encase pipe to the nearest flexible joint.

LEGEND ON PLANS

Revision	By	Approved	Date
Note	TRP	M.B.	10-82

SAN DIEGO REGIONAL STANDARD DRAWING

CONCRETE ENCASEMENT

RECOMMENDED BY THE SAN DIEGO REGIONAL STANDARDS COMMITTEE

Allan A. Kneuland — Coordinator R.C.E. 19607 — Dec. 1975 Date

DRAWING NUMBER S-7

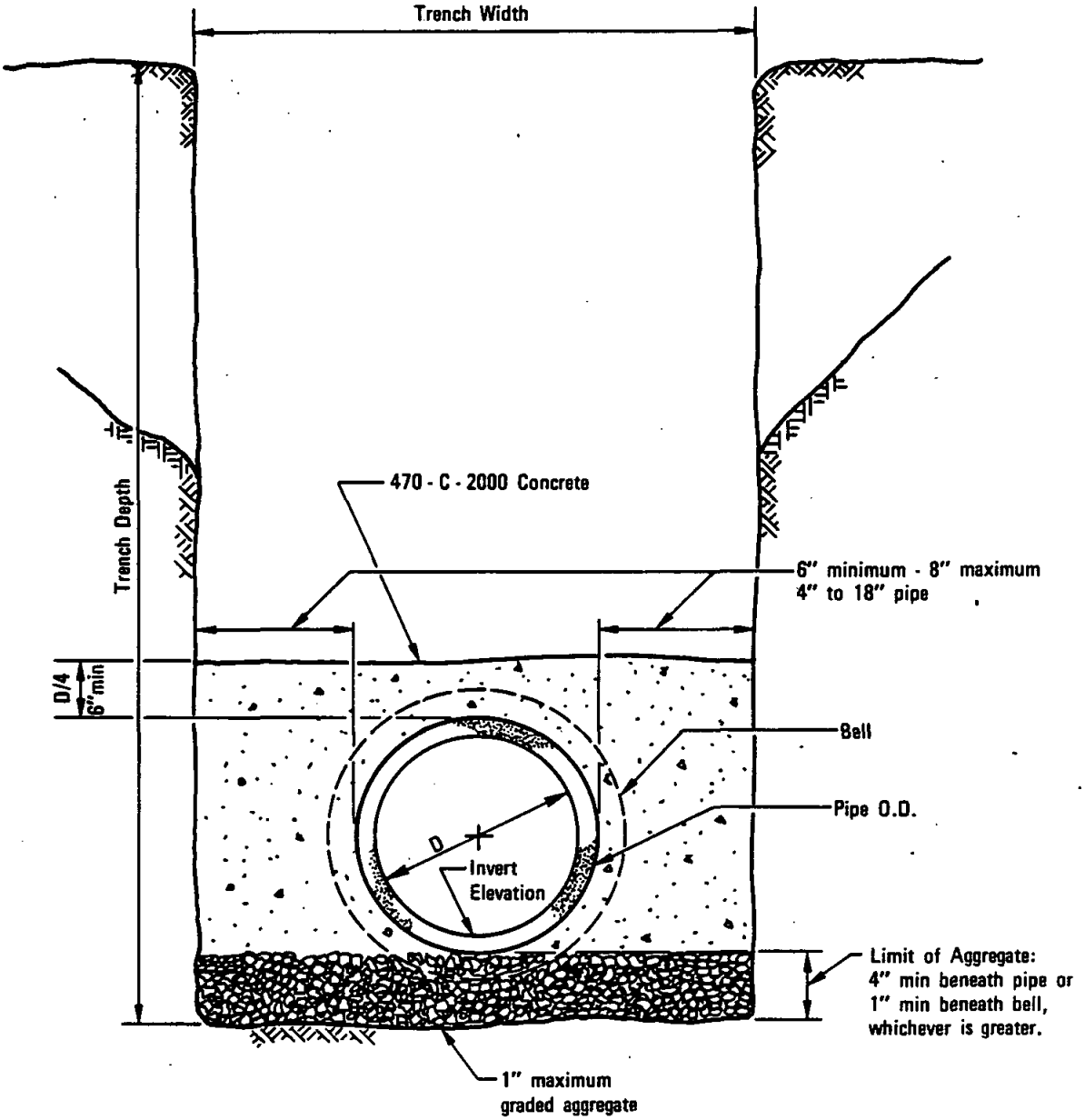

SECTION

LEGEND ON PLANS

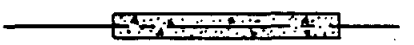

RECOMMENDED BY THE SAN DIEGO REGIONAL STANDARDS COMMITTEE

Coordinator R.C.E. 19807 Date Dec. 1975

DRAWING NUMBER S-8

SAN DIEGO REGIONAL STANDARD DRAWING

CONCRETE BACKFILL

Revision	By	Approved	Date

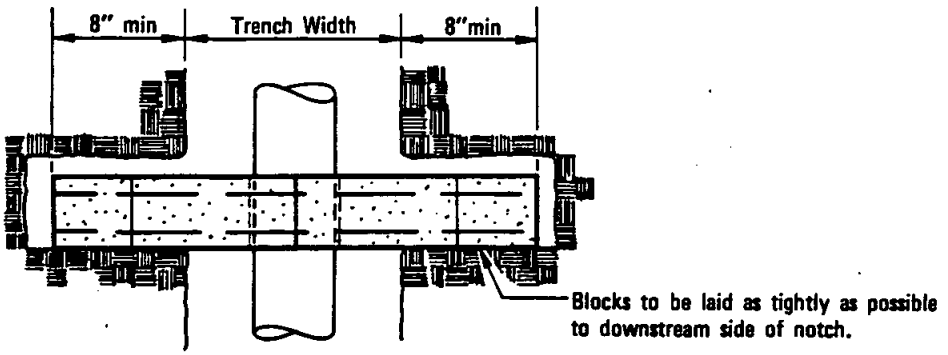

PLAN

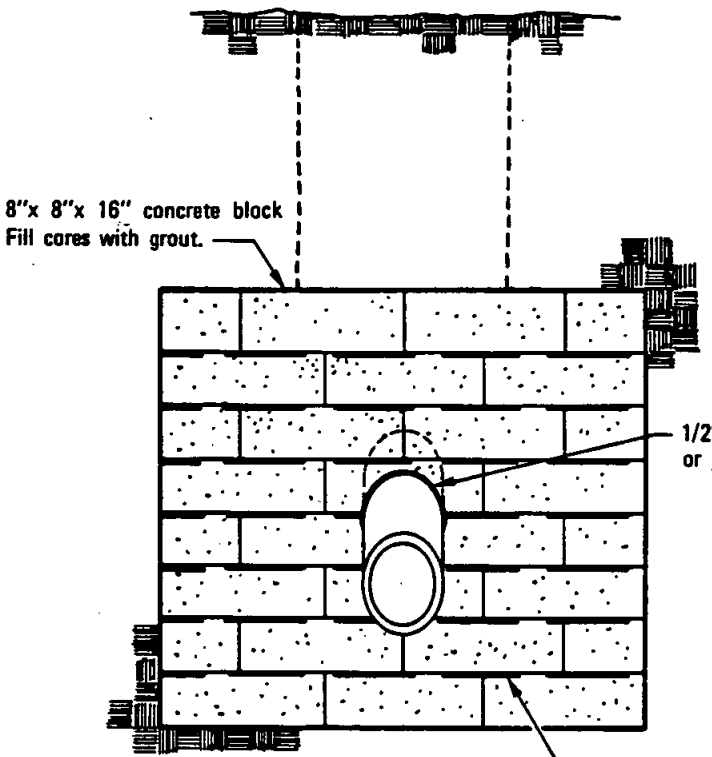

FRONT ELEVATION

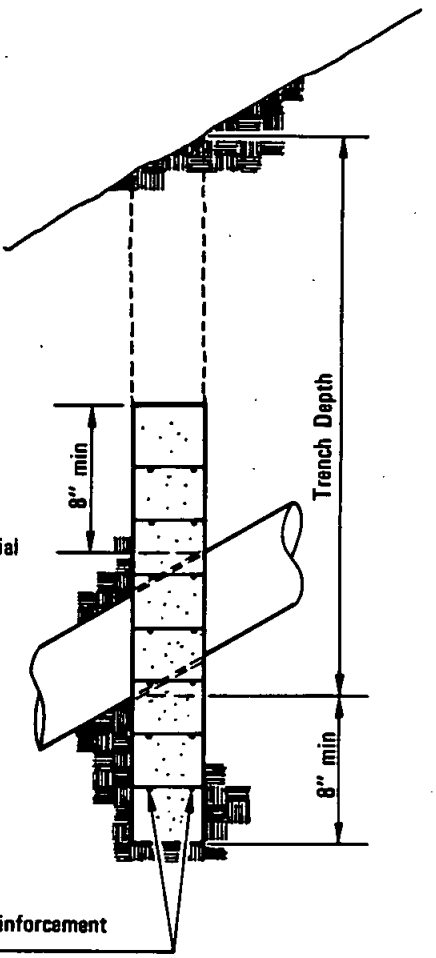

SIDE ELEVATION

LEGEND ON PLANS

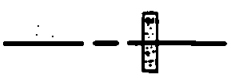

Revision	By	Approved	Date
Expan. jt.	TRP	M.B.	10-82

SAN DIEGO REGIONAL STANDARD DRAWING

CONCRETE ANCHOR

RECOMMENDED BY THE SAN DIEGO REGIONAL STANDARDS COMMITTEE

Coordinator R.C.E. 19807 — Dec. 1975 Date

DRAWING NUMBER S-9

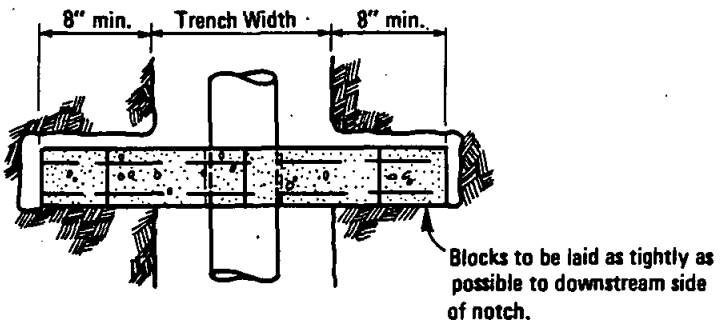

PLAN

NOTES

Type B:

1. No vertical joints permitted.
2. Horizontal joints must overlay by 2 corrugations.
3. Corrugations to run horizontally.
4. Front Elevation and Plan views similar to Type A.

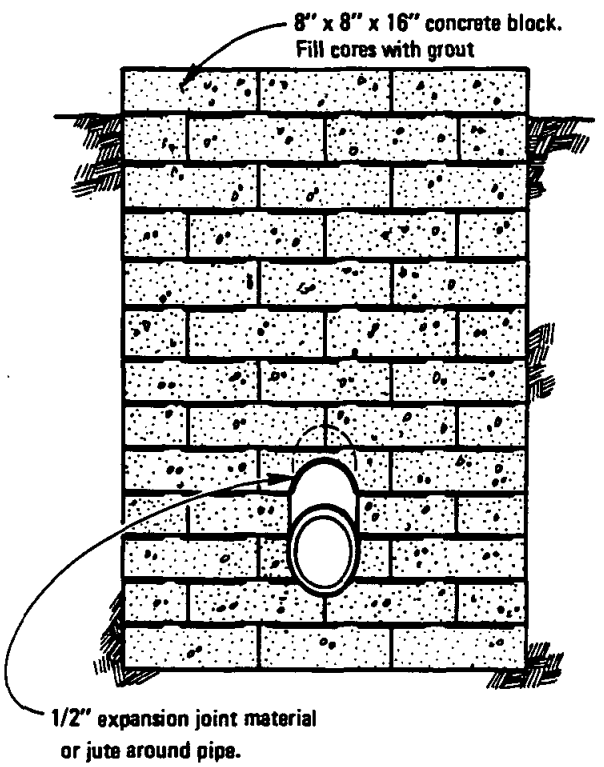

FRONT ELEVATION

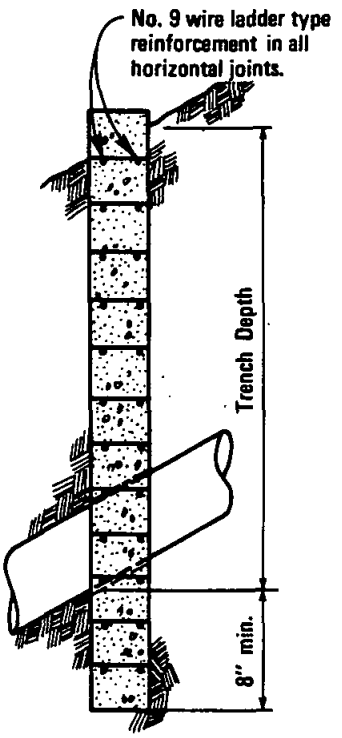

SIDE ELEVATION

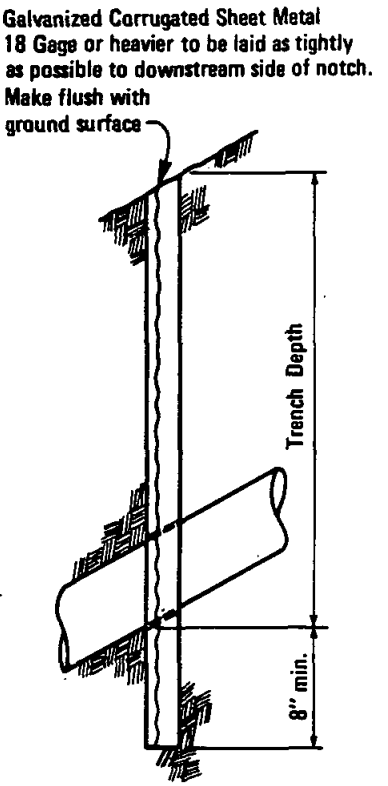

ELEVATION

TYPE A

TYPE B

LEGEND ON PLANS

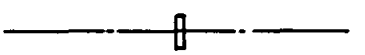

RECOMMENDED BY THE SAN DIEGO REGIONAL STANDARDS COMMITTEE Allan O. Kerchand Dec. 1975 Coordinator R.C.E. 19807 Date	SAN DIEGO REGIONAL STANDARD DRAWING	Revision	By	Approved	Date
		Type A	SC	D.S.	7-79
		Chg. notes	TRP	M.B.	10-82
DRAWING NUMBER S-10	CUTOFF WALL				

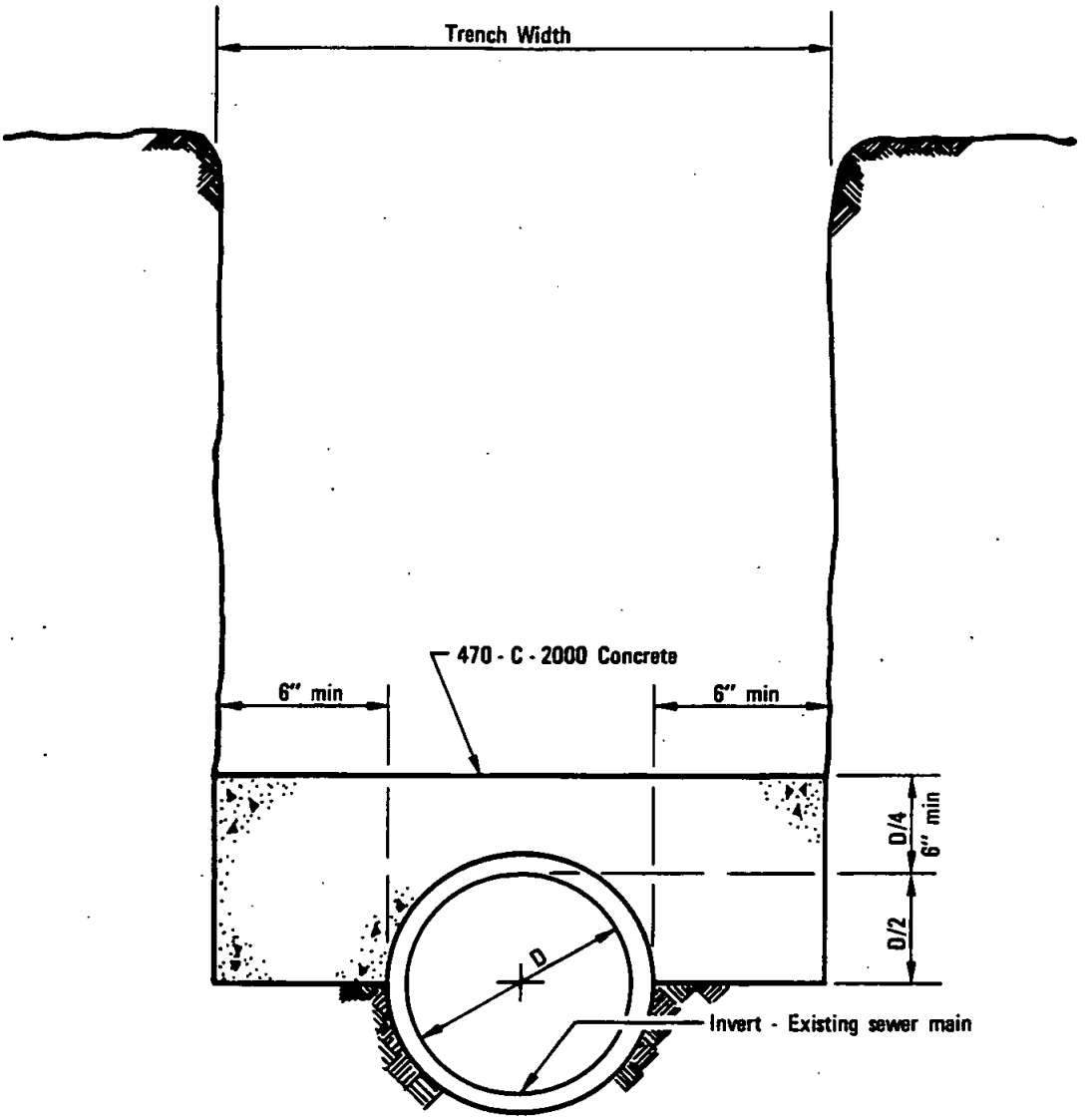

SECTION

LEGEND ON PLANS

Revision	By	Approved	Date

SAN DIEGO REGIONAL STANDARD DRAWING

CONCRETE PROTECTION FOR EXISTING SEWER PIPE

RECOMMENDED BY THE SAN DIEGO REGIONAL STANDARDS COMMITTEE

Coordinator R.C.E. 19807 — Dec. 1975 Date

DRAWING NUMBER S-11

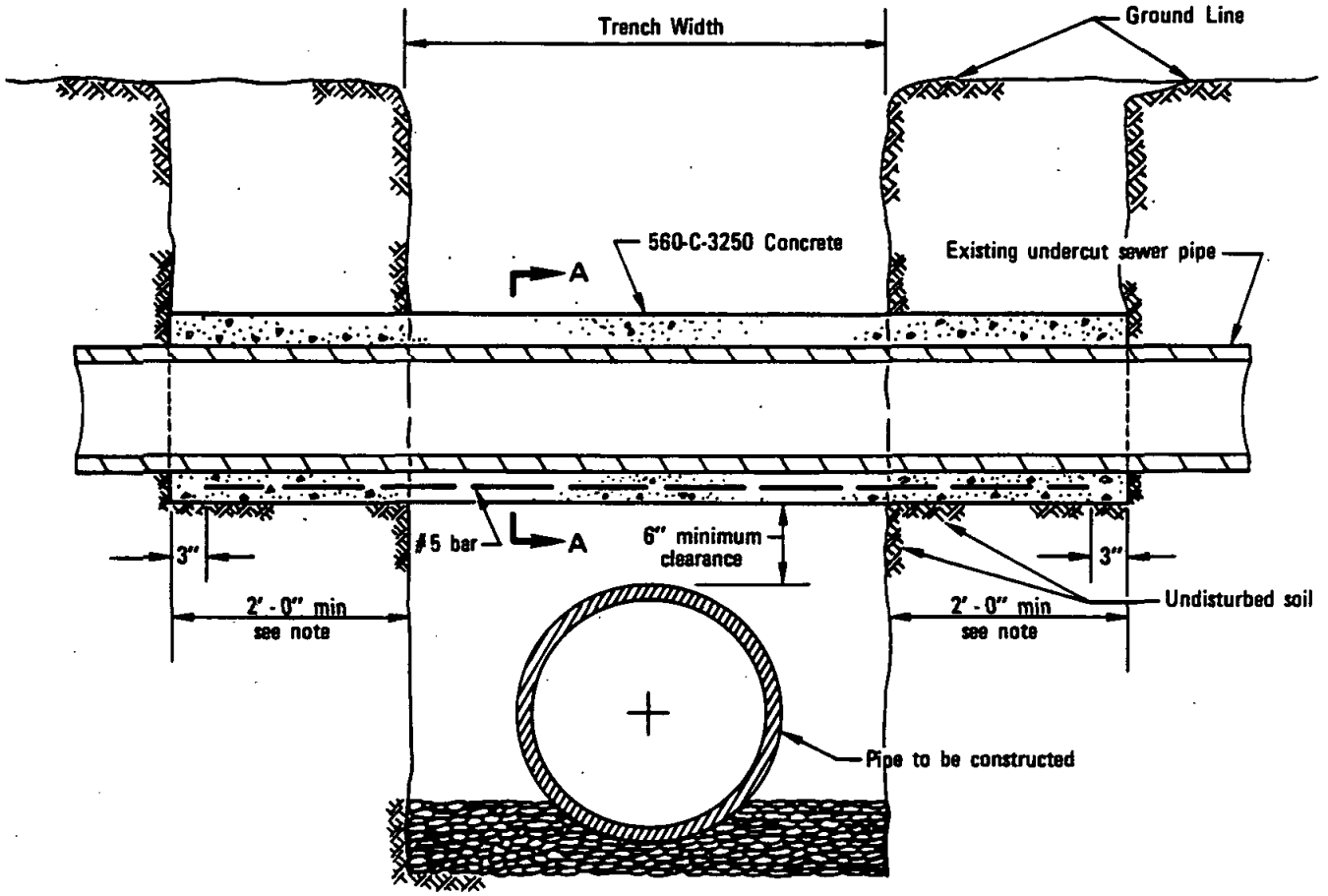

TYPICAL SECTION

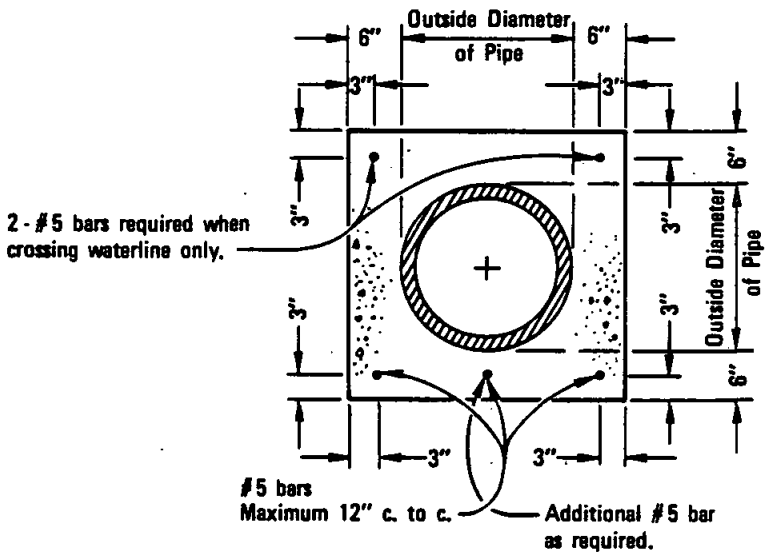

SECTION A–A

LEGEND ON PLANS

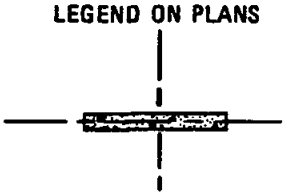

NOTE

For water line construction encasement shall extend to first joint beyond 2 feet at both sides of trench or to a distance of 4 feet, whichever is less.

RECOMMENDED BY THE SAN DIEGO REGIONAL STANDARDS COMMITTEE Coordinator R.C.E. 19807 Dec. 1975 Date	SAN DIEGO REGIONAL STANDARD DRAWING	Revision	By	Approved	Date
		Conc.	KC	M.B.	5-86
DRAWING NUMBER S-12	CONCRETE SUPPORT FOR UNDERCUT SEWER PIPE				

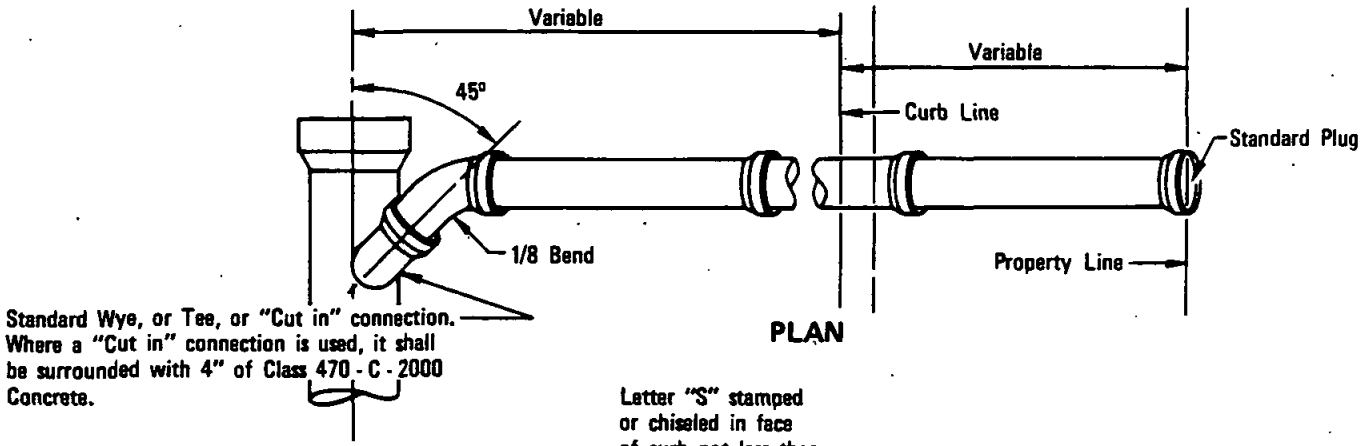

PLAN

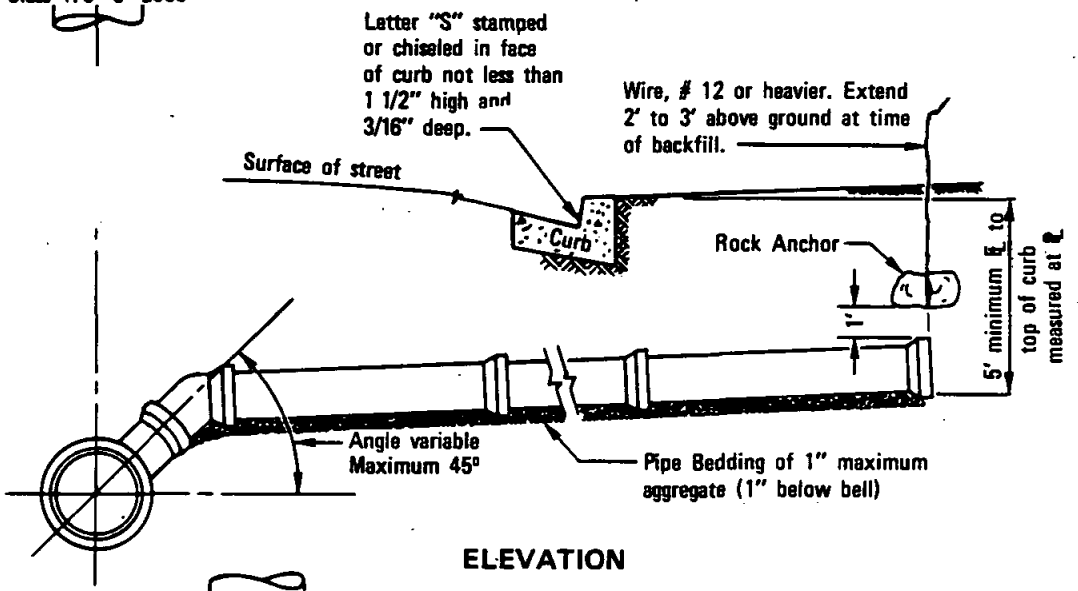

ELEVATION

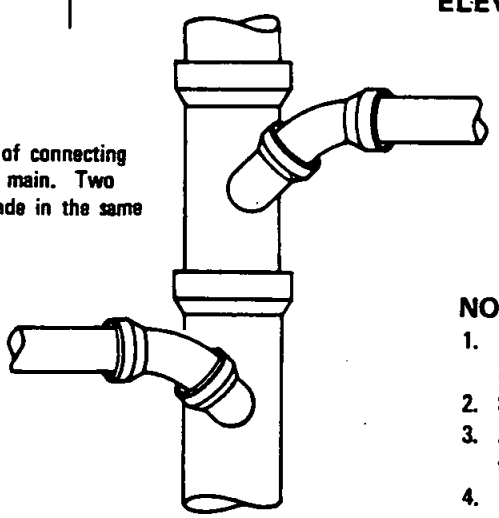

Detail showing the manner of connecting opposite laterals to a sewer main. Two connections shall not be made in the same length of pipe.

NOTES

1. In no case shall a lateral connect to the sewer main directly on top of the pipe.
2. Sewer laterals shall have a minimum slope of 2%.
3. All joints on sewer lateral pipe shall be compression type or approved solvent weld.
4. Lateral shall extend to property line unless otherwise shown on plans.

LEGEND ON PLANS

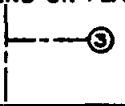

Revision	By	Approved	Date

SAN DIEGO REGIONAL STANDARD DRAWING

HOUSE CONNECTION (SEWER LATERAL)

RECOMMENDED BY THE SAN DIEGO REGIONAL STANDARDS COMMITTEE

Allan A. Kershaw — Dec. 1975
Coordinator R.C.E. 19807 — Date

DRAWING NUMBER S-13

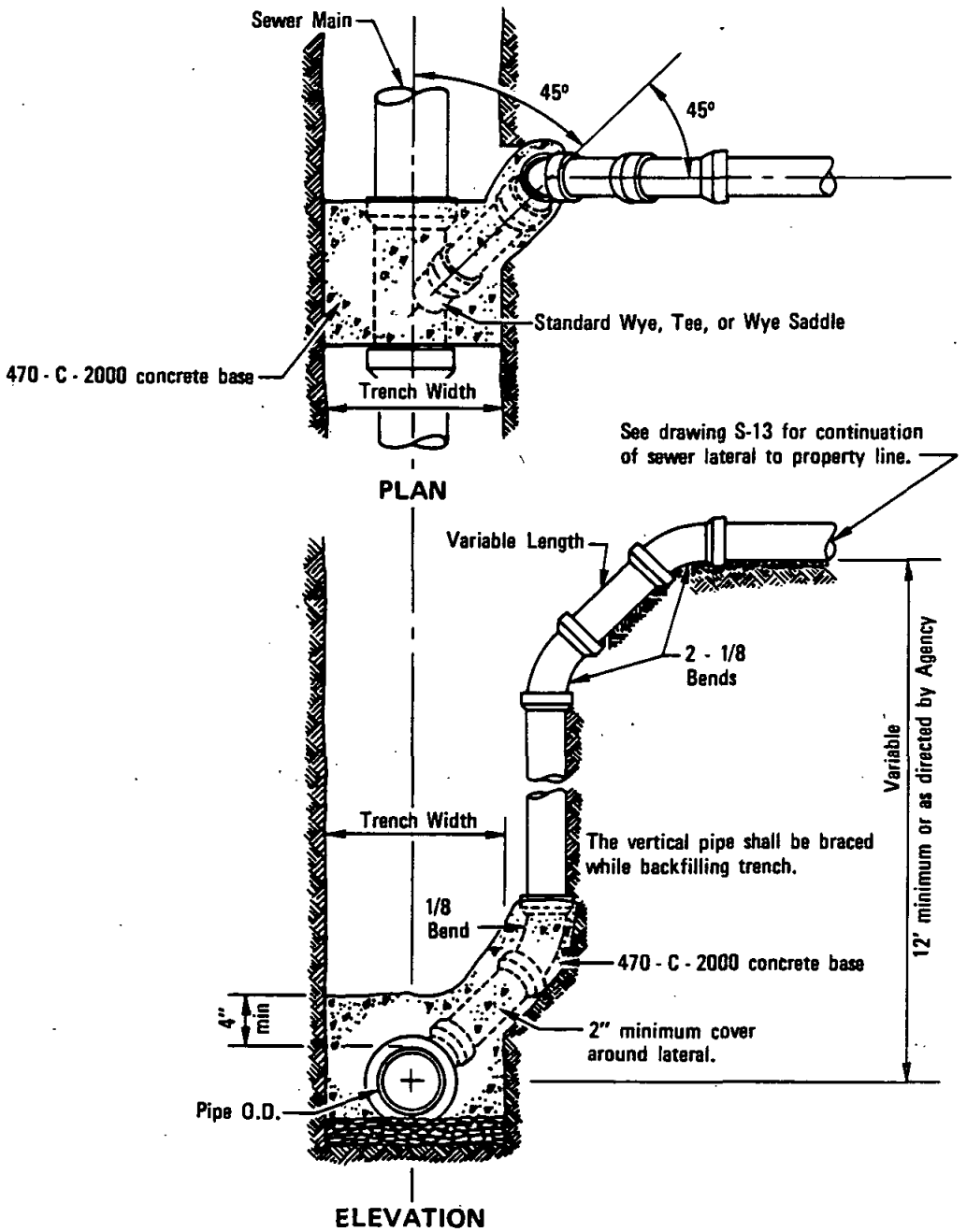

NOTE
All joints on sewer lateral pipe shall be compression type or approved solvent weld.

LEGEND ON PLANS

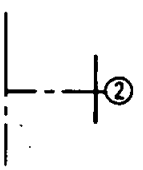

RECOMMENDED BY THE SAN DIEGO REGIONAL STANDARDS COMMITTEE Coordinator R.C.E. 19667 Date Dec. 1975	SAN DIEGO REGIONAL STANDARD DRAWING	Revision	By	Approved	Date
DRAWING NUMBER S-14	DEEP CUT HOUSE CONNECTION (SEWER LATERAL)				

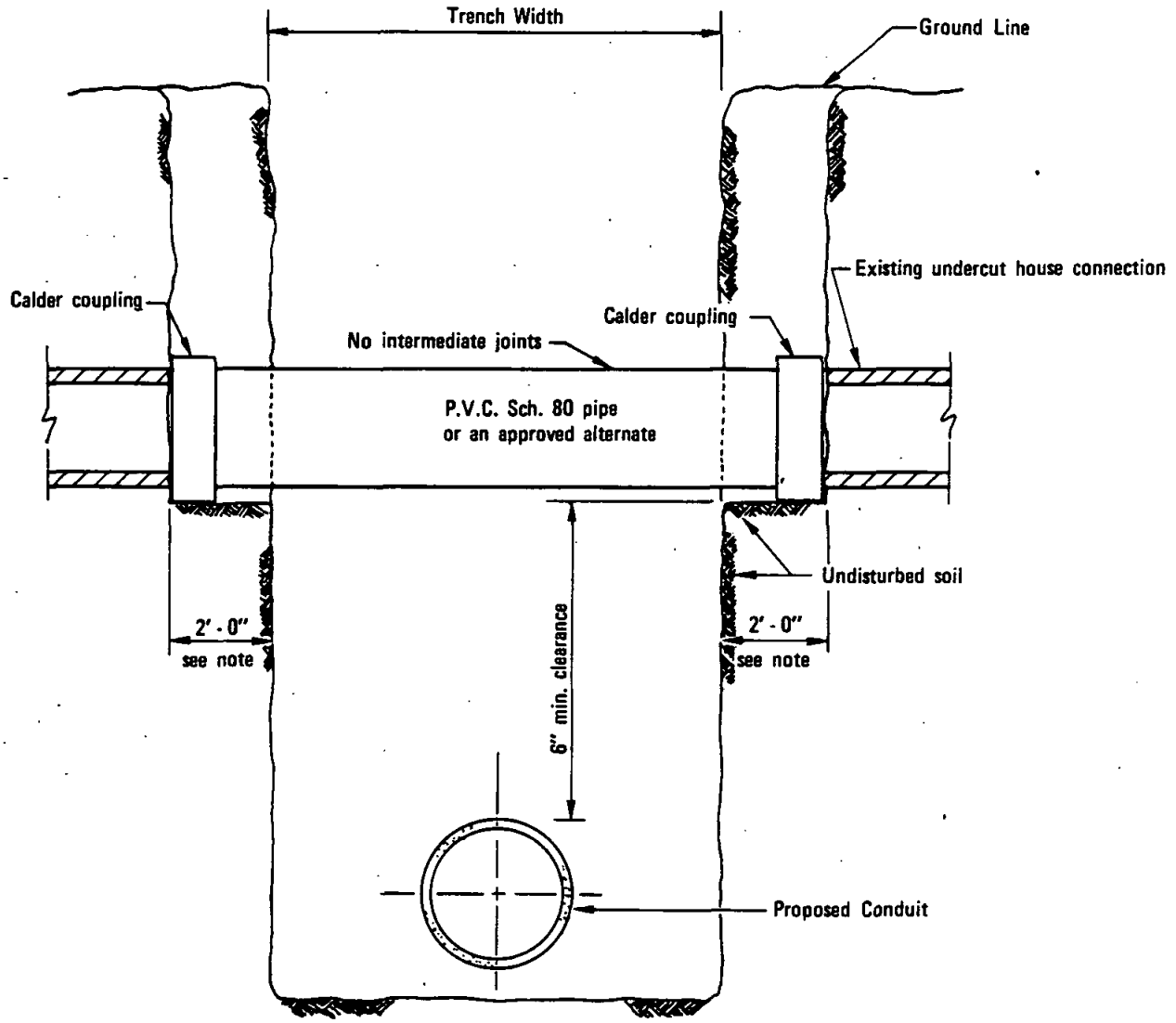

TYPICAL SECTION

NOTE

For water line construction repair pipe shall extend to first joint beyond 2 ft. at both sides of trench or to a distance of 4 ft., whichever is less.

Revision	By	Approved	Date

SAN DIEGO REGIONAL STANDARD DRAWING

HOUSE CONNECTION SEWER REPAIR

RECOMMENDED BY THE SAN DIEGO REGIONAL STANDARDS COMMITTEE

Allan O. Kaufman — Dec. 1975

Coordinator R.C.E. 19807 — Date

DRAWING NUMBER S-15

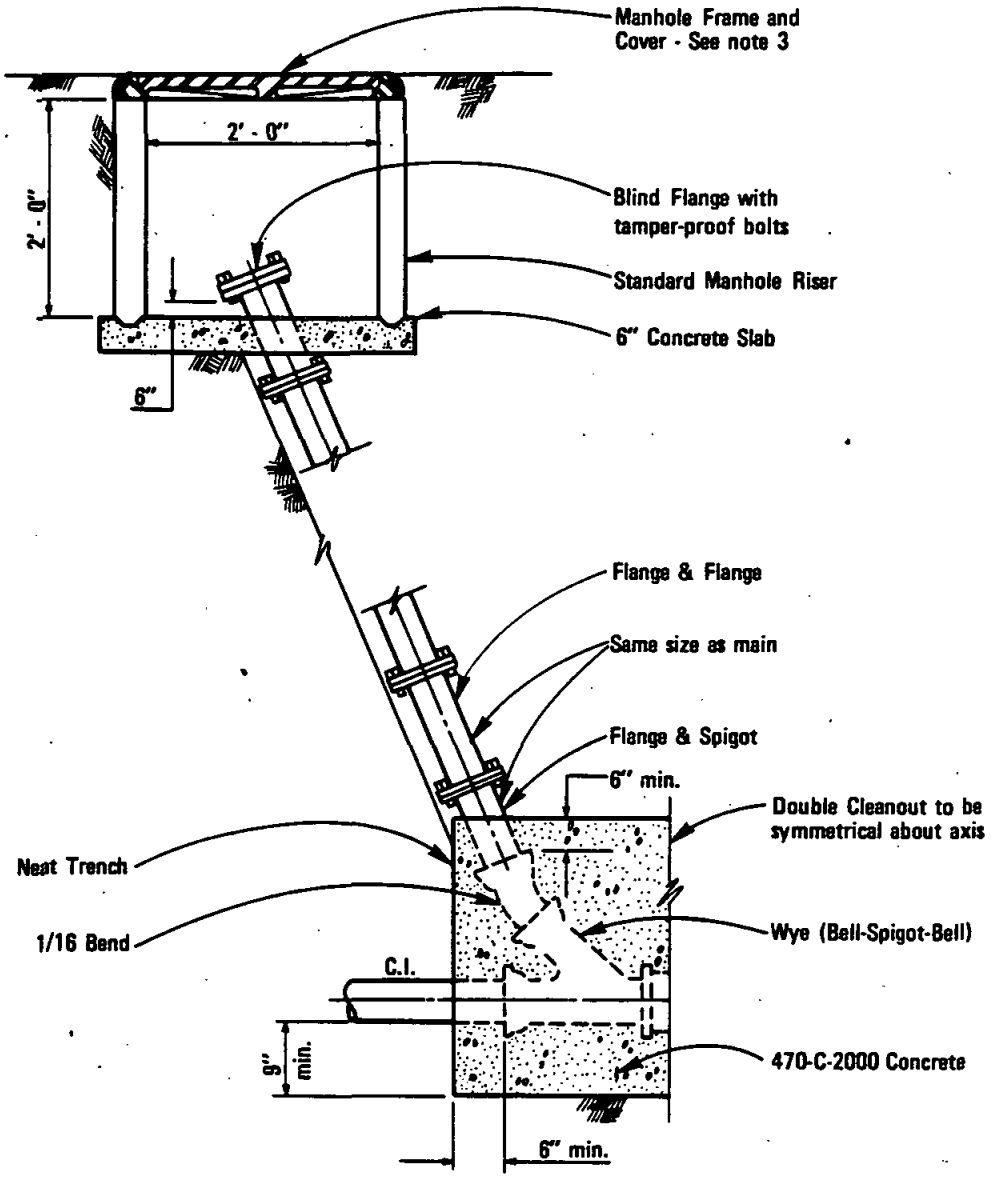

NOTES

1. Similar poly vinyl chloride components may be used in accordance with A.S.T.M. Standard Specification D-3033.
2. Concrete slab to be 560-C-3250
3. Use heavy duty manhole frame and cover, Std. Dwg. M-1, in areas subject to vehicular traffic; use light duty manhole frame and cover, Std. Dwg. M-2, in all other locations.

LEGEND ON PLANS

C.O.

RECOMMENDED BY THE SAN DIEGO REGIONAL STANDARDS COMMITTEE	SAN DIEGO REGIONAL STANDARD DRAWING	Revision	By	Approved	Date
Coordinator R.C.E. 25291 Date		Conc., slab		M.B.	5-86
DRAWING NUMBER S-16	CLEANOUT-SEWER FORCE MAIN				

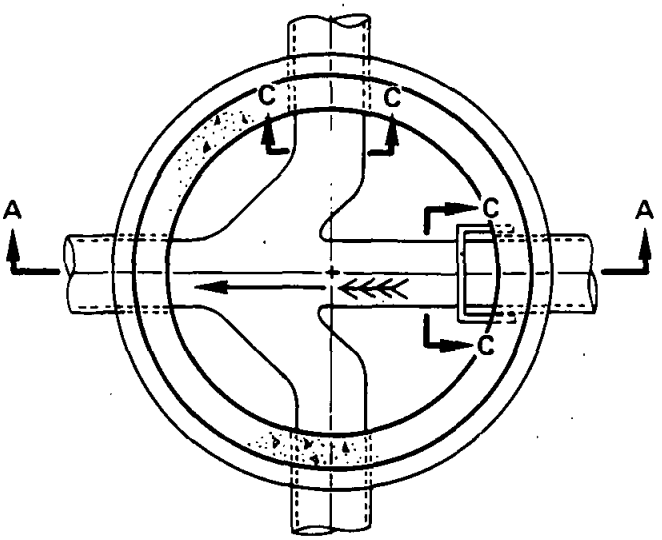

SECTION B–B

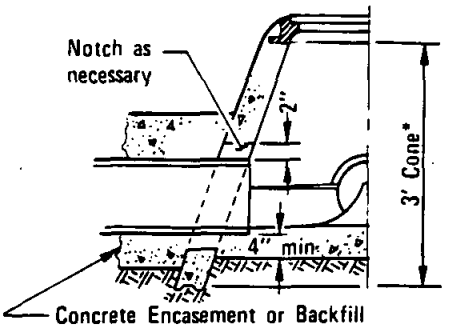

HALF SECTION SHALLOW MANHOLE

* Either Concentric or Eccentric Cone may be used.

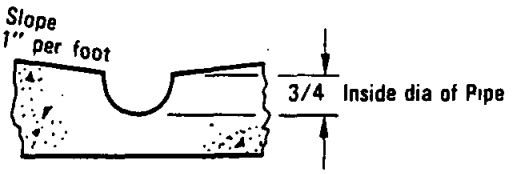

SECTION C–C

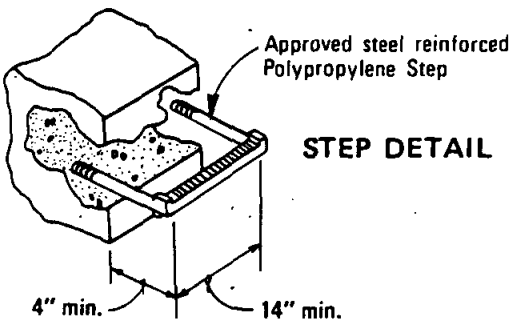

STEP DETAIL

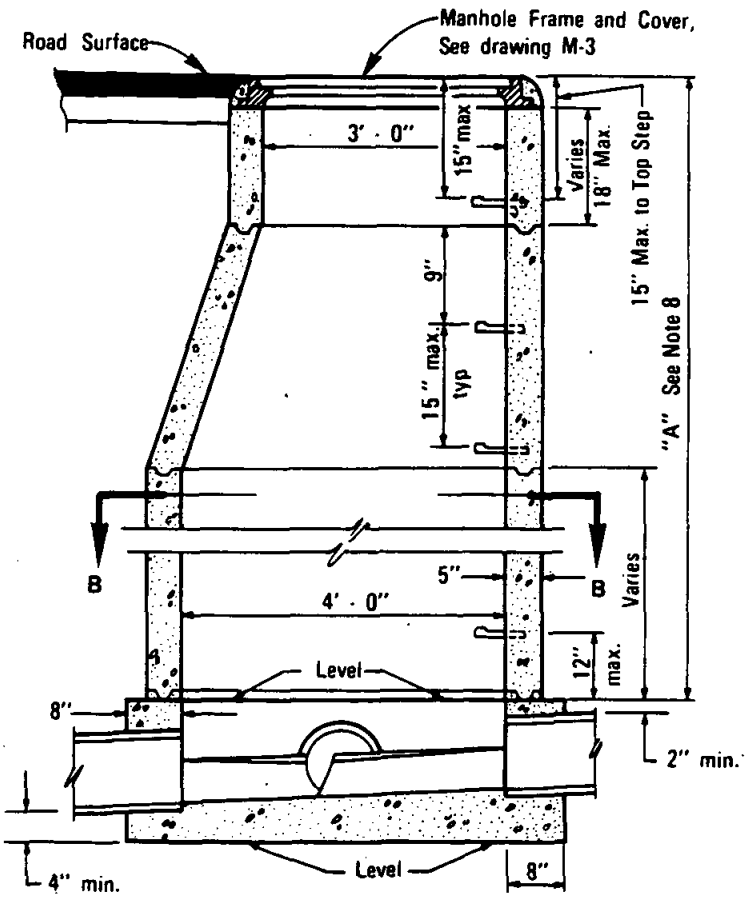

SECTION A -A

LEGEND ON PLANS

M.H. No. 2

NOTES

1. Manhole frame and all joints shall be set in Class "C" mortar.
2. All precast components shall be manufactured in accordance with ASTM C-478 except step spacing.
3. Vertical wall of cone shall be on the upstream side of the manhole.
4. Concrete base shall be 560-C-3250.
5. Approved water stop required for plastic pipe connections.
6. Flexible pipe joints shall be required within 12" of inside face of manhole. (except for plastic pipe)
7. Precast base permitted as approved by Agency.
8. Precast sections shall be used within dimension "A" as required, in order of preference listed:
   A. Cone (notched for pipe if dimension "A" is less than 3').
   B. 3" to 18" of 3' diameter grade rings/and/or risers.
   C. 4' diameter shaft variable height.
   D. Top step to be 15"Max: from top of frame and cover.
9. All patching within manhole base shall be epoxy mortar.
10. Prior approval of precast base is required by the Agency.

Revision		Approved	Date
Notes	TRP	M.B.	10/82
Conc.,Step		M.B.	5-86
NOTES		A.H.	8-88

SAN DIEGO REGIONAL STANDARD DRAWING

MANHOLE - 4' x 3' DIAMETER
(FOR 15" MAX. DIA. PIPE)

RECOMMENDED BY THE SAN DIEGO REGIONAL STANDARDS COMMITTEE

Coordinator R.C.E. 25291 Date

DRAWING NUMBER S-17

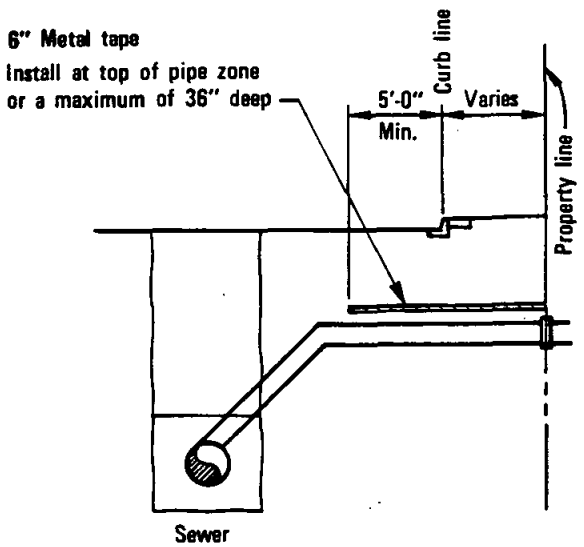

SECTION

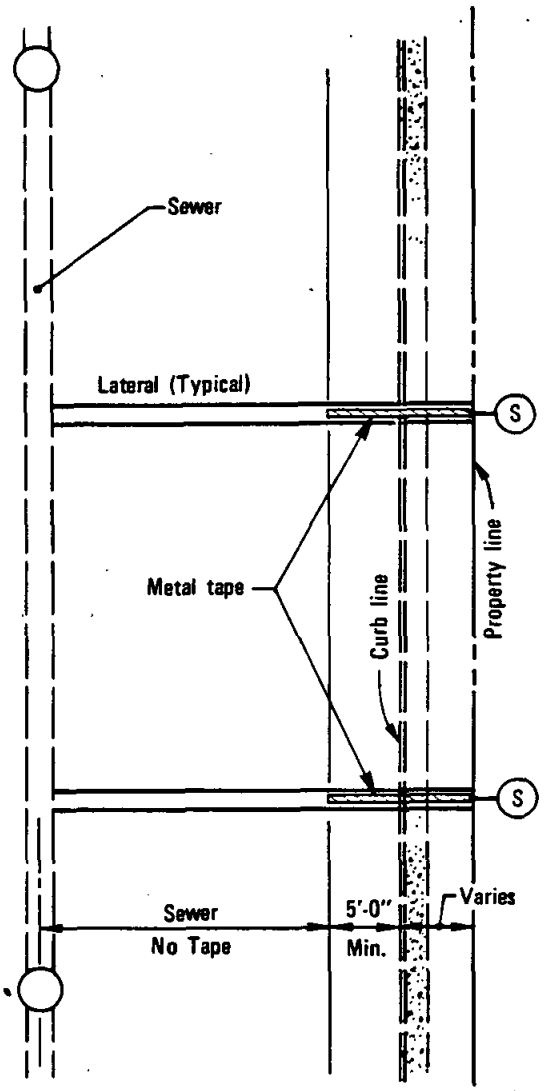

PLAN

Revision	By	Approved	Date

SAN DIEGO REGIONAL STANDARD DRAWING

METALLIC TAPE LOCATOR FOR NON-METALLIC SEWER PIPE

RECOMMENDED BY THE SAN DIEGO REGIONAL STANDARDS COMMITTEE

M. Bahmanyar 4-25-86

Coordinator R.C.E. C21133 Date

DRAWING NUMBER S-19

WATER SYSTEMS

NOTES

1. Service clamp and gasket required on 4" A.C. pipe.
2. Tap not permitted in milled sections of A.C. pipe.

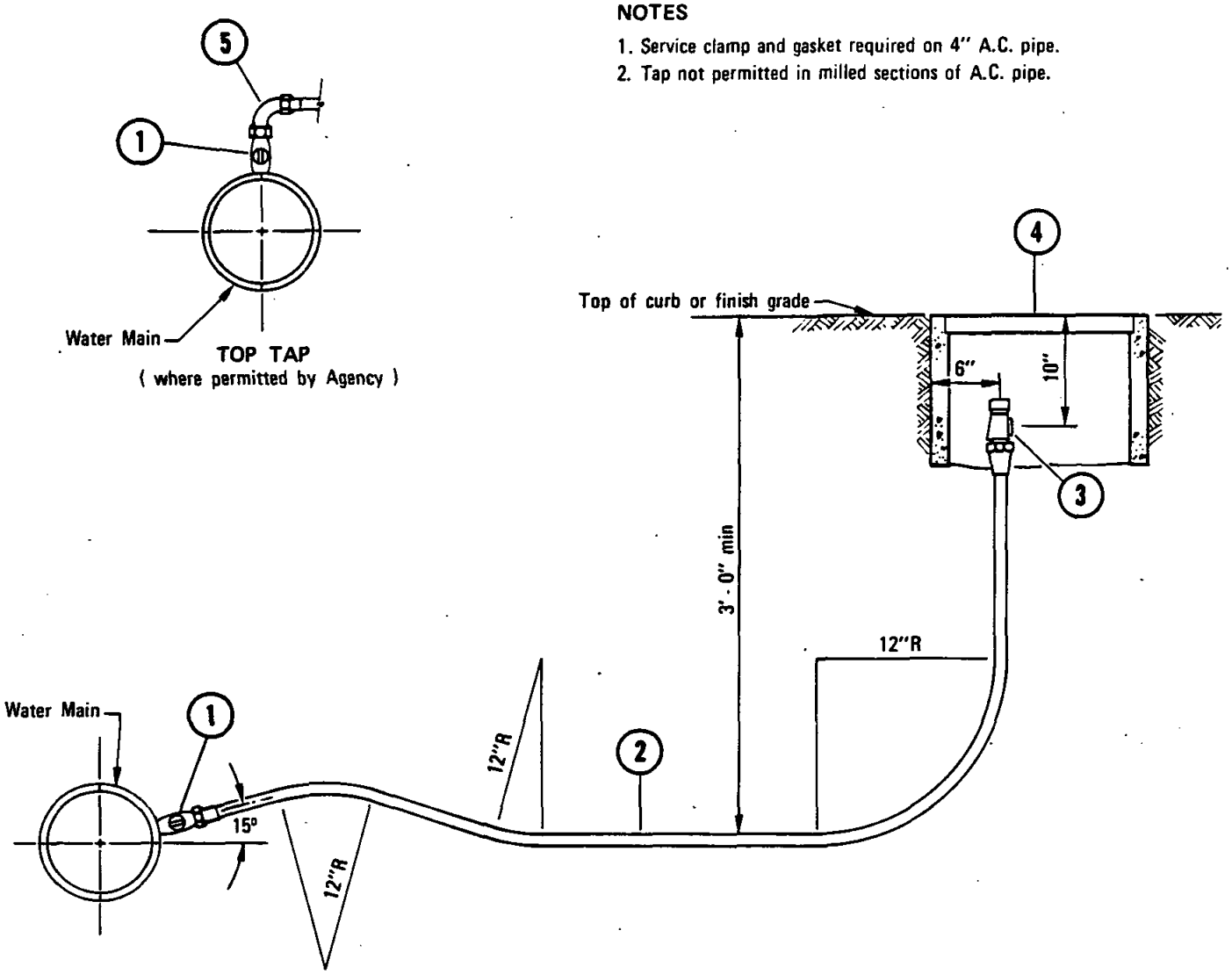

1. Bronze Corporation Stop (installed with key on side and open tap) and Adaptor as required by Agency.
   Note: On steel mains use clamp or weld on coupling as required by Agency.
   Install insulating bushing as required by Agency.
2. Copper Tubing or Plastic Pipe (no intermediate joints permitted without approval of the Agency).
3. Bronze Angle Service Stop with Locking Device and Meter Coupling attached.
4. Meter Box (see Standard Drawing W-15 for location).
5. 90° Ell

LEGEND ON PLANS

1" —— W

Revision	By	Approved	Date
Notes		D.S.	7-79

SAN DIEGO REGIONAL STANDARD DRAWING

1" WATER SERVICE

RECOMMENDED BY THE SAN DIEGO REGIONAL STANDARDS COMMITTEE

Allan A. Kenkel — Dec. 1975

Coordinator R.C.E. 19807 — Date

DRAWING NUMBER **W-1**

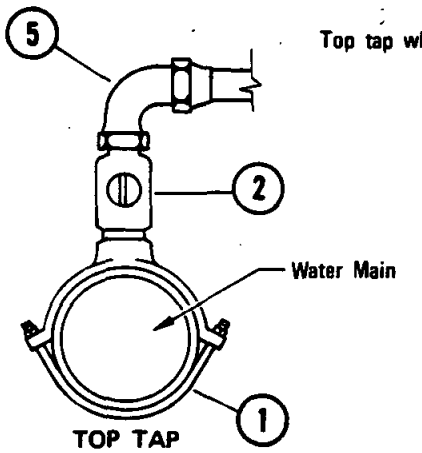

Top tap where permitted by Agency

TOP TAP
(where permitted by Agency)

NOTE
Silver Soldered Joints may be used where approved by the Agency.

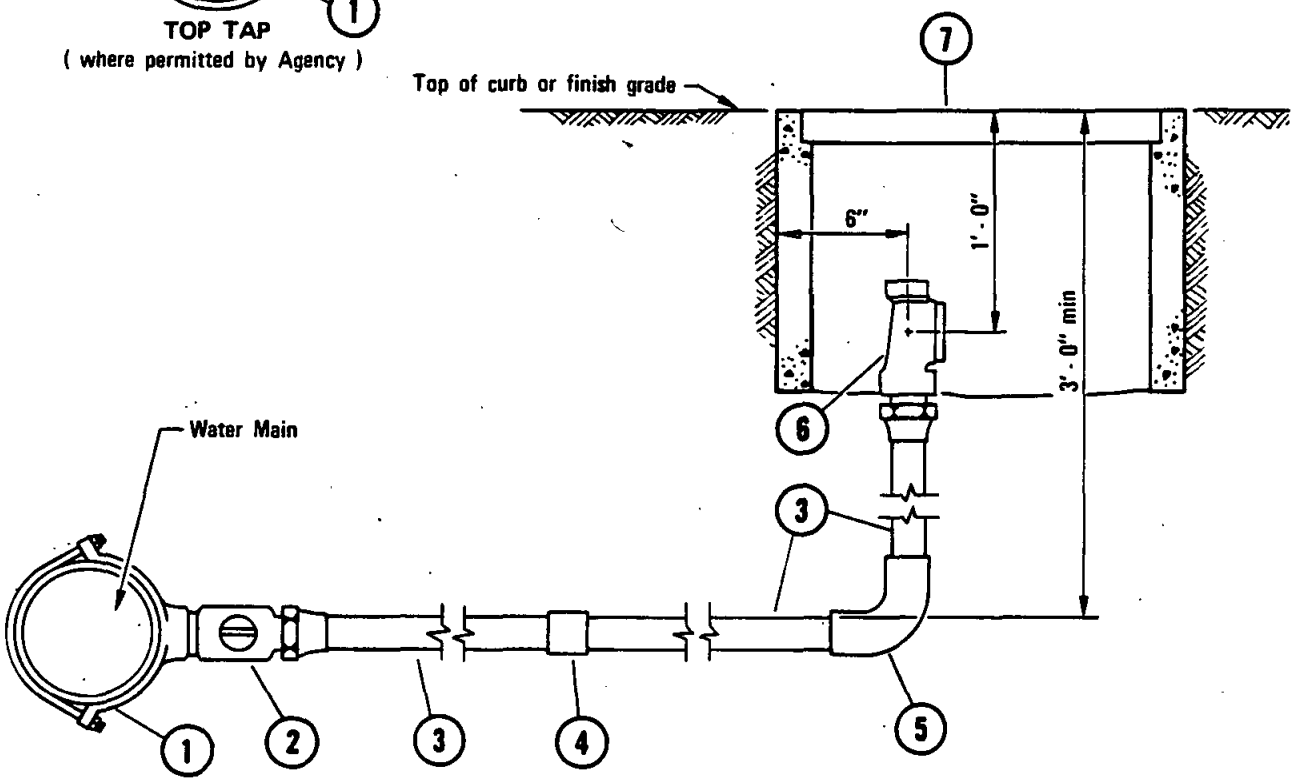

1. Bronze Service Clamp (double strap). On steel mains use clamp or weld on coupling as required by Agency. Install insulating bushing as required by Agency.
2. Bronze Corporation Stop (installed with key on side and open tap).
3. Copper Tubing or Plastic Pipe except where otherwise specified by the Agency.
4. Coupling as required by Agency when service is 20' or longer, except on Polyethylene Pipe.
5. 90° Ell
6. Bronze Angle Service Stop with Locking Device and adaptable to 1 1/2" and 2" Meter Flange.
7. Meter Box (see Standard Drawing W-15 for location).

LEGEND ON PLANS

2" (W)

RECOMMENDED BY THE SAN DIEGO REGIONAL STANDARDS COMMITTEE Coordinator R.C.E. 19807 — Dec. 1975 Date	SAN DIEGO REGIONAL STANDARD DRAWING	Revision	By	Approved	Date
		Notes		D.S.	7-79
DRAWING NUMBER W-2	1½" AND 2" WATER SERVICES				

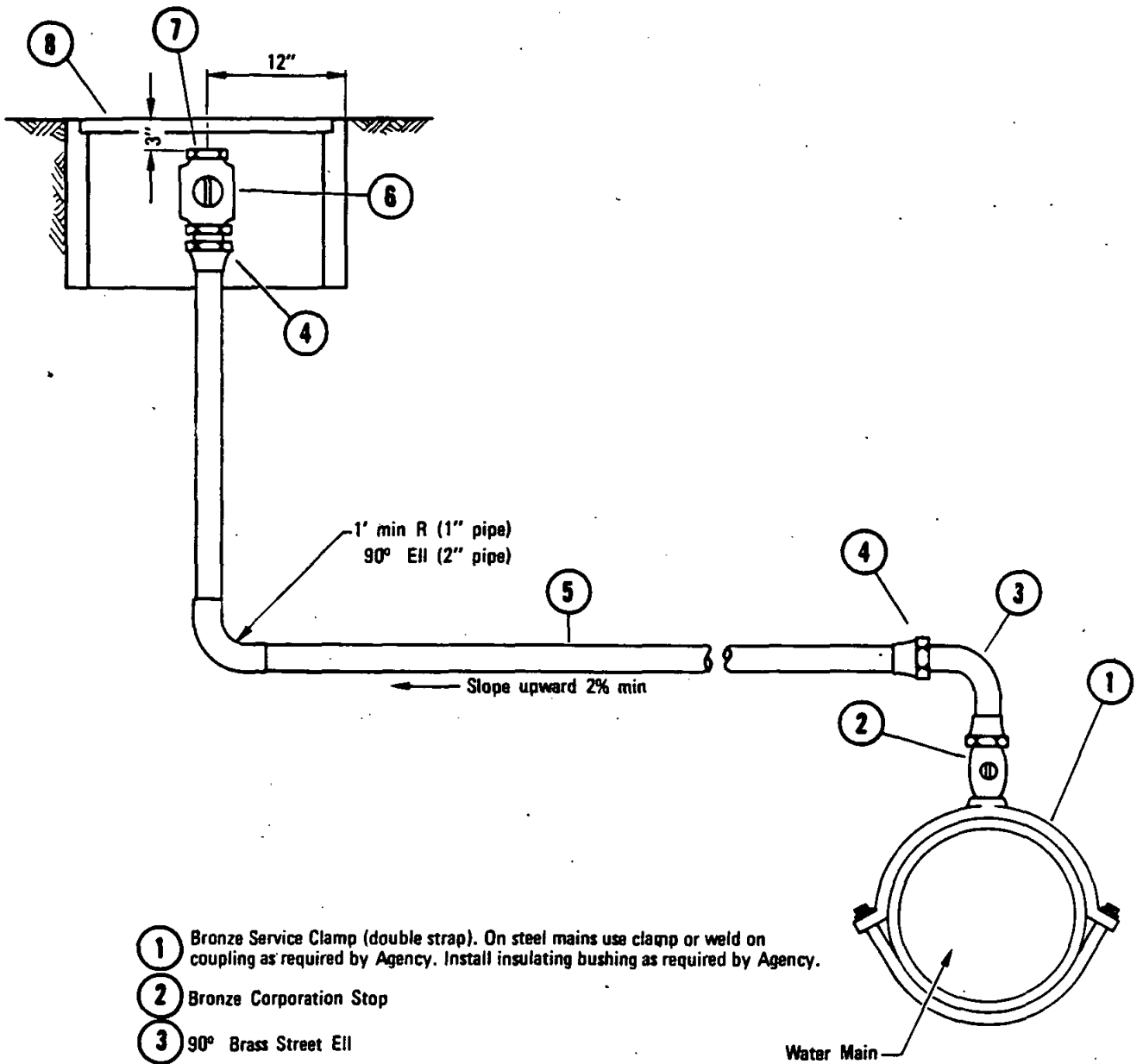

1. Bronze Service Clamp (double strap). On steel mains use clamp or weld on coupling as required by Agency. Install insulating bushing as required by Agency.
2. Bronze Corporation Stop
3. 90° Brass Street Ell
4. Pipe to Tubing Adaptor
5. Copper Tubing
6. Ball Valve
7. Brass Plug
8. Meter Box (see Standard Drawing W-15 for location).

LEGEND ON PLANS

Revision	By	Approved	Date
Notes		D.S.	7-79

SAN DIEGO REGIONAL STANDARD DRAWING

1" AND 2" MANUAL AIR RELEASES

RECOMMENDED BY THE SAN DIEGO REGIONAL STANDARDS COMMITTEE

Coordinator R.C.E. 19867 Date Dec. 1975

DRAWING NUMBER W-3

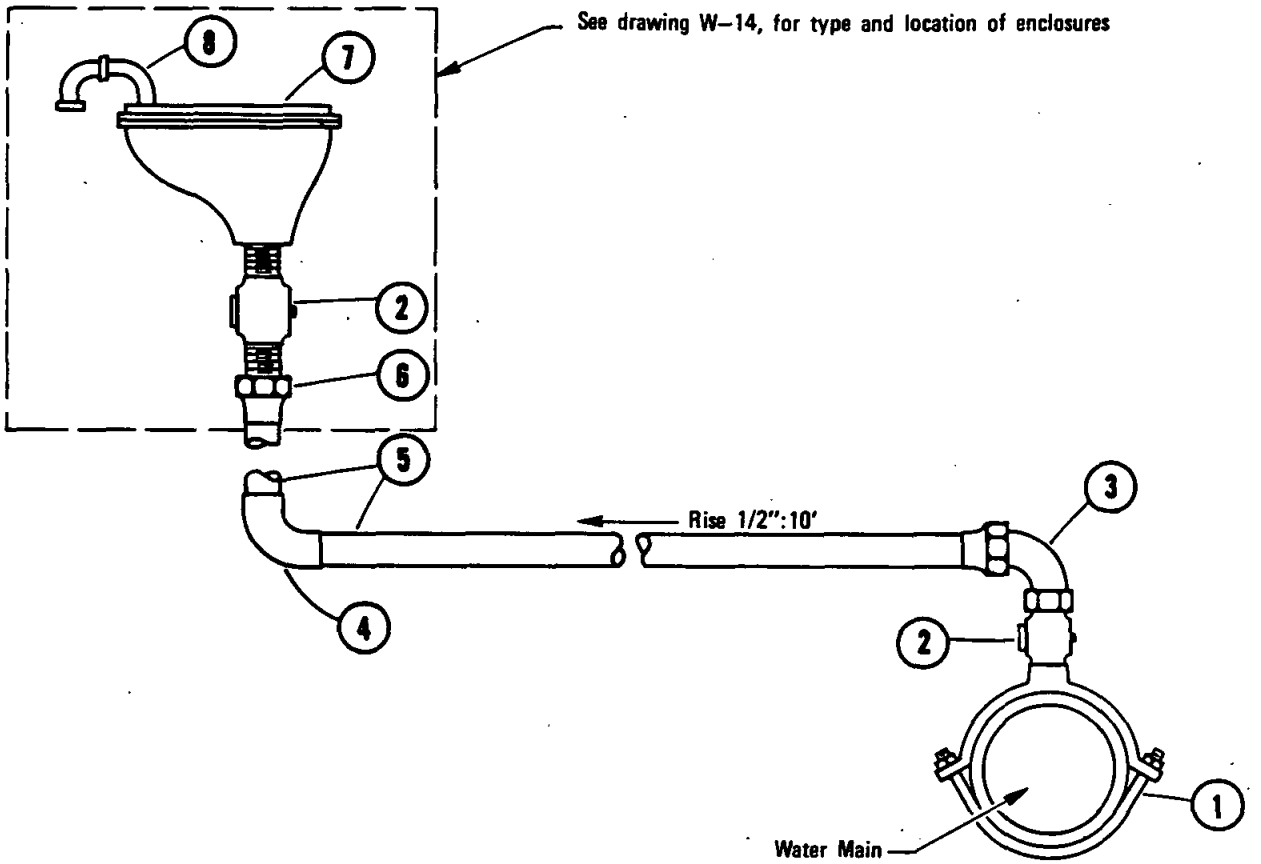

1. Double Strap Bronze Service Clamp. On steel mains use clamp or weld on coupling as required by Agency. Install insulating bushing as required by Agency.
2. Corporation Stop
3. Pipe x Tubing 90° Ell
4. 90° Sweat Ell
5. Copper Tubing
6. Female Adaptor
7. Air and Vacuum Valve
8. 2-90° Ells (not required in above metal ground enclosures).

LEGEND ON PLANS

RECOMMENDED BY THE SAN DIEGO REGIONAL STANDARDS COMMITTEE Allan O. Kaufman Dec. 1975 Coordinator R.C.E. 19807 Date	SAN DIEGO REGIONAL STANDARD DRAWING	Revision	By	Approved	Date
		Notes	JC	O.S.	2-79
DRAWING NUMBER W-4	1" AND 2" AIR AND VACUUM VALVES				

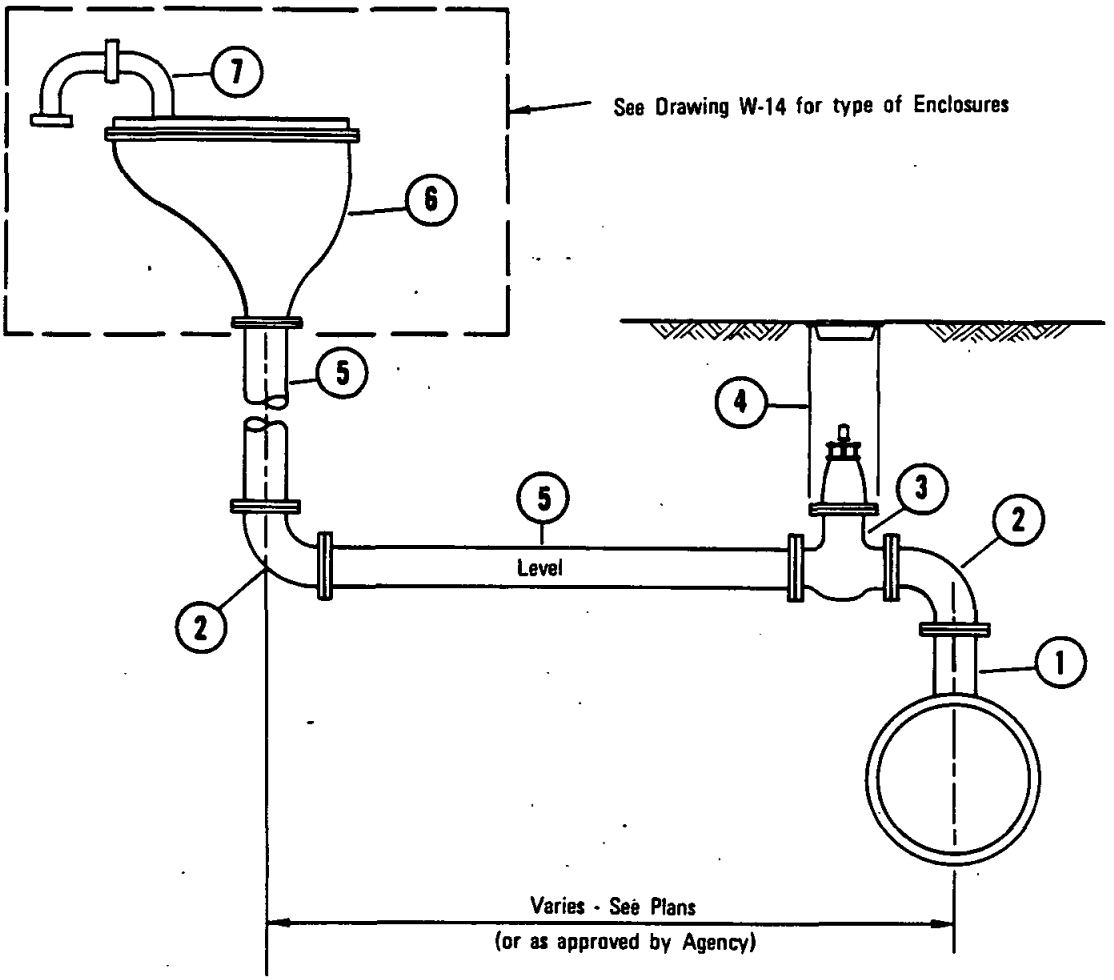

1. Flanged Outlet, Cement Lined and Coated Steel
2. Flanged, 90° Ell, Cement Lined and Coated Steel
3. Valve
4. Valve Well and Cap (see Standard Drawing W-12)
5. Steel Pipe, Cement Lined and Coated
6. Air and Vacuum Valve
7. 2 90° Ells (not required with above ground metal enclosures)

LEGEND ON PLANS

Revision	By	Approved	Date

SAN DIEGO REGIONAL STANDARD DRAWING

4" AND 6" AIR AND VACUUM VALVES

RECOMMENDED BY THE SAN DIEGO REGIONAL STANDARDS COMMITTEE

Allan A. Kershaw — Dec. 1975

Coordinator R.C.E. 19807 — Date

DRAWING NUMBER **W-5**

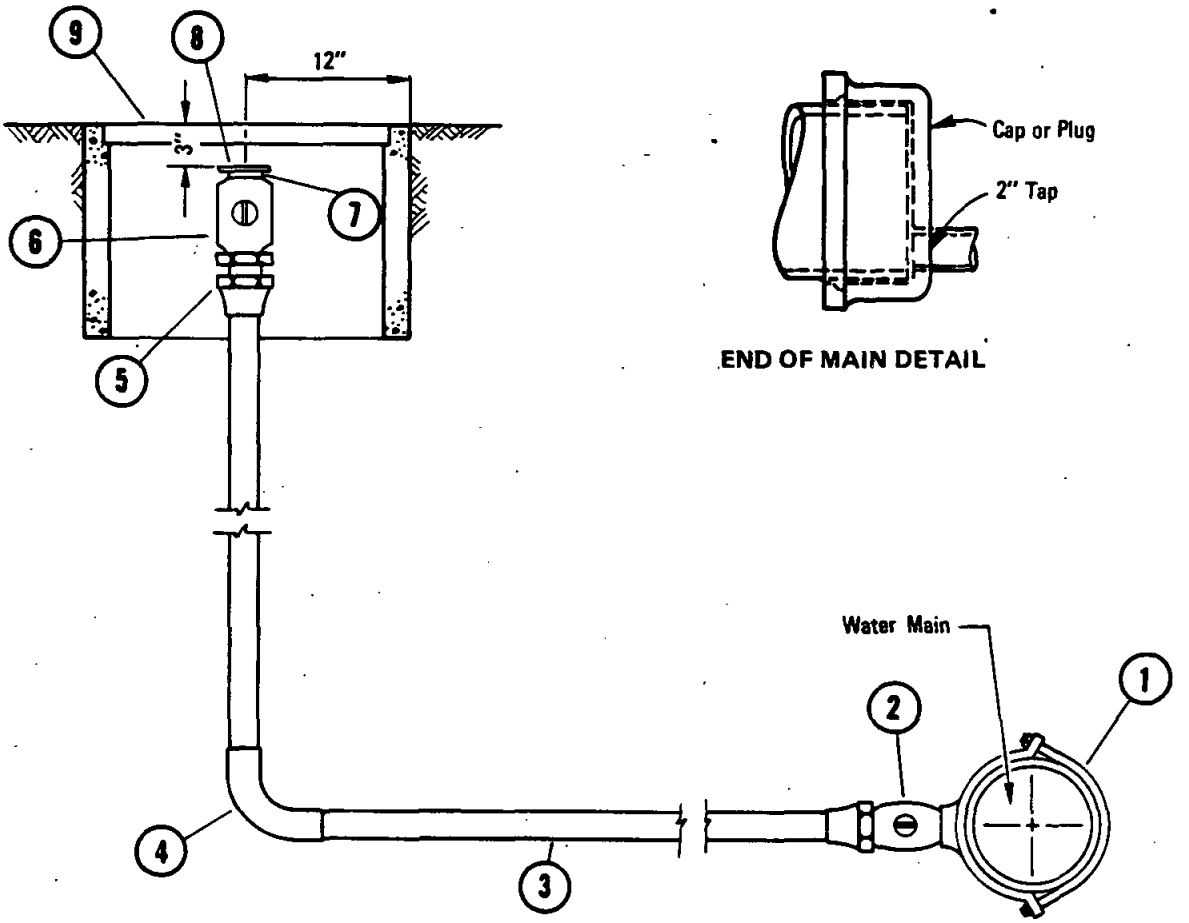

1. Bronze Service Clamp (double strap). On steel mains use clamp or weld on coupling as required by Agency. Install insulating bushing as required by Agency.
2. Bronze Corporation Stop (installed with key on side and open tap) and adaptor as required by Agency.
3. Copper Tubing
4. 90° Ell
5. Pipe to Tubing Adaptor
6. Ball Valve
7. Brass 2" Iron Pipe Thread x 2 1/2" Hose Pipe Thread Adaptor.
8. 2 1/2" Hose Cap with chain, Brass.
9. Meter Box (see Standard Drawing W-15 for location).

LEGEND ON PLANS

RECOMMENDED BY THE SAN DIEGO REGIONAL STANDARDS COMMITTEE

Allan A. Kershaw — Dec. 1975
Coordinator R.C.E. 19807 — Date

DRAWING NUMBER **W-6**

SAN DIEGO REGIONAL STANDARD DRAWING

2" BLOW-OFF ASSEMBLY - TYPE A

Revision	By	Approved	Date
Detail	[illegible]	D.S.	7-79

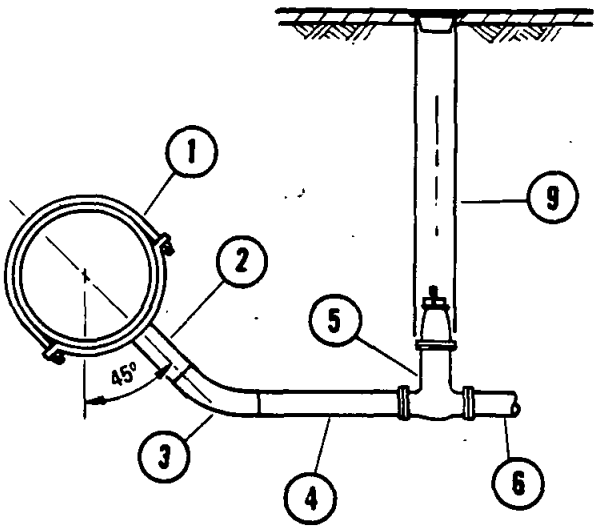

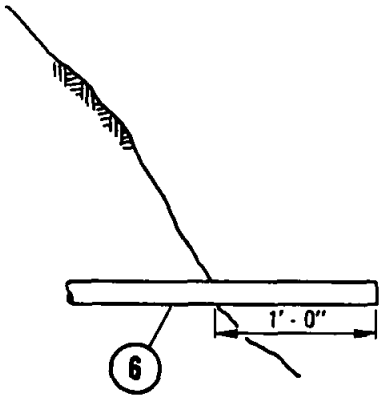

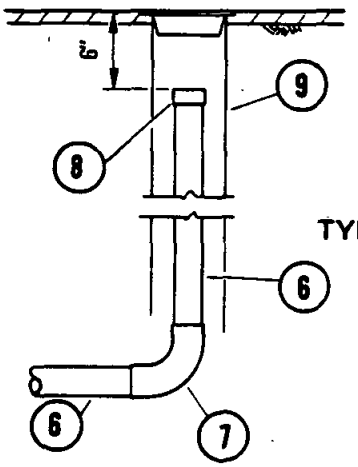

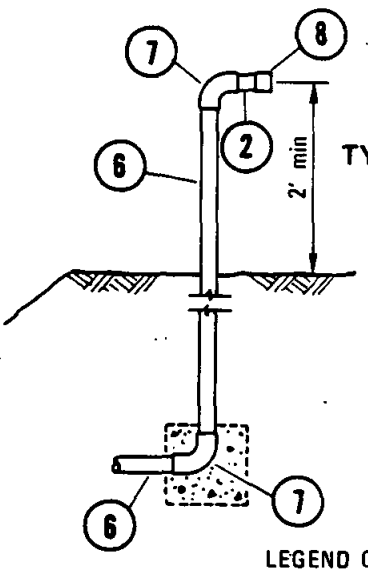

1. Bronze Service Clamp (double strap) or Pretapped Coupling. On steel mains use clamp or weld on coupling as required by Agency. Install insulating bushing as requried by Agency.
2. 2" Nipple (2"x 3")
3. 45° Ell
4. 2" Nipple (2"x 6")
5. 2" Valve
6. 2" Pipe
7. 90° Ell
8. 2" Threaded Cap
9. Valve Well Installation, See Standard Drawing W-12

NOTES

1. Type of installation and materials to be specified by Agency.
2. See Standard Drawing W-6 for end of main detail.

LEGEND ON PLANS

Revision	By	Approved	Date
Notes	SC	DS	7-79

SAN DIEGO REGIONAL STANDARD DRAWING

2" BLOW-OFF ASSEMBLIES TYPES B, C AND D

RECOMMENDED BY THE SAN DIEGO REGIONAL STANDARDS COMMITTEE

Allan A. Kershaw — Dec. 1975
Coordinator R.C.E. 19807 — Date

DRAWING NUMBER **W-7**

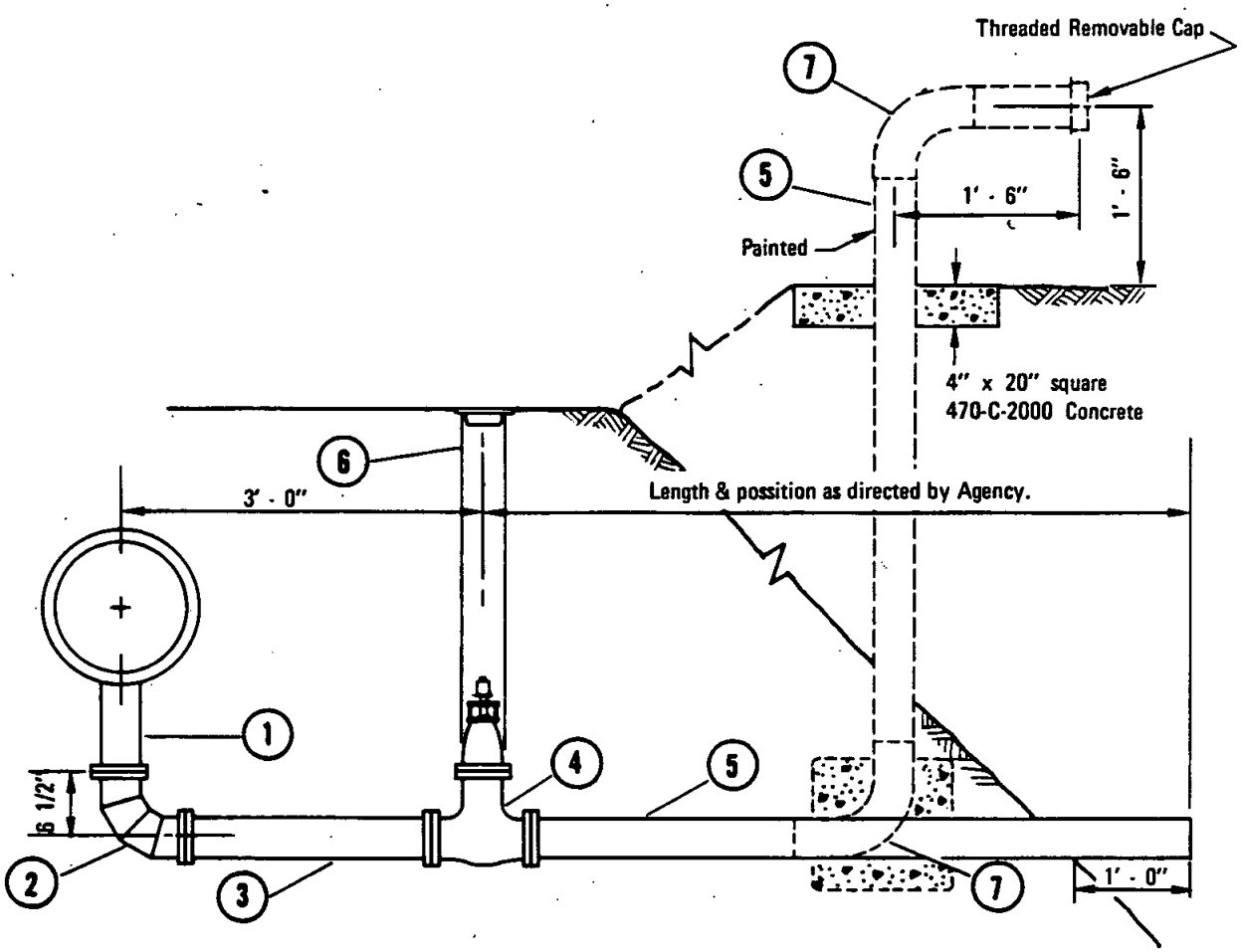

1. Flanged Tee or Welded Saddle.
2. Short Radius 90° Flanged Bend, Cement Lined and Coated.
3. Steel Pipe, Cement Lined and Coated.
4. Flanged Valve.
5. Steel Pipe (or P. V. C. Schedule 80 Pipe Where Permitted by Agency).
6. Valve Well (See Standard Drawing W-12).
7. 90° Bend (Same Material as Item 5).

LEGEND ON PLANS

RECOMMENDED BY THE SAN DIEGO REGIONAL STANDARDS COMMITTEE Coordinator R.C.E. 19807 — Dec. 1975 Date	SAN DIEGO REGIONAL STANDARD DRAWING	Revision	By	Approved	Date
DRAWING NUMBER W-8	4" AND 6" BLOW-OFF ASSEMBLIES TYPE A				

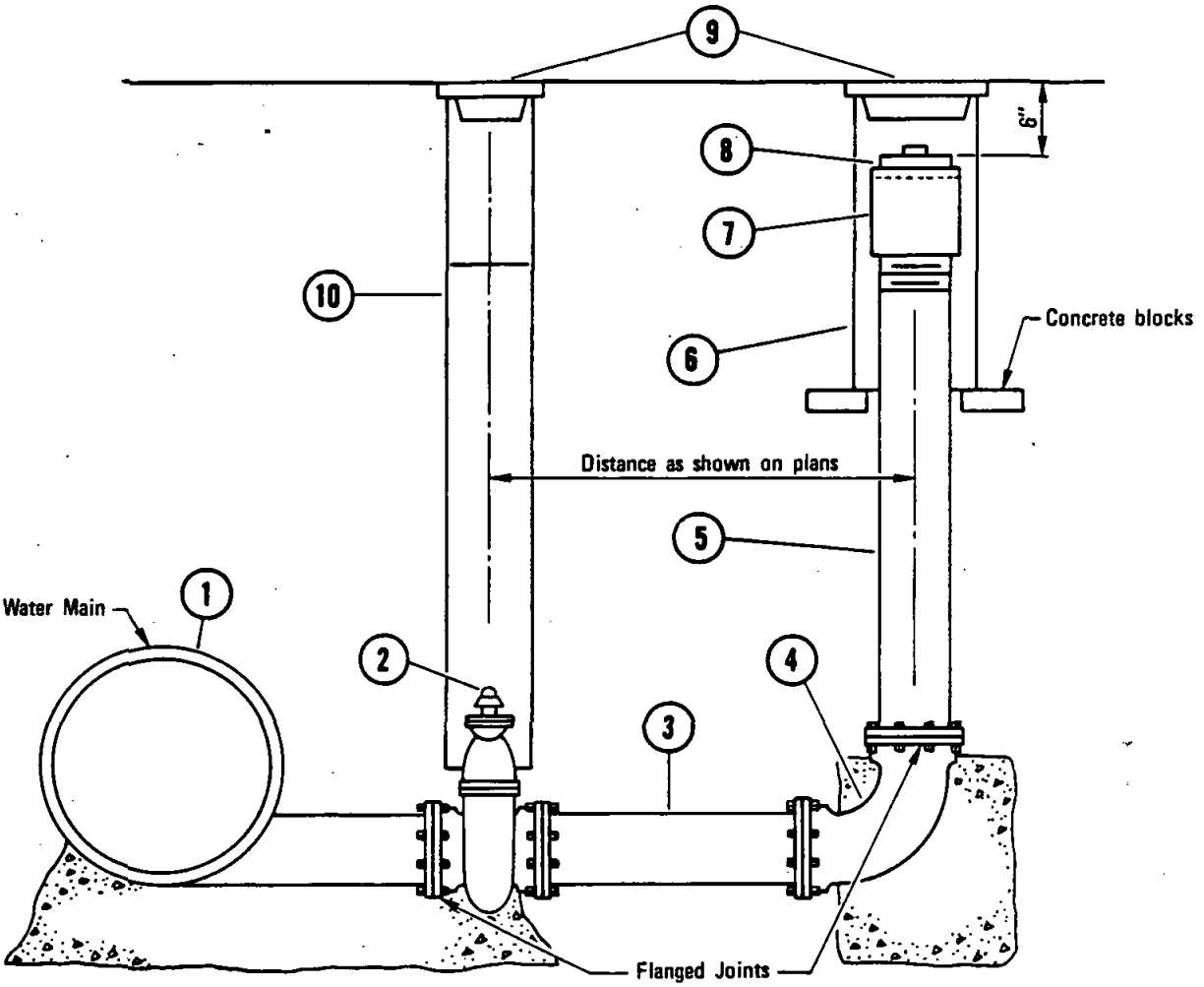

1. Main Size x Flanged Outlet, cement lined and coated.
2. Flanged Gate Valve (F x RT for A.C. Pipe).
3. Cast Iron Pipe or A.C. Pipe (6 1/2' min for A.C. Pipe).
4. F x F 90° Bend (F x RT for A.C. Pipe).
5. Galvanized Iron Pipe, threaded and flanged.
6. 10" Class 200 A.C. Pipe Gate Well.
7. Galvanized Iron Coupling, threaded.
8. Galvanized Iron Plug.
9. Gate Well Cap with 4" skirt.
10. Valve Well (see Standard Drawing W–12).

LEGEND ON PLANS

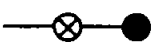

Revision	By	Approved	Date

SAN DIEGO REGIONAL STANDARD DRAWING

4" AND 6" BLOW-OFF ASSEMBLIES TYPE B

RECOMMENDED BY THE SAN DIEGO REGIONAL STANDARDS COMMITTEE

Allan A. Kershaw — Coordinator R.C.E. 19807 — Dec. 1975 Date

DRAWING NUMBER **W-9**

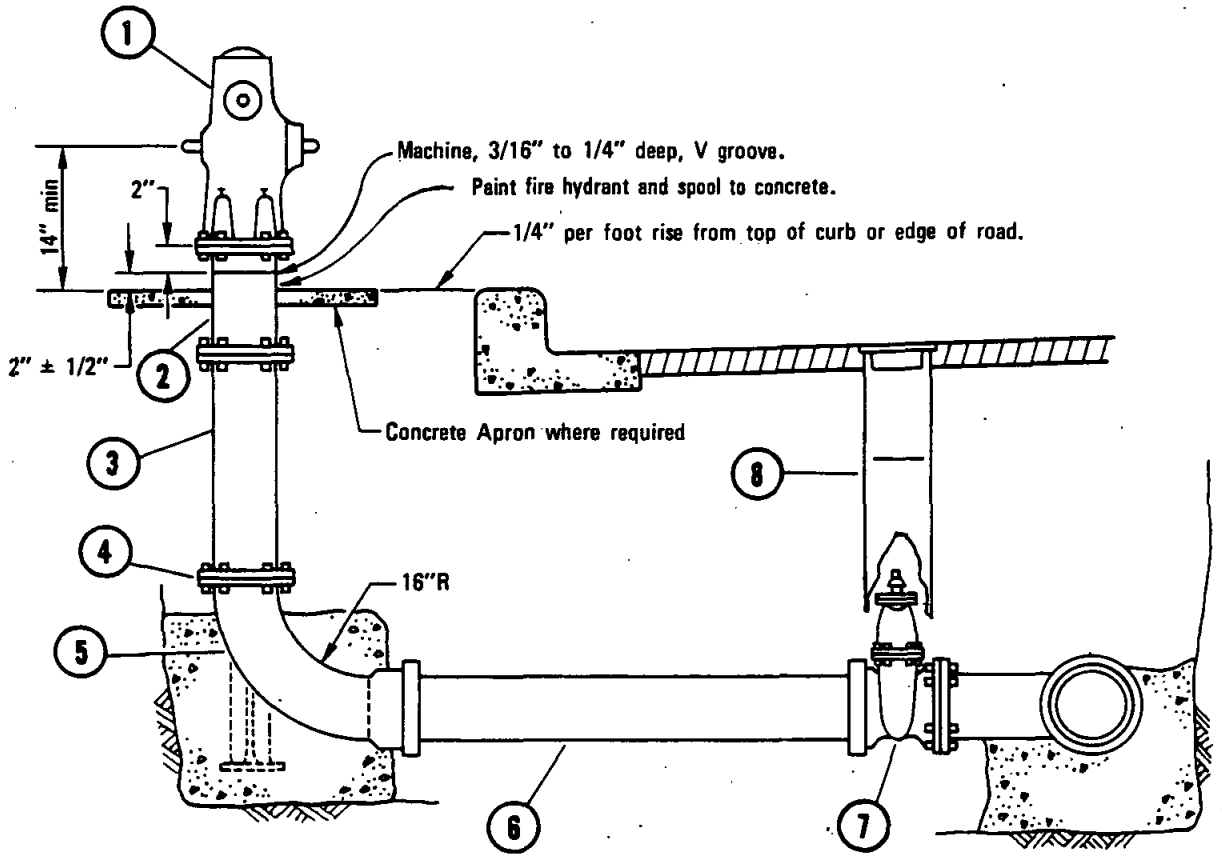

NOTE

Items 2, 3 & 6 may be cement lined and coated flanged steel pipe where permitted by Agency.

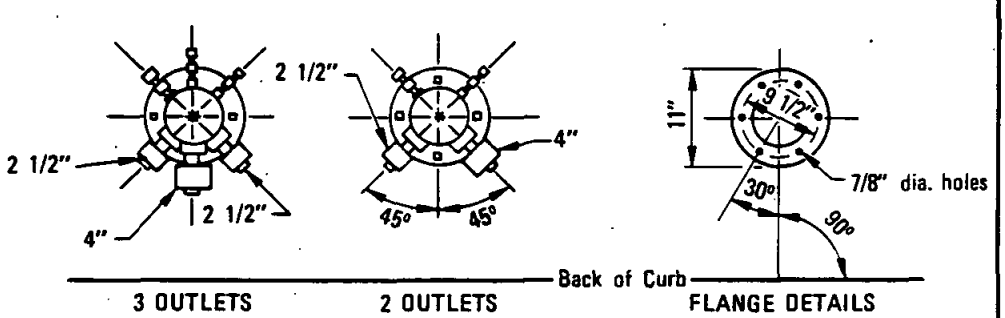

1. Fire Hydrant
2. 12" long Extension Spool
3. Extension Spool
4. 3/4"x 3" Hex. Head Machine Bolts and Nuts, Typical.
5. Hydrant Ell
6. Asbestos Cement Pipe
7. Valve
8. Valve Well Installation (see Standard Drawing W-12)

LEGEND ON PLANS

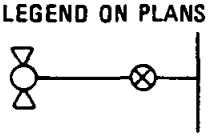

RECOMMENDED BY THE SAN DIEGO REGIONAL STANDARDS COMMITTEE

Allan A. Kershaw — Dec. 1975

Coordinator R.C.E. 19807 — Date

DRAWING NUMBER **W-10**

SAN DIEGO REGIONAL STANDARD DRAWING

6" FIRE HYDRANT

Revision	By	Approved	Date
Notes	SP	G.A.	5/92

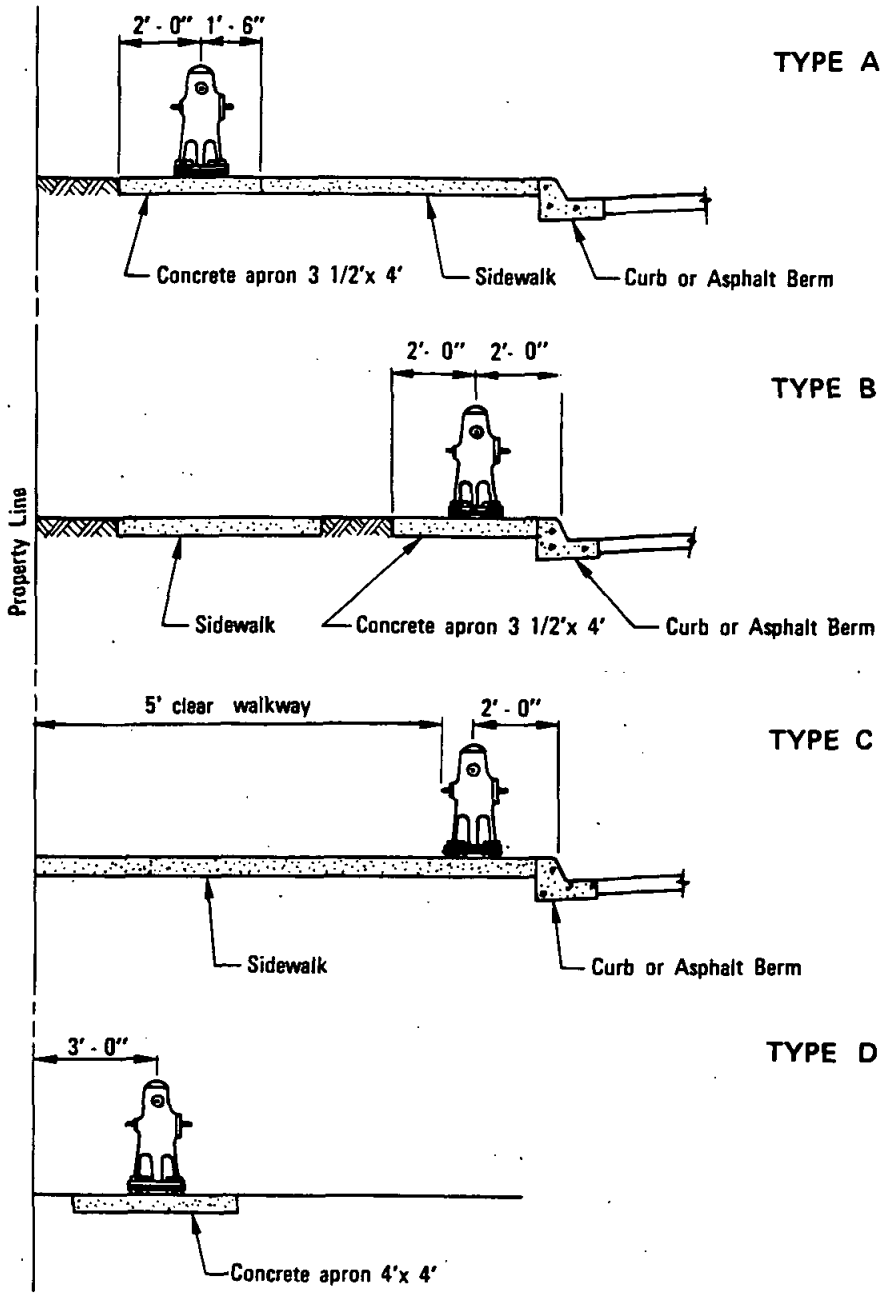

NOTES:

1. Apron, where required by Agency, shall be 4" thick (520-C-2500) concrete.
2. When distance from hydrant to the top or toe of slope is less than 2'–0", special hydrant installation will be required by Agency.
3. Where hydrant is not protected by a vertical face of curb protective posts are required. See Standard Drawing W-16 for details.
4. The centerline of the hydrant shall be located 5' minimum from curb return and minimum 3'-6" from driveway, pedestrian ramp or any fixed obstruction.

Revision	By	Approved	Date
Notes	TRP	M.B.	10-82
Note 4		A.H.	9-88

SAN DIEGO REGIONAL STANDARD DRAWING

FIRE HYDRANT LOCATIONS

RECOMMENDED BY THE SAN DIEGO REGIONAL STANDARDS COMMITTEE

Allan A. Kershaw — Dec. 1975
Coordinator R.C.E. 19807 — Date

DRAWING NUMBER W-11

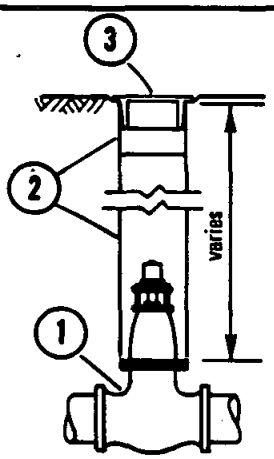

TYPE–A

1. Valve
2. 8" Asbestos Cement Pipe, Class 150
3. Valve Well Cap per Detail

NOTES

1. Provide clamp or felt to hold pipe sections (item 2) together during backfill.
2. Pipe shall be saw or machine cut on each end, no beveled sections will be permitted.
3. The final adjustment to finish grade may be made with an asbestos cement ring of 1" minimum height.

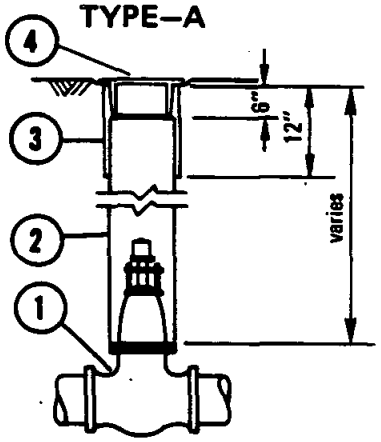

TYPE–B

1. Valve
2. 8" O.D. Steel Pipe, or 10 Ga. Asphalt Coated and Lined.
3. 8 5/8" O.D. Steel Pipe or 10 Ga. Asphalt Coated and Lined.
4. Valve Well Cap per Detail

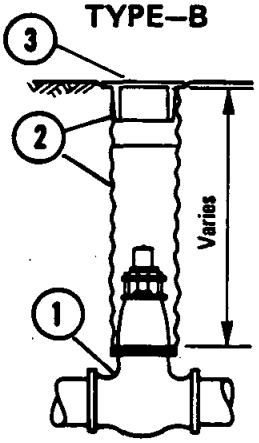

TYPE–C

1. Valve
2. 8" Corrugated Steel Pipe, 16 Gage
3. Valve Well Cap per Detail

NOTE

Pipe sections shall be tack welded together.

NOTES

1. Clearance around cover shall permit lifting by hand without damage to pipe. Maximum clearance shall be 3/16".
2. See Standard Drawing W-13 for valve stem extension, when required by Agency.

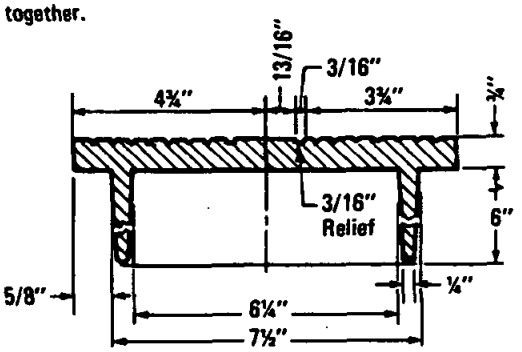

CAST IRON
VALVE WELL CAP
DETAIL

RECOMMENDED BY THE SAN DIEGO REGIONAL STANDARDS COMMITTEE

Coordinator R.C.E. 19807 Date Dec. 1975

DRAWING NUMBER W-12

SAN DIEGO REGIONAL STANDARD DRAWING

VALVE WELL INSTALLATION

Revision	By	Approved	Date
Cap Det.		M.B.	5-86

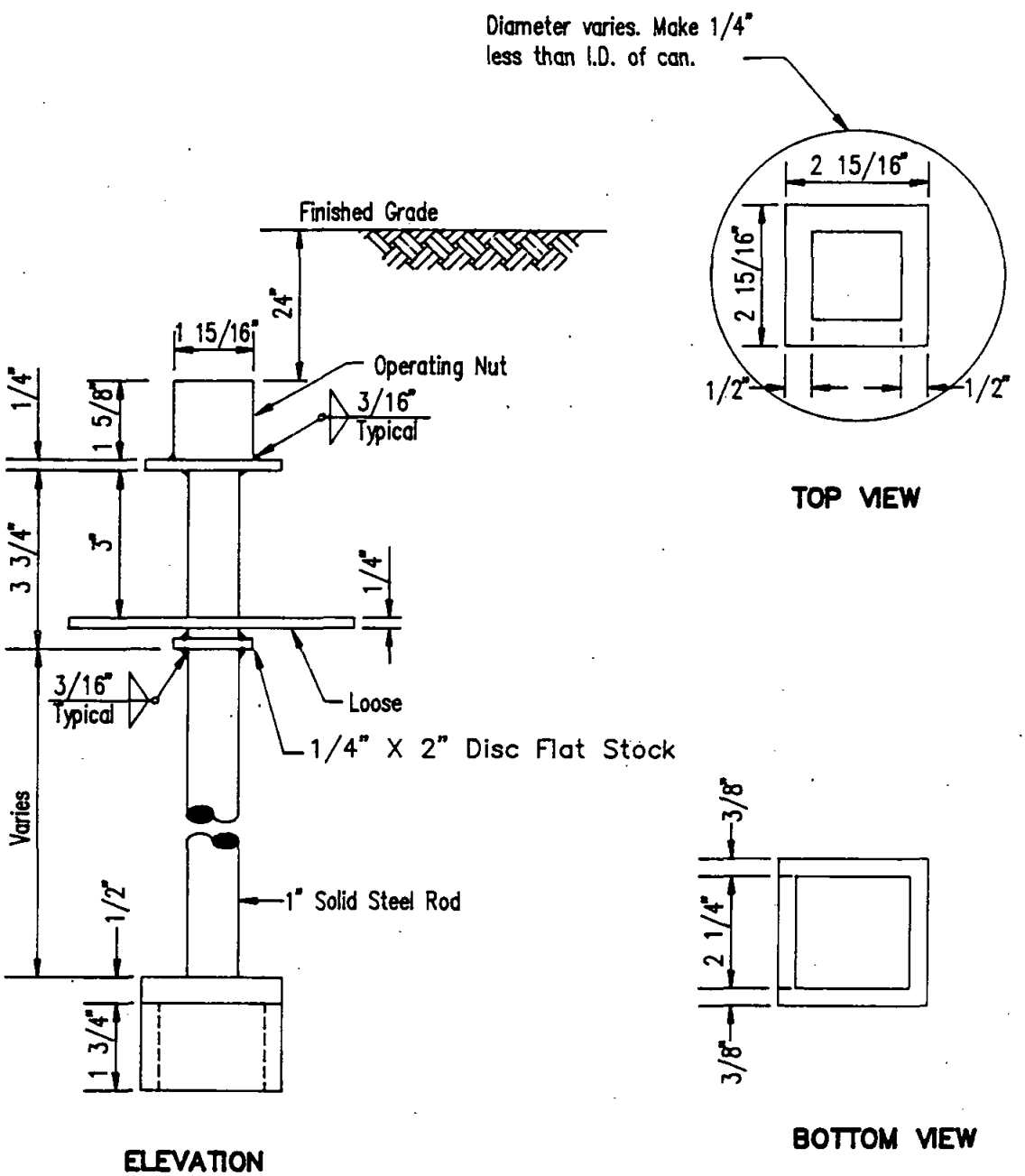

NOTES:

1. Extension to be used when top of operating nut is 5 feet or more below finish grade.
2. Paint all finished surfaces with asphalt varnish.

Revision	By	Approved	Date

SAN DIEGO REGIONAL STANDARD DRAWING

VALVE STEM EXTENSION

RECOMMENDED BY THE SAN DIEGO REGIONAL STANDARDS COMMITTEE

Chairman 5-11-92 Date

RCE 25902

DRAWING NUMBER W-13

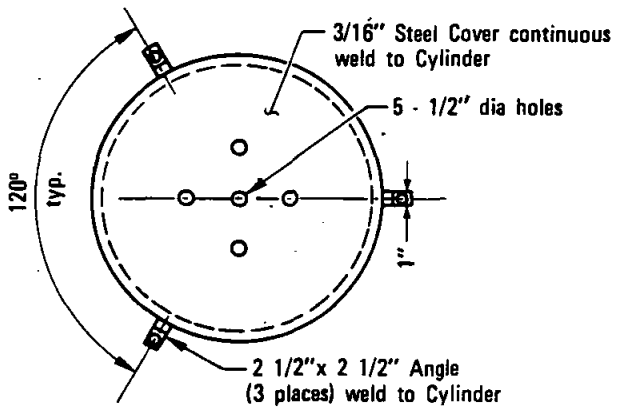

PLAN

Valve Size	Dia	H
1" & 2"	14"	24"
4"	14"	30"
6"	16"	36"

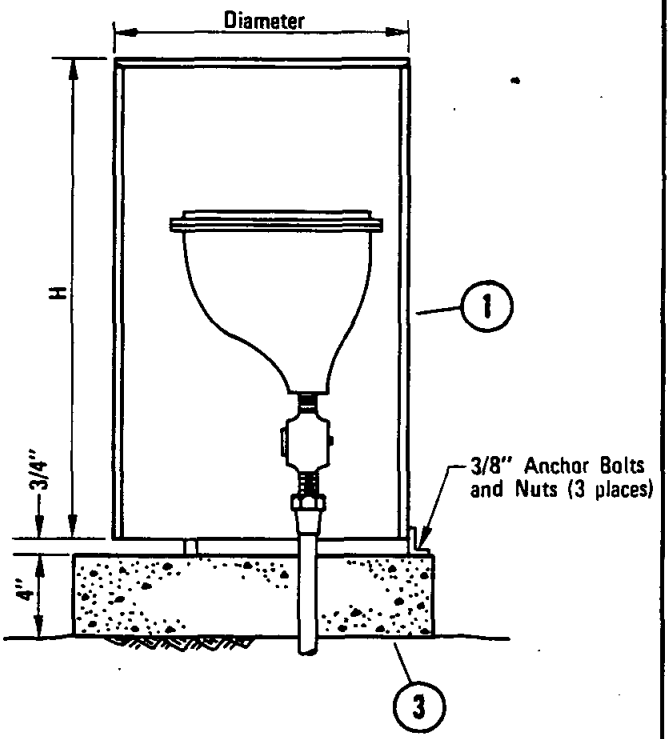

TYPE A

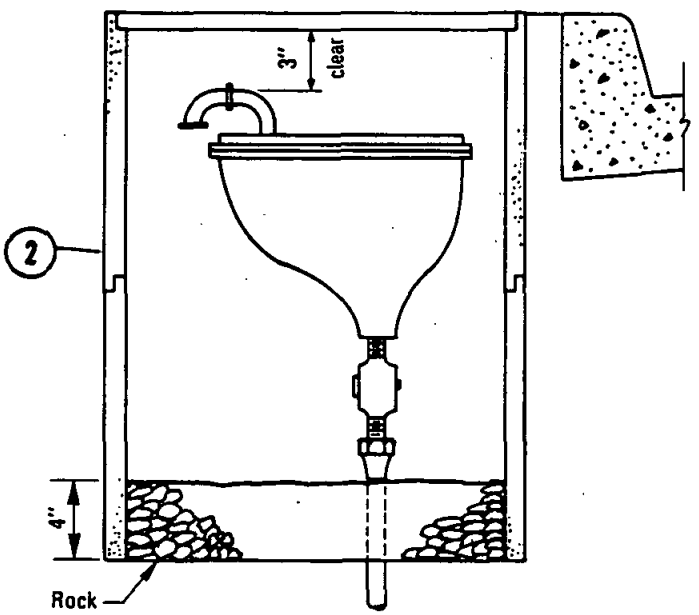

TYPE B

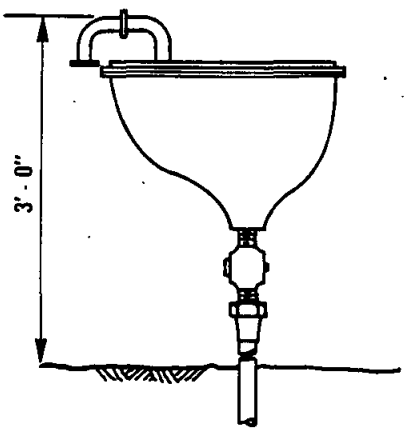

TYPE C

1. Steel enclosure, paint as specified by Agency.
2. Meter box, see Standard Drawing W-15 for location.
3. 2' x 2' pad, 470 - C - 2000 Concrete

RECOMMENDED BY THE SAN DIEGO REGIONAL STANDARDS COMMITTEE

Allan O. Kaufman — Dec. 1975

Coordinator R.C.E. 19807 — Date

DRAWING NUMBER **W-14**

SAN DIEGO REGIONAL STANDARD DRAWING

AIR AND VACUUM VALVE ENCLOSURES

Revision	By	Approved	Date

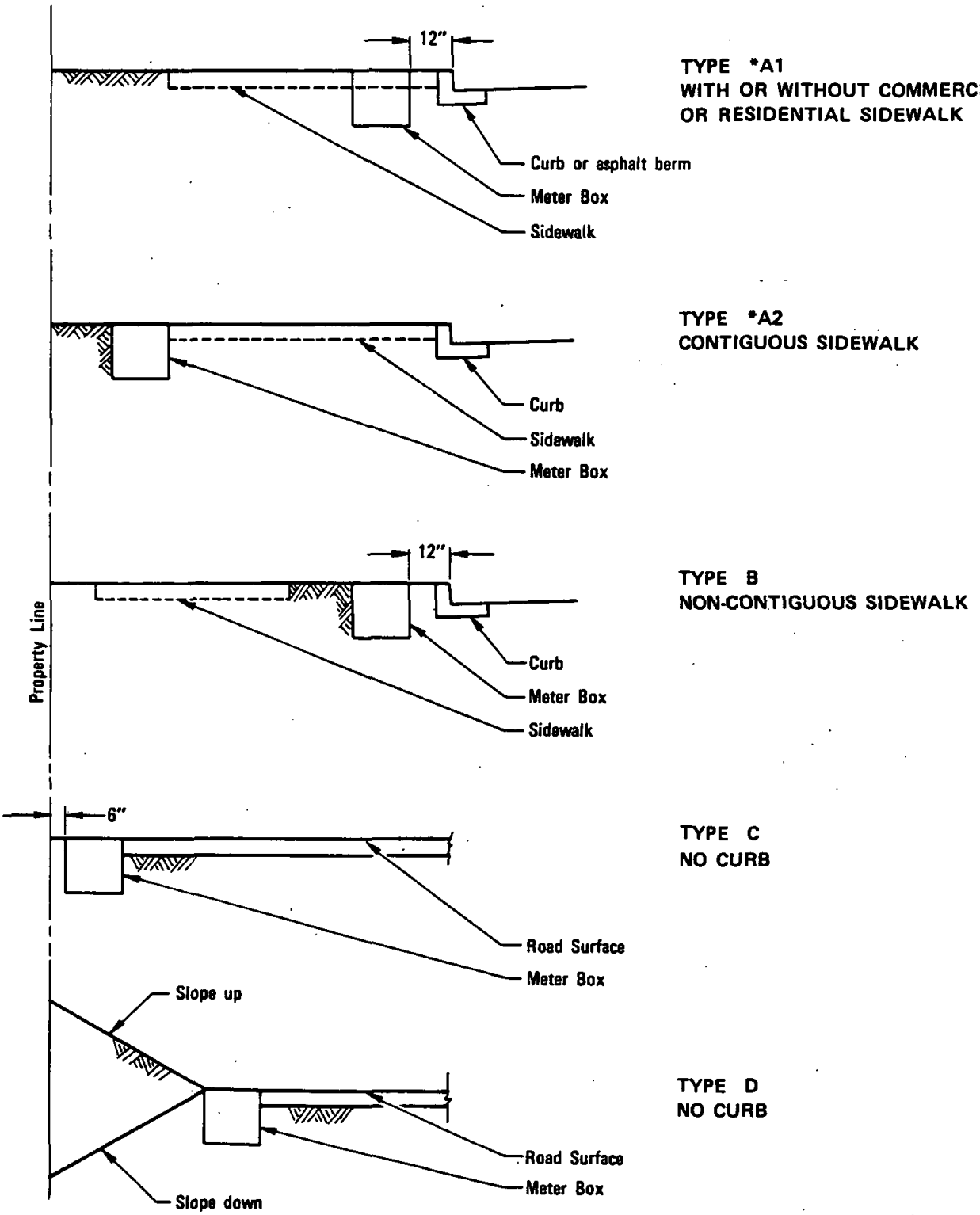

* Agency to determine alternate

NOTE:

Meter boxes shall not be located within driveways.

Revision	By	Approved	Date
Note	SC	A.H.	7-88

SAN DIEGO REGIONAL STANDARD DRAWING

METER BOX LOCATIONS

RECOMMENDED BY THE SAN DIEGO REGIONAL STANDARDS COMMITTEE

Allan A Kenland — Dec. 1975

Coordinator R.C.E. 19807 — Date

DRAWING NUMBER **W-15**

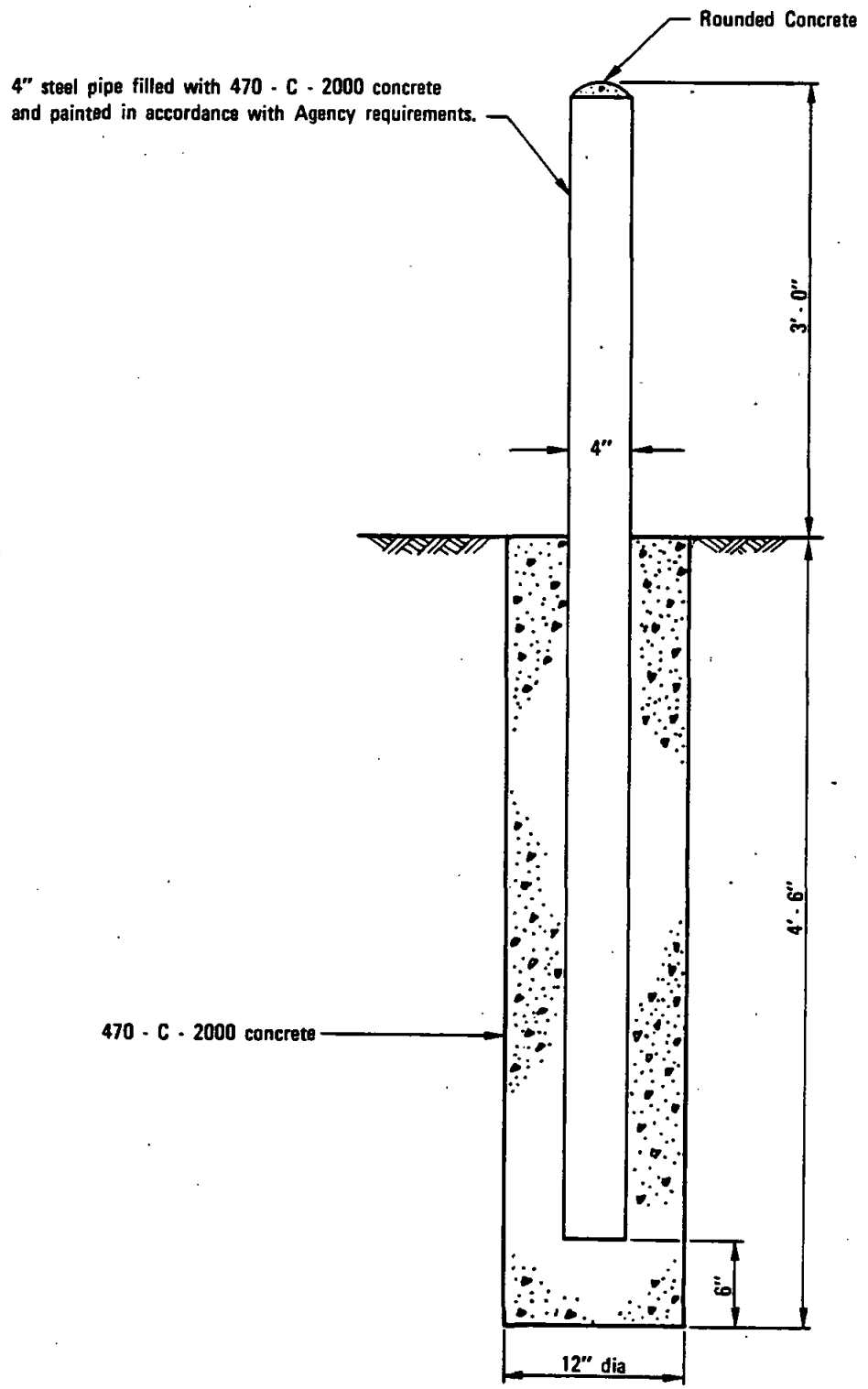

RECOMMENDED BY THE SAN DIEGO REGIONAL STANDARDS COMMITTEE Coordinator R.C.E. 15807 — Dec. 1975 Date	SAN DIEGO REGIONAL STANDARD DRAWING	Revision	By	Approved	Date
DRAWING NUMBER W-16	PROTECTION POST				

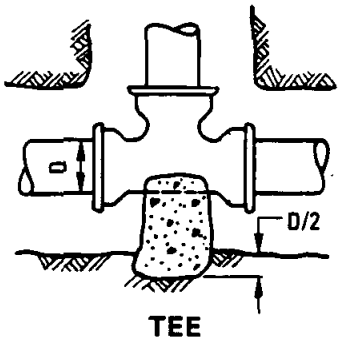

TEE

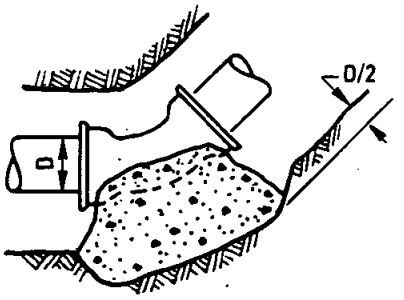

HORIZONTAL OR VERTICAL BEND

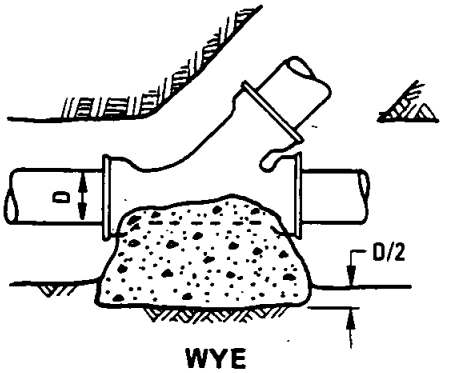

WYE

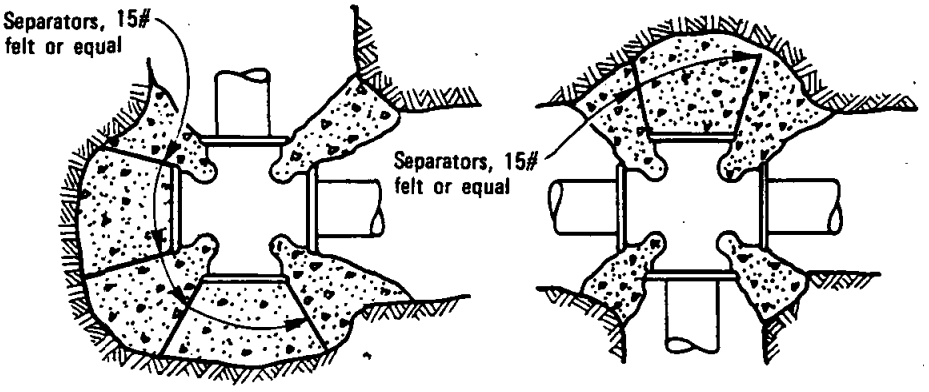

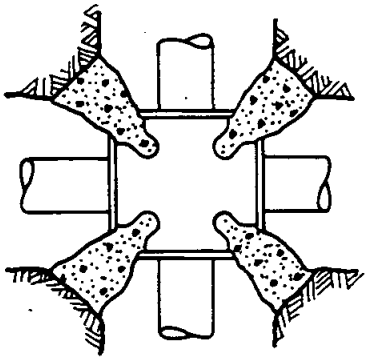

CROSS BLOCKING

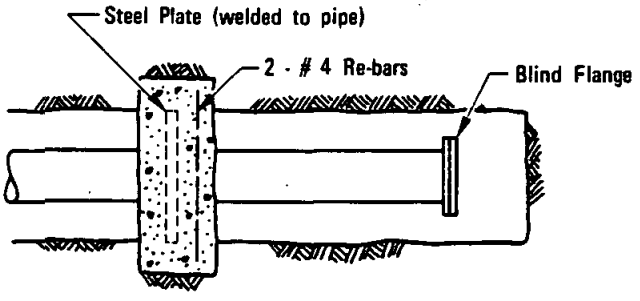

STEEL PIPE
PLAN

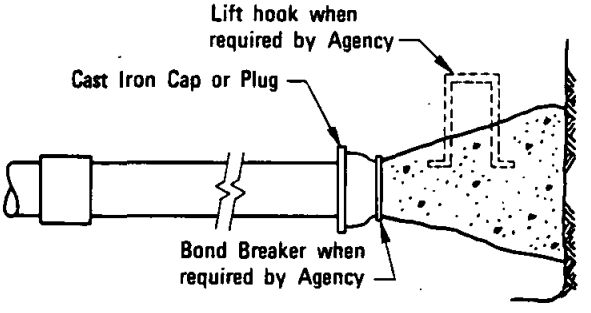

A.C. PIPE
ELEVATION

DEAD END BLOCKING

NOTES

1. Concrete shall be 470 - C - 2000.
2. See Standard Drawing W-18 for bearing areas.

Revision	By	Approved	Date

SAN DIEGO REGIONAL STANDARD DRAWING

CONCRETE THRUST BLOCKS

RECOMMENDED BY THE SAN DIEGO REGIONAL STANDARDS COMMITTEE

Allan A. Kershaw — Dec. 1975
Coordinator R.C.E. 19807 — Date

DRAWING NUMBER **W-17**

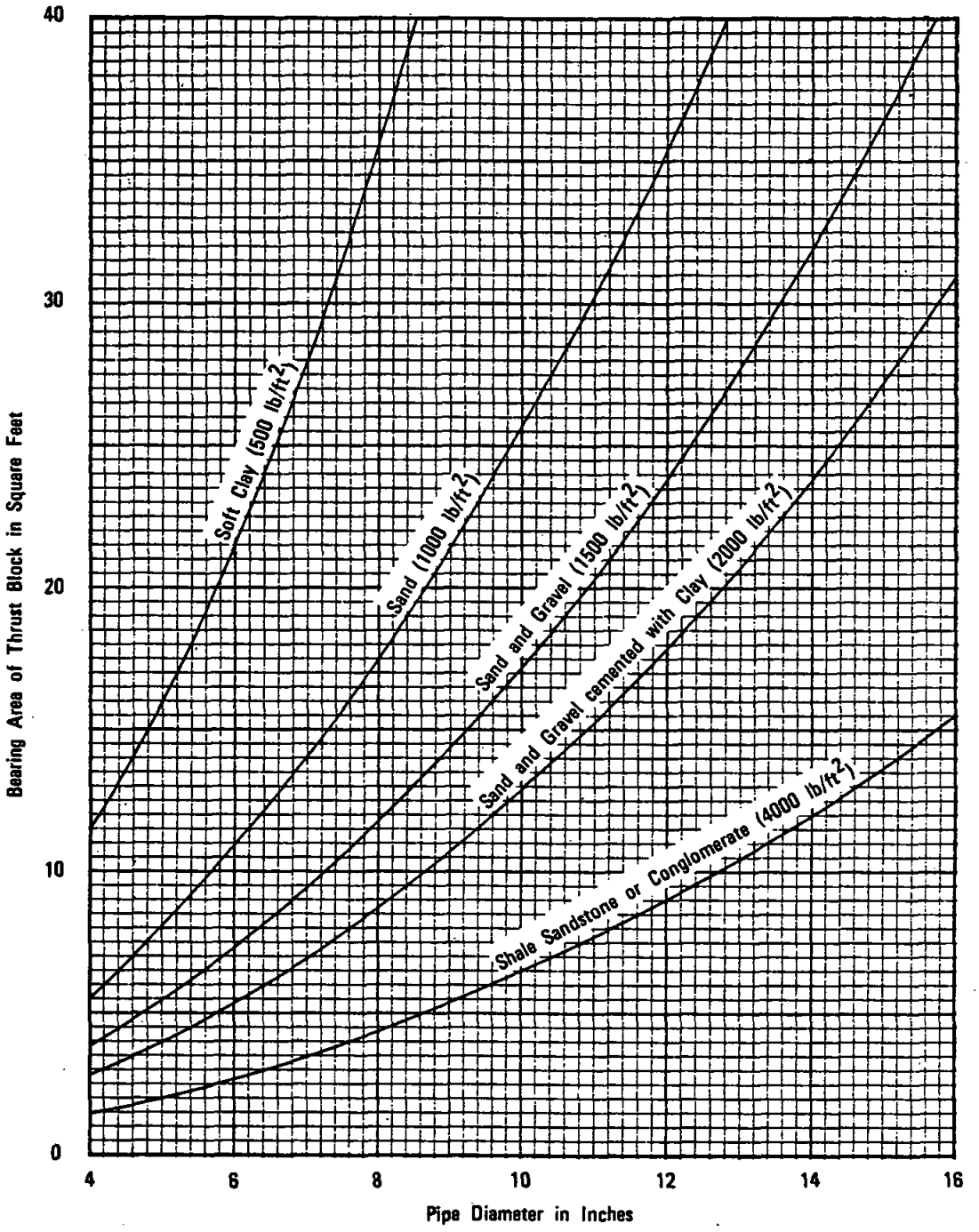

NOTES

1. Based on 225 psi test pressure and bearing values of dry soils.
2. Values from curves are for tees and deadends, i.e.; straight line thrust.
   For 90° bend: 1.4 value from curve.
   For 45° bend: 0.8 value from curve.
   For 22 1/2° bend: 0.4 value from curve.
3. For conditions not covered by curves, special thrust blocks must be computed and approved.

RECOMMENDED BY THE SAN DIEGO REGIONAL STANDARDS COMMITTEE Coordinator R.C.E. 19887 Date Dec. 1975	SAN DIEGO REGIONAL STANDARD DRAWING	Revision	By	Approved	Date
DRAWING NUMBER W-18	THRUST BLOCK BEARING AREAS				

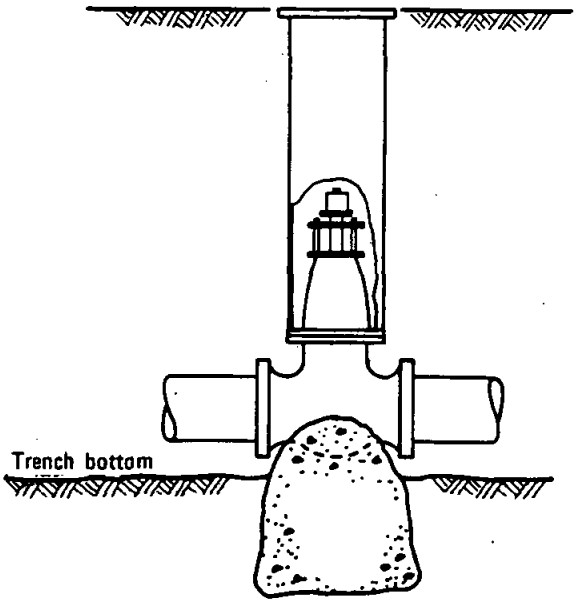

TYPE–A SUPPORT BLOCK

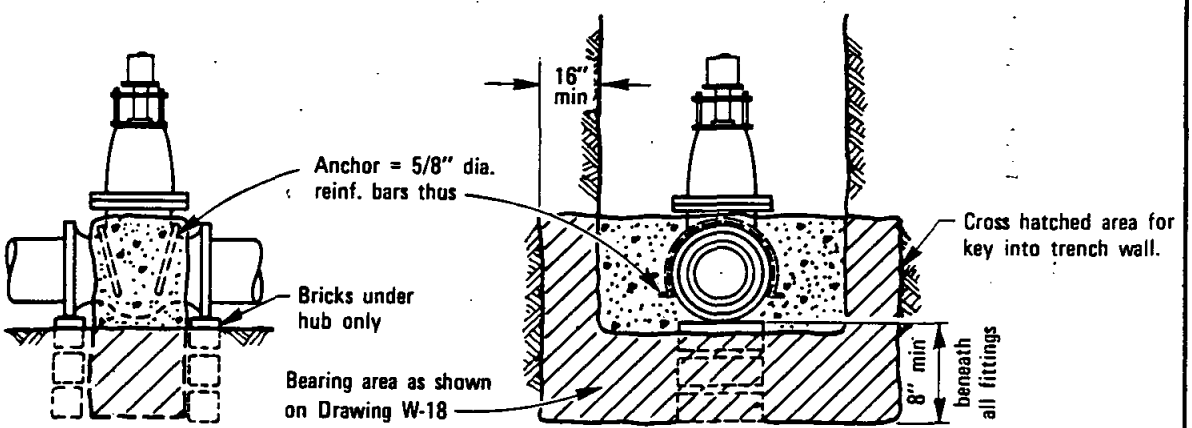

TYPE–B THRUST BLOCK

NOTE
Concrete shall be 470-C-2000.

Revision	By	Approved	Date

SAN DIEGO REGIONAL STANDARD DRAWING

CONCRETE VALVE BLOCKING

RECOMMENDED BY THE SAN DIEGO REGIONAL STANDARDS COMMITTEE

Coordinator R.C.E. 19807 — Dec. 1975 Date

DRAWING NUMBER **W-19**

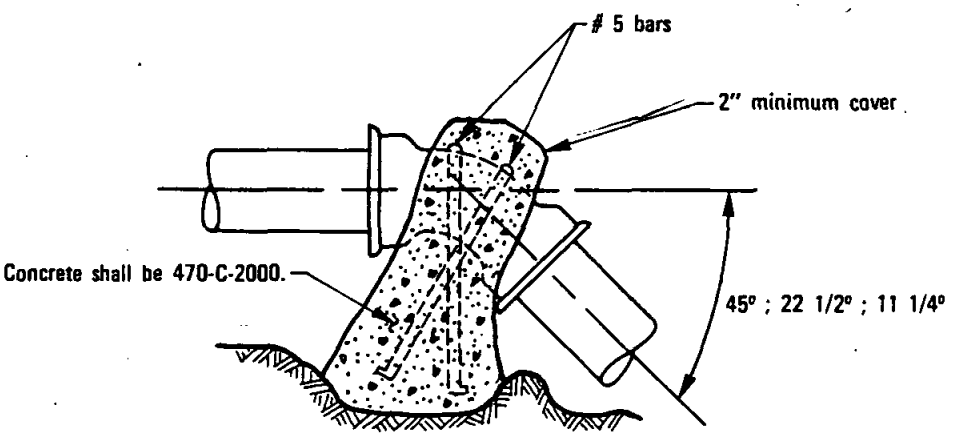

Pipe Nominal Dia	Cubic Ft. Of Concrete Required per 100 P.S.I. Pressure *		
	45°	22 1/2°	11 1/4°
4	7	4	2
6	15	8	4
8	27	14	7
10	* *	21	11
12	* *	* *	16

* Increase volumes shown in proportion to pressures existing when pressure testing pipeline.

* * Special design required.

RECOMMENDED BY THE SAN DIEGO REGIONAL STANDARDS COMMITTEE Coordinator R.C.E. 19807 Date Dec. 1975	SAN DIEGO REGIONAL STANDARD DRAWING	Revision	By	Approved	Date
DRAWING NUMBER W-20	ANCHOR BLOCK (VERTICAL BEND ONLY)				

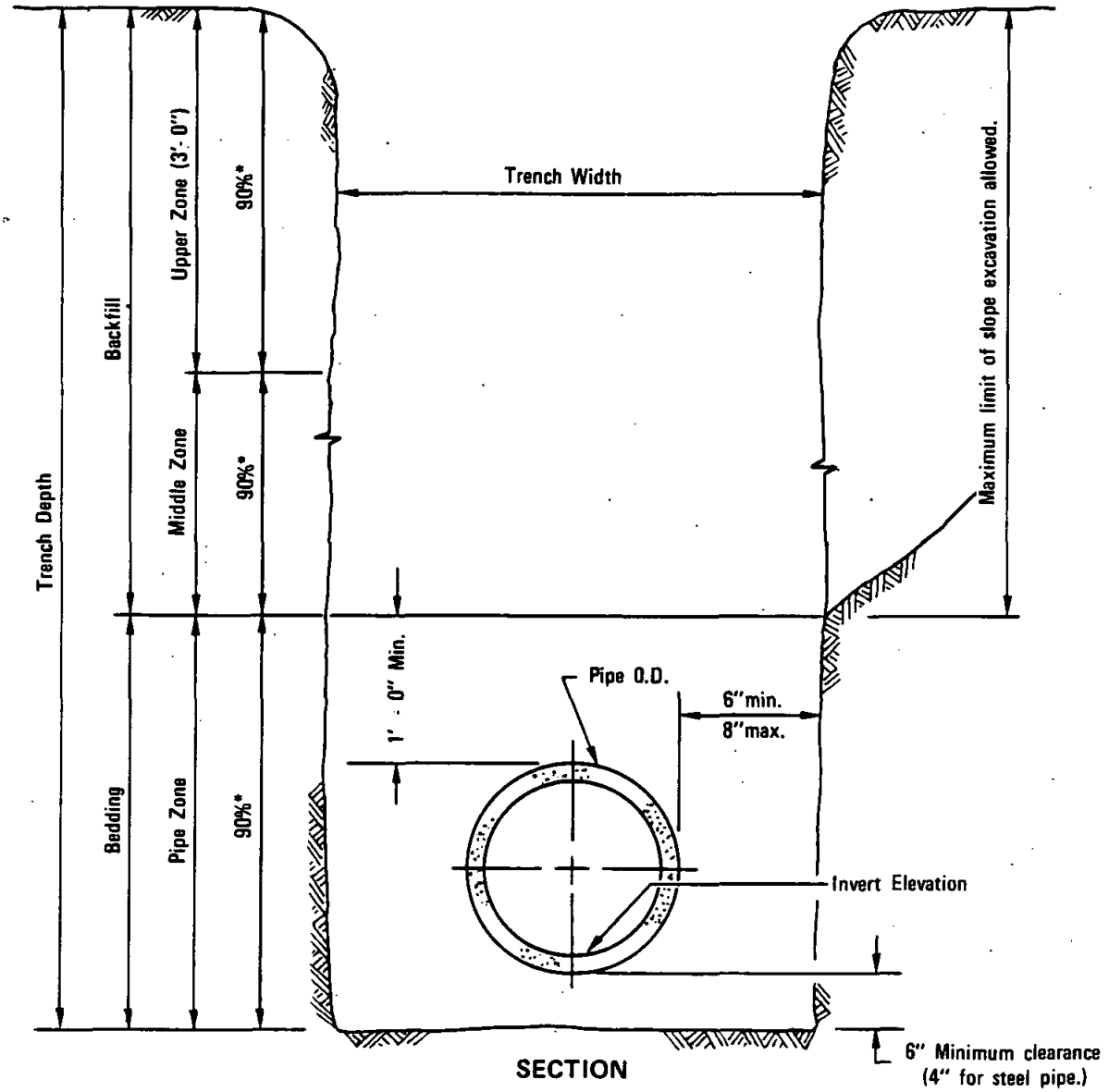

SECTION

NOTES

1. For trenching on improved streets see standard drawing G-24 or G-25 for resurfacing details.
2. (*) indicates minimum relative compaction.
3. Bedding material shall either be sand, gravel, crushed aggregate or native free draining granular material having a sand equivalent (SE) of not less than (50) and an expansion coefficient, when saturated with water, of not more than 0.5 of one percent (0.5%).

Revision	By	Approved	Date
Section	[illegible]	O.S.	7-79
Reference	[illegible]	M.B.	10-82
Compact.	[illegible]	M.B.	5-86
Note 3	[illegible]	[illegible]	5-92

SAN DIEGO REGIONAL STANDARD DRAWING

PIPE BEDDING AND TRENCH BACKFILL FOR WATER MAINS

RECOMMENDED BY THE SAN DIEGO REGIONAL STANDARDS COMMITTEE

Allan A. Kershaw — Dec. 1975
Coordinator R.C.E. 19807 — Date

DRAWING NUMBER **W-21**

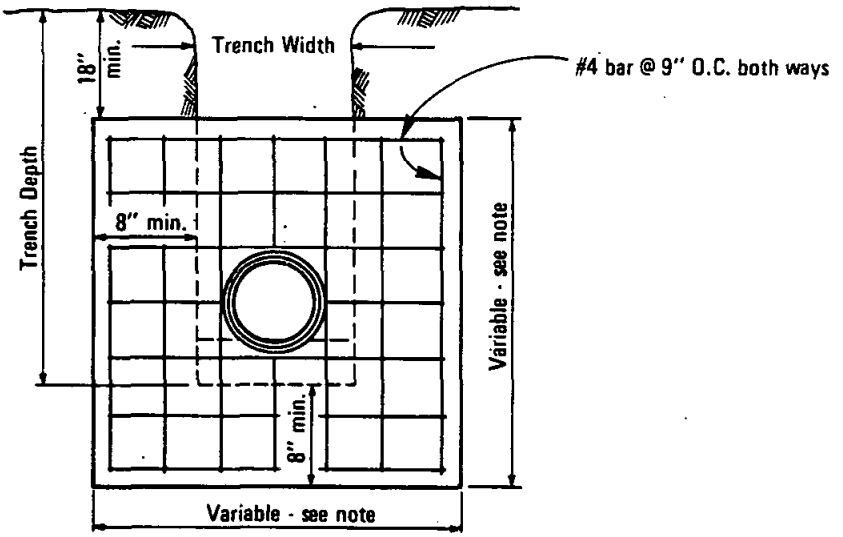

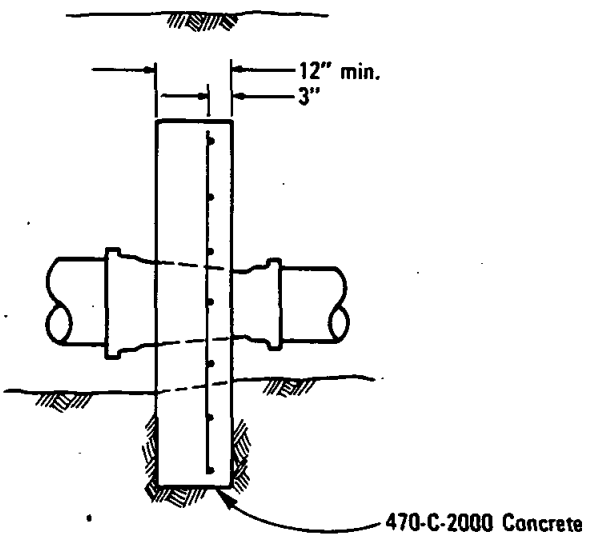

NOTE:
Bearing area shall be the difference between the bearing areas required for thrust anchorage of mains on each side of reducer as found from Std. Dwg. W-18 plus the area of the trench opening, except that minimum dimensions shown shall be adhered to.

RECOMMENDED BY THE SAN DIEGO REGIONAL STANDARDS COMMITTEE Coordinator R.C.E. 25291 Date	SAN DIEGO REGIONAL STANDARD DRAWING	Revision	By	Approved	Date
	THRUST ANCHOR FOR WATER MAIN REDUCER - 4 THRU 16 INCH				
DRAWING NUMBER W-22					

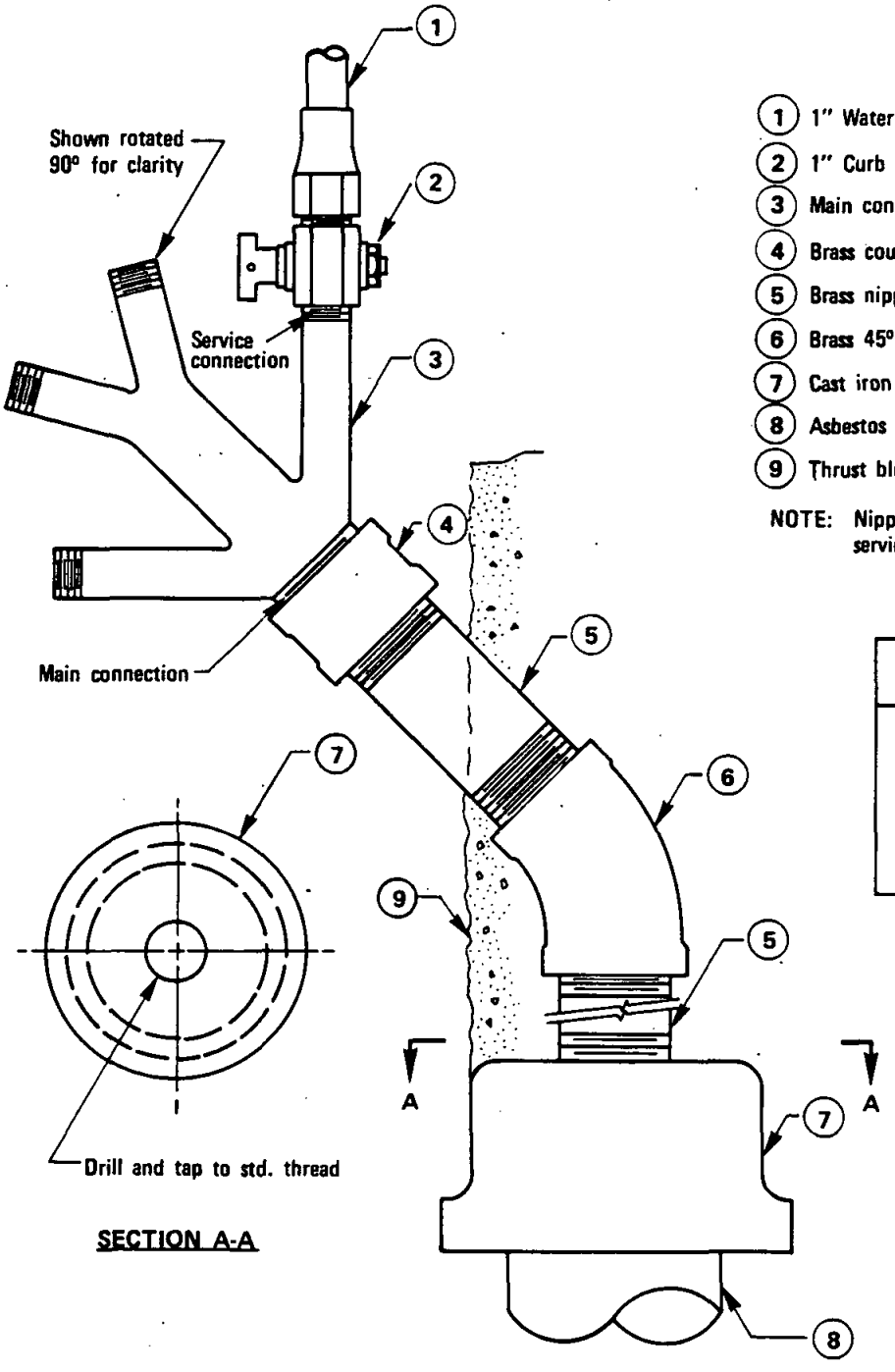

SECTION A-A

ELEVATION

1. 1" Water service per Dwg W-1
2. 1" Curb stop
3. Main connection X multiple branch connection
4. Brass coupling or 45° elbow
5. Brass nipple - 4" min. length
6. Brass 45° elbow
7. Cast iron cap
8. Asbestos cement pipe
9. Thrust block per Dwg W-17

NOTE: Nipple lengths to be sufficient to allow service connection to clear thrust block.

Service Connection	Main Connection Item 5
2	1¼"
3	1½"
4	2"
6	2½"
8	3"

Revision		Approved	Date

SAN DIEGO REGIONAL STANDARD DRAWING

MULTIPLE SERVICE ASSEMBLY DEAD END MAIN

RECOMMENDED BY THE SAN DIEGO REGIONAL STANDARDS COMMITTEE

Coordinator R.C.E. 25291 July 1979 Date

DRAWING NUMBER W-23

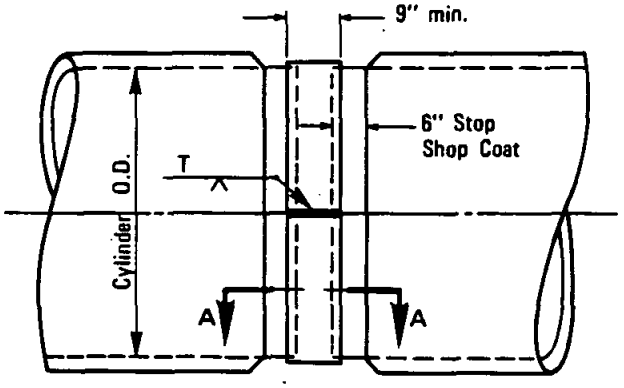

ELEVATION

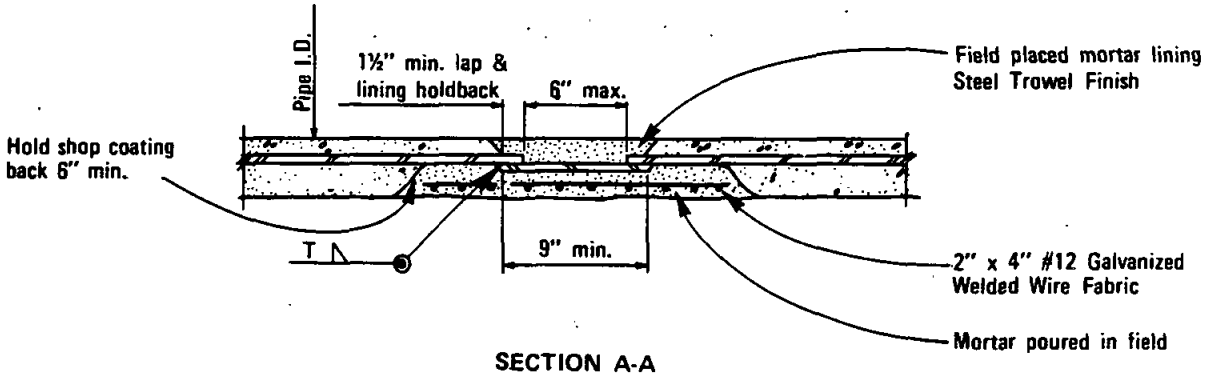

SECTION A-A

NOTE:
Contractor shall provide handholes as required to complete the work

RECOMMENDED BY THE SAN DIEGO REGIONAL STANDARDS COMMITTEE Coordinator R.C.E. 25291 Date July 1979	SAN DIEGO REGIONAL STANDARD DRAWING	Revision	By	Approved	Date
DRAWING NUMBER W-24	SPLIT BUTT STRAP				

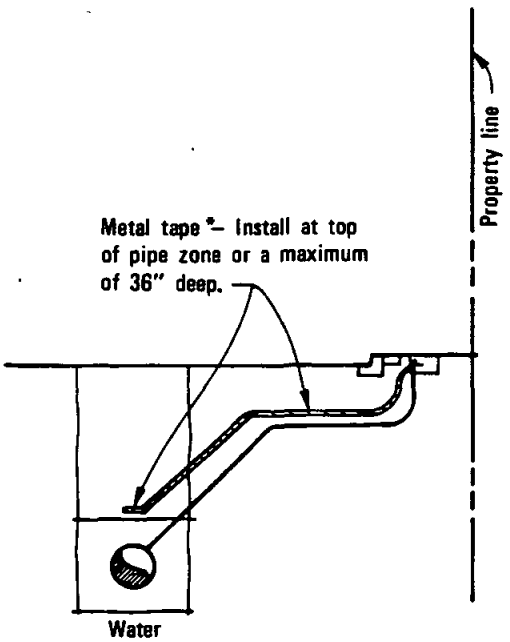

SECTION

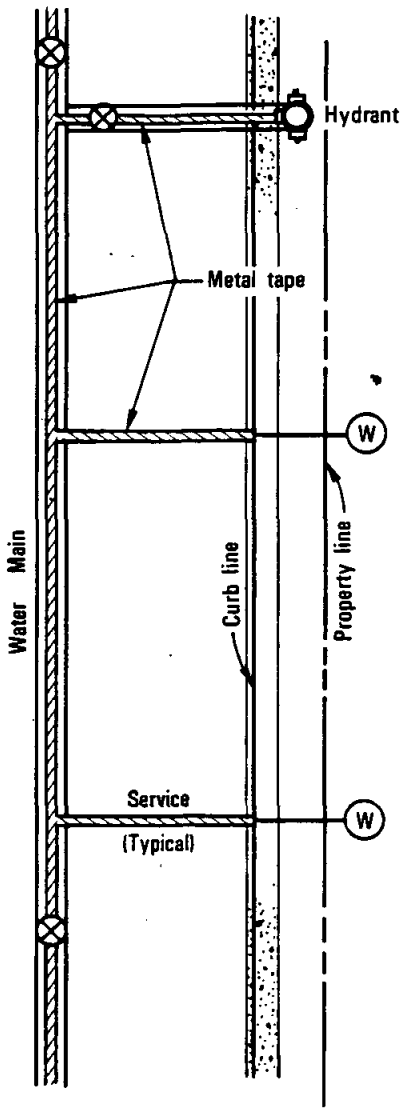

PLAN

* 1. Use 2" tape for depths of 30" or less.
2. Use 3" tape for depths greater than 30".
3. Adequately bond service tape to main tape to ensure electrical continuity.
4. Tape shall extend into service box or well casing to allow for mark-out by continuity tester.

Revision	By	Approved	Date
Notes 3,4	JP	G.d.	5/92

SAN DIEGO REGIONAL STANDARD DRAWING

METALLIC TAPE LOCATOR FOR NON-METALLIC WATER PIPE

RECOMMENDED BY THE SAN DIEGO REGIONAL STANDARDS COMMITTEE

M. Bahmanyar 4-25-86
Coordinator R.C.E. C21133 Date

DRAWING NUMBER W-25

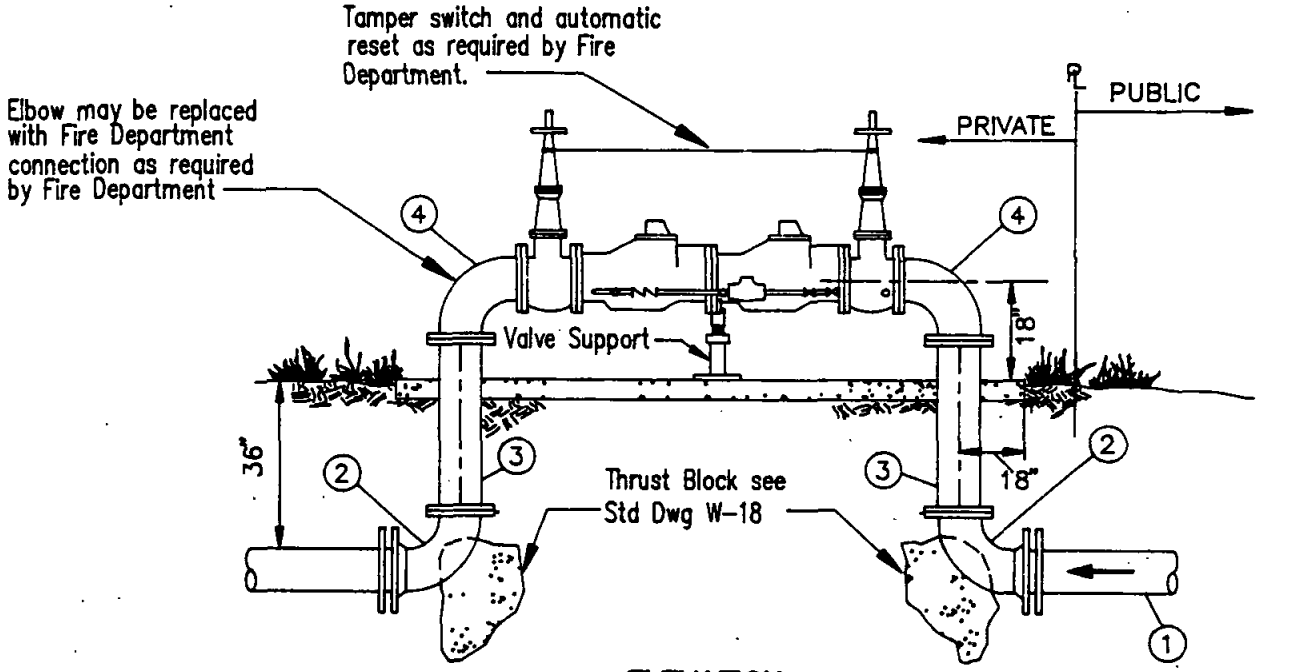

ELEVATION

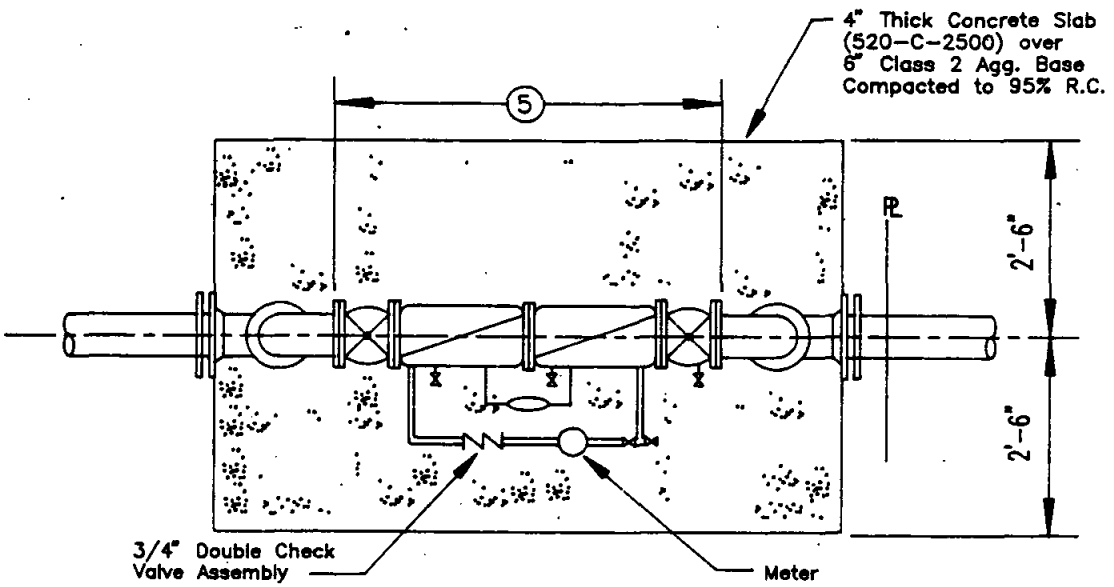

PLAN

NOTES

1. Public water main.
2. 90° ductile iron elbow: flange x flange; flange x ring tight; flange x mechanical joint (uni-flange shall not be used).
3. Flanged ductile iron spool (both ends shall be flanged).
4. 90° flanged ductile iron elbow.
5. Factory assembled Double Checked Detector Assembly/Reduced Pressure Detection Assembly with resilient seat shut off. Valves approved by the Dept. of Health Services, Office of Drinking Water.
6. Backflow preventor assembly shall be tested upon installation by a certified backflow assy. tester. Contractor shall provide the Engineer with written test results completed by a certified tester prior to the acceptance by the Engineer.

RECOMMENDED BY THE SAN DIEGO REGIONAL STANDARDS COMMITTEE Chairman RCE 25902 Date 5-4-92	SAN DIEGO REGIONAL STANDARD DRAWING	Revision	By	Approved	Date
DRAWING NUMBER W-26	BACKFLOW PREVENTER REDUCED PRESSURE PRINCIPLE				

APPENDIX "A"

TRAFFIC CONTROL PLANS

TRAFFIC CONTROL PLANS

REVISION	BY	APPROVED	DATE	SAN DIEGO REGIONAL STANDARD - APPENDIX "A"	DWG. NO.
				TRAFFIC CONTROL PLANS	TC

TRAFFIC CONTROL PLANS

GENERAL INFORMATION

The Traffic Control Plans depicted in this Appendix are intended to supplement Chapter 5 of the Caltrans Manual in providing guidance and information on preparing traffic control plans in an urban environment. Other references, such as the W.A.T.C.H. manual, may also provide useful information on traffic control procedures. It should be understood that implementation of traffic control plans must conform with the latest edition of the Caltrans Traffic Manual (Chapter 5).

Chapter 5 of the Caltrans Traffic Manual, Traffic Controls for Construction and Maintenance Work Zones, is published by the State of California, Department of Transportation (Caltrans). This manual is issued to provide the basic standards for uniform types of warning signs, lights, and devices to be placed upon any public roadway or street by a person engaged in performing work which interferes with or endangers the safe movement of traffic upon such highway or street, in accordance with Section 21400 of the California Vehicle Code.

It is the responsibility of the Contractor or Organization performing work on, or adjacent to, a roadway to install and maintain such devices which are necessary to provide safe passage for the traveling public through the work area and for the safety of the workers. Before work begins, traffic control plans for handling traffic through a construction or maintenance project shall be approved by the engineer of the public agency or authority having jurisdiction over the roadway.

Typical plans for intersections that are controlled by a traffic signal or a multi-way stop are not identified in this Appendix. These intersections require special attention in the preparation of traffic control plans. The approving agency should be notified prior to the preparation of traffic control plans when the work is in or near these intersections.

Special attention is also needed on the traffic control plans when the work areas affect bike lanes, sidewalks, pedestrian access, and curved or narrow roadways. Notification of the approving agency is desireable prior to the preparation of the plan when bicycles and pedestrian routes are affected by the work.

Nothing contained in this Appendix shall prevent local jurisdictions from modifying, changing, or adopting new specifications deemed necessary. The text and typical drawings in this Appendix are not a legal standard. Criteria for position, location, and use of traffic control devices is furnished solely for the purpose of guidance and information to assist in the preparation of traffic control plans.

Revision	By	Approved	Date
DRAWING	DWV		4-91
ORIG.			10-8-91
			4-2-92

APPENDIX "A"
SAN DIEGO REGIONAL STANDARD

TRAFFIC CONTROL PLANS

GENERAL INFORMATION

DRAWING NUMBER TC-1

TRAFFIC CONTROL PLANS

TABLE OF CONTENTS

TC-1 GENERAL INFORMATION
TC-2 TABLE OF CONTENTS
TC-3 TABLE OF CONTENTS
TC-4 DEVICE SPACING TABLES
TC-5 TRAFFIC CONTROL PLAN COVER SHEET
TC-6 SIDE OF ROAD - TWO LANE ROADWAY w/o CENTERLINE
TC-7 SIDE OF ROAD - TWO LANE ROADWAY w/CENTERLINE
TC-8 CENTER OF ROAD - TWO LANE ROADWAY
TC-9 SIDE OF ROAD - TWO LANE ROADWAY WITH FLAGGERS
TC-10 SIDE OF ROAD - MULTILANE w/CENTERLINE - ONE RIGHT LANE
TC-11 SIDE OF ROAD - MULTILANE w/CENTERLINE - TWO RIGHT LANES
TC-12 CENTER OF ROAD - MULTILANE W/CENTERLINE - ONE LEFT LANE
TC-13 CENTER OF ROAD - MULTILANE w/CENTERLINE - TWO LEFT LANES
TC-14 SIDE OF ROAD - MULTILANE w/TWO-WAY LEFT-TURN - ONE RIGHT LANE
TC-15 CENTER OF ROAD - MULTILANE w/TWO-WAY LEFT-TURN - ONE LEFT LANE
TC-16 SIDE OF ROAD - MULTILANE w/TWO-WAY LEFT-TURN - ONE RIGHT LANE
TC-17 SIDE OF ROAD - MULTILANE w/TWO-WAY LEFT-TURN - TWO RIGHT LANES
TC-18 SIDE OF ROAD - MULTILANE w/TWO-WAY LEFT-TURN - THREE RIGHT LANES
TC-19 CENTER OF ROAD - MULTILANE w/TWO-WAY LEFT-TURN - TWO LEFT LANES
TC-20 CENTER OF ROAD - MULTILANE w/TWO-WAY LEFT-TURN - THREE LEFT LANES
TC-21 SIDE OF ROAD - MULTILANE w/RAISED MEDIAN - ONE RIGHT LANE
TC-22 CENTER OF ROAD - MULTILANE w/RAISED MEDIAN - ONE LEFT LANE
TC-23 SIDE OF ROAD - INTERSECTION - WORK ON MAIN STREET - FAR SIDE
TC-24 SIDE OF ROAD - INTERSECTION - WORK ON MAIN STREET - NEAR SIDE
TC-25 CENTER OF ROAD - INTERSECTION - WORK ON MAIN STREET - FAR SIDE
TC-26 CENTER OF ROAD - INTERSECTION - WORK ON MAIN STREET - NEAR SIDE
TC-27 CENTER OF ROAD - INTERSECTION - WORK IN CENTER OF INTERSECTION
TC-28 SIDE OF ROAD - INTERSECTION - WORK ON MINOR STREET - FAR SIDE
TC-29 CENTER OF ROAD - INTERSECTION - WORK ON MINOR STREET - FAR SIDE
TC-30 SIDE/SIDE OF ROAD - INTERSECTION - WORK IN INTERSECTION
TC-31 SIDE/CENTER OF ROAD - INTERSECTION - WORK IN INTERSECTION
TC-32-89 FUTURE TRAFFIC CONTROL DRAWING ADDENDUMS

TRAFFIC CONTROL PLANS

TABLE OF CONTENTS

TC-90 SPECIAL CONDITIONS - TWO LANE ROADWAY w/o CENTERLINE
TC-91 SPECIAL CONDITIONS - TWO LANE ROADWAY w/CENTERLINE
TC-92 SPECIAL CONDITIONS - MULTILANE ROADWAY w/CENTERLINE
TC-93 SPECIAL CONDITIONS - MULTILANE ROADWAY w/TWO-WAY LEFT-TURN
TC-94 SPECIAL CONDITIONS - MULTILANE ROADWAY w/TWO-WAY LEFT-TURN
TC-95 SPECIAL CONDITIONS - MULTILANE ROADWAY w/RAISED MEDIAN
TC-96 SPECIAL CONDITIONS - INTERSECTION
TC-97 TYPICAL CONSTRUCTION SIGNS
TC-98 TYPICAL CONSTRUCTION SIGNS

Revision	By	Approved	Date
DRAWING	bwv		4-91
ORIG.			10-8-91
			4-2-92

APPENDIX "A"
SAN DIEGO REGIONAL STANDARD

TRAFFIC CONTROL PLANS

TABLE OF CONTENTS

DRAWING NUMBER TC-3

TABLE 1

RECOMMENDED SIGN SPACING FOR ADVANCE WARNING SIGN SERIES

APPROACH SPEED (MPH)	MINIMUM DISTANCE IN FEET BETWEEN SIGNS AND FROM LAST SIGN TO TAPER	MAXIMUM DEVICE SPACING IN FEET	MINIMUM TAPER LENGTHS FOR LANE WIDTHS *		
			10 FT	11 FT	12 FT
25	150-200	25	105	115	125
30	200-300	30	150	165	180
35	250-400	35	205	225	245
40	350-500	40	265	295	320
45	500-750	45	450	495	540
50	500-1000	50	500	550	600
55+	500-1500	50	550	605	660

* $L=WS^2/60$ FOR S OF 40 MPH OR LESS; L=WS FOR S OF 45MPH OR MORE.
TAPER LENGTHS SHOWN ARE ROUNDED TO NEAREST 5 FEET.

TABLE 2

RECOMMENDED TAPER LENGTH AND DEVICE SPACING FOR CHANNELIZING TAPERS

APPROACH SPEED (MPH)	TAPER LENGTH (L) *	SPACING OF CONES ALONG TAPER (FEET) +_
25	125	25
30	180	30
35	245	35
40	320	40
45	540	45
50	600	50
50+	1000	50

(*) Based on 12-foot wide lane. This column is also appropriate for lane widths less than 12 feet

NOTES:

Taper Formula

$L = S \times W$ for speeds > 40 mph.

$L = \frac{W \times S^2}{60}$ for speeds < 40 mph.

Where:

L = Minimum length of taper

S = Numerical value of APPROACH speed prior to work (mph)

W = Width of offset. (feet)

	APPENDIX "A" SAN DIEGO REGIONAL STANDARD	Revision	By	Approved	Date
		DRAWING	DWV		4-91
		DRAWING	FWM		8-91
	DEVICE SPACING TABLES	ORIG.			10-8-91
	SIGN SPACING TABLE				9-2-92
DRAWING NUMBER TC-4	TAPER LENGTH AND CONE SPACING TABLE				

Revision	By	Approved	Date
DRAWING	F.T.		4-91
DRAWING	PWM		8-91
ORIG.			10-8-91
NOTE 11			

Agency: _____

Address: _____ Phone: _____ Fax: _____

TRAFFIC CONTROL PLAN

JOB LOCATION	BEGIN CROSS STREET	END CROSS STREET	PERMIT NO.

WORK HOURS	SPEED LIMIT	WORK TO BE DONE
continuous FROM A.M. P.M. TO A.M. P.M.		

START DATE	END DATE	WORK DATE EXTENSION FROM	TO NEW END DATE	WORK DATE EXTENSION FROM	TO NEW END DATE

WORK DATE EXTENSIONS MUST BE OBTAINED PRIOR TO END DATE

CONTRACTOR	ADDRESS	CITY, STATE, ZIP	TELEPHONE

PROJECT CONTACT	24 HOUR TELEPHONE	FAX NUMBER

REQUIREMENTS: *

1. The contractor is responsible for restoring the road back to satisfactory condition which will include, but is not limited to, paving, striping, markings, signing, and loop detection.

2. The Agency reserves the right to observe these traffic control plans in operation and to make changes as field conditions warrant.

3. Trench will be backfilled or steel-plated during non-working hours.
Steel plates shall have asphaltic ramp on all edges.
All dirt, dust, and debris shall be removed from street at end of each day and at the end of the job.
The street shall be in driveable condition at all times.

4. Any work that creates an undue safety risk or creates severe congestion will be shut down by the Agency.

5. A copy of all traffic requirements and traffic control plans issued by the Agency must be kept on the job site.

6. Approval of this plan does not constitute an official Permit. Contact the Agency for information on obtaining a permit.

7. All travel lanes will typically be a minimum of 12 feet wide unless otherwise approved specifically by the local jurisdiction.

8. Flashing arrow boards as required by the local jurisdiction.

9. Warning (W) series signs used in work zones shall be Black on Orange.

10. Cones and pylons shall have yellow reflectorized sleeves along centerline, white reflectorized sleeves along outside shoulder.

11. If parking is allowed in advance warning area, advance warning signs should be mounted on high level devices.

THIS TRAFFIC CONTROL PLAN IS NOT VALID UNLESS AN APPLICABLE PERMIT IS ATTACHED

*SUBJECT TO LOCAL AGENCY REQUIREMENTS.

SEE ATTACHED SHEET(S) FOR TRAFFIC CONTROL PLAN LAYOUT
STANDARD DRAWINGS MAY BE APPLICABLE

APPENDIX "A"
SAN DIEGO REGIONAL STANDARD

TRAFFIC CONTROL PLAN
COVER SHEET

DRAWING NUMBER TC-5

DRAWING NUMBER TC-6

SIDE OF ROAD WORK AREA

TWO LANE TRAFFIC CONTROL
WITHOUT CENTERLINE

APPENDIX "A"
SAN DIEGO REGIONAL STANDARD

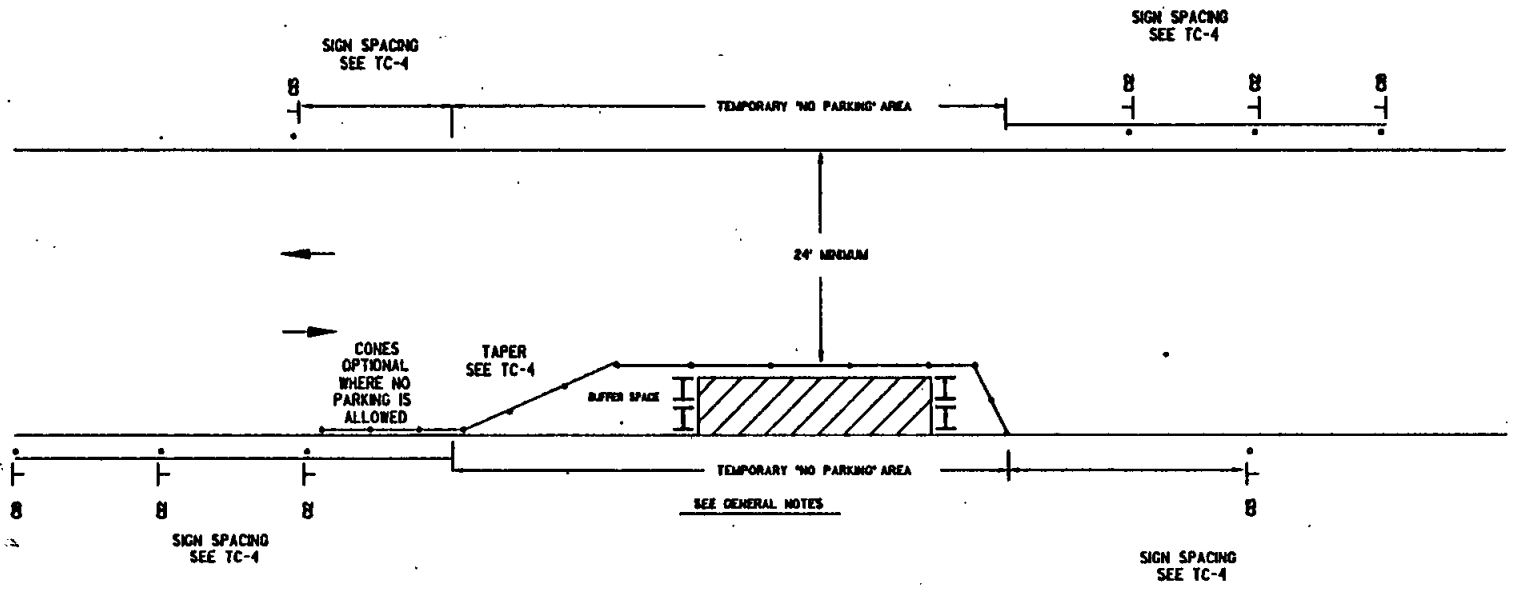

LEGEND

● CONE | BARRICADE | FLAGGER | SIGN | FLASHING ARROW SIGN | WORK AREA | TRAFFIC DIRECTION

TRAFFIC ENGINEERS COMMENTS

SUBMITTED BY:
NAME
AGENCY
ADDRESS
PHONE

POSTED SPEED LIMIT	APPROACH SPEED	TAPER LENGTH	SPACING OF CONES	SIGN SPACING

SEE TC-4 FOR SIGN AND CONE SPACING AND TAPER LENGTH

GENERAL NOTES

For hours of darkness, change cones to vertical barricades with steady burn lights.

This plan DOES NOT apply at signalized or multi-way stop intersections. Consult the local jurisdiction when preparing Traffic Control Plans near these intersections.

This plan MAY NOT apply when the work areas affect bike lanes, sidewalks, pedestrian access, and curved or narrow roadways. Consult the approving agency when preparing the Traffic Control Plan for these areas.

Nothing contained on this drawing shall prevent local jurisdictions from modifying changing, or adopting new specifications deemed necessary. Criteria for position, location, and use of Traffic Control Devices is solely for the purpose of guidance to assist in the set up of the Traffic Control Plans.

TC-5 is required for all Traffic Control Plans.

Revision	By	Approved	Date
DRAWING	DWV		4-91
DRAWING	FMM		8-91
ORIG.			10-8-91

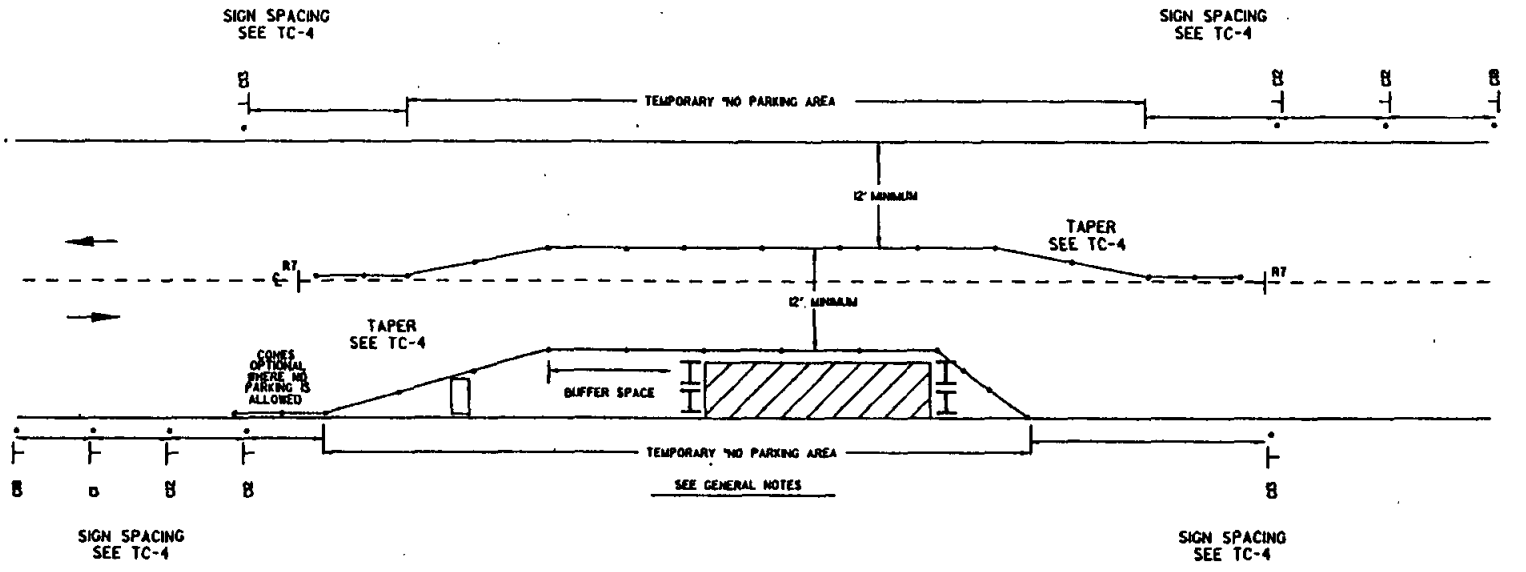

LEGEND

CONE | BARRICADE | FLAGGER | SIGN | FLASHING ARROW SIGN | WORK AREA | TRAFFIC DIRECTION

TRAFFIC ENGINEERS COMMENTS

POSTED SPEED LIMIT	APPROACH SPEED	TAPER LENGTH	SPACING OF CONES	SIGN SPACING

SEE TC-4 FOR SIGN AND CONE SPACING AND TAPER LENGTH

SUBMITTED BY:
NAME
AGENCY
ADDRESS
PHONE

GENERAL NOTES

For hours of darkness, change cones to vertical barricades with steady burn lights.

This plan DOES NOT apply at signalized or multi-way stop intersections. Consult the local jurisdiction when preparing Traffic Control Plans near these intersections.

This plan MAY NOT apply when the work areas affect bike lanes, sidewalks, pedestrian access, and curved or narrow roadways. Consult the approving agency when preparing the Traffic Control Plan for these areas.

Nothing contained on this drawing shall prevent local jurisdictions from modifying changing, or adopting new specifications deemed necessary. Criteria for position, location, and use of Traffic Control Devices is solely for the purpose of guidance to assist in the set up of the Traffic Control Plans.

TC-5 is required for all Traffic Control Plans.

Revision	By	Approved	Date
DRAWING	DWV		4-91
DRAWING	PJM		8-91
ORIG.			10-8-91

APPENDIX "A"
SAN DIEGO REGIONAL STANDARD

SIDE OF ROAD WORK AREA

TWO LANE TRAFFIC CONTROL WITH CENTERLINE

DRAWING NUMBER TC-7

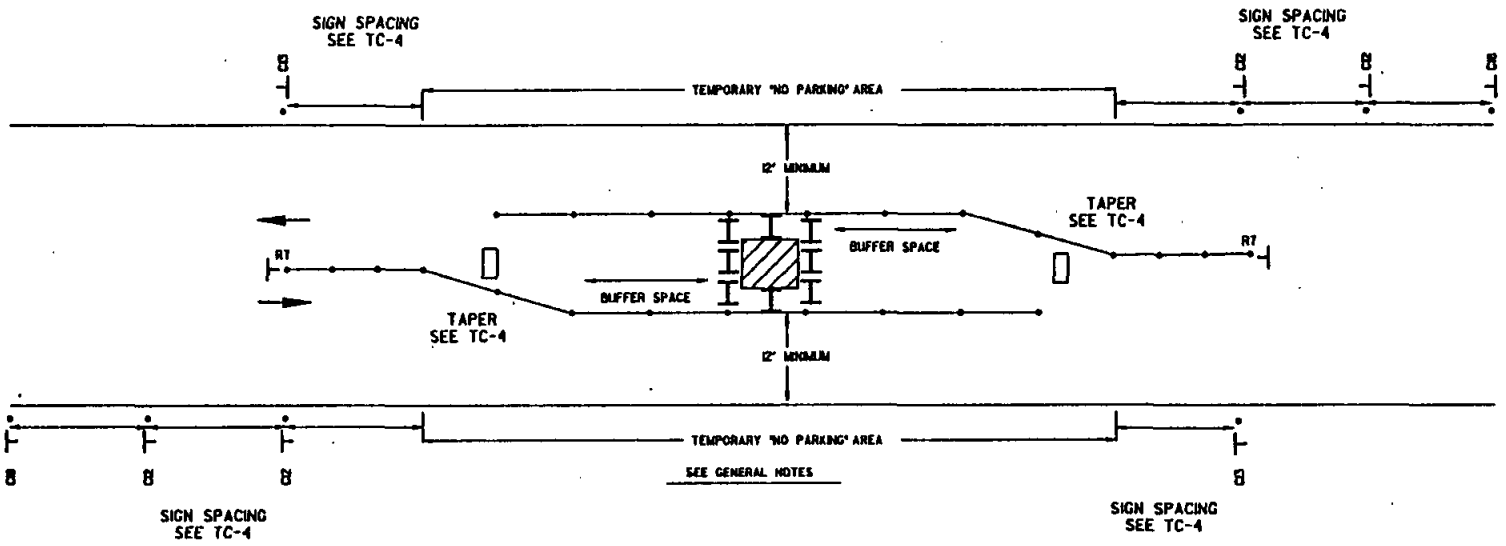

LEGEND

CONE | BARRICADE | FLAGGER | SIGN | FLASHING ARROW SIGN | WORK AREA | TRAFFIC DIRECTION

TRAFFIC ENGINEERS COMMENTS

SUBMITTED BY:
NAME
AGENCY
ADDRESS
PHONE

POSTED SPEED LIMIT	APPROACH SPEED	TAPER LENGTH	SPACING OF CONES	SIGN SPACING

SEE TC-4 FOR SIGN AND CONE SPACING AND TAPER LENGTH

GENERAL NOTES

For hours of darkness, change cones to vertical barricades with steady burn lights.

This plan DOES NOT apply at signalized or multi-way stop intersections. Consult the local jurisdiction when preparing Traffic Control Plans near these intersections.

This plan MAY NOT apply when the work areas affect bike lanes, sidewalks, pedestrian access, and curved or narrow roadways. Consult the approving agency when preparing the Traffic Control Plan for these areas.

Nothing contained on this drawing shall prevent local jurisdictions from modifying changing, or adopting new specifications deemed necessary. Criteria for position, location, and use of Traffic Control Devices is solely for the purpose of guidance to assist in the set up of the Traffic Control Plans.

TC-5 is required for all Traffic Control Plans.

CENTER OF ROAD WORK AREA

TWO LANE TRAFFIC CONTROL

APPENDIX "A"
SAN DIEGO REGIONAL STANDARD

DRAWING NUMBER TC-8

Revision	By	Approved	Date
DRAWING	DRV		4-91
DRAWING	FKM		8-91
ORIG.			10-8-91

Revision	By	Approved	Date
DRAWING	DRW		4-91
DRAWING	FMM		8-91
ORIG.			10-8-91

SIDE OF ROAD WORK AREA

TWO LANE TRAFFIC CONTROL WITH FLAGGERS

APPENDIX "A"
SAN DIEGO REGIONAL STANDARD

DRAWING NUMBER TC-9

REFER TO CALTRANS MANUAL 5-07.3

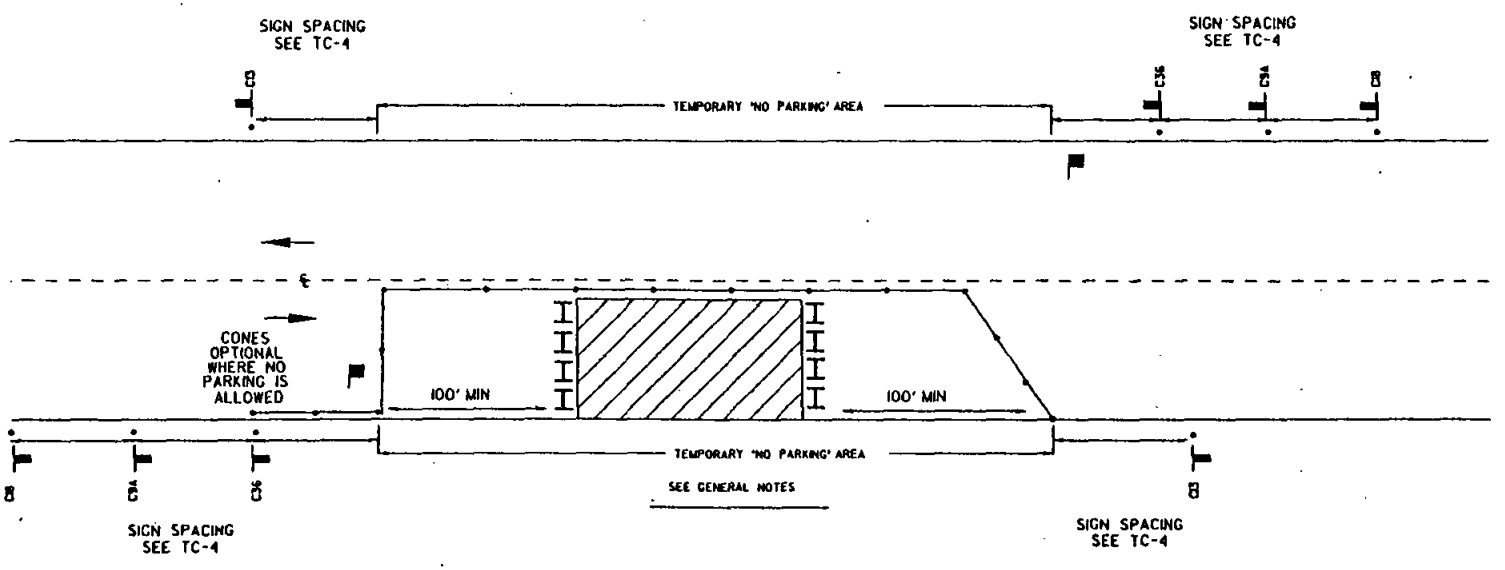

EYE CONTACT MUST BE MAINTAINED BETWEEN FLAGGERS OR USE 2-WAY RADIO COMMUNICATION.

LEGEND

CONE | BARRICADE | FLAGGER | SIGN | FLASHING ARROW SIGN | WORK AREA | TRAFFIC DIRECTION

TRAFFIC ENGINEERS COMMENTS

SUBMITTED BY:
NAME
AGENCY
ADDRESS
PHONE

POSTED SPEED LIMIT	APPROACH SPEED	TAPER LENGTH	SPACING OF CONES	SIGN SPACING

SEE TC-4 FOR SIGN AND CONE SPACING AND TAPER LENGTH

GENERAL NOTES

For hours of darkness, change cones to vertical barricades with steady burn lights.

This plan DOES NOT apply at signalized or multi-way stop intersections. Consult the local jurisdiction when preparing Traffic Control Plans near these intersections.

This plan MAY NOT apply when the work areas affect bike lanes, sidewalks, pedestrian access, and curved or narrow roadways. Consult the approving agency when preparing the Traffic Control Plan for these areas.

Nothing contained on this drawing shall prevent local jurisdictions from modifying changing, or adopting new specifications deemed necessary. Criteria for position, location, and use of Traffic Control Devices is solely for the purpose of guidance to assist in the set up of the Traffic Control Plans.

TC-5 is required for all Traffic Control Plans.

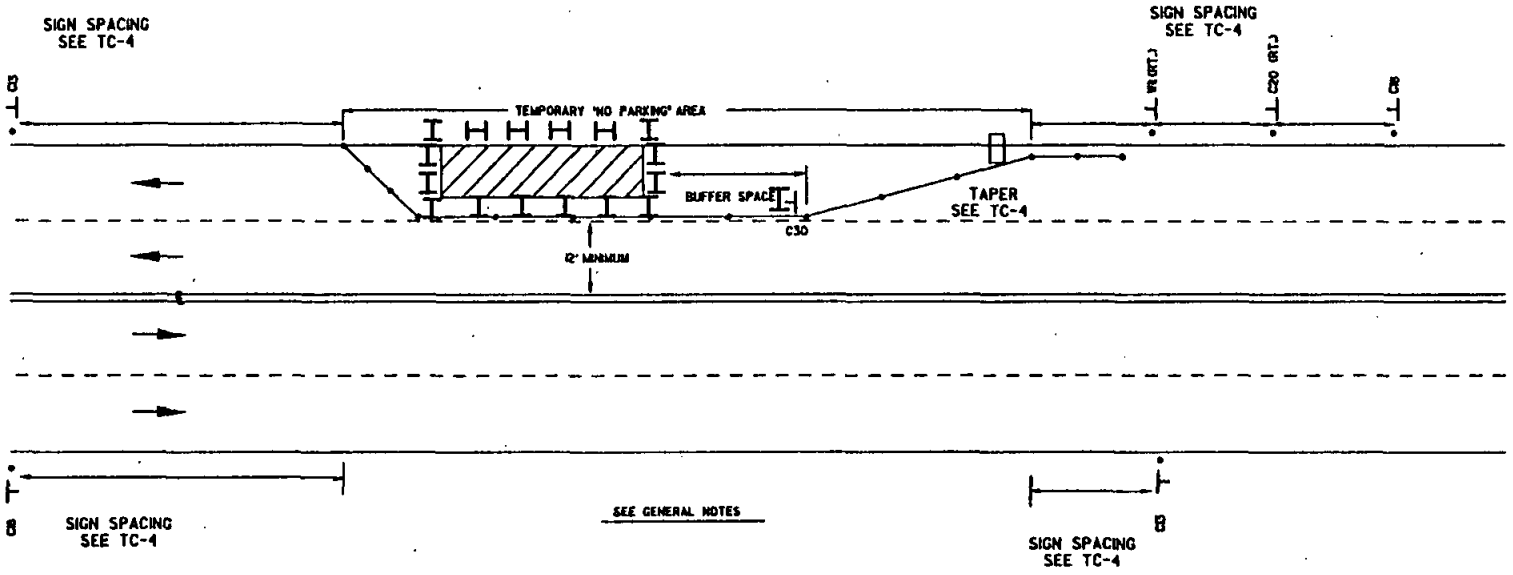

LEGEND

● CONE | H BARRICADE | FLAGGER | SIGN | FLASHING ARROW SIGN | WORK AREA | TRAFFIC DIRECTION

TRAFFIC ENGINEERS COMMENTS

SUBMITTED BY:
NAME
AGENCY
ADDRESS
PHONE

POSTED SPEED LIMIT	APPROACH SPEED	TAPER LENGTH	SPACING OF CONES	SIGN SPACING

SEE TC-4 FOR SIGN AND CONE SPACING AND TAPER LENGTH

GENERAL NOTES

For hours of darkness, change cones to vertical barricades with steady burn lights.

This plan DOES NOT apply at signalized or multi-way stop intersections. Consult the local jurisdiction when preparing Traffic Control Plans near these intersections.

This plan MAY NOT apply when the work areas affect bike lanes, sidewalks, pedestrian access, and curved or narrow roadways. Consult the approving agency when preparing the Traffic Control Plan for these areas.

Nothing contained on this drawing shall prevent local jurisdictions from modifying changing, or adopting new specifications deemed necessary. Criteria for position, location, and use of Traffic Control Devices is solely for the purpose of guidance to assist in the set up of the Traffic Control Plans.

TC-5 is required for all Traffic Control Plans.

APPENDIX "A"
SAN DIEGO REGIONAL STANDARD

SIDE OF ROAD WORK AREA

MULTILANE TRAFFIC CONTROL WITH CENTERLINE
RIGHT TRAFFIC LANE CLOSURE - ONE LANE

DRAWING NUMBER TC-10

Revision	By	Approved	Date
DRAWING	DWY		4-91
DRAWING	FKM		8-91
ORIG.			10-8-91

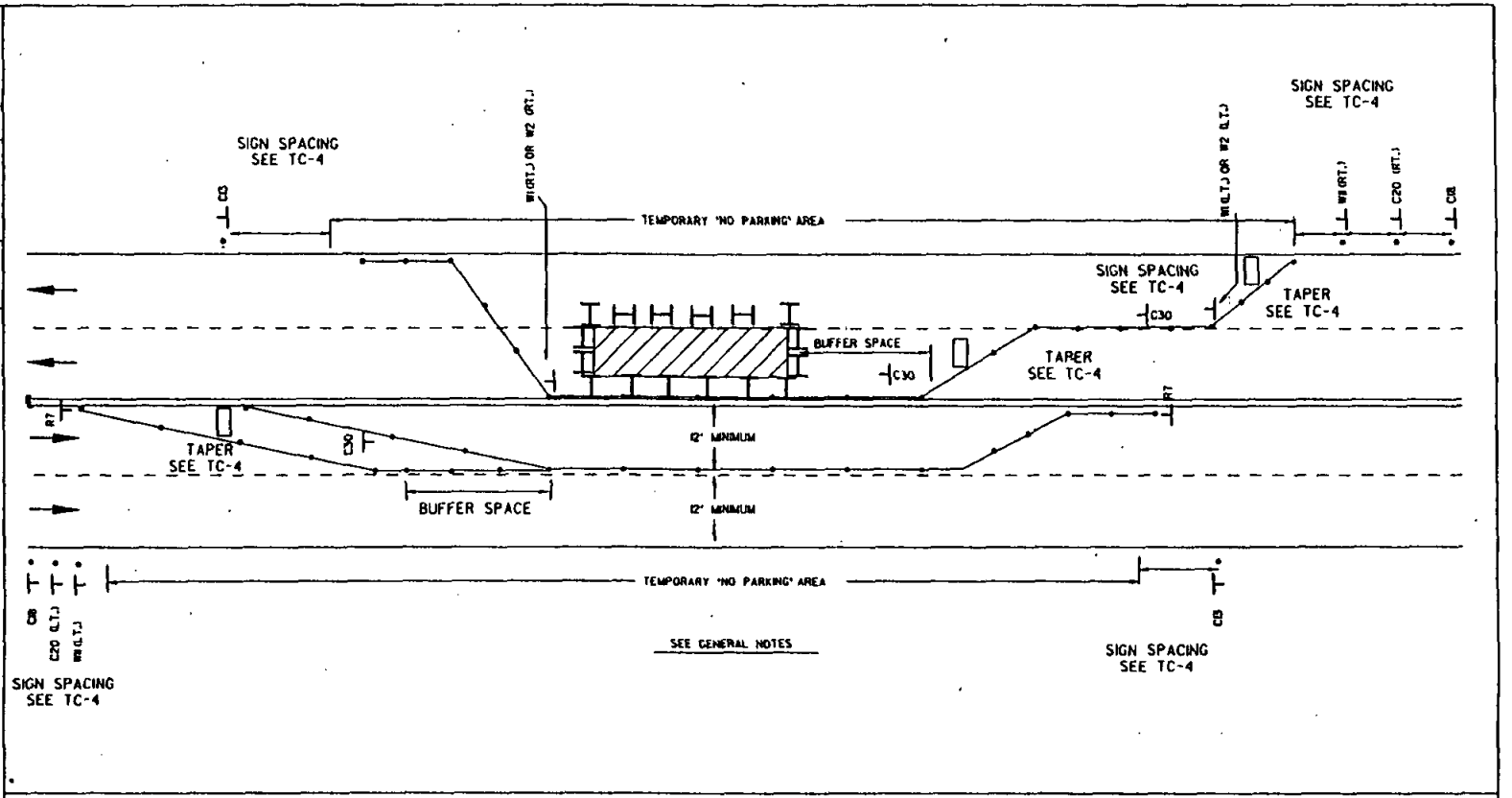

LEGEND

CONE | BARRICADE | FLAGGER | SIGN | FLASHING ARROW SIGN | WORK AREA | TRAFFIC DIRECTION

TRAFFIC ENGINEERS COMMENTS

SUBMITTED BY:
NAME
AGENCY
ADDRESS
PHONE

POSTED SPEED LIMIT	APPROACH SPEED	TAPER LENGTH	SPACING OF CONES	SIGN SPACING

SEE TC-4 FOR SIGN AND CONE SPACING AND TAPER LENGTH

GENERAL NOTES

For hours of darkness, change cones to vertical barricades with steady burn lights.

This plan DOES NOT apply at signalized or multi-way stop intersections. Consult the local jurisdiction when preparing Traffic Control Plans near these intersections.

This plan MAY NOT apply when the work areas affect bike lanes, sidewalks, pedestrian access, and curved or narrow roadways. Consult the approving agency when preparing the Traffic Control Plan for these areas.

Nothing contained on this drawing shall prevent local jurisdictions from modifying changing, or adopting new specifications deemed necessary. Criteria for position, location, and use of Traffic Control Devices is solely for the purpose of guidance to assist in the set up of the Traffic Control Plans.

TC-5 is required for all Traffic Control Plans.

Revision	By	Approved	Date
DRAWING	DWV		4-91
DRAWING	FMM		8-91
ORIG.			10-9-91
			11-18-91

APPENDIX "A"
SAN DIEGO REGIONAL STANDARD

SIDE OF ROAD WORK AREA

MULTILANE TRAFFIC CONTROL WITH CENTERLINE
RIGHT TRAFFIC LANE CLOSURE - TWO LANES

DRAWING NUMBER TC-11

DRAWING NUMBER TC-12

CENTER OF ROAD WORK AREA

MULTILANE TRAFFIC CONTROL WITH CENTERLINE

LEFT TRAFFIC LANE CLOSURE - ONE LANE

APPENDIX "A"

SAN DIEGO REGIONAL STANDARD

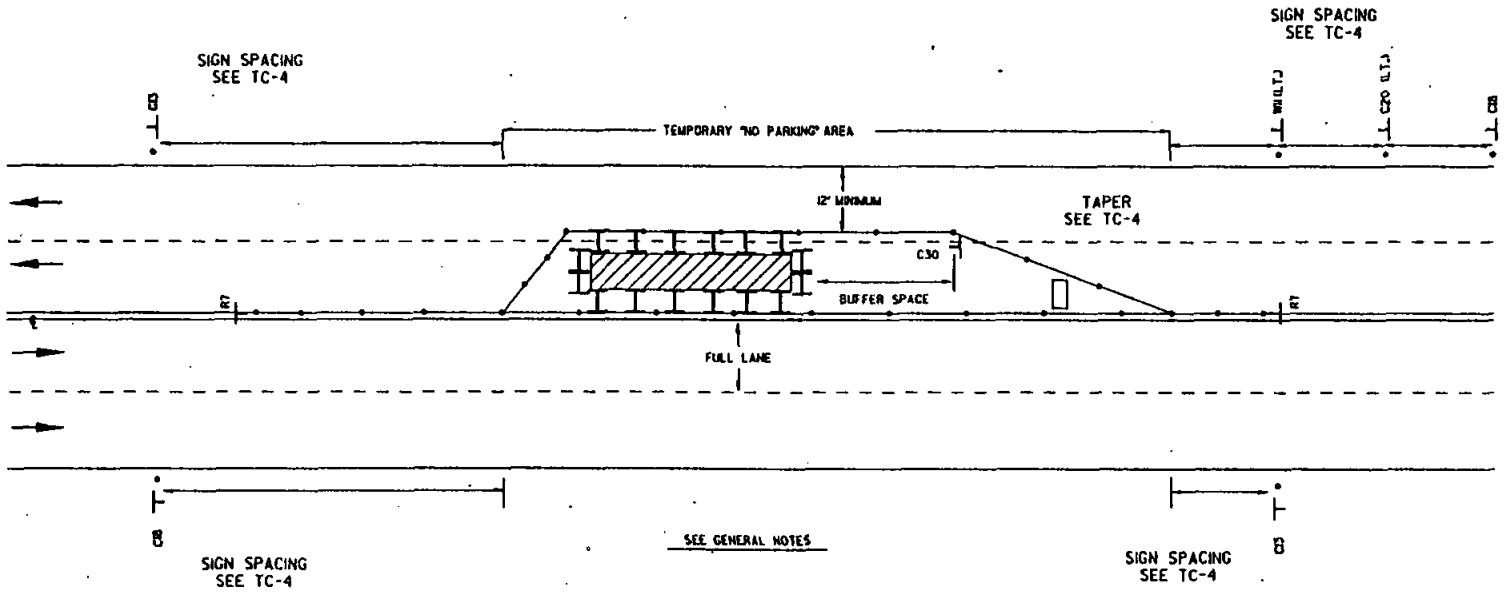

LEGEND

CONE | BARRICADE | FLAGGER | SIGN | FLASHING ARROW SIGN | WORK AREA | TRAFFIC DIRECTION

TRAFFIC ENGINEERS COMMENTS

SUBMITTED BY:

NAME

AGENCY

ADDRESS

PHONE

POSTED SPEED LIMIT	APPROACH SPEED	TAPER LENGTH	SPACING OF CONES	SIGN SPACING

SEE TC-4 FOR SIGN AND CONE SPACING AND TAPER LENGTH

GENERAL NOTES

For hours of darkness, change cones to vertical barricades with steady burn lights.

This plan DOES NOT apply at signalized or multi-way stop intersections. Consult the local jurisdiction when preparing Traffic Control Plans near these intersections.

This plan MAY NOT apply when the work areas affect bike lanes, sidewalks, pedestrian access, and curved or narrow roadways. Consult the approving agency when preparing the Traffic Control Plan for these areas.

Nothing contained on this drawing shall prevent local jurisdictions from modifying changing, or adopting new specifications deemed necessary. Criteria for position, location, and use of Traffic Control Devices is solely for the purpose of guidance to assist in the set up of the Traffic Control Plans.

TC-5 is required for all Traffic Control Plans.

Revision	By	Approved	Date
DRAWING	DWV		4-91
DRAWING	FVM		8-91
ORIG.			10-8-91

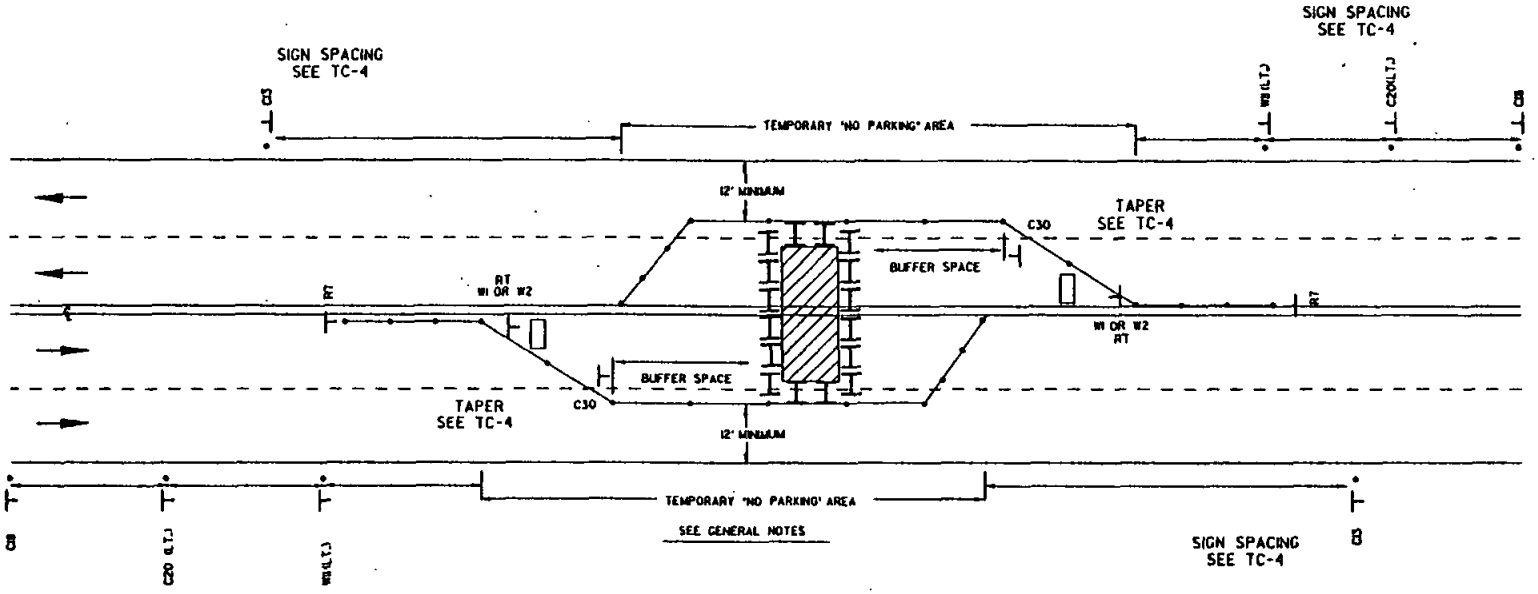

LEGEND

● CONE | H BARRICADE | FLAGGER | SIGN | FLASHING ARROW SIGN | WORK AREA | TRAFFIC DIRECTION

TRAFFIC ENGINEERS COMMENTS

SUBMITTED BY:
NAME
AGENCY
ADDRESS
PHONE

POSTED SPEED LIMIT	APPROACH SPEED	TAPER LENGTH	SPACING OF CONES	SIGN SPACING

SEE TC-4 FOR SIGN AND CONE SPACING AND TAPER LENGTH

GENERAL NOTES

For hours of darkness, change cones to vertical barricades with steady burn lights.

This plan DOES NOT apply at signalized or multi-way stop intersections. Consult the local jurisdiction when preparing Traffic Control Plans near these intersections.

This plan MAY NOT apply when the work areas affect bike lanes, sidewalks, pedestrian access, and curved or narrow roadways. Consult the approving agency when preparing the Traffic Control Plan for these areas.

Nothing contained on this drawing shall prevent local jurisdictions from modifying changing, or adopting new specifications deemed necessary. Criteria for position, location, and use of Traffic Control Devices is solely for the purpose of guidance to assist in the set up of the Traffic Control Plans.

TC-5 is required for all Traffic Control Plans.

Revision	By	Approved	Date
DRAWING	DWV		4-91
DRAWING	FMM		8-91
ORIG.			10-8-91

APPENDIX "A"
SAN DIEGO REGIONAL STANDARD

CENTER OF ROAD WORK AREA

MULTILANE TRAFFIC CONTROL WITH CENTERLINE
LEFT TRAFFIC LANE CLOSURE - TWO LANES

DRAWING NUMBER TC-13

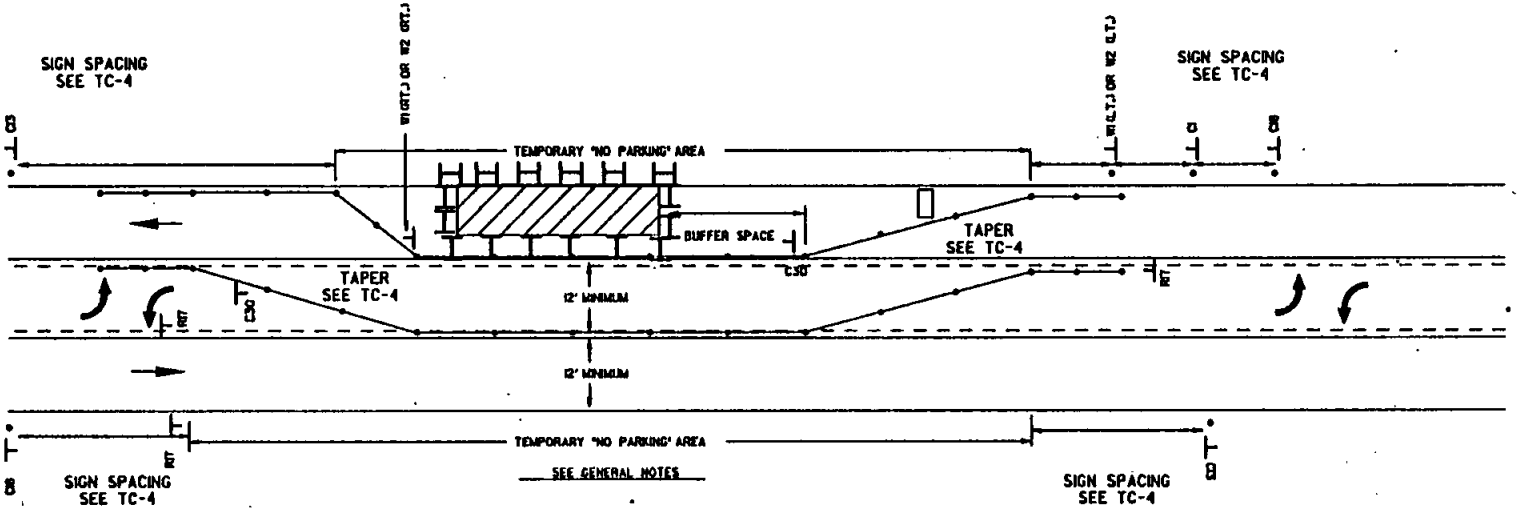

LEGEND

● CONE | BARRICADE | FLAGGER | SIGN | FLASHING ARROW SIGN | WORK AREA | TRAFFIC DIRECTION

TRAFFIC ENGINEERS COMMENTS

SUBMITTED BY:
NAME
AGENCY
ADDRESS
PHONE

POSTED SPEED LIMIT	APPROACH SPEED	TAPER LENGTH	SPACING OF CONES	SIGN SPACING

SEE TC-4 FOR SIGN AND CONE SPACING AND TAPER LENGTH

GENERAL NOTES

For hours of darkness, change cones to vertical barricades with steady burn lights.

This plan DOES NOT apply at signalized or multi-way stop intersections. Consult the local jurisdiction when preparing Traffic Control Plans near these intersections.

This plan MAY NOT apply when the work areas affect bike lanes, sidewalks, pedestrian access, and curved or narrow roadways. Consult the approving agency when preparing the Traffic Control Plan for these areas.

Nothing contained on this drawing shall prevent local jurisdictions from modifying changing, or adopting new specifications deemed necessary. Criteria for position, location, and use of Traffic Control Devices is solely for the purpose of guidance to assist in the set up of the Traffic Control Plans.

TC-5 is required for all Traffic Control Plans.

SIDE OF ROAD WORK AREA

MULTILANE TRAFFIC CONTROL WITH TWO WAY LEFT TURN
RIGHT LANE TRAFFIC CLOSURE - ONE LANE

APPENDIX "A"
SAN DIEGO REGIONAL STANDARD

DRAWING NUMBER TC-14

Revision	By	Approved	Date
DRAWING	DWV		4-91
DRAWING	FMM		8-91
ORIG.			10-9-91
			11-18-91
			4-2-92

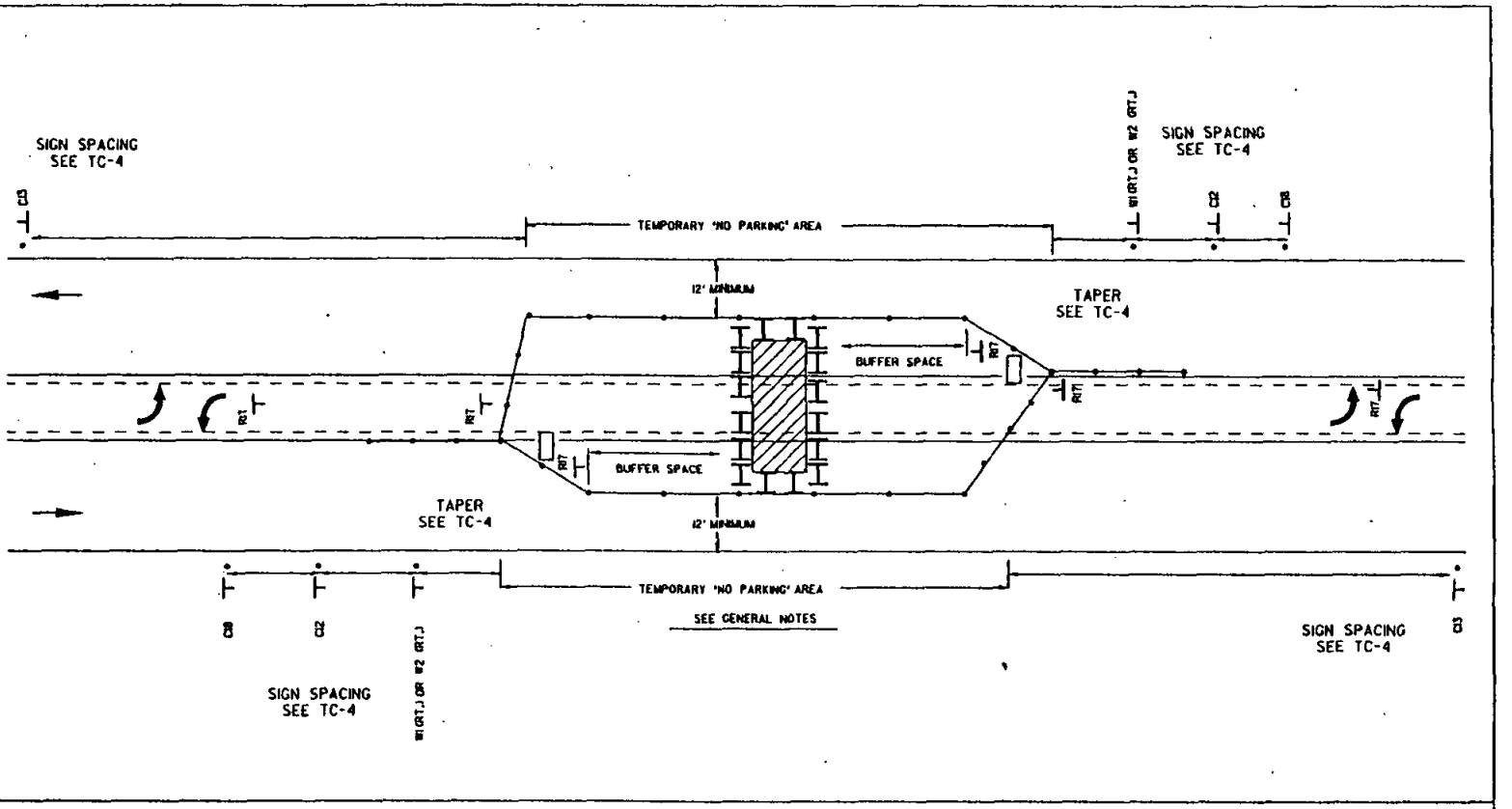

LEGEND

CONE | BARRICADE | FLAGGER | SIGN | FLASHING ARROW SIGN | WORK AREA | TRAFFIC DIRECTION

TRAFFIC ENGINEERS COMMENTS

POSTED SPEED LIMIT	APPROACH SPEED	TAPER LENGTH	SPACING OF CONES	SIGN SPACING

SEE TC-4 FOR SIGN AND CONE SPACING AND TAPER LENGTH

SUBMITTED BY:
NAME
AGENCY
ADDRESS
PHONE

GENERAL NOTES

For hours of darkness, change cones to vertical barricades with steady burn lights.

This plan DOES NOT apply at signalized or multi-way stop intersections. Consult the local jurisdiction when preparing Traffic Control Plans near these intersections.

This plan MAY NOT apply when the work areas affect bike lanes, sidewalks, pedestrian access, and curved or narrow roadways. Consult the approving agency when preparing the Traffic Control Plan for these areas.

Nothing contained on this drawing shall prevent local jurisdictions from modifying changing, or adopting new specifications deemed necessary. Criteria for position, location, and use of Traffic Control Devices is solely for the purpose of guidance to assist in the set up of the Traffic Control Plans.

TC-5 is required for all Traffic Control Plans.

Revision	By	Approved	Date
DRAWING	DWV		4-91
DRAWING	PMM		8-91
ORIG.			10-8-91

APPENDIX "A"
SAN DIEGO REGIONAL STANDARD

CENTER OF ROAD WORK AREA

MULTILANE TRAFFIC CONTROL WITH CENTERLINE
LEFT LANE CLOSURE - ONE LANE

DRAWING NUMBER TC-15

DRAWING NUMBER TC-16

SIDE OF ROAD WORK AREA

MULTILANE TRAFFIC CONTROL WITH TWO WAY LEFT TURN
RIGHT TRAFFIC LANE CLOSURE - ONE LANE

APPENDIX "A"
SAN DIEGO REGIONAL STANDARD

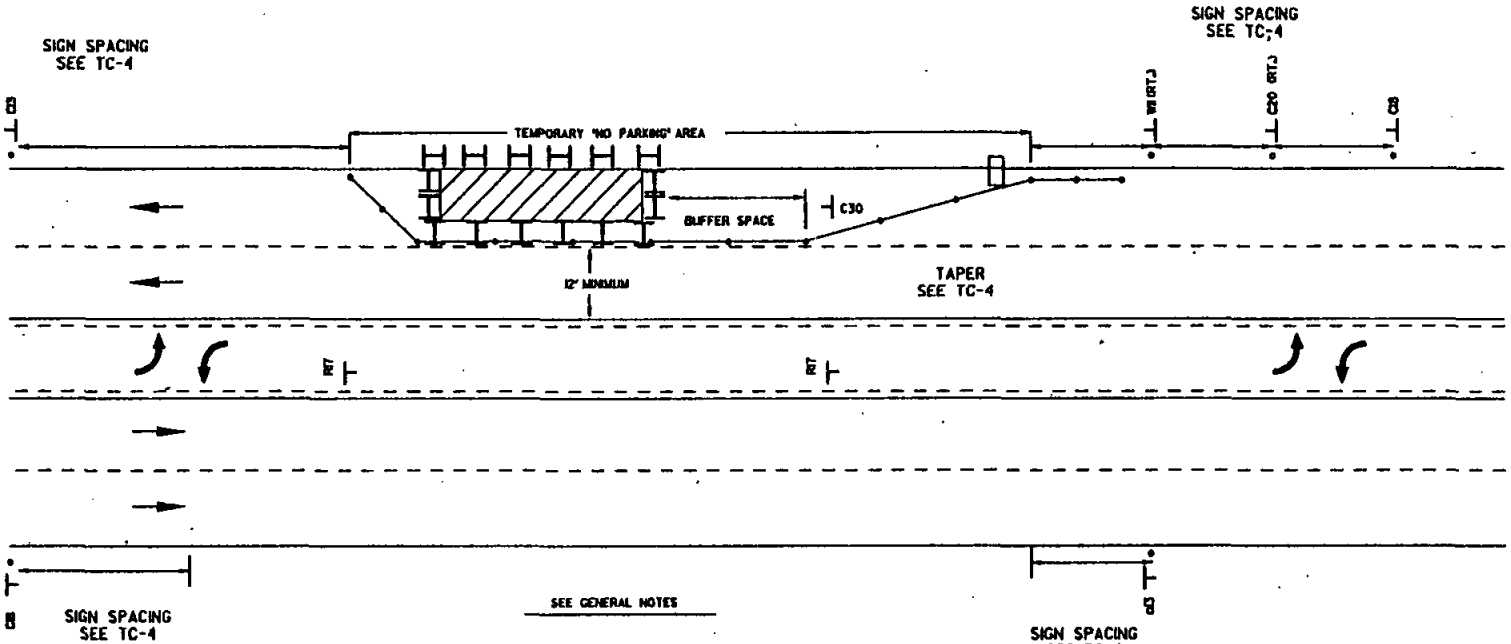

LEGEND

CONE | BARRICADE | FLAGGER | SIGN | FLASHING ARROW SIGN | WORK AREA | TRAFFIC DIRECTION

TRAFFIC ENGINEERS COMMENTS

SUBMITTED BY:
NAME
AGENCY
ADDRESS
PHONE

POSTED SPEED LIMIT	APPROACH SPEED	TAPER LENGTH	SPACING OF CONES	SIGN SPACING

SEE TC-4 FOR SIGN AND CONE SPACING AND TAPER LENGTH

GENERAL NOTES

For hours of darkness, change cones to vertical barricades with steady burn lights.

This plan DOES NOT apply at signalized or multi-way stop intersections. Consult the local jurisdiction when preparing Traffic Control Plans near these intersections.

This plan MAY NOT apply when the work areas affect bike lanes, sidewalks, pedestrian access, and curved or narrow roadways. Consult the approving agency when preparing the Traffic Control Plan for these areas.

Nothing contained on this drawing shall prevent local jurisdictions from modifying changing, or adopting new specifications deemed necessary. Criteria for position, location, and use of Traffic Control Devices is solely for the purpose of guidance to assist in the set up of the Traffic Control Plans.

TC-5 is required for all Traffic Control Plans.

Revision	By	Approved	Date
DRAWING	DMV		4-91
DRAWING	FMM		8-91
ORIG.			10-8-91
			4-2-92

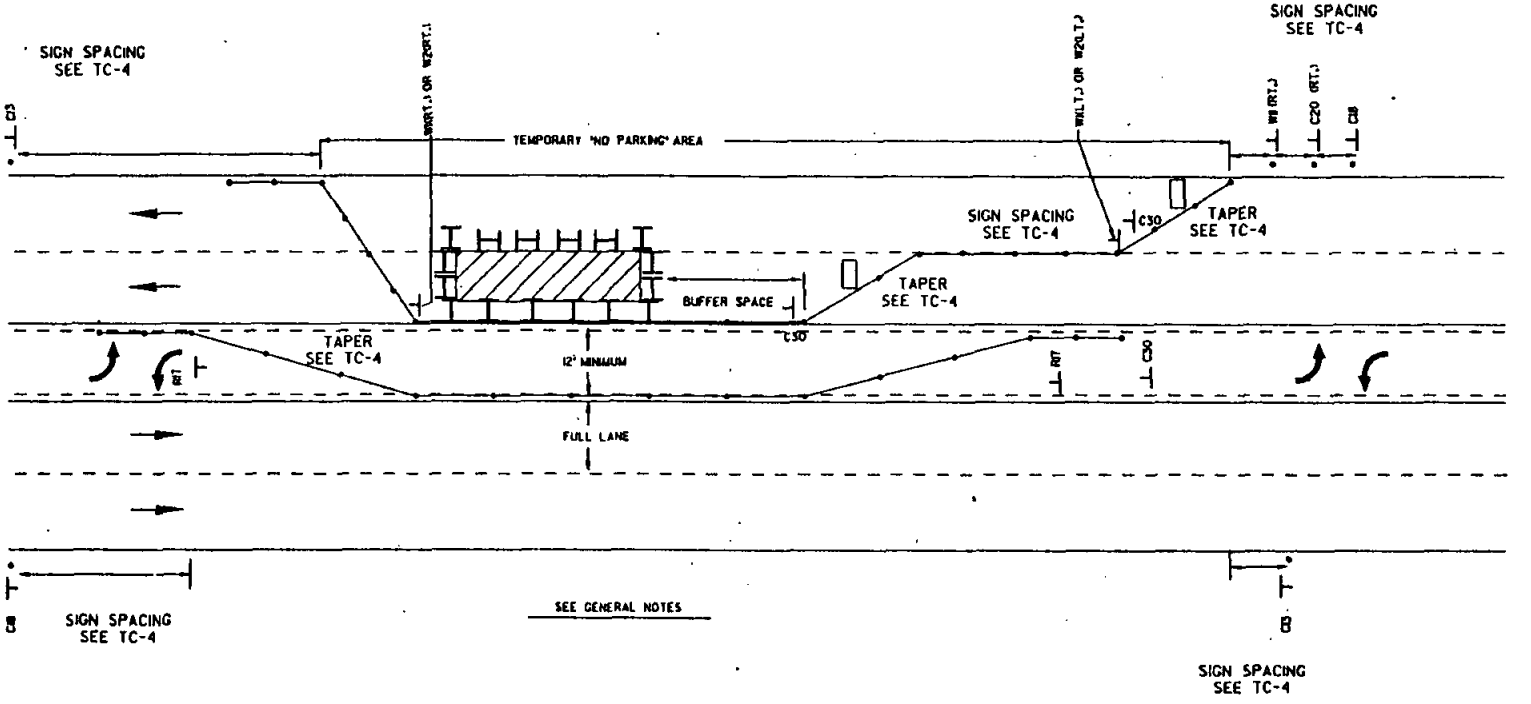

LEGEND

CONE | BARRICADE | FLAGGER | SIGN | FLASHING ARROW SIGN | WORK AREA | TRAFFIC DIRECTION

TRAFFIC ENGINEERS COMMENTS

SUBMITTED BY:
NAME
AGENCY
ADDRESS
PHONE

POSTED SPEED LIMIT	APPROACH SPEED	TAPER LENGTH	SPACING OF CONES	SIGN SPACING

SEE TC-4 FOR SIGN AND CONE SPACING AND TAPER LENGTH

GENERAL NOTES

For hours of darkness, change cones to vertical barricades with steady burn lights.

This plan DOES NOT apply at signalized or multi-way stop intersections. Consult the local jurisdiction when preparing Traffic Control Plans near these intersections.

This plan MAY NOT apply when the work areas affect bike lanes, sidewalks, pedestrian access, and curved or narrow roadways. Consult the approving agency when preparing the Traffic Control Plan for these areas.

Nothing contained on this drawing shall prevent local jurisdictions from modifying changing, or adopting new specifications deemed necessary. Criteria for position, location, and use of Traffic Control Devices is solely for the purpose of guidance to assist in the set up of the Traffic Control Plans.

TC-5 is required for all Traffic Control Plans.

Revision	By	Approved	Date
DRAWING	DWV		4-91
DRAWING	FMM		8-91
ORIG.			10-9-91
			11-18-91
			1-2-92

APPENDIX "A"
SAN DIEGO REGIONAL STANDARD

SIDE OF ROAD WORK AREA

MULTILANE TRAFFIC CONTROL WITH TWO WAY LEFT TURN
RIGHT TRAFFIC LANE CLOSURE - TWO LANES

DRAWING NUMBER TC-17

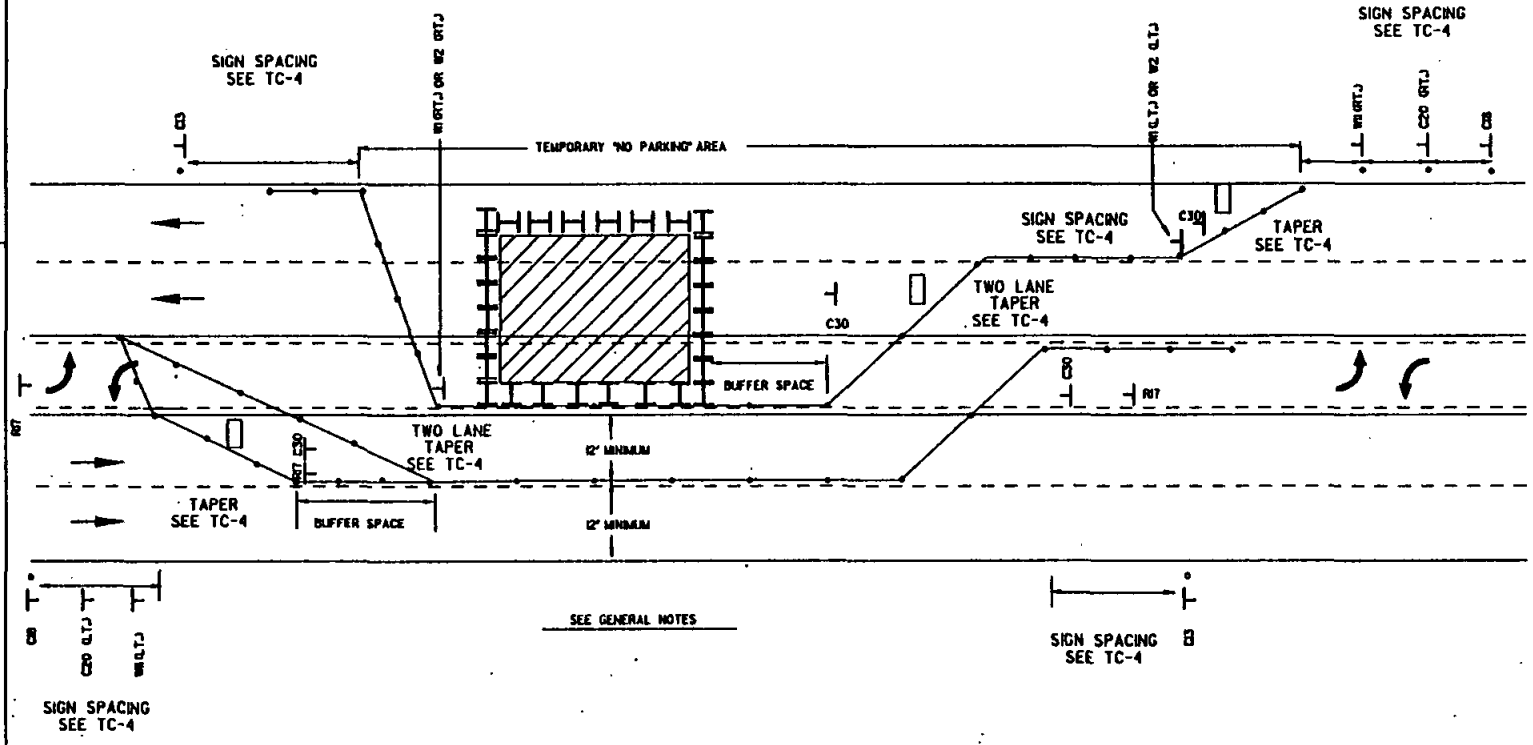

LEGEND

● CONE | ⊢ BARRICADE | ⚑ FLAGGER | ⊢ SIGN | ▯ FLASHING ARROW SIGN | ▨ WORK AREA | ← → TRAFFIC DIRECTION

TRAFFIC ENGINEERS COMMENTS

SUBMITTED BY:
NAME
AGENCY
ADDRESS
PHONE

POSTED SPEED LIMIT	APPROACH SPEED	TAPER LENGTH	SPACING OF CONES	SIGN SPACING

SEE TC-4 FOR SIGN AND CONE SPACING AND TAPER LENGTH

GENERAL NOTES

For hours of darkness, change cones to vertical barricades with steady burn lights.

This plan DOES NOT apply at signalized or multi-way stop intersections. Consult the local jurisdiction when preparing Traffic Control Plans near these intersections.

This plan MAY NOT apply when the work areas affect bike lanes, sidewalks, pedestrian access, and curved or narrow roadways. Consult the approving agency when preparing the Traffic Control Plan for these areas.

Nothing contained on this drawing shall prevent local jurisdictions from modifying changing, or adopting new specifications deemed necessary. Criteria for position, location, and use of Traffic Control Devices is solely for the purpose of guidance to assist in the set up of the Traffic Control Plans.

TC-5 is required for all Traffic Control Plans.

SIDE OF ROAD WORK AREA

MULTILANE TRAFFIC CONTROL WITH TWO WAY LEFT TURN
RIGHT TRAFFIC LANE CLOSURE - THREE LANES

APPENDIX "A"
SAN DIEGO REGIONAL STANDARD

DRAWING NUMBER TC-18

Revision	By	Approved	Date
DRAWING	DRV		4-91
DRAWING	FLAM		8-91
ORIG.			10-9-91
			11-18-91

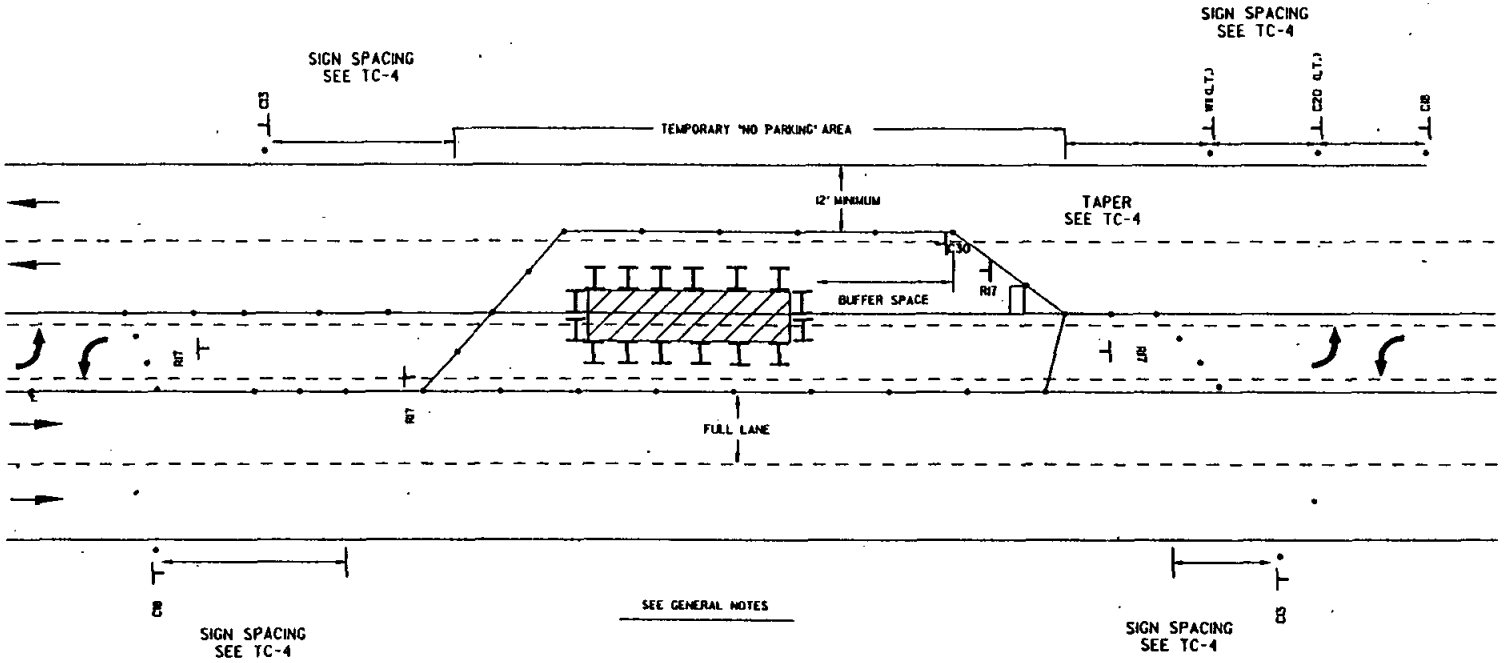

LEGEND

CONE | BARRICADE | FLAGGER | SIGN | FLASHING ARROW SIGN | WORK AREA | TRAFFIC DIRECTION

TRAFFIC ENGINEERS COMMENTS

SUBMITTED BY:
NAME
AGENCY
ADDRESS
PHONE

POSTED SPEED LIMIT	APPROACH SPEED	TAPER LENGTH	SPACING OF CONES	SIGN SPACING

SEE TC-4 FOR SIGN AND CONE SPACING AND TAPER LENGTH

GENERAL NOTES

For hours of darkness, change cones to vertical barricades with steady burn lights.

This plan DOES NOT apply at signalized or multi-way stop intersections. Consult the local jurisdiction when preparing Traffic Control Plans near these intersections.

This plan MAY NOT apply when the work areas affect bike lanes, sidewalks, pedestrian access, and curved or narrow roadways. Consult the approving agency when preparing the Traffic Control Plan for these areas.

Nothing contained on this drawing shall prevent local jurisdictions from modifying changing, or adopting new specifications deemed necessary. Criteria for position, location, and use of Traffic Control Devices is solely for the purpose of guidance to assist in the set up of the Traffic Control Plans.

TC-5 is required for all Traffic Control Plans.

Revision	By	Approved	Date
DRAWING	DWV		4-91
DRAWING	FMM		8-91
ORIG.			10-8-91

APPENDIX "A"
SAN DIEGO REGIONAL STANDARD

CENTER OF ROAD WORK AREA

MULTILANE TRAFFIC CONTROL WITH TWO WAY LEFT TURN
LEFT TRAFFIC LANE CLOSURE - TWO LANES

DRAWING NUMBER TC-19

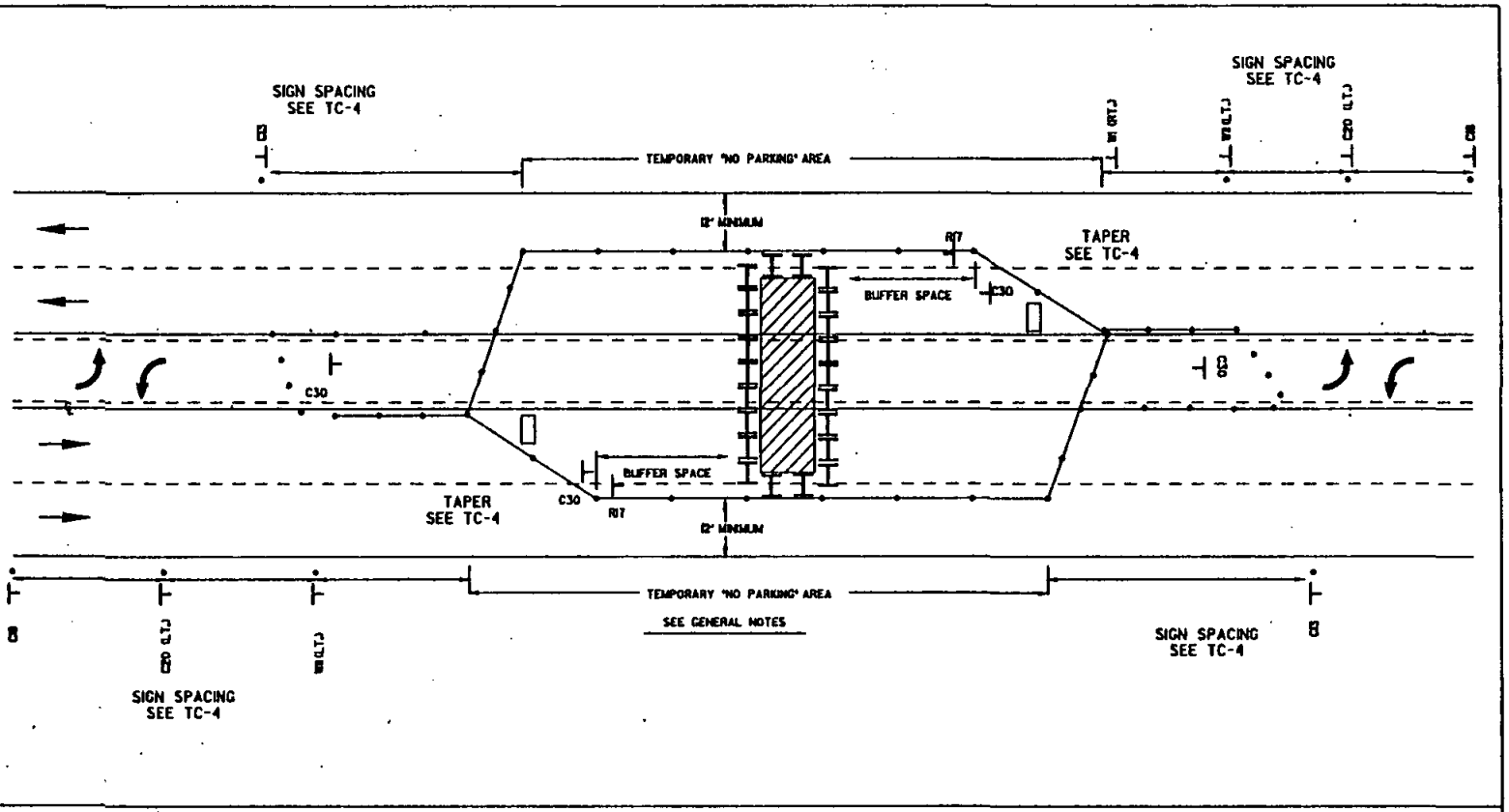

LEGEND

● CONE · ⊢⊣ BARRICADE · ⚑ FLAGGER · ⊢ SIGN · ▯ FLASHING ARROW SIGN · ▨ WORK AREA · ← TRAFFIC DIRECTION

TRAFFIC ENGINEERS COMMENTS

SUBMITTED BY:
NAME
AGENCY
ADDRESS
PHONE

POSTED SPEED LIMIT	APPROACH SPEED	TAPER LENGTH	SPACING OF CONES	SIGN SPACING

SEE TC-4 FOR SIGN AND CONE SPACING AND TAPER LENGTH

GENERAL NOTES

For hours of darkness, change cones to vertical barricades with steady burn lights.

This plan DOES NOT apply at signalized or multi-way stop intersections. Consult the local jurisdiction when preparing Traffic Control Plans near these intersections.

This plan MAY NOT apply when the work areas affect bike lanes, sidewalks, pedestrian access, and curved or narrow roadways. Consult the approving agency when preparing the Traffic Control Plan for these areas.

Nothing contained on this drawing shall prevent local jurisdictions from modifying changing, or adopting new specifications deemed necessary. Criteria for position, location, and use of Traffic Control Devices is solely for the purpose of guidance to assist in the set up of the Traffic Control Plans.

TC-5 is required for all Traffic Control Plans.

APPENDIX "A"
SAN DIEGO REGIONAL STANDARD

CENTER OF ROAD WORK AREA

MULTILANE TRAFFIC CONTROL WITH CENTERLINE
LEFT LANE TRAFFIC LANE CLOSURE - THREE LANES

DRAWING NUMBER TC-20

Revision	By	Approved	Date
DRAWING	DRW		4-91
DRAWING	FMM		8-91
ORIG.			10-8-91

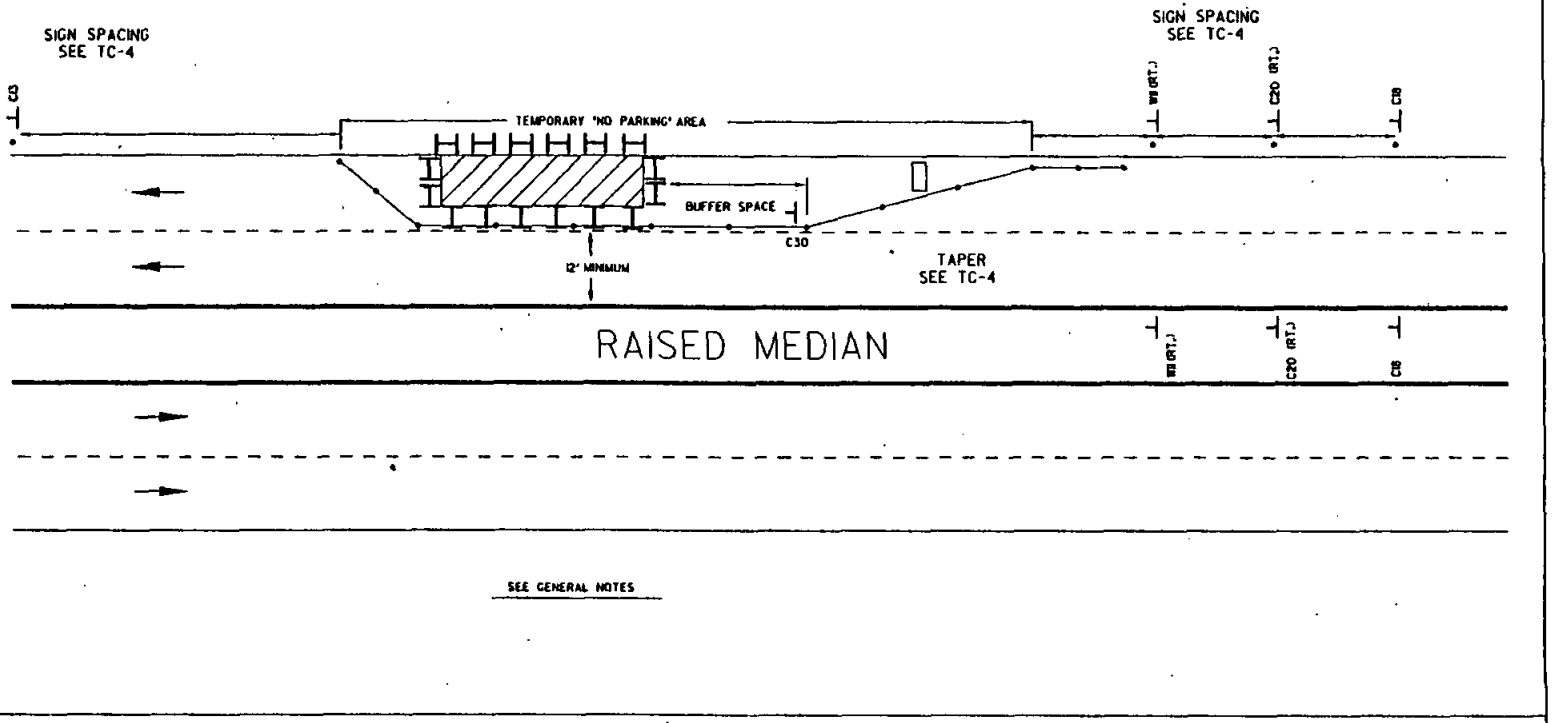

LEGEND

● CONE | H BARRICADE | FLAGGER | SIGN | FLASHING ARROW SIGN | WORK AREA | TRAFFIC DIRECTION

TRAFFIC ENGINEERS COMMENTS

SUBMITTED BY:
NAME
AGENCY
ADDRESS
PHONE

POSTED SPEED LIMIT	APPROACH SPEED	TAPER LENGTH	SPACING OF CONES	SIGN SPACING

SEE TC-4 FOR SIGN AND CONE SPACING AND TAPER LENGTH

GENERAL NOTES

For hours of darkness, change cones to vertical barricades with steady burn lights.

This plan DOES NOT apply at signalized or multi-way stop intersections. Consult the local jurisdiction when preparing Traffic Control Plans near these intersections.

This plan MAY NOT apply when the work areas affect bike lanes, sidewalks, pedestrian access, and curved or narrow roadways. Consult the approving agency when preparing the Traffic Control Plan for these areas.

Nothing contained on this drawing shall prevent local jurisdictions from modifying changing, or adopting new specifications deemed necessary. Criteria for position, location, and use of Traffic Control Devices is solely for the purpose of guidance to assist in the set up of the Traffic Control Plans.

TC-5 is required for all Traffic Control Plans.

Revision	By	Approved	Date
DRAWING	DRV		4-91
DRAWING	PMM		8-91
ORIG.			10-8-91

APPENDIX "A"
SAN DIEGO REGIONAL STANDARD

SIDE OF ROAD WORK AREA

MULTILANE TRAFFIC CONTROL WITH RAISED MEDIAN
RIGHT TRAFFIC LANE CLOSURE - ONE LANE

DRAWING NUMBER TC-21

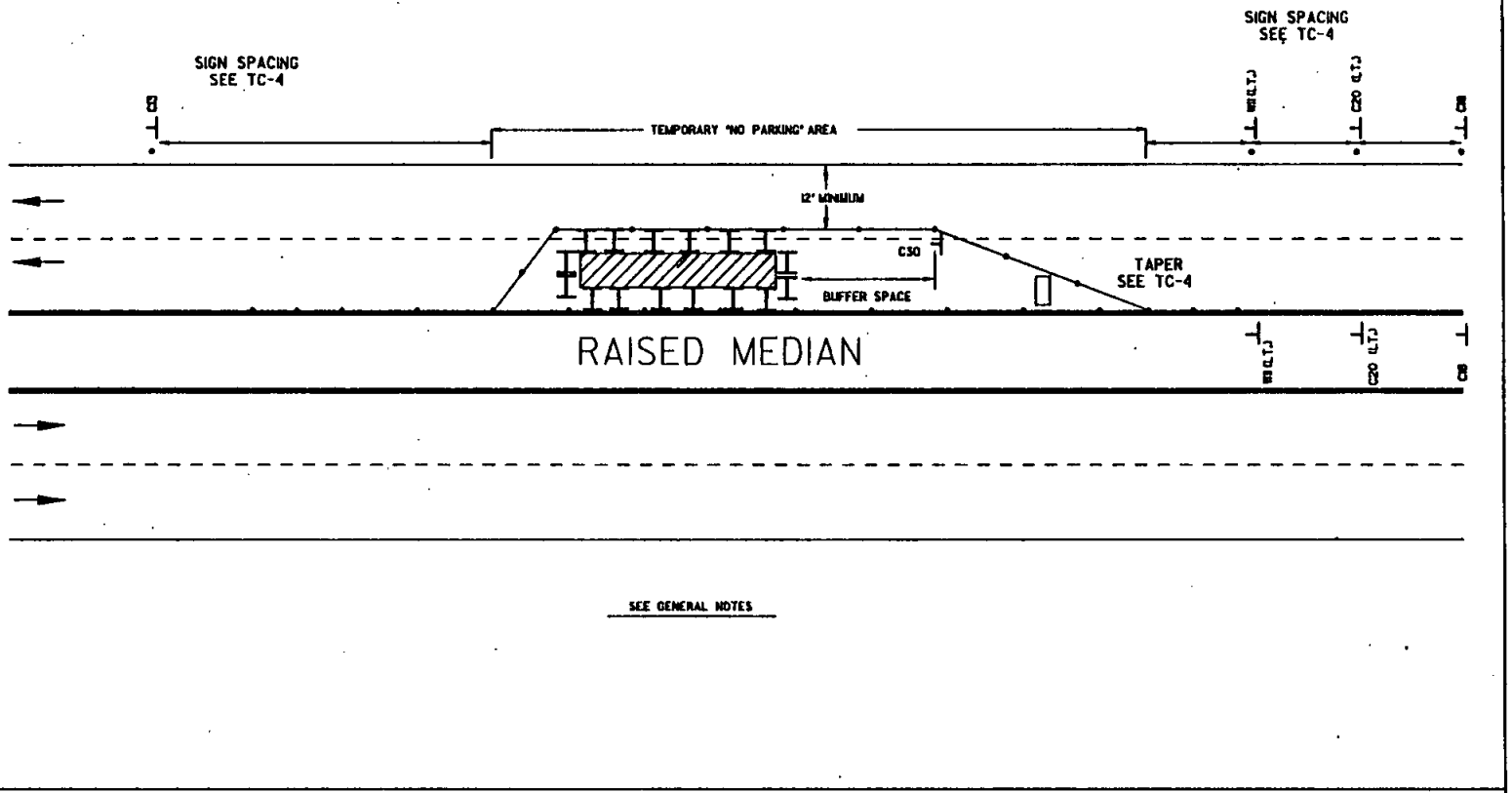

LEGEND

● CONE | H BARRICADE | ⚑ FLAGGER | ⊢ SIGN | ▯ FLASHING ARROW SIGN | ▨ WORK AREA | ← → TRAFFIC DIRECTION

TRAFFIC ENGINEERS COMMENTS

SUBMITTED BY:
NAME
AGENCY
ADDRESS
PHONE

POSTED SPEED LIMIT	APPROACH SPEED	TAPER LENGTH	SPACING OF CONES	SIGN SPACING

SEE TC-4 FOR SIGN AND CONE SPACING AND TAPER LENGTH

GENERAL NOTES

For hours of darkness, change cones to vertical barricades with steady burn lights.

This plan DOES NOT apply at signalized or multi-way stop intersections. Consult the local jurisdiction when preparing Traffic Control Plans near these intersections.

This plan MAY NOT apply when the work areas affect bike lanes, sidewalks, pedestrian access, and curved or narrow roadways. Consult the approving agency when preparing the Traffic Control Plan for these areas.

Nothing contained on this drawing shall prevent local jurisdictions from modifying changing, or adopting new specifications deemed necessary. Criteria for position, location, and use of Traffic Control Devices is solely for the purpose of guidance to assist in the set up of the Traffic Control Plans.

TC-5 is required for all Traffic Control Plans.

CENTER OF ROAD WORK AREA

MULTILANE TRAFFIC CONTROL WITH RAISED MEDIAN
LEFT TRAFFIC LANE CLOSURE - ONE LANE

APPENDIX "A"
SAN DIEGO REGIONAL STANDARD

DRAWING NUMBER TC-22

Revision	By	Approved	Date
DRAWING	DRW		4-91
DRAWING	PMM		8-91
ORIG.			10-8-91

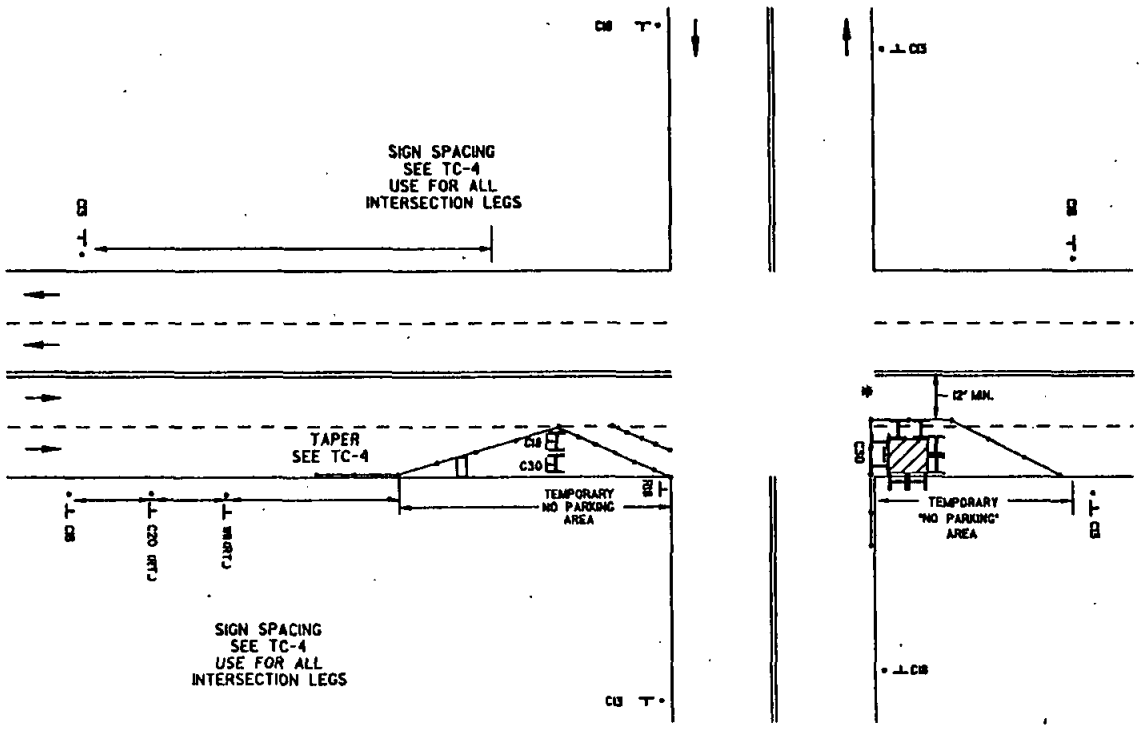

* LEFT OR RIGHT TURN MOVES MAY BE RESTRICTED.

LEGEND

CONE | BARRICADE | FLAGGER | SIGN | FLASHING ARROW SIGN | WORK AREA | TRAFFIC DIRECTION

TRAFFIC ENGINEERS COMMENTS

POSTED SPEED LIMIT	APPROACH SPEED	TAPER LENGTH	SPACING OF CONES	SIGN SPACING

SEE TC-4 FOR SIGN AND CONE SPACING AND TAPER LENGTH

SUBMITTED BY:
NAME
AGENCY
ADDRESS
PHONE

GENERAL NOTES

For hours of darkness, change cones to vertical barricades with steady burn lights.

This plan DOES NOT apply at signalized or multi-way stop intersections. Consult the local jurisdiction when preparing Traffic Control Plans near these intersections.

This plan MAY NOT apply when the work areas affect bike lanes, sidewalks, pedestrian access, and curved or narrow roadways. Consult the approving agency when preparing the Traffic Control Plan for these areas.

Nothing contained on this drawing shall prevent local jurisdictions from modifying changing, or adopting new specifications deemed necessary. Criteria for position, location, and use of Traffic Control Devices is solely for the purpose of guidance to assist in the set up of the Traffic Control Plans.

TC-5 is required for all Traffic Control Plans.

Revision	By	Approved	Date
DRAWING	CWV		4-91
DRAWING	FKM		8-91
ORIG.			10-8-91
			4-2-92

APPENDIX "A"
SAN DIEGO REGIONAL STANDARD

SIDE OF ROAD WORK AREA

INTERSECTION TRAFFIC CONTROL

DRAWING NUMBER TC-23

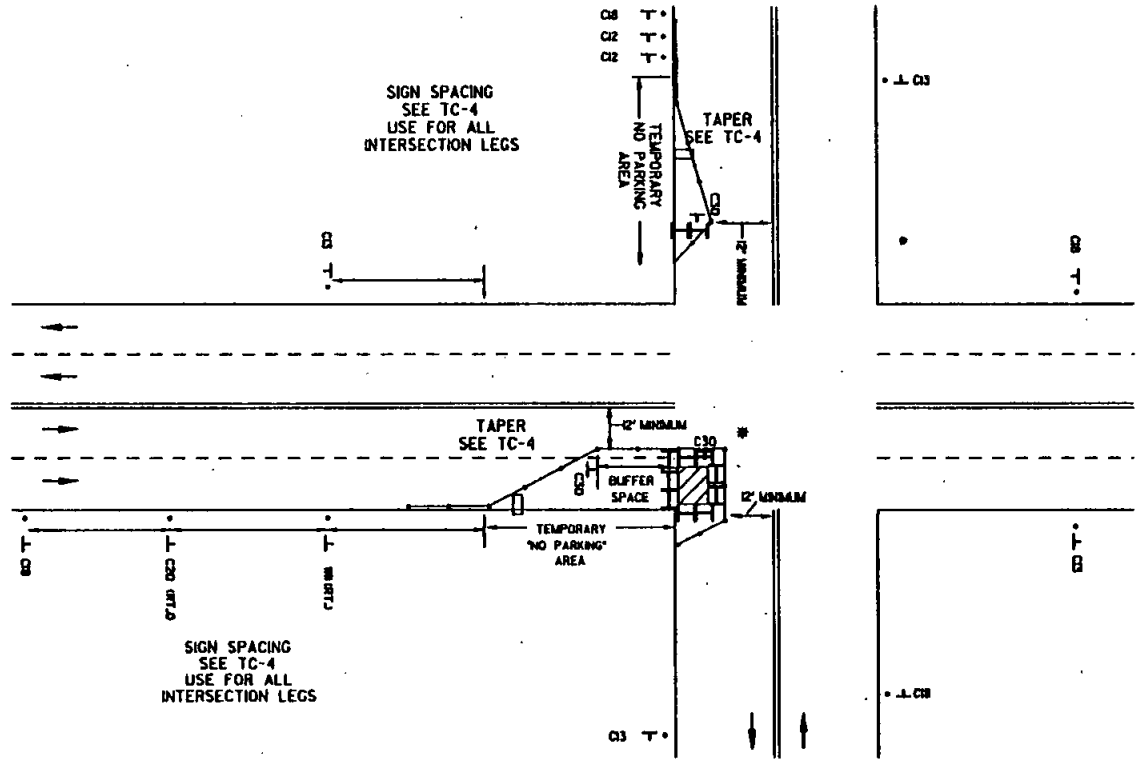

* RIGHT TURN MOVES MAY BE RESTRICTED.

LEGEND

● CONE | BARRICADE | FLAGGER | SIGN | FLASHING ARROW SIGN | WORK AREA | TRAFFIC DIRECTION

TRAFFIC ENGINEERS COMMENTS

SUBMITTED BY:
NAME
AGENCY
ADDRESS
PHONE

POSTED SPEED LIMIT	APPROACH SPEED	TAPER LENGTH	SPACING OF CONES	SIGN SPACING

SEE TC-4 FOR SIGN AND CONE SPACING AND TAPER LENGTH

GENERAL NOTES

For hours of darkness, change cones to vertical barricades with steady burn lights.

This plan DOES NOT apply at signalized or multi-way stop intersections. Consult the local jurisdiction when preparing Traffic Control Plans near these intersections.

This plan MAY NOT apply when the work areas affect bike lanes, sidewalks, pedestrian access, and curved or narrow roadways. Consult the approving agency when preparing the Traffic Control Plan for these areas.

Nothing contained on this drawing shall prevent local jurisdictions from modifying changing, or adopting new specifications deemed necessary. Criteria for position, location, and use of Traffic Control Devices is solely for the purpose of guidance to assist in the set up of the Traffic Control Plans.

TC-5 is required for all Traffic Control Plans.

DRAWING NUMBER TC-24

SIDE OF ROAD WORK AREA

INTERSECTION TRAFFIC CONTROL

APPENDIX "A"
SAN DIEGO REGIONAL STANDARD

Revision	By	Approved	Date
DRAWING	DRV		4-91
DRAWING	FMM		8-91
ORIG.			10-8-91

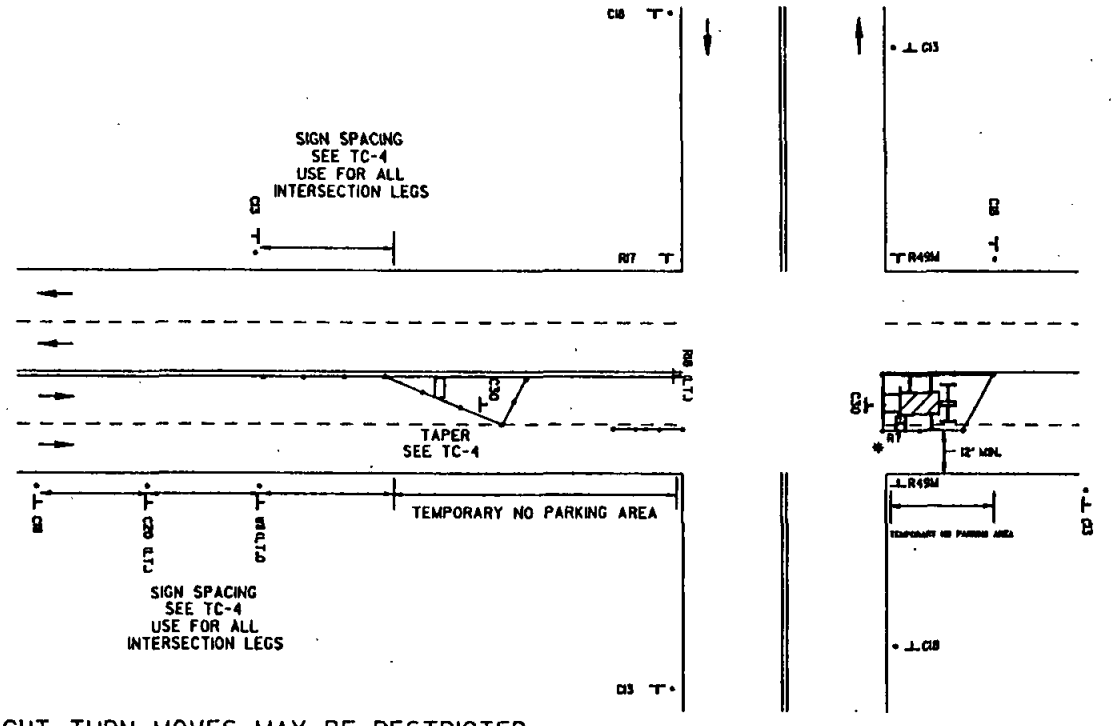

* LEFT OR RIGHT TURN MOVES MAY BE RESTRICTED.

LEGEND

CONE | BARRICADE | FLAGGER | SIGN | FLASHING ARROW SIGN | WORK AREA | TRAFFIC DIRECTION

TRAFFIC ENGINEERS COMMENTS

POSTED SPEED LIMIT	APPROACH SPEED	TAPER LENGTH	SPACING OF CONES	SIGN SPACING

SEE TC-4 FOR SIGN AND CONE SPACING AND TAPER LENGTH

SUBMITTED BY:
NAME
AGENCY
ADDRESS
PHONE

GENERAL NOTES

For hours of darkness, change cones to vertical barricades with steady burn lights.

This plan DOES NOT apply at signalized or multi-way stop intersections. Consult the local jurisdiction when preparing Traffic Control Plans near these intersections.

This plan MAY NOT apply when the work areas affect bike lanes, sidewalks, pedestrian access, and curved or narrow roadways. Consult the approving agency when preparing the Traffic Control Plan for these areas.

Nothing contained on this drawing shall prevent local jurisdictions from modifying changing, or adopting new specifications deemed necessary. Criteria for position, location, and use of Traffic Control Devices is solely for the purpose of guidance to assist in the set up of the Traffic Control Plans.

TC-5 is required for all Traffic Control Plans.

Revision	By	Approved	Date
DRAWING	DWV		4-91
DRAWING	PWM		8-91
ORIG.			10-8-91
			4-2-92

APPENDIX "A"
SAN DIEGO REGIONAL STANDARD

CENTER OF ROAD WORK AREA

INTERSECTION TRAFFIC CONTROL

DRAWING NUMBER TC-25

DRAWING NUMBER TC-26

CENTER OF ROAD WORK AREA

INTERSECTION TRAFFIC CONTROL

APPENDIX "A"
SAN DIEGO REGIONAL STANDARD

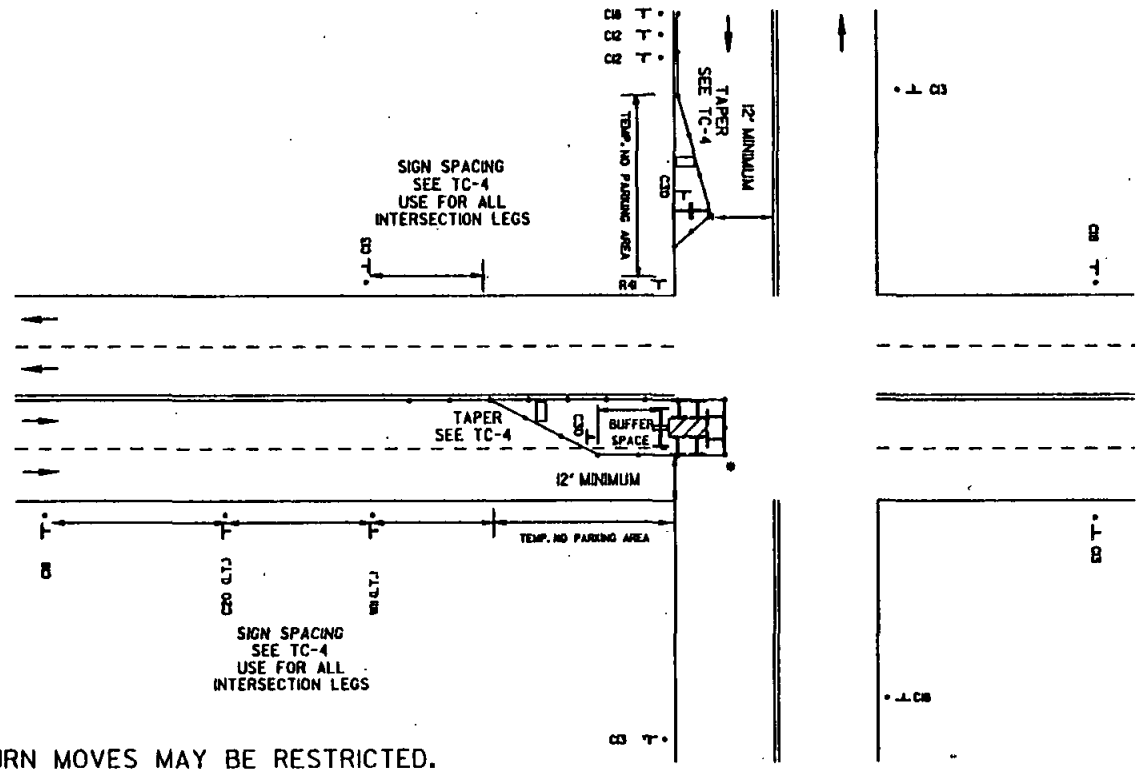

• LEFT TURN MOVES MAY BE RESTRICTED.

LEGEND

● CONE H BARRICADE FLAGGER SIGN FLASHING ARROW SIGN WORK AREA TRAFFIC DIRECTION

TRAFFIC ENGINEERS COMMENTS

SUBMITTED BY:
NAME
AGENCY
ADDRESS
PHONE

POSTED SPEED LIMIT	APPROACH SPEED	TAPER LENGTH	SPACING OF CONES	SIGN SPACING

SEE TC-4 FOR SIGN AND CONE SPACING AND TAPER LENGTH

GENERAL NOTES

For hours of darkness, change cones to vertical barricades with steady burn lights.

This plan DOES NOT apply at signalized or multi-way stop intersections. Consult the local jurisdiction when preparing Traffic Control Plans near these intersections.

This plan MAY NOT apply when the work areas affect bike lanes, sidewalks, pedestrian access, and curved or narrow roadways. Consult the approving agency when preparing the Traffic Control Plan for these areas.

Nothing contained on this drawing shall prevent local jurisdictions from modifying changing, or adopting new specifications deemed necessary. Criteria for position, location, and use of Traffic Control Devices is solely for the purpose of guidance to assist in the set up of the Traffic Control Plans.

TC-5 is required for all Traffic Control Plans.

Revision	By	Approved	Date
DRAWING	DRW		4-91
DRAWING	FWM		8-91
ORIG.			10-8-91
			11-18-91
			1-2-92

Revision	By	Approved	Date
DRAWING	DRY		4-91
DRAWING	FWM		8-91
ORIG.			10-8-91

CENTER OF ROAD WORK AREA

INTERSECTION TRAFFIC CONTROL

APPENDIX "A"
SAN DIEGO REGIONAL STANDARD

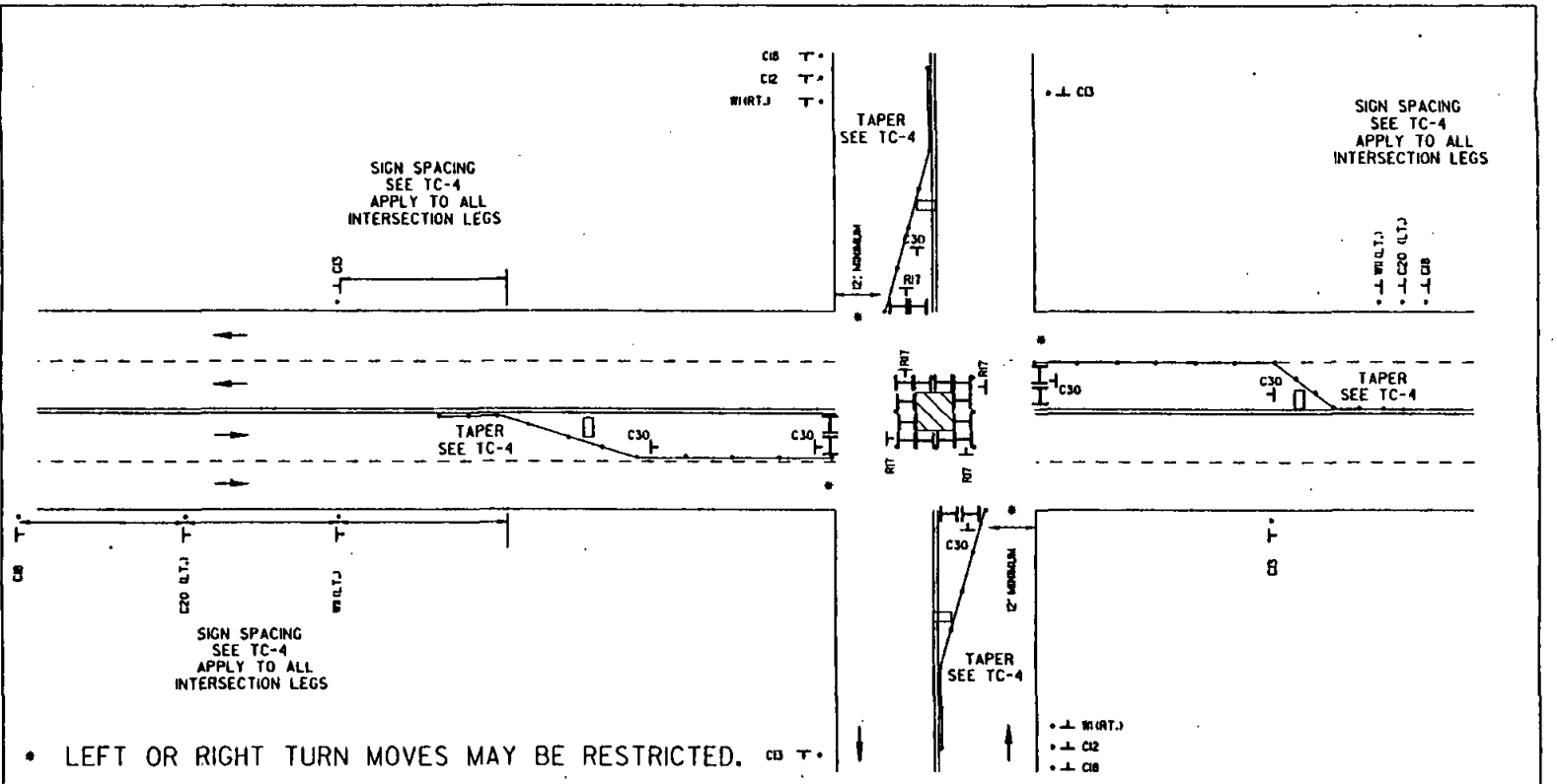

LEGEND

CONE | BARRICADE | FLAGGER | SIGN | FLASHING ARROW SIGN | WORK AREA | TRAFFIC DIRECTION

TRAFFIC ENGINEERS COMMENTS

SUBMITTED BY:
NAME
AGENCY
ADDRESS
PHONE

POSTED SPEED LIMIT	APPROACH SPEED	TAPER LENGTH	SPACING OF CONES	SIGN SPACING

SEE TC-4 FOR SIGN AND CONE SPACING AND TAPER LENGTH

GENERAL NOTES

For hours of darkness, change cones to vertical barricades with steady burn lights.

This plan DOES NOT apply at signalized or multi-way stop intersections. Consult the local jurisdiction when preparing Traffic Control Plans near these intersections.

This plan MAY NOT apply when the work areas affect bike lanes, sidewalks, pedestrian access, and curved or narrow roadways. Consult the approving agency when preparing the Traffic Control Plan for these areas.

Nothing contained on this drawing shall prevent local jurisdictions from modifying changing, or adopting new specifications deemed necessary. Criteria for position, location, and use of Traffic Control Devices is solely for the purpose of guidance to assist in the set up of the Traffic Control Plans.

TC-5 is required for all Traffic Control Plans.

DRAWING NUMBER TC-27

DRAWING NUMBER TC-28

SIDE OF ROAD WORK AREA

INTERSECTION TRAFFIC CONTROL

APPENDIX "A"
SAN DIEGO REGIONAL STANDARD

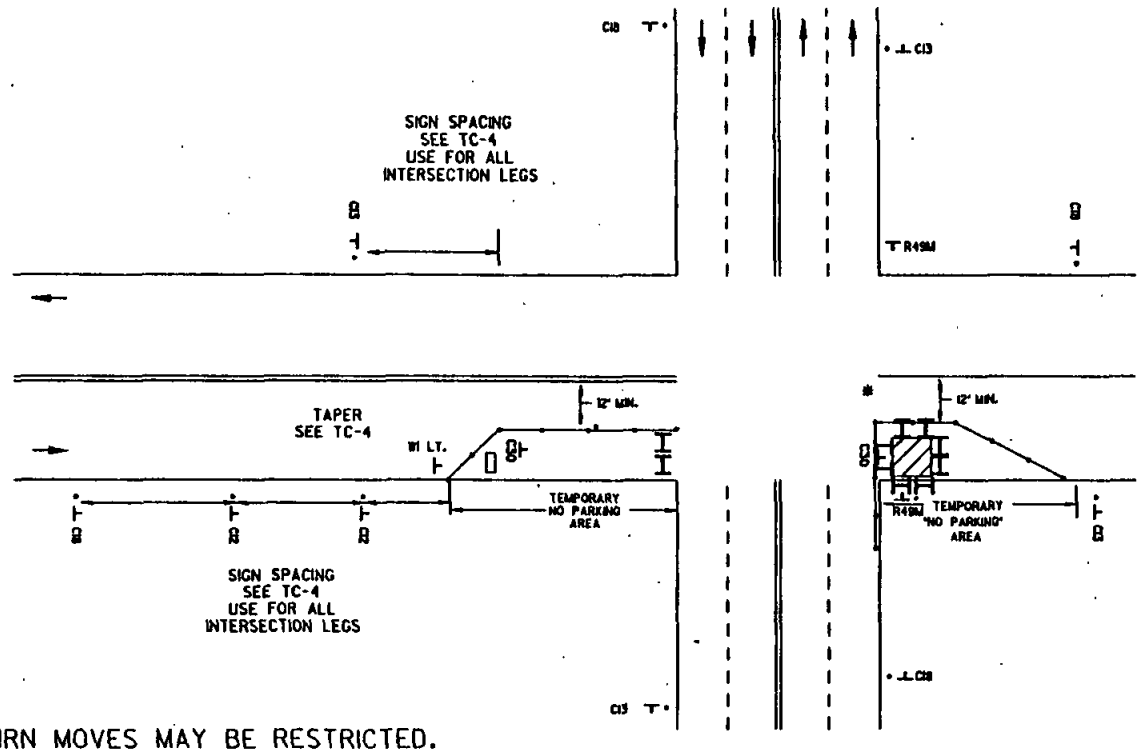

* RIGHT TURN MOVES MAY BE RESTRICTED.

LEGEND

● CONE | H BARRICADE | FLAGGER | SIGN | FLASHING ARROW SIGN | WORK AREA | TRAFFIC DIRECTION

TRAFFIC ENGINEERS COMMENTS

SUBMITTED BY:
NAME
AGENCY
ADDRESS
PHONE

POSTED SPEED LIMIT	APPROACH SPEED	TAPER LENGTH	SPACING OF CONES	SIGN SPACING

SEE TC-4 FOR SIGN AND CONE SPACING AND TAPER LENGTH

GENERAL NOTES

For hours of darkness, change cones to vertical barricades with steady burn lights.

This plan DOES NOT apply at signalized or multi-way stop intersections. Consult the local jurisdiction when preparing Traffic Control Plans near these intersections.

This plan MAY NOT apply when the work areas affect bike lanes, sidewalks, pedestrian access, and curved or narrow roadways. Consult the approving agency when preparing the Traffic Control Plan for these areas.

Nothing contained on this drawing shall prevent local jurisdictions from modifying changing, or adopting new specifications deemed necessary. Criteria for position, location, and use of Traffic Control Devices is solely for the purpose of guidance to assist in the set up of the Traffic Control Plans.

TC-5 is required for all Traffic Control Plans.

Revision	By	Approved	Date
DRAWING	DMV		4-91
DRAWING	FWM		8-91
ORIG.			10-8-91

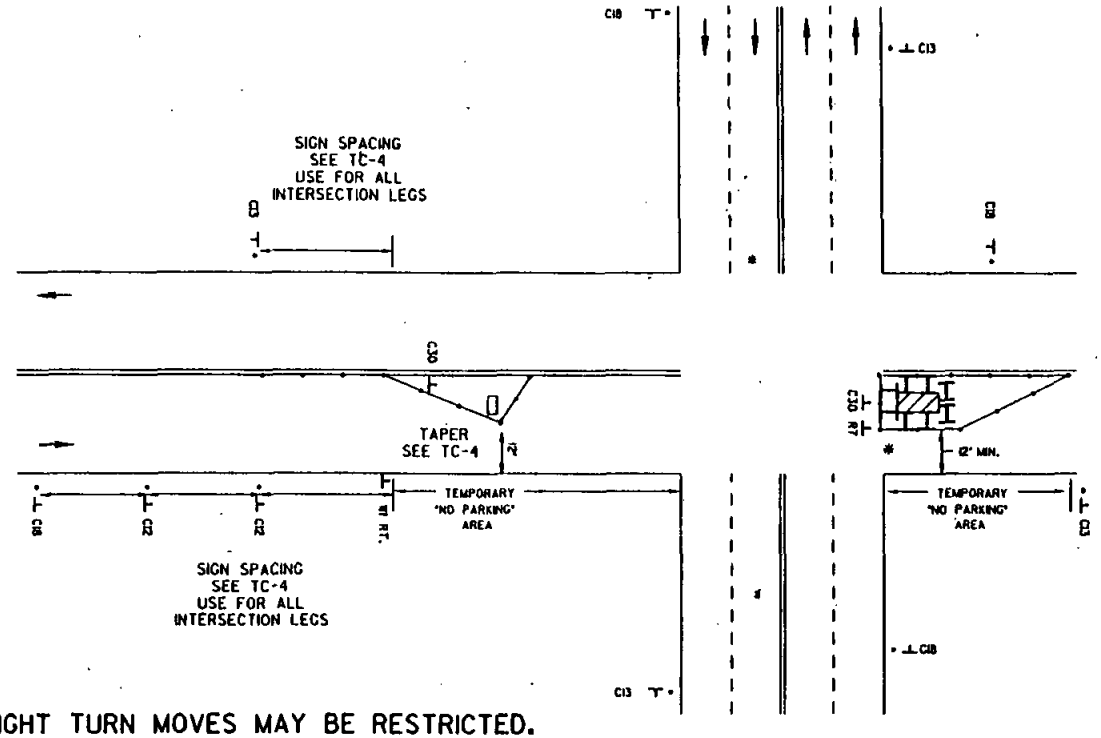

• LEFT OR RIGHT TURN MOVES MAY BE RESTRICTED.

LEGEND

● CONE H BARRICADE FLAGGER SIGN FLASHING ARROW SIGN WORK AREA TRAFFIC DIRECTION

TRAFFIC ENGINEERS COMMENTS

SUBMITTED BY:
NAME
AGENCY
ADDRESS
PHONE

POSTED SPEED LIMIT	APPROACH SPEED	TAPER LENGTH	SPACING OF CONES	SIGN SPACING

SEE TC-4 FOR SIGN AND CONE SPACING AND TAPER LENGTH

GENERAL NOTES

For hours of darkness, change cones to vertical barricades with steady burn lights.

This plan DOES NOT apply at signalized or multi-way stop intersections. Consult the local jurisdiction when preparing Traffic Control Plans near these intersections.

This plan MAY NOT apply when the work areas affect bike lanes, sidewalks, pedestrian access, and curved or narrow roadways. Consult the approving agency when preparing the Traffic Control Plan for these areas.

Nothing contained on this drawing shall prevent local jurisdictions from modifying changing, or adopting new specifications deemed necessary. Criteria for position, location, and use of Traffic Control Devices is solely for the purpose of guidance to assist in the set up of the Traffic Control Plans.

TC-5 is required for all Traffic Control Plans.

Revision	By	Approved	Date
DRAWING	DRW		4-91
DRAWING	FMM		8-91
ORIG.			10-8-91

CENTER OF ROAD WORK AREA

INTERSECTION TRAFFIC CONTROL

APPENDIX "A"
SAN DIEGO REGIONAL STANDARD

DRAWING NUMBER TC-29

DRAWING NUMBER TC-30

SIDE OF ROAD WORK AREA

INTERSECTION TRAFFIC CONTROL

APPENDIX "A"
SAN DIEGO REGIONAL STANDARD

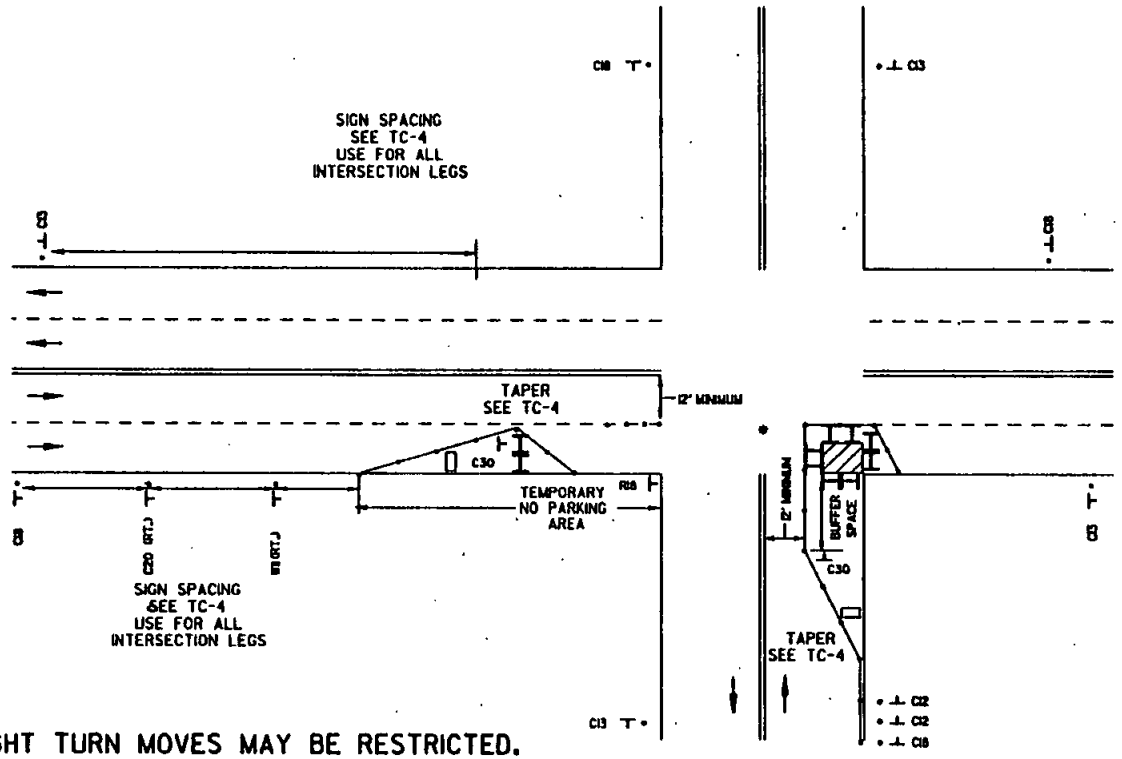

• LEFT OR RIGHT TURN MOVES MAY BE RESTRICTED.

LEGEND

● CONE | BARRICADE | FLAGGER | SIGN | FLASHING ARROW SIGN | WORK AREA | TRAFFIC DIRECTION

TRAFFIC ENGINEERS COMMENTS

SUBMITTED BY:
NAME
AGENCY
ADDRESS
PHONE

POSTED SPEED LIMIT	APPROACH SPEED	TAPER LENGTH	SPACING OF CONES	SIGN SPACING

SEE TC-4 FOR SIGN AND CONE SPACING AND TAPER LENGTH

GENERAL NOTES

For hours of darkness, change cones to vertical barricades with steady burn lights.

This plan DOES NOT apply at signalized or multi-way stop intersections. Consult the local jurisdiction when preparing Traffic Control Plans near these intersections.

This plan MAY NOT apply when the work areas affect bike lanes, sidewalks, pedestrian access, and curved or narrow roadways. Consult the approving agency when preparing the Traffic Control Plan for these areas.

Nothing contained on this drawing shall prevent local jurisdictions from modifying changing, or adopting new specifications deemed necessary. Criteria for position, location, and use of Traffic Control Devices is solely for the purpose of guidance to assist in the set up of the Traffic Control Plans.

TC-5 is required for all Traffic Control Plans.

Revision	By	Approved	Date
DRAWING ORIG.	DMV		4-91
			10-8-91

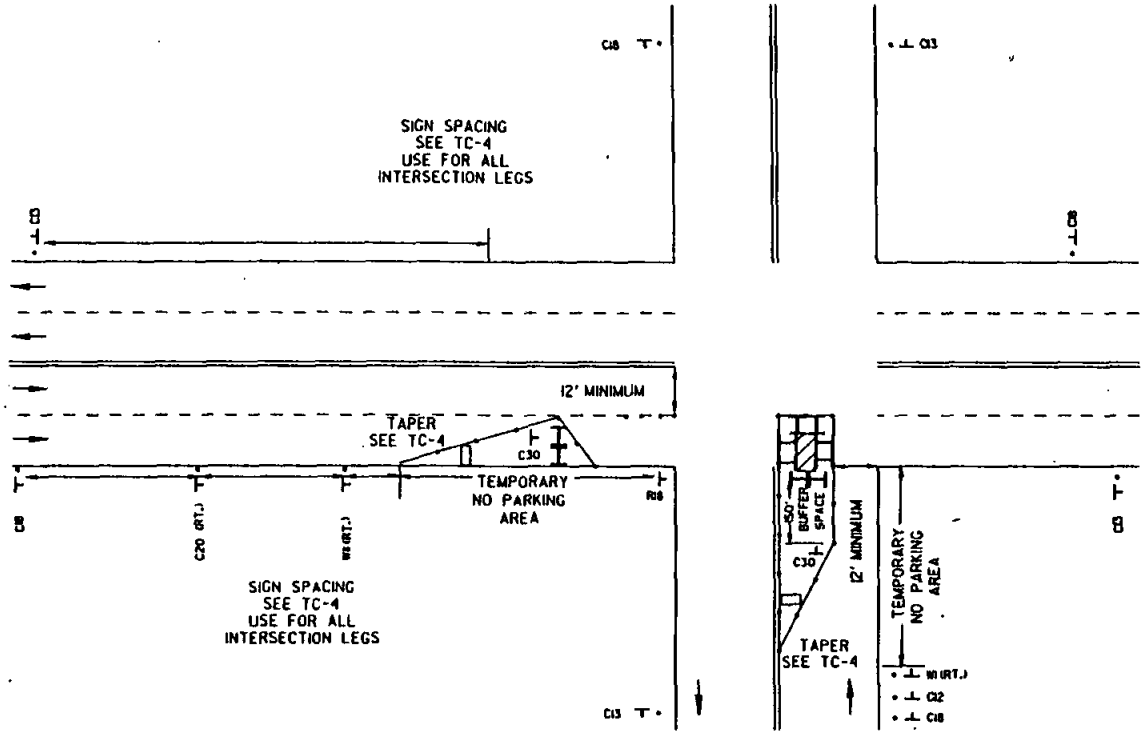

LEGEND

CONE | BARRICADE | FLAGGER | SIGN | FLASHING ARROW SIGN | WORK AREA | TRAFFIC DIRECTION

TRAFFIC ENGINEERS COMMENTS

SUBMITTED BY:
NAME
AGENCY
ADDRESS
PHONE

POSTED SPEED LIMIT	APPROACH SPEED	TAPER LENGTH	SPACING OF CONES	SIGN SPACING

SEE TC-4 FOR SIGN AND CONE SPACING AND TAPER LENGTH

GENERAL NOTES

For hours of darkness, change cones to vertical barricades with steady burn lights.

This plan DOES NOT apply at signalized or multi-way stop intersections. Consult the local jurisdiction when preparing Traffic Control Plans near these intersections.

This plan MAY NOT apply when the work areas affect bike lanes, sidewalks, pedestrian access, and curved or narrow roadways. Consult the approving agency when preparing the Traffic Control Plan for these areas.

Nothing contained on this drawing shall prevent local jurisdictions from modifying changing, or adopting new specifications deemed necessary. Criteria for position, location, and use of Traffic Control Devices is solely for the purpose of guidance to assist in the set up of the Traffic Control Plans.

TC-5 is required for all Traffic Control Plans.

Revision	By	Approved	Date
DRAWING	DWV		4-91
DRAWING	FMM		8-91
ORIG.			10-8-91

CENTER OF ROAD WORK AREA

INTERSECTION TRAFFIC CONTROL

APPENDIX "A"
SAN DIEGO REGIONAL STANDARD

DRAWING NUMBER TC-31

Revision	By	Approved	Date
DRAWING ORIG.	DRW		4-91
			10-8-91

APPENDIX "A"
SAN DIEGO REGIONAL STANDARD

SPECIAL CONDITIONS WORK AREA

TWO LANE ROADWAY
WITHOUT CENTERLINE

DRAWING NUMBER TC-90

LEGEND

CONE | BARRICADE | FLAGGER | SIGN | FLASHING ARROW SIGN | WORK AREA | TRAFFIC DIRECTION

TRAFFIC ENGINEERS COMMENTS

SUBMITTED BY:
NAME
AGENCY
ADDRESS
PHONE

POSTED SPEED LIMIT	APPROACH SPEED	TAPER LENGTH	SPACING OF CONES	SIGN SPACING

SEE TC-4 FOR SIGN AND CONE SPACING AND TAPER LENGTH

GENERAL NOTES

For hours of darkness, change cones to vertical barricades with steady burn lights.

This plan DOES NOT apply at signalized or multi-way stop intersections. Consult the local jurisdiction when preparing Traffic Control Plans near these intersections.

This plan MAY NOT apply when the work areas affect bike lanes, sidewalks, pedestrian access, and curved or narrow roadways. Consult the approving agency when preparing the Traffic Control Plan for these areas.

Nothing contained on this drawing shall prevent local jurisdictions from modifying changing, or adopting new specifications deemed necessary. Criteria for position, location, and use of Traffic Control Devices is solely for the purpose of guidance to assist in the set up of the Traffic Control Plans.

TC-5 is required for all Traffic Control Plans.

Revision	By	Approved	Date
DRAWING	DWV		4-91
ORIG.			10-8-91

APPENDIX "A"
SAN DIEGO REGIONAL STANDARD

SPECIAL CONDITIONS WORK AREA

TWO LANE ROADWAY
WITH CENTERLINE

DRAWING NUMBER TC-91

LEGEND

CONE | BARRICADE | FLAGGER | SIGN | FLASHING ARROW SIGN | WORK AREA | TRAFFIC DIRECTION

TRAFFIC ENGINEERS COMMENTS

SUBMITTED BY:
NAME
AGENCY
ADDRESS
PHONE

POSTED SPEED LIMIT	APPROACH SPEED	TAPER LENGTH	SPACING OF CONES	SIGN SPACING

SEE TC-4 FOR SIGN AND CONE SPACING AND TAPER LENGTH

GENERAL NOTES

For hours of darkness, change cones to vertical barricades with steady burn lights.

This plan DOES NOT apply at signalized or multi-way stop intersections. Consult the local jurisdiction when preparing Traffic Control Plans near these intersections.

This plan MAY NOT apply when the work areas affect bike lanes, sidewalks, pedestrian access, and curved or narrow roadways. Consult the approving agency when preparing the Traffic Control Plan for these areas.

Nothing contained on this drawing shall prevent local jurisdictions from modifying changing, or adopting new specifications deemed necessary. Criteria for position, location, and use of Traffic Control Devices is solely for the purpose of guidance to assist in the set up of the Traffic Control Plans.

TC-5 is required for all Traffic Control Plans.

Revision	By	Approved	Date
DRAWING	DRV		4-91
ORIG.			10-8-91

APPENDIX "A"
SAN DIEGO REGIONAL STANDARD

SPECIAL CONDITIONS WORK AREA

MULTILANE ROADWAY
WITH CENTERLINE

DRAWING NUMBER TC-92

LEGEND

CONE | BARRICADE | FLAGGER | SIGN | FLASHING ARROW SIGN | WORK AREA | TRAFFIC DIRECTION

TRAFFIC ENGINEERS COMMENTS

SUBMITTED BY:
NAME
AGENCY
ADDRESS
PHONE

POSTED SPEED LIMIT	APPROACH SPEED	TAPER LENGTH	SPACING OF CONES	SIGN SPACING

SEE TC-4 FOR SIGN AND CONE SPACING AND TAPER LENGTH

GENERAL NOTES

For hours of darkness, change cones to vertical barricades with steady burn lights.

This plan DOES NOT apply at signalized or multi-way stop intersections. Consult the local jurisdiction when preparing Traffic Control Plans near these intersections.

This plan MAY NOT apply when the work areas affect bike lanes, sidewalks, pedestrian access, and curved or narrow roadways. Consult the approving agency when preparing the Traffic Control Plan for these areas.

Nothing contained on this drawing shall prevent local jurisdictions from modifying changing, or adopting new specifications deemed necessary. Criteria for position, location, and use of Traffic Control Devices is solely for the purpose of guidance to assist in the set up of the Traffic Control Plans.

TC-5 is required for all Traffic Control Plans.

Revision	By	Approved	Date
DRAWING	Dwv		4-91
ORIG.			10-8-91

SPECIAL CONDITIONS WORK AREA

TWO LANE ROADWAY
WITH TWO WAY LEFT TURN LANE

APPENDIX "A"
SAN DIEGO REGIONAL STANDARD

DRAWING NUMBER TC-93

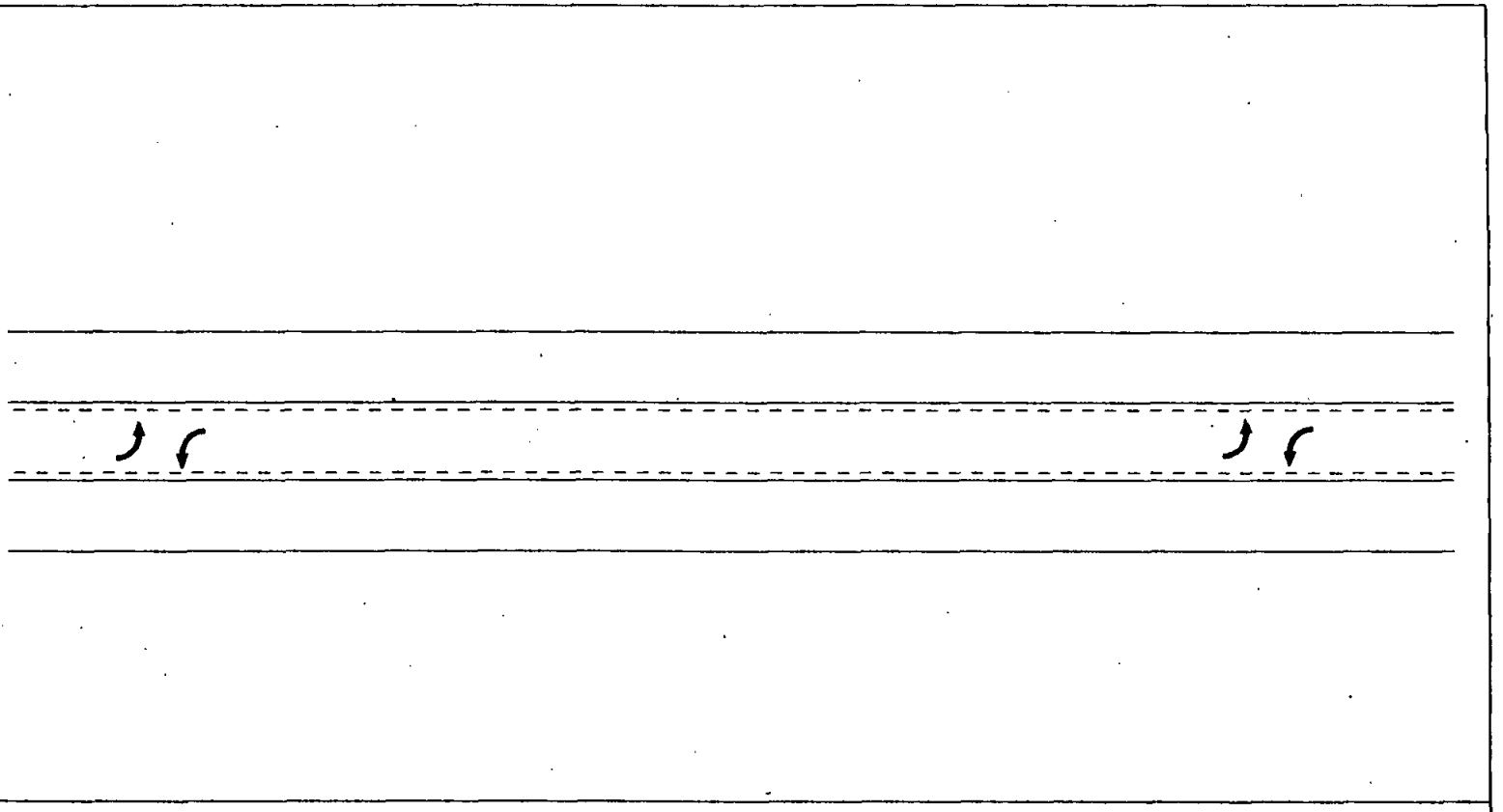

LEGEND

CONE | BARRICADE | FLAGGER | SIGN | FLASHING ARROW SIGN | WORK AREA | TRAFFIC DIRECTION

TRAFFIC ENGINEERS COMMENTS

SUBMITTED BY:
NAME
AGENCY
ADDRESS
PHONE

POSTED SPEED LIMIT	APPROACH SPEED	TAPER LENGTH	SPACING OF CONES	SIGN SPACING

SEE TC-4 FOR SIGN AND CONE SPACING AND TAPER LENGTH

GENERAL NOTES

For hours of darkness, change cones to vertical barricades with steady burn lights.

This plan DOES NOT apply at signalized or multi-way stop intersections. Consult the local jurisdiction when preparing Traffic Control Plans near these intersections.

This plan MAY NOT apply when the work areas affect bike lanes, sidewalks, pedestrian access, and curved or narrow roadways. Consult the approving agency when preparing the Traffic Control Plan for these areas.

Nothing contained on this drawing shall prevent local jurisdictions from modifying changing, or adopting new specifications deemed necessary. Criteria for position, location, and use of Traffic Control Devices is solely for the purpose of guidance to assist in the set up of the Traffic Control Plans.

TC-5 is required for all Traffic Control Plans.

Revision	By	Approved	Date
DRAWING	DRW		4-91
ORIG.			10-8-91

APPENDIX "A"
SAN DIEGO REGIONAL STANDARD

SPECIAL CONDITIONS WORK AREA

MULTILANE ROADWAY
WITH TWO WAY LEFT TURN LANE

DRAWING NUMBER TC-94

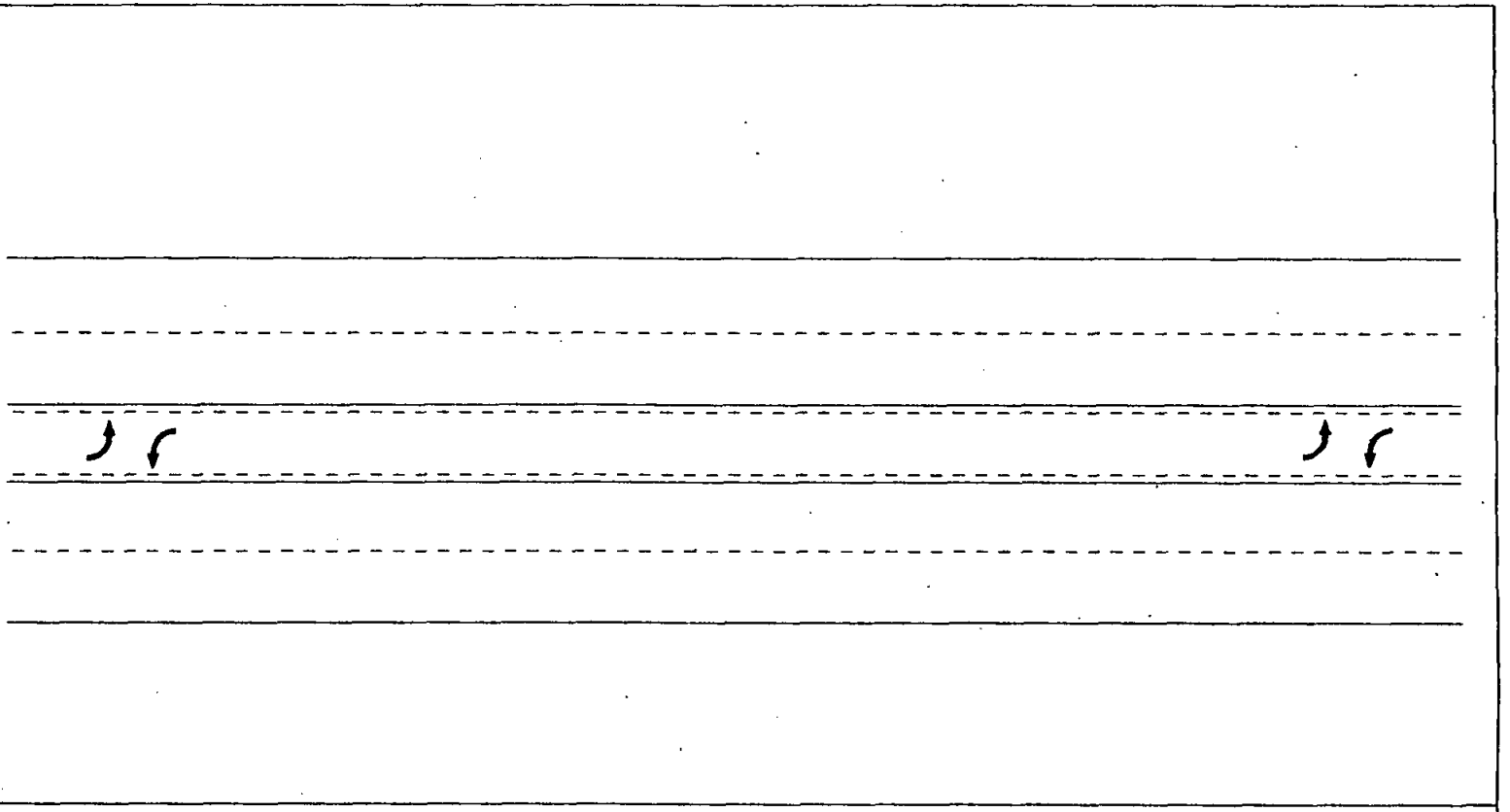

LEGEND

● CONE H BARRICADE FLAGGER SIGN FLASHING ARROW SIGN WORK AREA TRAFFIC DIRECTION

TRAFFIC ENGINEERS COMMENTS

SUBMITTED BY:
NAME
AGENCY
ADDRESS
PHONE

POSTED SPEED LIMIT	APPROACH SPEED	TAPER LENGTH	SPACING OF CONES	SIGN SPACING

SEE TC-4 FOR SIGN AND CONE SPACING AND TAPER LENGTH

GENERAL NOTES

For hours of darkness, change cones to vertical barricades with steady burn lights.

This plan DOES NOT apply at signalized or multi-way stop intersections. Consult the local jurisdiction when preparing Traffic Control Plans near these intersections.

This plan MAY NOT apply when the work areas affect bike lanes, sidewalks, pedestrian access, and curved or narrow roadways. Consult the approving agency when preparing the Traffic Control Plan for these areas.

Nothing contained on this drawing shall prevent local jurisdictions from modifying changing, or adopting new specifications deemed necessary. Criteria for position, location, and use of Traffic Control Devices is solely for the purpose of guidance to assist in the set up of the Traffic Control Plans.

TC-5 is required for all Traffic Control Plans.

Revision	By	Approved	Date
DRAWING	DWV		4-91
ORIG.			10-8-91

SPECIAL CONDITIONS WORK AREA

MULTILANE ROADWAY
WITH RAISED MEDIAN

APPENDIX "A"
SAN DIEGO REGIONAL STANDARD

DRAWING NUMBER TC-95

RAISED MEDIAN

LEGEND

● CONE H BARRICADE FLAGGER SIGN FLASHING ARROW SIGN WORK AREA TRAFFIC DIRECTION

TRAFFIC ENGINEERS COMMENTS

SUBMITTED BY:
NAME
AGENCY
ADDRESS
PHONE

POSTED SPEED LIMIT	APPROACH SPEED	TAPER LENGTH	SPACING OF CONES	SIGN SPACING

SEE TC-4 FOR SIGN AND CONE SPACING AND TAPER LENGTH

GENERAL NOTES

For hours of darkness, change cones to vertical barricades with steady burn lights.

This plan DOES NOT apply at signalized or multi-way stop intersections. Consult the local jurisdiction when preparing Traffic Control Plans near these intersections.

This plan MAY NOT apply when the work areas affect bike lanes, sidewalks, pedestrian access, and curved or narrow roadways. Consult the approving agency when preparing the Traffic Control Plan for these areas.

Nothing contained on this drawing shall prevent local jurisdictions from modifying changing, or adopting new specifications deemed necessary. Criteria for position, location, and use of Traffic Control Devices is solely for the purpose of guidance to assist in the set up of the Traffic Control Plans.

TC-5 is required for all Traffic Control Plans.

Revision	By	Approved	Date
DRAWING ORIG.	DWV		4-91
			10-8-91

SPECIAL CONDITIONS WORK AREA

INTERSECTION

APPENDIX "A"
SAN DIEGO REGIONAL STANDARD

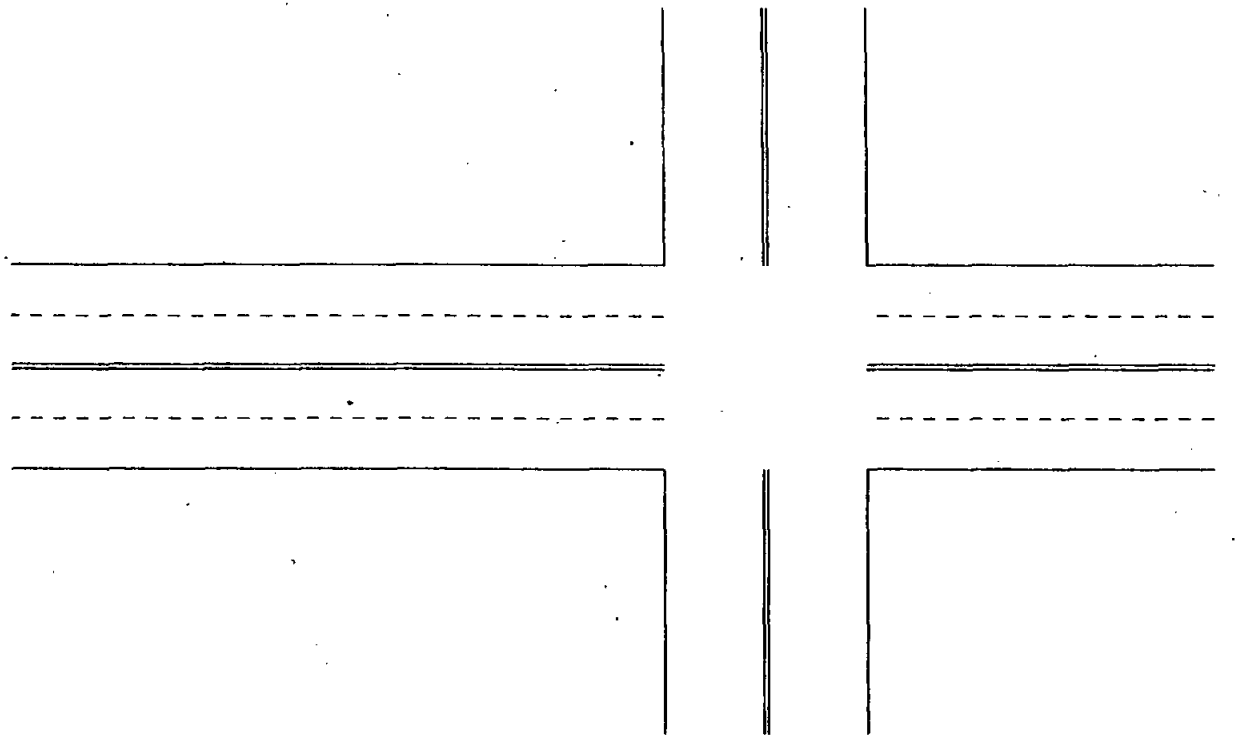

LEGEND

● CONE ⊢ BARRICADE FLAGGER SIGN FLASHING ARROW SIGN WORK AREA TRAFFIC DIRECTION

TRAFFIC ENGINEERS COMMENTS

SUBMITTED BY:
NAME
AGENCY
ADDRESS
PHONE

POSTED SPEED LIMIT	APPROACH SPEED	TAPER LENGTH	SPACING OF CONES	SIGN SPACING

SEE TC-4 FOR SIGN AND CONE SPACING AND TAPER LENGTH

GENERAL NOTES

For hours of darkness, change cones to vertical barricades with steady burn lights.

This plan DOES NOT apply at signalized or multi-way stop intersections. Consult the local jurisdiction when preparing Traffic Control Plans near these intersections.

This plan MAY NOT apply when the work areas affect bike lanes, sidewalks, pedestrian access, and curved or narrow roadways. Consult the approving agency when preparing the Traffic Control Plan for these areas.

Nothing contained on this drawing shall prevent local jurisdictions from modifying changing, or adopting new specifications deemed necessary. Criteria for position, location, and use of Traffic Control Devices is solely for the purpose of guidance to assist in the set up of the Traffic Control Plans.

TC-5 is required for all Traffic Control Plans.

DRAWING NUMBER TC-96

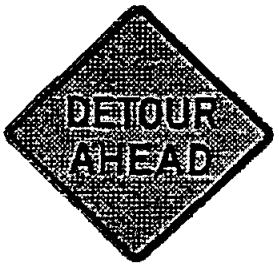

C1

C2

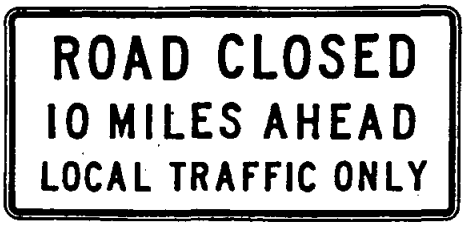

C3

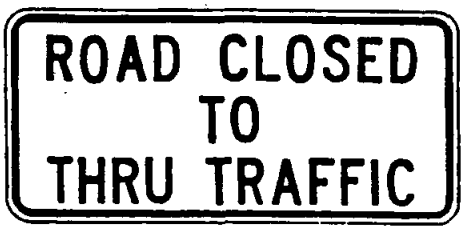

C3A

C5 (RT)

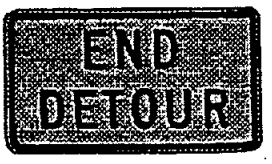

C7

C9A

C12

C13

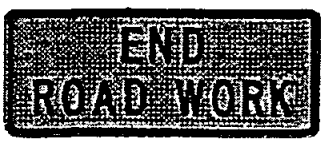

C14

C18

C19

C20 (RT)

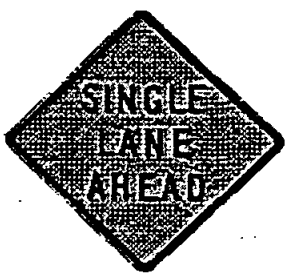

C21

C23

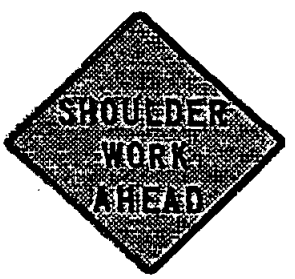

C24

Revision	By	Approved	Date
Drawing			10-99
			11-1-99

APPENDIX A
SAN DIEGO REGIONAL STANDARD DRAWING

TYPICAL CONSTRUCTION SIGNS

DRAWING NUMBER TC-97

C27

C28A
FLAGGER
PADDLE

C28B
FLAGGER
PADDLE

C30

C30A

C36

R1

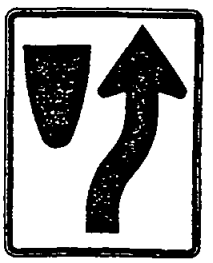

R7

R16

R17

R18

R26

R34

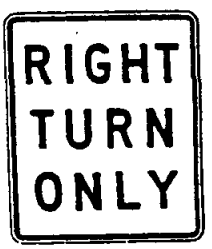

R41

R42

R49M

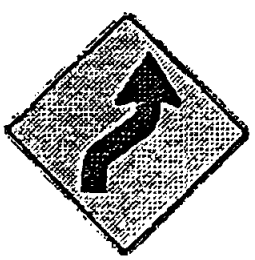

W1 (RT)

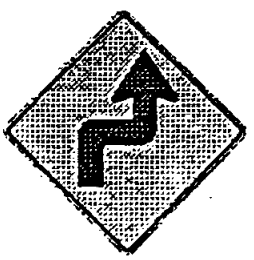

W2 (RT)

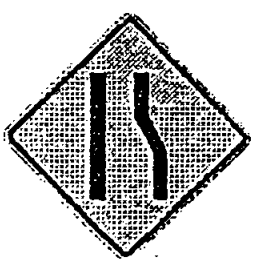

W11 (RT)

Revision	By	Approved	Date	APPENDIX A SAN DIEGO REGIONAL STANDARD DRAWING	
Drawing					
ORIG.			10-8-91	TYPICAL CONSTRUCTION SIGNS	
			12/18/91		
			4-6-92		DRAWING NUMBER TC-98

INDEX

-A-

AIR AND VACUUM VALVE
1" and 2" W-4
4" and 6" W-5
Enclosure W-14

AIR RELEASE VALVE
Manual. W-3

ALLEY
Apron, Concrete G-17
Concrete, Pavement. . . G-21

ANCHOR, PIPE
Concrete. S-9
Thrust. W-22
Valve W-19
Vertical Bend W-20

-B-

BACKFILL, PIPE TRENCH
Irrigation. I-25, I-26
Sewer S-4
Storm Drain D-60
Water Main W-21

BACKFLOW PREVENTER
Continuous Pressure . . I-8, I-9
Guard Fence I-32
Reduced Pressure. . . . I-31
Reduced Pressure. . . . W-26
Vacuum Breaker. I-7

BARRICADE, STREET. M-9

BARRIER. M-42, M-43, M-39

BENCH MARK, BRASS PLUG . . M-11

BERM, ASPHALT CONCRETE . . G-5

BLOCK, CONCRETE
Anchor. W-20, W-22
Thrust. W-17, W-22
Valve W-19

BLOW-OFF, WATER
2". W-6, W-7
4" and 6" W-8, W-9

BROW DITCH D-75

BUTT STRAP, SPLIT. W-24

-C-

CATCH BASIN
Corrugated Steel Pipe
Types A and B D-16
Grate Top, Type G, I. . D-8, D-29
Side Opening, Type F. . D-7

CHANNEL, DRAINAGE
Cutoff Wall D-72
Debris Fence. D-82
Earthen D-74
Concrete Lined. D-70, D-71
Pipe Connection D-73

CLEANOUT
Sewer, Force Main . . . S-16
Sewer, Gravity. S-3
Storm Drain, Type A, B. D-9, D-10
Storm Drain, Notes and Details. D-11

CONCRETE
Backfill, Sewer S-8
Collar, Pipe. D-62
Cradle, Sewer S-6
Encasement, Sewer . . . S-7, S-12
Protection, Sewer . . . S-11
Lug, Pipe D-63
Mowing Strip. L-3
Removal and Replacement G-11
Steps M-26

CORRUGATED STEEL PIPE
Inlets, Type A, B . . . D-16, D-17
Slotted Drain D-18, D-19

CULVERT, BOX
Double. D-77A, D-76B
Miscellaneous Details . D-81A, D-81B
Single. D-76A, D-76B
Triple. D-78A, D-78B
Wingwalls, Type A,B,C . D-79A, D-79B
Wingwalls, Warped . . . D-80A, D-80B

CURB AND GUTTER
Combined. G-2
Median. G-6
Monolithic With Sidewalk. G-3

INDEX

Removal and Replacement G-11
Rolled. G-4
Separate. G-1

CURB INLET
Apron, Concrete D-20
Grate D-15
Median, Type J. D-45
Notes and Details . . . D-11
Opening D-12
Side Opening Only . . . D-1, D-2, D-4
Side Opening w/Grate. . D-3

CURB OUTLET
Concrete, Type A. . . . D-25
Pipe. D-27

CURTAIN WALL D-38

CUTOFF WALL
Alley Pavement. G-23
Channel. D-72
Street Pavement G-22
Trench. S-10

-D-

DATUMS M-12

DEBRIS FENCE D-82

DIKE, A.C. G-5

DISSIPATOR, ENERGY
Concrete. D-41, D-42,
. . . . . D-43
Rip Rap D-40

DITCH, BROW, TERRACE. . . D-75

DOWNDRAIN
Asphalt Concrete. . . . D-22
Flume D-23
Pipe. D-24

DRINKING FOUNTAIN M-18

DRIVEWAY
Concrete. G-14, G-26
Location. G-15, G-16
Width G-16

-E-

ELECTRICAL PEDESTAL. . . E-33

ENCASEMENT
Sewer Pipe. S-7
Sewer Pipe, Undercut. . S-12

-F-

FENCE
Chain Link. M-6
Debris Fence. D-82
Details M-20
Tennis Court. M-17

FIRE HYDRANT
6" Hydrant. W-10
Locations W-11
Markers M-19

FLUME DOWN DRAIN. D-23

FRAME
Grate D-13
Manhole M-1, M-2, M-3

-G-

GRATE
Drainage D-15
Frame D-13
Tree Well L-4

GUARD RAIL, METAL BEAM
Connections M-40, M-41
Details M-36
End Anchors M-37, M-38,
M-39
Flares. M-34, M-35
Hardware. M-32
Posts and Blocks. . . . M-33
Railing M-31
Standard. M-30

GUTTER
Cross G-12
Cross, Mid-Block. . . . G-13
Separate from Curb. . . G-1

INDEX

-H-

HANDICAPPED PARKING
- Sign. M-28
- Spaces. M-27
- Legend. M-29

HEADWALL
- Gravity Type. D-32, D-33
- L Type. D-36, D-37
- Straight, Type A, B . . D-30, D-31
- Warped. D-44
- Wing and U Type D-34, D-35

HYDRANT MARKERS, FIRE . . M-19

-I-

INLET APRON D-39

INLET, DRAIN
- Corrugated Steel Pipe, Type A & B. D-16, D-17
- Slotted, Corrugated Steel Pipe. D-18, D-19

INLET, PROTECTION BAR . . D-12

-J-

JOINT TRENCH. M-15

-L-

LATERAL
- Sewer S-13
- Sewer, Deep Cut S-14
- Sewer, Repair S-15

LIGHTING
- Grounding E-2
- Light Pole Pad. L-5
- Standard. E-1

LUG, CONCRETE D-62

-M-

MANHOLE, FRAME AND COVER
- 24" Heavy Duty. M-1
- 24" Light Duty. M-2
- 36" Concentric Covers . M-3
- Locking Device. M-4

MANHOLE, SEWER
- 4′ x 3′ Diameter. . . . S-17
- 5′ x 3′ Diameter. . . . S-2

MEDIAN
- Curb Inlet. D-45
- Curbs and Gutter. . . . G-6

METER BOX LOCATION. . . . W-15

METRIC EQUIVALENTS. . . . M-14

MONUMENT
- Bench Mark. M-11
- Street Survey M-10
- Survey. M-13

MOWING STRIP, CONCRETE. . L-3

-P-

PAVEMENT, CONCRETE
- Alley Section G-21
- Joints. G-10
- Width 40′ or Less . . . G-18
- Width 40′ to 62′. . . . G-19
- Width 53′ to 69′. . . . G-20

PEDESTAL, ELECTRICAL. . . E-33

PEDESTRIAN
- Protective Railings . . M-24, M-25
- Ramp. . . . . G-27, G-28, ... G-29, G-30, ... G-31
- Ramp General Notes. . . G-32

PIPE
- Collar. D-62
- Lug D-63
- Rounded Ends. D-61
- Slotted D-18, D-19

PLANTING, TREE AND SHRUB. L-1, L-2

INDEX

POST
- Demountable M-16
- Guard M-9
- Protection. W-16

PULL BOX. I-15

-R-

RAILING
- Pedestriam. M-24, M-25
- Temporary M-44

RAMP, PEDESTRIAN. G-27, G-28,
. . . . . G-29, G-30,
. . . . . G-31
- General Notes G-32

RETAINING WALL
- Concrete. C-11, C-12
- Details, Concrete . . . C-13, C-14
- Details, Gravity. . . . C-10
- Details, Masonry. . . . C-7, C-8
- Gravity C-9
- Masonry C-1, C-2, C-3,
. . . . . C-4, C-5, C-6

-S-

SERVICE, WATER. W-1, W-2, W-21

SEWER LATERAL S-13, S-14

SIDEWALK
- Drain Outlet. D-25
- Joint Details G-10
- Joint Locations G-9
- Monolithic Curb G-3
- Pipe Underdrain D-27
- Removal and Replacement G-11
- Typical Section G-3, G-7

SPRINKLER
- Above Ground
- Installation. I-21, I-22,
. . . . . I-23
- Controller Mounting . . I-17, I-18
- Connection, Main. . . . I-28, I-29
- Head, Fixed Spray . . . I-1
- Head, Pop Up Rotary . . I-3
- Head, Pop Up Spray. . . I-2
- Head, Impact. I-19, I-30
- Head, Shrub Rotor . . . I-34
- Pull Box, Electrical. . I-15
- Trench Detail I-25, I-26

STAKING, TREE L-2

STEPS CONCRETE. M-26

STREET LIGHT
- Foundation. E-2
- Grounding E-2
- Standard. E-1

-T-

TAPE LOCATOR, METALLIC
- Sewer Pipe. S-19
- Water Pipe. W-25

TENNIS COURT FENCE. . . . M-17

TERRACE DITCH D-75

THRUST ANCHORS
- Bearing Area. W-18
- Concrete. W-17, W-19,
. . . . . W-20, W-22

TRAFFIC
- Control Plans . . . . . APPENDIX A

TRENCH DETAILS
- Irrigation. I-25, I-26
- Joint Utilities M-15
- Narrow. G-33, G-34,
. . . . . G-35
- Resurfacing G-24, G-25
- Sewer S-4
- Slurry Backfill G-36
- Storm Drain D-60
- Water Main. W-21

-U-

UNDERDRAIN, SIDEWALK
- Pipe. D-27
- Concrete, Reinforced. . D-25

INDEX

UNDERGROUND TYPICAL LOCATION
Conversion. M-21
Replacement M-21
Upgrade M-21
UTILITY LOCATIONS
Collector Streets . . . M-22
Expressways M-23
Joint Trench. M-15
Local Streets M-22
Major Streets M-23
Prime Arterials M-23

-V-

VALVE, SPRINKLER
Gate. I-12
Hose Bib. I-6
Manifold Assembly . . . I-33
Manual. I-13, I-21
Remote Control. I-14
Quick Coupling. I-5, I-22
Well. I-27

VALVE, WATER
Air and Vacuum. W-4, W-5
Blocking, Concrete. . . W-19
Enclosure,
Air and Vacuum. W-14
Stem Extension. W-13
Well Installation . . . W-12

-W-

WATER SERVICE
1". W-1
1-1/2" and 2" W-2
Multiple. W-23