SAN DIEGO AREA

REGIONAL STANDARD DRAWINGS

STANDARD DRAWINGS FOR AGENCIES IN THE SAN DIEGO REGION

Recommended by the Regional Standards Committee
Maintained and Published by the County of San Diego
Department of Public Works
April 2003

Regional Standards Committee

These 2003 San Diego Area Regional Standard Drawings have been prepared and adopted by the San Diego Regional Standards Committee (RSC) for use in San Diego County with the Public Works Standards, Inc "Greenbook" Standard Specifications for Public Works Construction, 2003 Edition and the "2003 Regional Supplements to the Greenbook 2003".

The Greenbook was first published in 1967 and the Regional Standards Committee was established under San Diego County Board of Supervisors Policy I-50 in 1973. The Regional Standards Committee membership is open to the City Engineers, Directors of Public Works, District Engineers and Heads of Engineering from the County of San Diego, cities within the County of San Diego, all water and sewer districts, utility companies, construction associations, consultant associations, and various private industry organizations. The County Department of Public Works provides coordination and staff support for the Regional Standards Committee. The RSC Chair is selected by the committee members and serves a three-year term.

A major change this year is the addition of metric units to the drawings. The RSC has selected "hard conversion" from English imperial units to metric units in the supplements and standard drawings. Hard conversion is defined as calculating the actual value in metric units from English imperial units and then rounding up for 5 and above. The Greenbook uses soft and hard conversions.

Anyone may submit proposed changes to the San Diego Area Regional Standard Drawings. Proposed changes shall be submitted to the Regional Standards staff at the:

County of San Diego
Department of Public Works
Attention: Regional Standards Committee Coordinator
5555 Overland Avenue, MS 0340
San Diego, CA 92123.

Information about the RSC, committee membership, operating procedures, meeting schedule, agenda and minutes, standard drawings and specifications along with a revision form are available at the Regional Standards Committee website: http://www.regional-stds.com. The process for submitting changes is detailed in the operating procedures. As part of the process all approved drawing revisions will be posted on the website as "pending issuance".

04/01/2003

Timothy N. Stanton
Chairman, Regional Standards Committee

TABLE OF CONTENTS

SECTION C - CONCRETE STRUCTURES

C-1 Masonry Retaining Wall Type 1 (Level Backfill)

C-2 Masonry Retaining Wall Type 2 (Live Load Surcharge or Sloping Backfill)

C-3 Masonry Retaining Wall Type 3 Level Backfill)

C-4 Masonry Retaining Wall Type 4 (Live Load Surcharge or Sloping Backfill)

C-5 Masonry Retaining Wall Type 5 (Level Backfill)

C-6 Masonry Retaining Wall Type 6 (Live Load Surcharge or Sloping Backfill)

C-7 General Notes for Masonry Retaining Wall

C-8 Details for Masonry Retaining Wall

C-9 Gravity Retaining Walls

C-10 General Notes and Details for Gravity Retaining Walls

C-11A Reinforced Concrete Retaining Wall Type 1

C-11B Reinforced Concrete Retaining Wall Type 1

C-11C Reinforced Concrete Retaining Wall Type 1

C-11D Reinforced Concrete Retaining Wall Type 1

C-12A Reinforced Concrete Retaining Wall Type 1A

C-12B Reinforced Concrete Retaining Wall Type 1A

C-13A Reinforced Concrete Retaining Wall Details No. 1

C-13B Reinforced Concrete Retaining Wall Details No. 1

C-13C Reinforced Concrete Retaining Wall Details No. 1

C-13D Reinforced Concrete Retaining Wall Details No. 1

C-14 Reinforced Concrete Retaining Wall Details No. 2

C-15 Reinforced Concrete Retaining Wall Details No. 3

DRAINAGE SYSTEMS

D-1 Curb Inlet - Type B

D-2 Curb Inlet - Type B

D-3 Curb Inlet - Type C

D-4 Curb Inlet - Type D

D-5A Curb Inlet - Type D (Details)

D-5B Curb Inlet - Type D (Details)

D-7 Catch Basin Type F

D-8 Catch Basin Type G

D-9 Storm Drain Cleanout - Type A

D-10 Storm Drain Cleanout - Type B

D-11A Inlets and Cleanouts - Notes and Details

D-11B Inlets and Cleanouts - Notes and Details

D-12 Curb Inlet Opening

D-13 Welded Steel Grate Frame

D-15 Drainage Structure Grate

D-16 Corrugated Steel Pipe Inlets Types A & B

D-17A Corrugated Steel Pipe Inlets, Details

D-17B Corrugated Steel Pipe Inlets, Details

TABLE OF CONTENTS

D-18 Slotted Corrugated Steel Pipe Drains 12" through 24"

D-19 Slotted Drain Connections to Standard Inlets

D-20 Concrete Apron for Curb Inlet

D-22 Asphalt Concrete Spillway

D-23 Tapered Inlet and Downdrain Flume

D-24A Entrance Taper and Downdrain Pipe

D-24B Entrance Taper and Downdrain Pipe

D-25 Curb Outlet - Type A

D-27 Sidewalk Underdrain Pipe

D-29 Catch Basin - Type 1

D-30 Straight Headwall - Type A (Circular Pipe)

D-31 Straight Headwall - Type A (CSP - Arch)

D-32 Straight Headwall - Type B (Circular Pipe)

D-33 Straight Headwall - Type B (CSP - Arch)

D-34 Wing and U Type Headwalls for 12" to 36" Pipe

D-35A Wing and U Type Headwalls for 42" to 84" Pipe

D-35B Wing and U Type Headwalls for 42" to 84" Pipe

D-36 Type L Headwalls - Circular Pipe

D-37 L Type Headwalls - CSP Arch

D-38 Curtain Wall

D-39 Inlet Apron for Culverts Up to 42" Diameter

D-40 Rip Rap Energy Dissipator

D-41A Concrete Energy Dissipator

D-41B Concrete Energy Dissipator

D-42 Concrete Energy Dissipator (Reinforcement) 18" to 30" Diameter Pipe

D-43A Concrete Energy Dissipator (Reinforcement) 36" to 72" Diameter Pipe

D-43B Concrete Energy Dissipator (Reinforcement) 36" to 72" Diameter Pipe

D-43C Concrete Energy Dissipator (Reinforcement) 36" to 72" Diameter Pipe

D-44A Pipe Culvert Headwalls, Endwalls and Warped Wingwalls

D-44B Pipe Culvert Headwalls, Endwalls and Warped Wingwalls

D-44C Pipe Culvert Headwalls, Endwalls and Warped Wingwalls

D-44D Pipe Culvert Headwalls, Endwalls and Warped Wingwalls

D-45 Curb Inlet - Type J Median

D-60 Pipe Bedding and Trench Backfill for Storm Drains

D-61 Rounded Pipe Ends in Drainage Structures

D-62 Pipe Collar

D-63 Concrete Lug

D-70 Minor Drainage Channel

D-71 Major Drainage Channel

D-72 Cutoff Wall for Drainage Channel

D-73 Pipe to Channel Connection

D-74 Graded Earth Channel

TABLE OF CONTENTS

D-75 Drainage Ditches

D-76A Single Box Culvert, Details No. 1

D-76B Single Box Culvert, Details No. 1

D-76C Single Box Culvert, Details No. 1

D-76D Single Box Culvert, Details No. 1

D-76E Single Box Culvert, Details No. 1

D-76F Single Box Culvert, Details No. 1

D-76G Single Box Culvert, Details No. 1

D-76H Single Box Culvert, Details No. 1

D-76I Single Box Culvert, Details No. 1

D-76J Single Box Culvert, Details No. 1

D-76K Single Box Culvert, Details No. 1

D-77A Double Box Culvert, Details No. 1

D-77B Double Box Culvert, Details No. 1

D-77C Double Box Culvert, Details No. 1

D-77D Double Box Culvert, Details No. 1

D-77E Double Box Culvert, Details No. 1

D-77F Double Box Culvert, Details No. 1

D-77G Double Box Culvert, Details No. 1

D-77H Double Box Culvert, Details No. 1

D-77I Double Box Culvert, Details No. 1

D-77J Double Box Culvert, Details No. 1

D-77K Double Box Culvert, Details No. 1

D-77L Double Box Culvert, Details No. 1

D-77M Double Box Culvert, Details No. 2

D-78A Triple Box Culvert, Details No. 1

D-78B Triple Box Culvert, Details No. 1

D-78C Triple Box Culvert, Details No. 1

D-78D Triple Box Culvert, Details No. 1

D-78E Triple Box Culvert, Details No. 1

D-78F Triple Box Culvert, Details No. 1

D-78G Triple Box Culvert, Details No. 1

D-78H Triple Box Culvert, Details No. 1

D-78I Triple Box Culvert, Details No. 1

D-78J Triple Box Culvert, Details No. 1

D-78K Triple Box Culvert, Details No. 1

D-78L Triple Box Culvert, Details No. 1

D-78M Triple Box Culvert, Details No. 2

D-79A Box Culvert Wingwall Types A, B and C, Details No. 1

D-79B Box Culvert Wingwall Types A, B and C, Details No. 1

D-79C Box Culvert Wingwall Types A, B and C, Details No. 1

D-79D Box Culvert Wingwall Types A, B and C, Details No. 1

D-79E Box Culvert Wingwall Types A, B and C, Details No. 1

D-79F Box Culvert Wingwall Types A, B and C, Details No. 1

D-80A Box Culvert Warped Wingwalls, Details No. 1

D-80B Box Culvert Warped Wingwalls, Details No. 2

D-80C Box Culvert Warped Wingwalls, Details

TABLE OF CONTENTS

No. 2

D-81A Box Culvert, Miscellaneous Details No. 1

D-81B Box Culvert, Miscellaneous Details No. 2

D-82 Debris Fence

ELECTRICAL SYSTEMS

E-I Street Lighting Standard

E-2 Grounding of Concrete Lighting Standards

E-33 Pedestal for Electrical Equipment

GENERAL SURFACE IMPROVEMENTS

G-1 Curbs and Gutter-Separate

G-2 Curbs and Gutters - Combined

G-3 Monolithic Curb, Gutter and Sidewalk

G-4 Curb and Gutter - Rolled

G-5 Dikes - Asphalt Concrete

G-6 Curbs and Gutter - Median

G-7 Sidewalk - Typical Sections

G-9 Sidewalk Joint Locations

G-10 Concrete Joint Details

G-11 Portland Cement Concrete Curb, Gutter, Sidewalk & Pavement Removal and Replacement

G-12 Cross Gutter

G-13 Mid-Block Cross Gutter

G-14A Concrete Driveways (Contiguous Sidewalk)

G-14B Concrete Driveways (Non-contiguous Sidewalk)

G-14C Residential Concrete Driveway

G-14D Concrete Driveway (for Confined Right-of-Way)

G-15 Driveway Location and Width Requirements

G-16 Driveway Location and Width Requirements

G-17 Alley Apron

G-18 Concrete Pavement, Width 40' or Less

G-19 Concrete Pavement, Width 40' to 62'

G-20 Concrete Pavement, Alley Section, Width 53' to 69'

G-21 Concrete Pavement, Alley Section, Width 40' or Less

G-22 Cutoff Wall at End of Pavement

G-23 Cutoff Wall at End of Alley Pavement

G-24 Trench Resurfacing Types A & B

G-24 Trench Resurfacing Types C & D

G-26 Concrete Driveway Commercial Alternate

G-27 Curb Ramp - Types A and B (New Construction)

G-28 Curb Ramp - Types A-1 and B-1 (For Existing Sidewalk)

G-29 Curb Ramp - Type C (For Existing Sidewalk)

G-30 Curb Ramp - Type C-1

G-31 Curb Ramp - Type D

G-32 General Notes for Curb Ramps

G-33 Narrow Trenches Trenching & Backfilling

G-36 Slurry Backfill

TABLE OF CONTENTS

SECTION I - SPRINKLER IRRIGATION SYSTEMS

I-1 Shrubbery Sprinkler Head, Fixed Spray Type

I-2 Sprinkler Head, Pop Up Spray Type

I-3 Lawn Sprinkler Head, Pop Up Rotary (With Swing Joint)

I-5 Quick Coupling Valve

I-6 Hose Bibb (Garden Valve)

I-7 Backflow Preventer Atmospheric Vacuum Breaker (2" and Smaller)

I-8 Backflow Preventer Continuous Pressure Vacuum Breaker (2" and Smaller)

I-16 Direct Burial Control Wire

I-17 Irrigation System Electric Controller Clock Pedestal Mounting

I-18 Irrigation System Electric Controller Clock Wall Mounting

I-19 Impact Head - Above Ground Pipe Installation

I-20 Pinning of Pipe - Above Ground Pipe Installations

I-21 Manual Control Valve and Gate Valve Installation for Above Ground Pipe Installations

I-22 Quick Coupler Assembly- Above Ground Pipe Installations

I-23 Swing Joint and Pipe Installation on Slopes Above Ground Pipe Installations

I-24 Double Swing Joint- Above Ground Pipe Installations

I-25 Trench Detail PVC and/or Copper Pipe Installations

I-26 Trench Detail- Asbestos Cement Pipe and 4" and Larger PVC

I-27 Valve Well and Cover

I-28 Connection Detail for New Asbestos Cement Supply Mains

I-29 Connection Detail for Existing Asbestos Cement Supply Mains

I-30 Impact Head (With Swing Joint)

I-33 Manifold Assembly, Remote Control Valve

I-34 Shrub Sprinkler Head, Rotor Type

SECTION L - LANDSCAPING

L-1 Tree Planting & Staking

L-2 Shrub Plating

L-3 Concrete Mowing Strip

L-4 Steel Grate Tree Well Cover

L-5 Light Pole Pad in Turf Areas

SECTION M - MISCELLANEOUS

M-1 24" Manhole Frame and Cover, Heavy Duty

M-2 24" Manhole Frame and Cover, Light Duty

M-3 36" Manhole Frame and Two Concentric Covers, Heavy Duty

M-4 Manhole Cover Locking Device

M-5 Chain Link Gate

M-6 Chain Link Fence

M-7 Narrow Trenches - Trenching & Backfilling

TABLE OF CONTENTS

M-7A Narrow Trenches - Trenching & Backfilling

M-8 Narrow Trenches - Trenching & Backfilling - Shallow Conduit Depth

M-9 Guard Post and Barricade

M-10 Street Survey Monument

M-11 Bench Mark - Brass Plug

M-12 Datums

M-13 Survey Monuments

M-14 Metric Equivalents

M-15 Joint Trench Utilities Location

M-16 Demountable Post

M-17 Tennis Court Fence Chain Link

M-18 Drinking Fountain

M-19 Fire Hydrant Markers

M-20 Chain Link Fence, Details

M-21 Underground Typical Location, Conversion/Replacement/Upgrade

M-22 Utility Locations in Local and Collector Streets

M-23 Utility Locations Prime Arterials and Expressways

M-24 Pedestrian Protective Railings, Details No. 1

M-25 Pedestrian Protective Railings, Details No. 2

M-26 Concrete Steps

M-27A Disabled Parking Stalls(s)

M-27B Diagonal Disabled Parking Stalls(s)

M-28A Disabled Parking Sign

M-28B Van Accessible Sign Disabled Parking Space

M-29 Pavement Symbol, Disabled Parking

M-30 Guard Rail Standards

M-31 Metal Beam Guard Railing

M-32 Metal Beam Guard Railing, Hardware

M-33 Metal Beam Guard Railing, Posts and Blocks

M-34 Guard Rail Flares

M-35 Guard Rail Flares

M-36 Metal Beam Guard Railing Miscellaneous Details

M-37 Guard Rail End Anchors (Breakaway)

M-38 Guard Rail End Anchors (Breakaway Hardware)

M-39A Barrier and Guard Rail End Anchors

M-39B Barrier and Guard Rail End Anchors

M-39C Barrier and Guard Rail End Anchors

M-39D Barrier and Guard Rail End Anchors

M-39E Barrier and Guard Rail End Anchors

M-40A Guard Rail Connections to Bridge Rails, Retaining Walls and Abutments

M-40B Guard Rail Connections to Bridge Rails, Retaining Walls and Abutments

M-40C Guard Rail Connections to Bridge Rails, Retaining Walls and Abutments

M-40D Guard Rail Connections to Bridge Rails, Retaining Walls and Abutments

M-41A Guard Rail Connection to Bridge Sidewalk and Curbs

M-41B Guard Rail Connection to Bridge Sidewalk and Curbs

TABLE OF CONTENTS

M-41C Guard Rail Connection to Bridge Sidewalk and Curbs

M-41D Guard Rail Connection to Bridge Sidewalk and Curbs

M-42A Concrete Barrier Type 50

M-42B Concrete Barrier Type 50

M-42C Concrete Barrier Type 50

M-42D Concrete Barrier Type 50

M-43A Concrete Barrier Type 50E

M-43B Concrete Barrier Type 50E

M-43C Concrete Barrier Type 50E

M-43D Concrete Barrier Type 50E

M-44A Temporary Railing (Type K)

M-44B Temporary Railing (Type K)

M-44C Temporary Railing (Type K)

M-44D Temporary Railing (Type K)

M-44E Temporary Railing (Type K)

M-45 Break-Away Sign Post

SECTION S - SEWERAGE SYSTEMS

S-2 Manhole- 5'x 3' Diameter

S-3 Sewer Main Cleanout

S-4 Pipe Bedding and Trench Backfill for Sewers

S-6 Concrete Cradle

S-7 Concrete Easement

S-8 Concrete Backfill

S-9 Concrete Anchor

S-10 Cutoff Wall

S-11 Concrete Protection for Existing Sewer Pipe

S-12 Concrete Support for Undercut Sewer Pipe

S-13 House Connection (Sewer Lateral)

S-15 House Connection Sewer Repair

S-16 Cleanout - Force Main

S-17 Manhole -4' x 3' Diameter (for 15" Maximum Diameter Pipe)

S-19 Metallic Tape Locator for Non-Metallic Sewer Pipe.

SECTION W - WATER SYSTEMS

W-1 1" Water Service

W-2 1 1/2" and 2" Water Services

W-3 1" and 2" Manual Releases

W-4 1" and 2" Air and Vacuum Valves

W-5 4" and 6" Air and Vacuum Valves

W-6 2" Blow-Off Assembly, Type A

W-7 2" Blow-Off Assemblies Types B, C and D

W-8 4" and 6" Blow-Off Assemblies Type A

W-9 4" and 6" Blow-Off Assemblies Type B

W-10 Fire Hydrant Installation

W-11 Fire Hydrant Locations

W-12A Valve Well Cover

W-12B Valve Well Frame and Assembly

W-13 Valve Stem Extension

W-14 Air and Vacuum Valve Enclosures

TABLE OF CONTENTS

W-15 Meter Box Locations

W-16 Protection Post

W-17 Concrete Thrust Blocks

W-18 Thrust Block Bearing Areas

W-19 Concrete Valve Blocks

W-20 Anchor Block (Vertical Bend Only)

W-21 Pipe Bedding and Trench Backfill for Water Mains

W-22 Thrust Anchor for Water Main Reducer - 4" through 16"

W-23 Multiple Service Assembly Dead End Main

W-24 Split Butt Strap

W-25 Metallic Tape Locator for Non-Metallic Water Pipe

W-26 Backflow Preventer, Reduced Pressure Principle Detector Assembly for Fire Services - 3" and Larger

W-27 Backflow Preventer Reduced Pressure Principle Assembly 2" and Smaller

W-28 Backflow Preventer Reduced Pressure Principle Detector Assembly 3" and Larger.

APPENDIX A

Traffic Control Plans

CONCRETE STRUCTURES

This drawing is NOT in conformance with latest UBC and should be used with care and judgment.

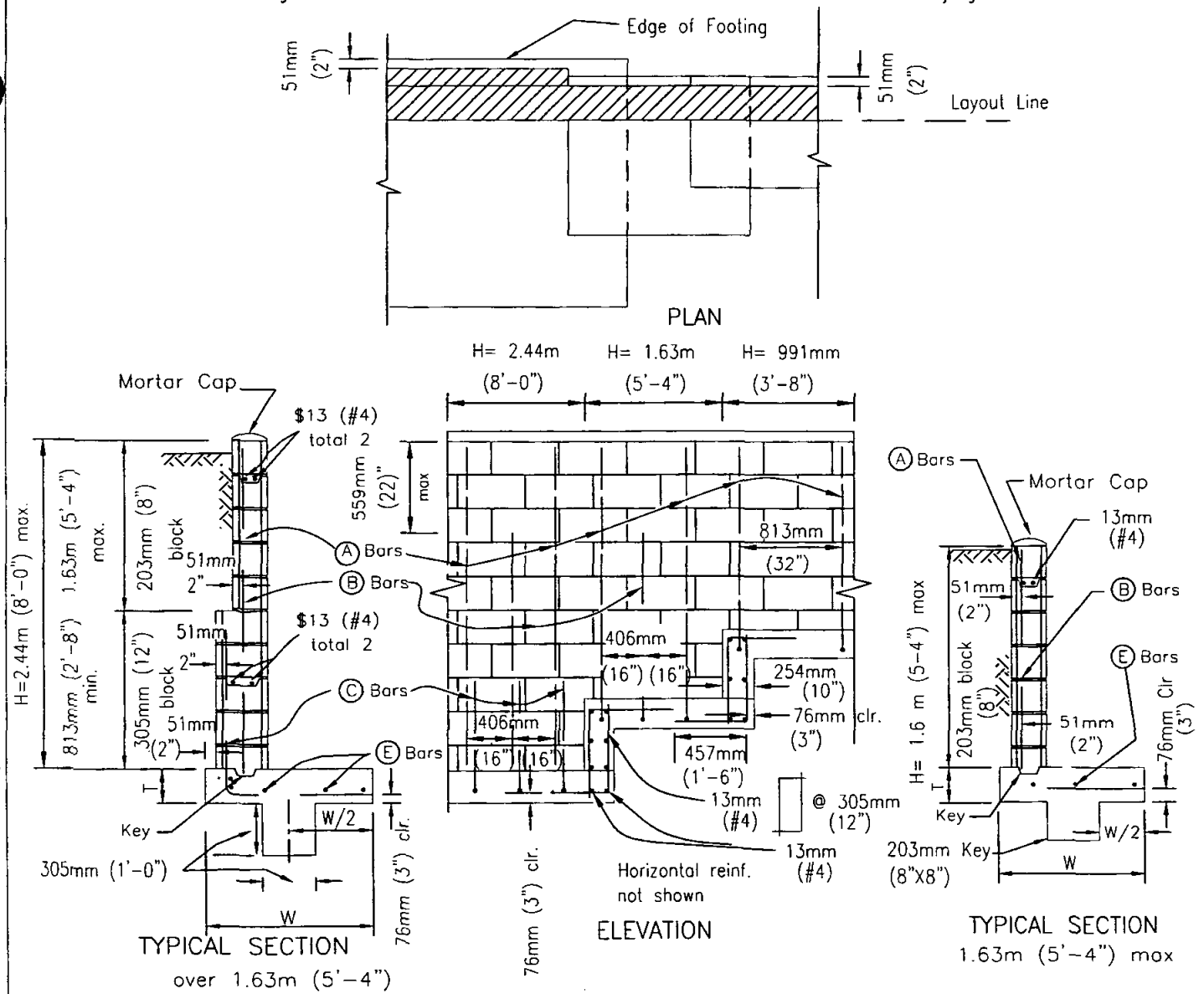

DIMENSIONS AND REINFORCING STEEL			
H (max)	1.12m (3'-8")	1.63m (5'-4")	2.44m (8'-0")
T (min)	203mm 0'-8"	254mm (0'-10")	305mm (1'-0")
W (min)	762mm (2'-4")	1.12m (3'-6")	1.63m (5'-4")
Ⓐ Bars	#13@813mm (#4@32")	$13@813mm (#4@32")	$13@813mm (#4@32")
Ⓑ Bars	——	$13@813mm (#4@32")	$13@813mm (#4@32")
Ⓒ Bars	——	——	406mm (#6@16")
Ⓔ Bars	$13 (#4) total 4	$13 (#4) total 5	$13 (#4) total 6
max soil press.	23.9 Kpa (500psf)	28.7 Kpa (600psf)	38.3 Kpa (800psf)

NOTES
1. See Standard Drawings C-7 and C-8 for additional notes and details.
2. *Fill all block cells with grout.*

Revision	By	Approved	Date
ORIGINAL		Kercheval	12/75
Add Metric		T. Stanton	03/03

SAN DIEGO REGIONAL STANDARD DRAWING

MASONRY RETAINING WALL (LEVEL BACKFILL)

RECOMMENDED BY THE SAN DIEGO REGIONAL STANDARDS COMMITTEE

T. Stanton 3/01/2003

Chairperson R.C.E. 19246 Date

DRAWING NUMBER C-1

This drawing is NOT in conformance with latest UBC and should be used with care and judgment.

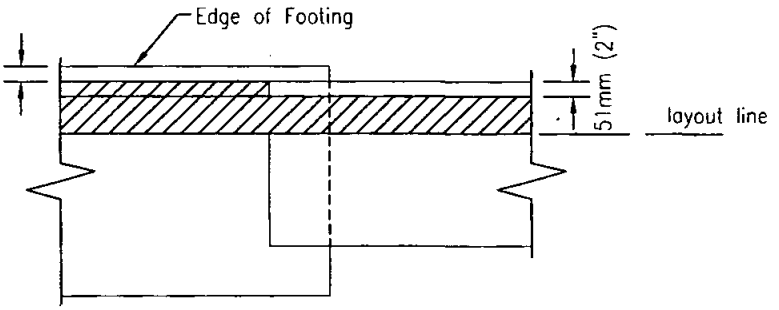

PLAN

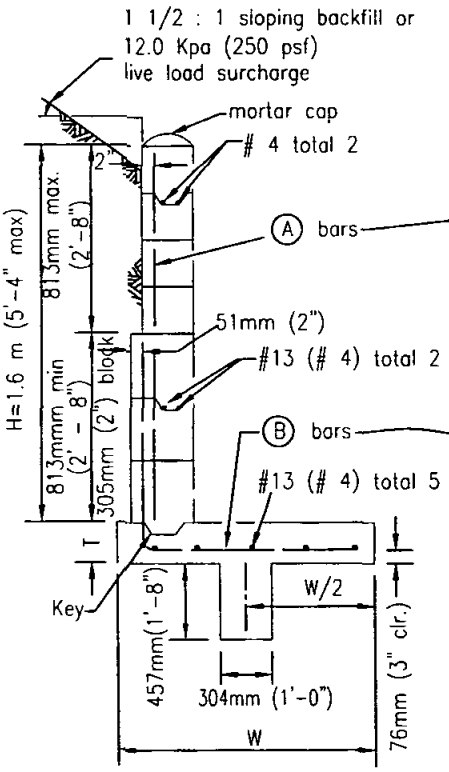

TYPICAL SECTION
over 1.12m (3'-8")

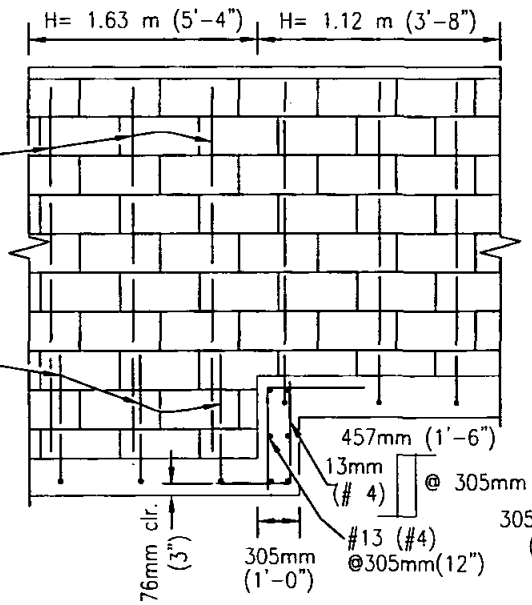

ELEVATION

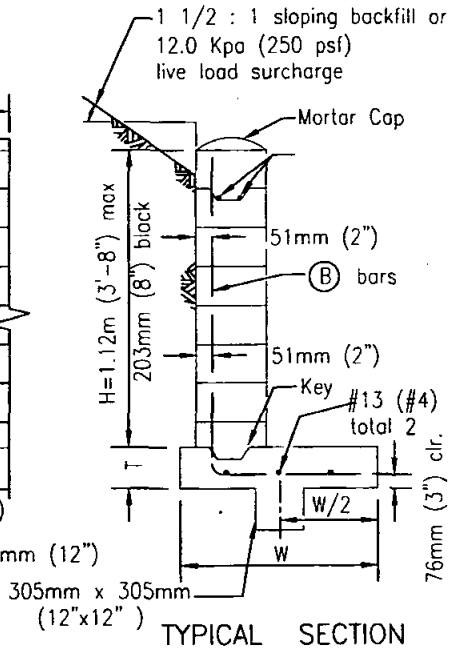

TYPICAL SECTION
1.12 m (3'-8") max.

DIMENSIONS AND REINFORCING STEEL		
H (max)	1.63m (5'-4")	1.12m (3'-8")
T (min)	254mm (0'-10")	254mm (0'-10")
W (min)	1.52m (5'-0")	1.14m (3'-9")
Ⓐ Bars	#13@406mm (#4@16")	——
Ⓑ Bars	#19@406mm (#6@16")	#13@406mm (#4@16")
max soil press.	33.5 Kpa (700psf)	26.3 Kpa (550psf)

NOTES

1. See Standard Drawings C-7 and C-8 for additional notes and details.
2. Fill all block cells with grout.

Revision	By	Approved	Date
ORIGINAL		Kercheval	12/75
Add Metric		T. Stanton	03/03

SAN DIEGO REGIONAL STANDARD DRAWING

MANSONRY RETAINING WALL TYPE 2
(Live load Surcharge or Sloping Backfill)

RECOMMENDED BY THE SAN DIEGO REGIONAL STANDARDS COMMITTEE

T. Stanton 3/01/2003

Chairperson R.C.E. 19246 Date

DRAWING NUMBER C-2

This drawing is NOT in conformance with latest UBC and should be used with care and judgment.

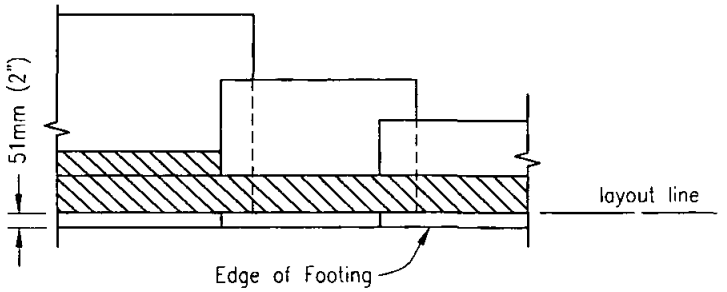

PLAN

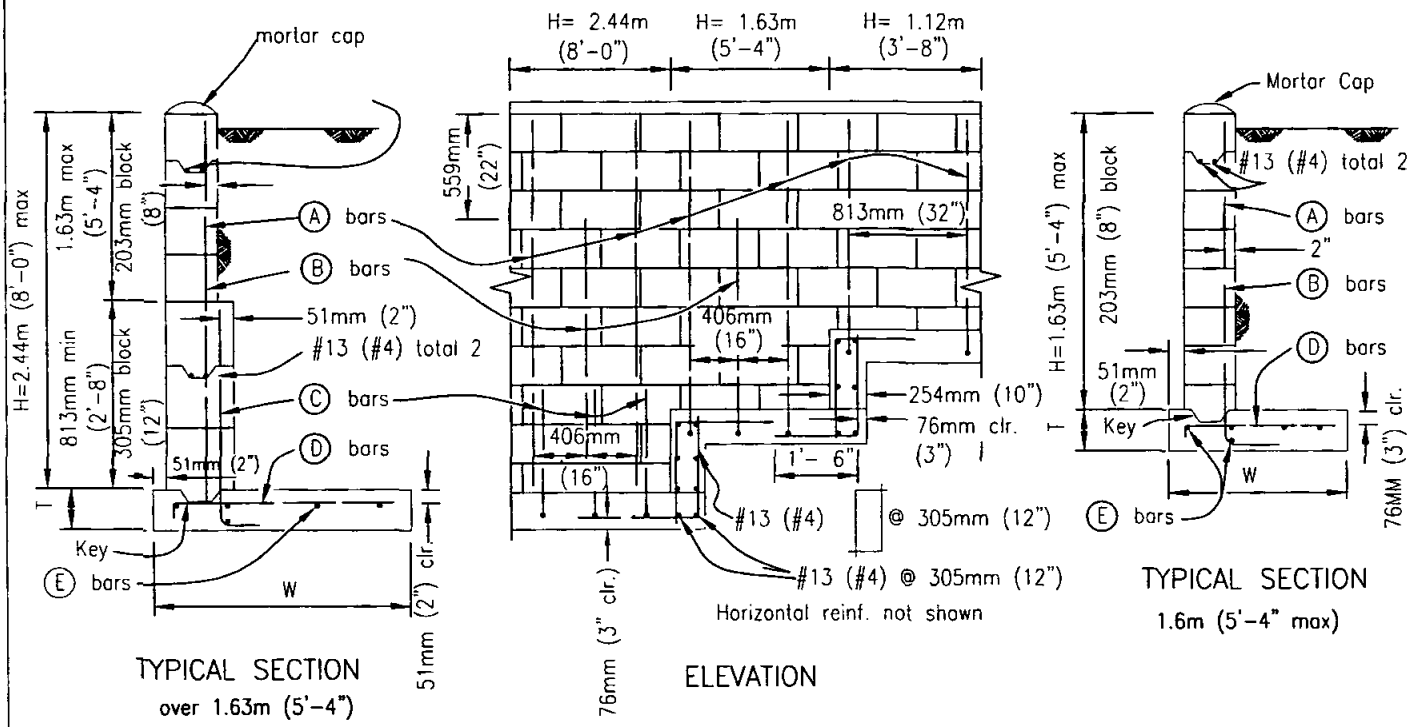

DIMENSIONS AND REINFORCING STEEL			
H (max)	1.12 m (3'-8")	1.63 m (5'-4")	2.44m (8'-0")
T (min)	203 mm 0'-8"	254 mm (0'-10")	305mm (1'-0")
W (min)	762 mm (2'-4")	965mm (3'-2")	1.45m 4'-9"
Ⓐ Bars	#13@813mm (#4@32")	#13@813mm (#4@32")	13mm@813mm (#4@32")
Ⓑ Bars	——	#13@813mm (#4@32")	13mm@813mm (#4@32")
Ⓒ Bars	——	——	406mm (#6@16")
Ⓔ Bars	#13 (#4) total 4	#13 (#4) total 5	13mm (#4) total 6
max soil press. (psf)	7.6 MPa (1100psi)	11.0 MPa (1600psi)	15.2 MPa (2200psi)

NOTES 1. See Standard Drawings C-7 and C-8 for additional notes and details.
2. *Fill all block cells with grout.*

Revision	By	Approved	Date
ORIGINAL		Kercheval	12/75
Add Metric		T. Stanton	03/03

SAN DIEGO REGIONAL STANDARD DRAWING

MASONRY RETAINING WALL TYPE 3
(Level Backfill)

RECOMMENDED BY THE SAN DIEGO REGIONAL STANDARDS COMMITTEE

T. Stanton 3/10/2003
Chairperson R.C.E. 19246 Date

DRAWING NUMBER C-3

This drawing is NOT in conformance with latest UBC and should be used with care and judgment.

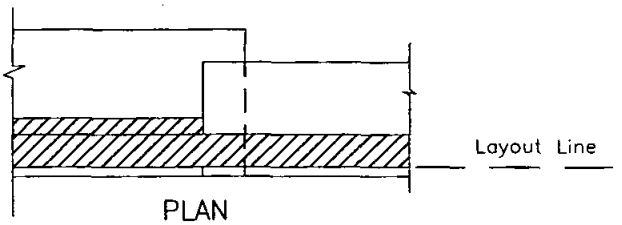

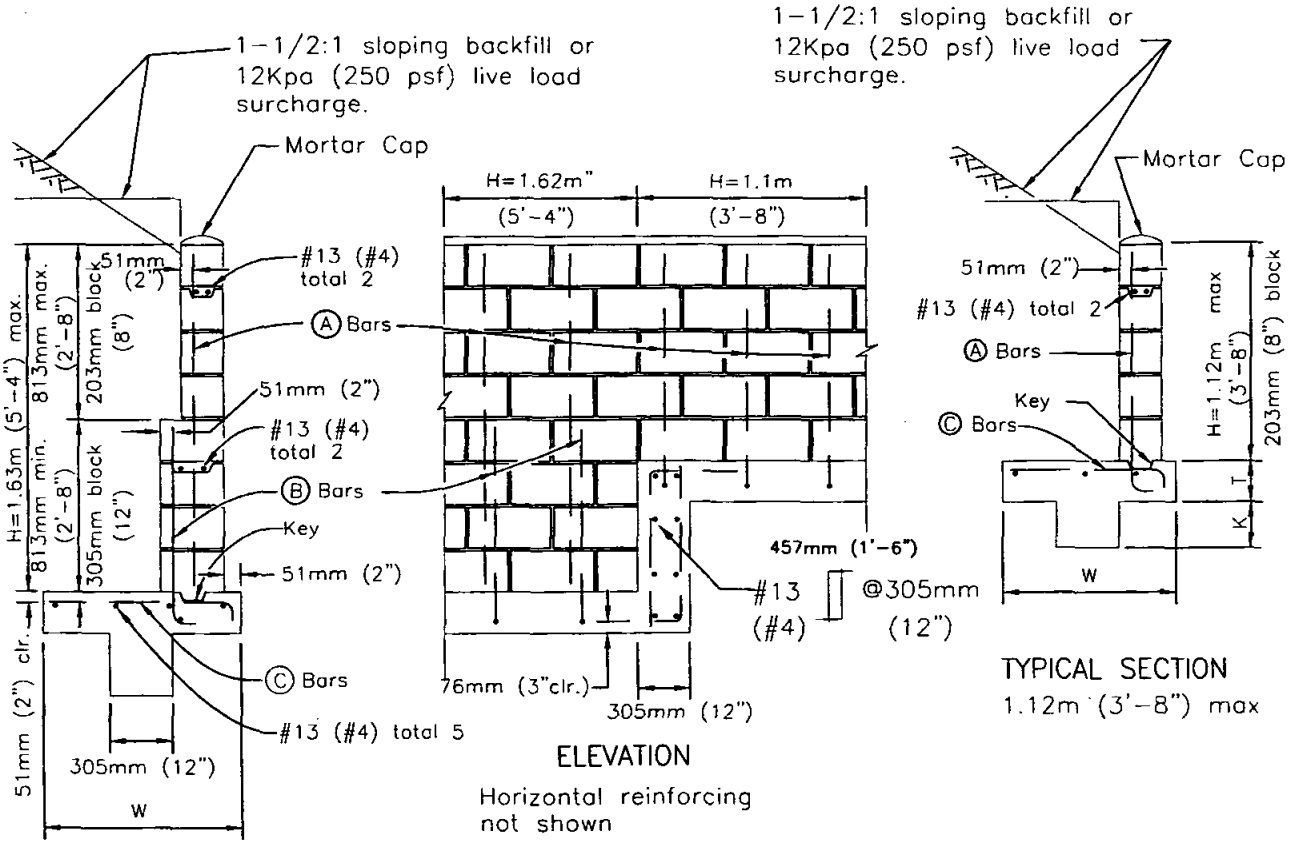

DIMENSIONS AND REINFORCING STEEL				
H (max)	1.63m (5'-4")		1.12m (3'-8")	
T (min)	254mm (0'-10")		203mm (0'-8")	
W (min)	1.22m (4'-0")		3.0m (10')	
Ⓐ Bars	#13(#4)@406mm(16")		#13 (#4)@406mm (16")	
Ⓑ Bars	#19(#6)@406mm(16")		—	
Surcharge	sloping	live load	sloping	live load
Ⓒ Bars	#19(#6)@203mm(8")	#19(#6)@406mm(16")	#19(#6)@406mm(16")	#19(#6)@403mm(16")
K (min)	305mm (1'-0")	203mm (0'-8")	305mm (1'-0")	203mm (0'-8")
Toe Press.	129.3 Kpa (2700 psf)	91 Kpa (1900 psf)	81.4 Kpa (1700 psf)	68.5 Kpa (1430 psf)

NOTES

1. See Standard Drawings C-7 and C-8 for additional notes and details.
2. Fill all block cells with grout.

Revision	By	Approved	Date
ORIGINAL		Parkinson	02/95
Add Metric		T. Stanton	03/03

SAN DIEGO REGIONAL STANDARD DRAWING

MASONRY RETAINING WALL TYPE 4
(Live Load Surcharge or Sloping Backfill)

RECOMMENDED BY THE SAN DIEGO REGIONAL STANDARDS COMMITTEE

T. Stanton 3/01/2003

Chairperson R.C.E. 19246 Date

DRAWING NUMBER C-4

This drawing is NOT in conformance with latest UBC and should be used with care and judgment.

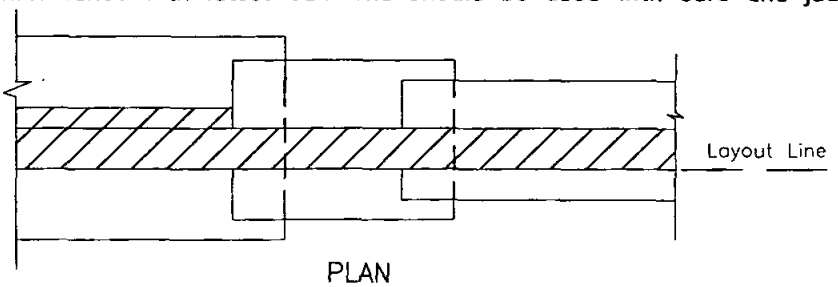

PLAN

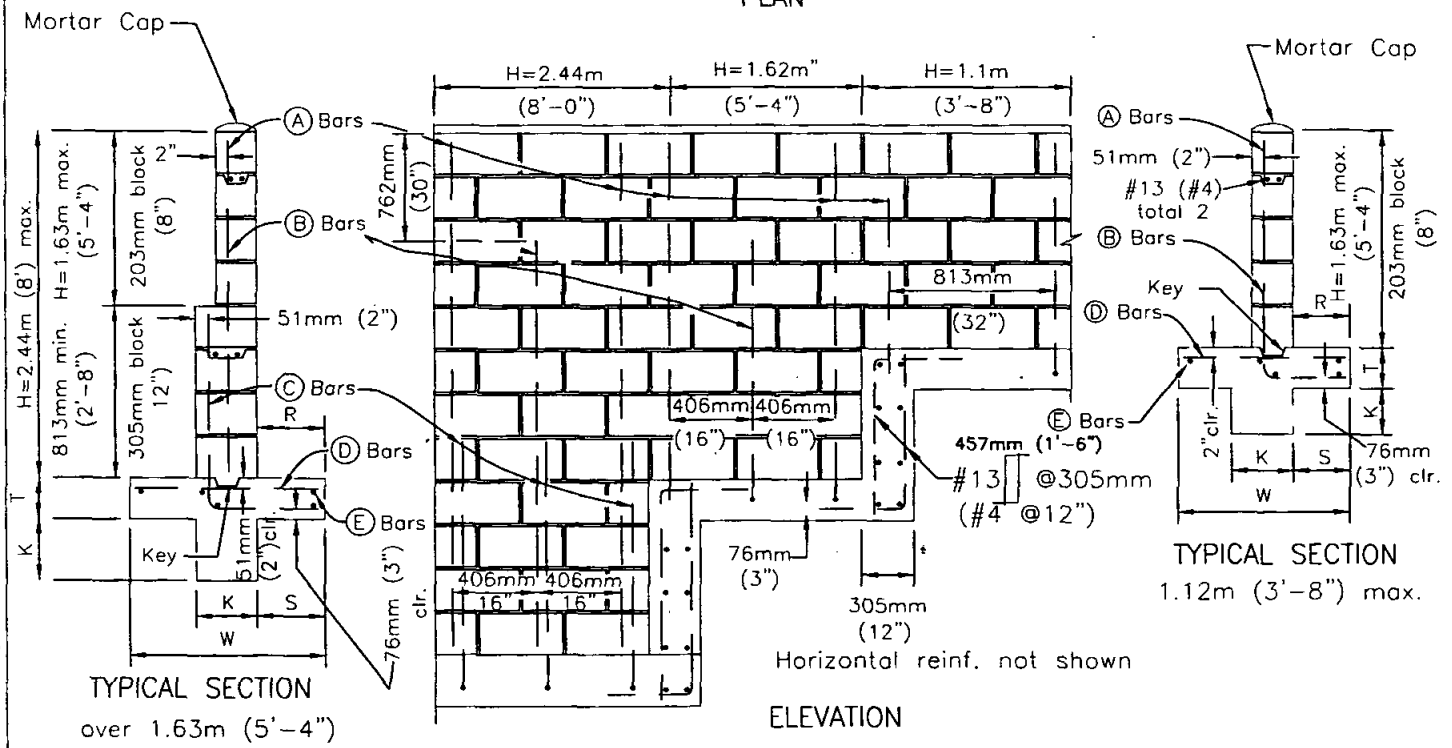

DIMENSIONS AND REINFORCING STEEL			
H (max)	1.12m (3'-8")	1.63m (5'-4")	2.44m (8'-0")
T (min)	203mm (0'-8")	254mm (0'-10")	305mm (1'-0")
W (min)	635mm (2'-1")	940mm (3'-1")	1.25m (4'-3")
R	229mm (0'-9")	356mm (1'-2")	432mm (1'-5")
S	216mm (0'-8 1/2")	318mm (1'-1/2")	495mm (1'-7 1/2")
K	203mm (0'-8")	203mm (0'-8")	305mm (1'-0")
Ⓐ Bars	#13(#4)@813mm(32")	#13(#4)@813mm(32")	#13(#4)@813mm(32")
Ⓑ Bars	——	#13(#4)@813mm(32")	#13(#4)@813mm(32")
Ⓒ Bars	——	——	#22(#7)@406mm(16")
Ⓓ Bars	#13(#4)@813mm(32")	#13(#4)@406mm(16")	#13(#4)@406mm(16")
Ⓔ Bars	#13(#4) total 5	#13(#4) total 5	#13(#4) total 6
Max. Toe Press.	37.1 Kpa (774 psf)	49.3 Kpa (1,030 psf)	79.5 Kpa (1,660psf)

NOTES

1. See Standard Drawings C-7 and C-8 for additional notes and details.
2. Fill all block cells with grout.

Revision	By	Approved	Date
ORIGINAL		Parkinson	2/95
Add Metric		T. Stanton	03/03

SAN DIEGO REGIONAL STANDARD DRAWING

MASONRY RETAINING WALL
(Level Backfill)

RECOMMENDED BY THE SAN DIEGO REGIONAL STANDARDS COMMITTEE

T. Stanton 3/10/2003
Chairperson R.C.E. 19246 Date

DRAWING NUMBER C-5

This drawing is NOT in conformance with latest UBC and should be used with care and judgment.

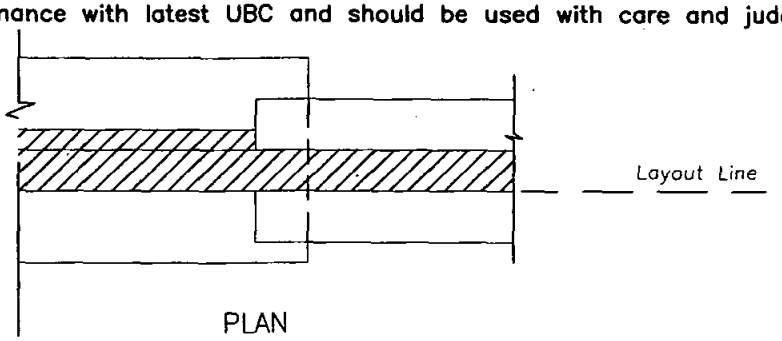

PLAN

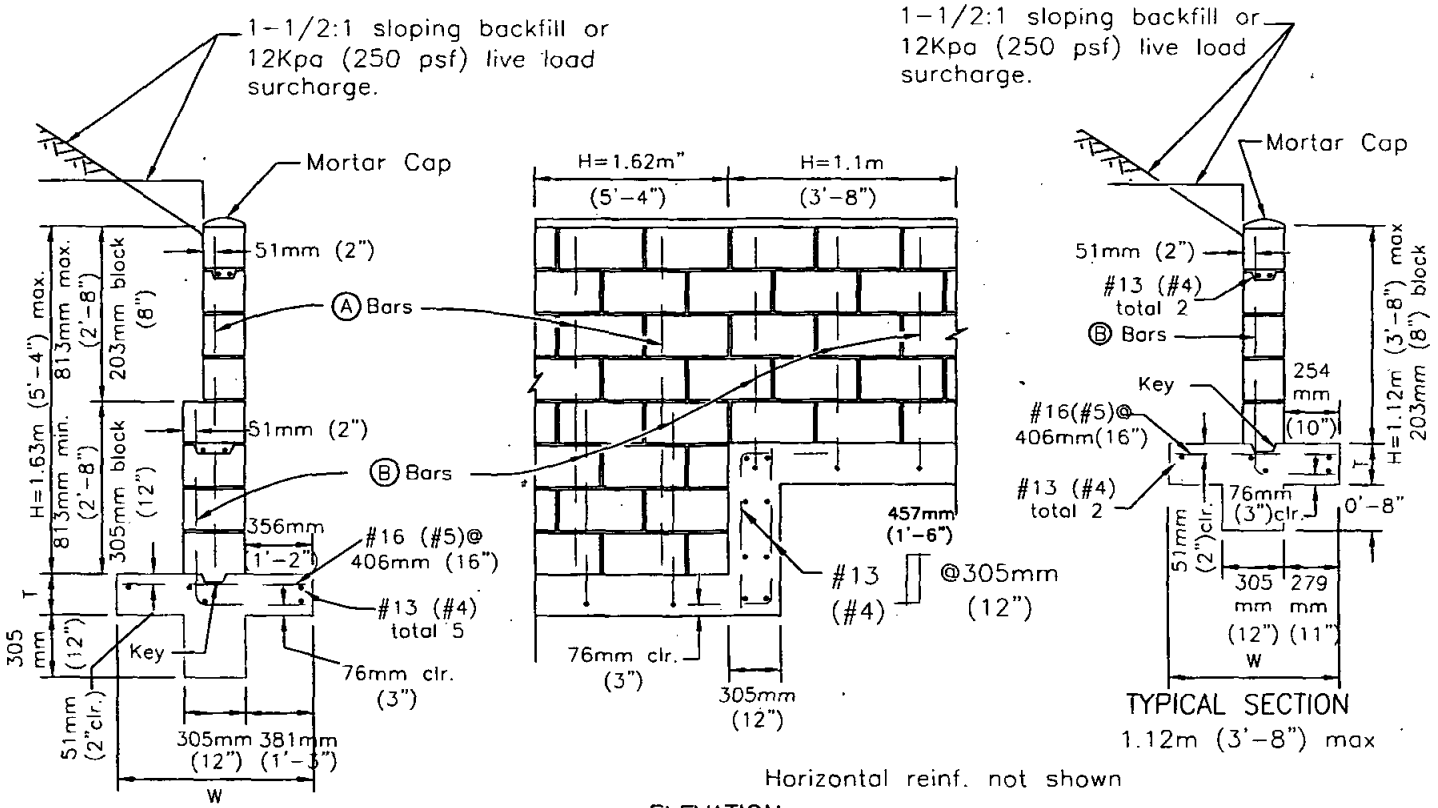

DIMENSIONS AND REINFORCING STEEL		
H (max)	1.63m (5'-4")	1.12m (3'-8")
T (min)	254mm (0'-10")	203mm (0'-8")
W (min)	1.17m (3'-10")	838mm (2'-9")
Ⓐ Bars	#13(#4)@406mm(16")	——
Ⓑ Bars	#19(#6)@406mm(16")	#13(#4)@406mm(16")
Max. Toe Press.	95.8 Kpa (2,000 psf)	67.0 Kpa (1,400 psf)

NOTES

1. See Standard Drawings C-7 and C-8 for additional notes and details.
2. Fill all block cells with grout.

Revision	By	Approved	Date
ORIGINAL		Parkinson	2/95
Add Metric		T. Stanton	03/03

SAN DIEGO REGIONAL STANDARD DRAWING

MASONRY REATAINING WALL TYPE 6
(Live Load Surcharge or Sloping Backfill)

RECOMMENDED BY THE SAN DIEGO REGIONAL STANDARDS COMMITTEE

T. Stanton 3/10/2003

Chairperson R.C.E. 19246 Date

DRAWING NUMBER C-6

DESIGN CONDITIONS:

Walls are to be used for the loading conditions shown for each type wall. Design H shall not be exceeded. Footing key is required except as shown otherwise or when found unnecessary by the Engineer. Special footing design is required where foundation material is incapable of supporting toe pressure listed in table.

DESIGN DATA:

Reinforced Concrete:

Fc=8.3 Mpa (1200 psi) F'c=20.7 Mpa (3000 psi)
Fs=138 Mpa (20,000 psi) n=10

Reinforced Masonry:

F'm=41.4 Mpa (600 psi) Fm=1.4 Mpa (200 psi)
Fs=138 Mpa (20,000 psi) n=50
Earth=1922 kg/cu m (120 pcf) and Equivalent Fluid Pressure=1.76 kg/sq m (36 psf) per 305mm (foot) of height.
Walls shown for 1 1/2:1 unlimited sloping surcharge are designed in accordance with Rankline's formula for unlimited sloping surcharge with a ø = 33° 42'.

REINFORCEMENT:

Intermediate grade, hard grade, or rail steel deformation shall conform ASTM A615, A616, A617. Bars shall lap 40 diameters, where spliced, unless otherwise shown on the plans. Bends shall conform to the Manual of Standard Practice, A.C.1. Backing for hooks is four diameters. All bar embedments are clear distances to outside of bar. Spacing for parallel bars is center to center bars.

MASONRY:

All reinforced masonry retaining walls be constructed of regular or light weight standard units conforming to the "Standard Specifications for Public Works Construction."

JOINTS:

Vertical control joints shall be placed at 9.75m (32') intervals maximum. Joints shall be designed to resist shear and other lateral forces while permitting longitudinal movement. Vertical expansion joints shall be placed at 29.3m (96') intervals maximum.

CONCRETE:

Footing concrete shall be 332 kg/M3-C-22Mpa (560-C-3250), using B aggregate when placing conditions permit.

BACKFILL:

No backfill material shall be placed against masonry retaining walls until grout has reached design strength or until grout has cured for a minimum of 28 days. Compaction of backfill material by jetting or ponding with water will not be permitted. Each layer of backfill shall be moistened as directed by the Engineer and thoroughly tamped, rolled or otherwise compacted until the relative compacting is not less than 90%.

FENCING:

Safety fencing shall be installed at the top of the wall as required by the agency.

INSPECTIONS:

Call for inspections as follows:

A. When the footing has been formed, with the steel tied securely in final position, and is ready for the concrete to be placed.

B. Where cleanout holes are not provided:

(1) After the blocks have been laid up to a height of 1.22m (4') or full height for walls up to 1.52m (5'), with steel in place but before the grout is poured, and.....

(2) After the first lift is properly grouted, the blocks have been laid up to the top of the wall with the steel tied securely in place but before the upper lift is grouted.

Where cleanout holes are provided:

After the blocks have been laid up to the top of the wall, with the steel tied securely in place, but before grouting.

C. After grouting is complete and after rock or rubble wall drains are in place but before earth backfill is placed.

D. Final inspection when all work has been completed.

CONCRETE GROUT AND MORTAR MIXES:

Concrete grout shall attain a minimum compressive strength of 13.8 Mpa (2,000 psi) in 28 days and mortar shall attain 12.4 Mpa (1,800) psi in 28 days. All cells shall be filled with grout. Rod or vibrate consolidation. Bring grout within 10 minutes of pouring to insure grout to a point 51mm (2") from the top of masonry units when grouting of second lift is to be continued at another time.

MORTAR KEY:

To insure proper bonding between the footing and the first course of block, a mortar key shall be formed by embedding a flat 2 x 4 flush with and at the top of the freshly poured footing. The 2 x 4 should be removed after the concrete has started to harden (approximately 1 hour).
A mortar key may be omitted if the first course of block is set into the fresh concrete when the footing is poured, and a good bond is obtained.

WALL DRAINS:

Wall drains shall be provided in accordance with Standard Drawing C-8.

SOIL:

All footings shall extend at least 305mm (12") into undisturbed natural soil or approved compacted fill. Soil should be dampened prior to placing concrete in footings.

Revision	By	Approved	Date
ORIGINAL		A. Kercheval	12/75
Add Metric		T. Stanton	03/03

SAN DIEGO REGIONAL STANDARD DRAWING

GENERAL NOTES FOR MASONRY RETAINING WALLS

RECOMMENDED BY THE SAN DIEGO REGIONAL STANDARDS COMMITTEE

T. Stanton 3/10/2003

Chairperson R.C.E. 19246 Date

DRAWING NUMBER C-7

This drawing is NOT in conformance with latest UBC and should be used with care and judgment.

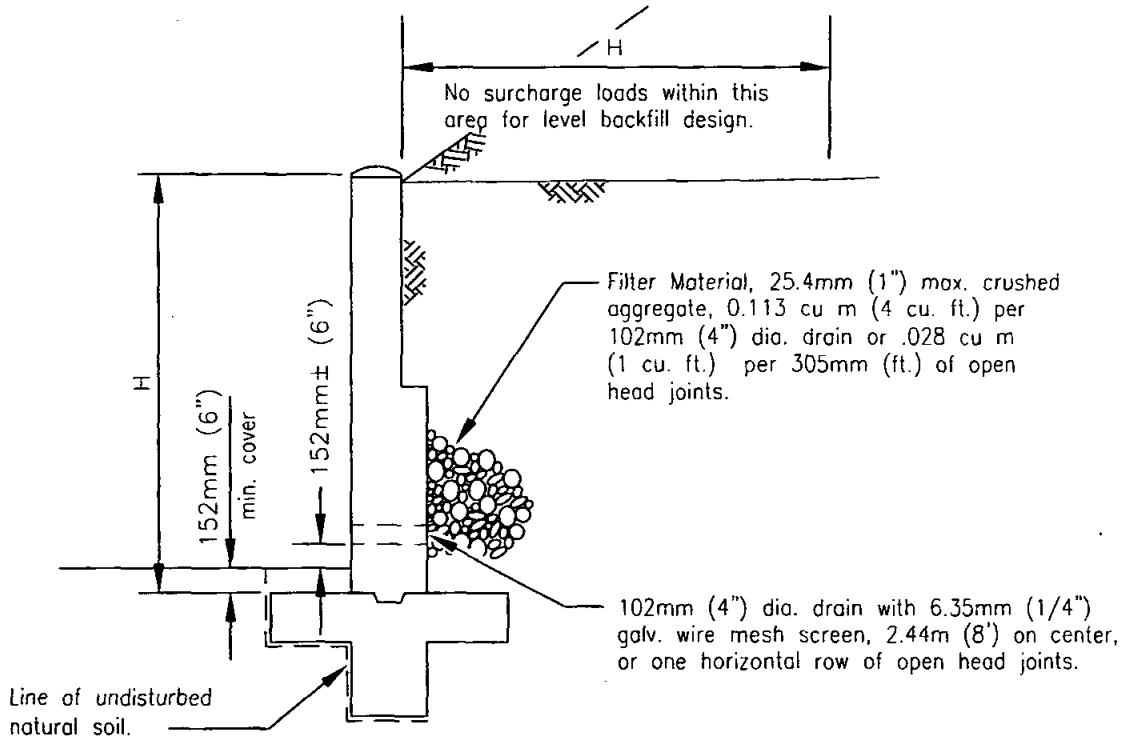

TYPICAL SECTION

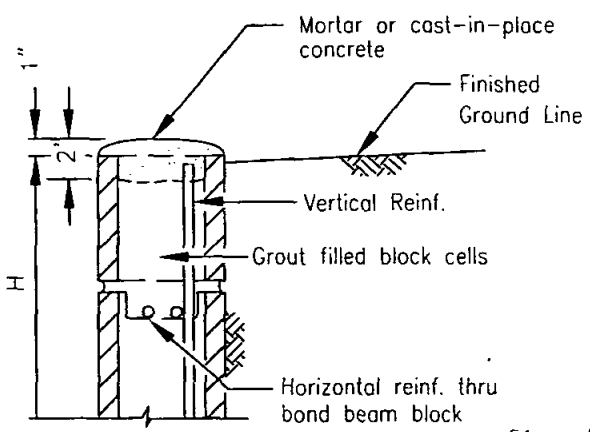

CAP DETAIL

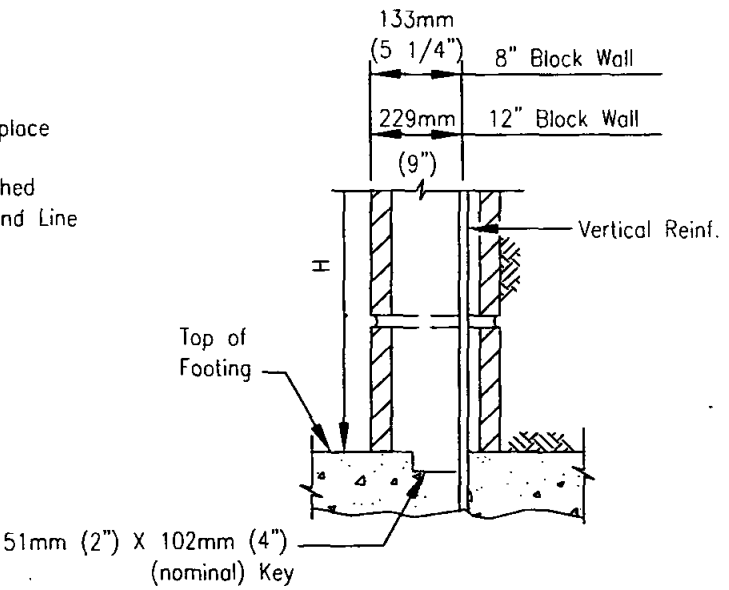

KEY DETAIL

NOTES

1. All masonry retaining walls shall be constructed with cap, key and drainage details as shown hereon.
2. 102mm (4") diameter drain may be formed by placing a block on it's side.

Revision	By	Approved	Date
ORIGINAL		Kercheval	12/75
Add Metric		T. Stanton	03/03

SAN DIEGO REGIONAL STANDARD DRAWING

DETAILS FOR MASONRY RETAINING WALL

RECOMMENDED BY THE SAN DIEGO REGIONAL STANDARDS COMMITTEE

3/10/2003

Chairperson R.C.E. 19246 Date

DRAWING NUMBER C-8

This drawing is NOT in conformance with latest UBC and should be used with care and judgment.

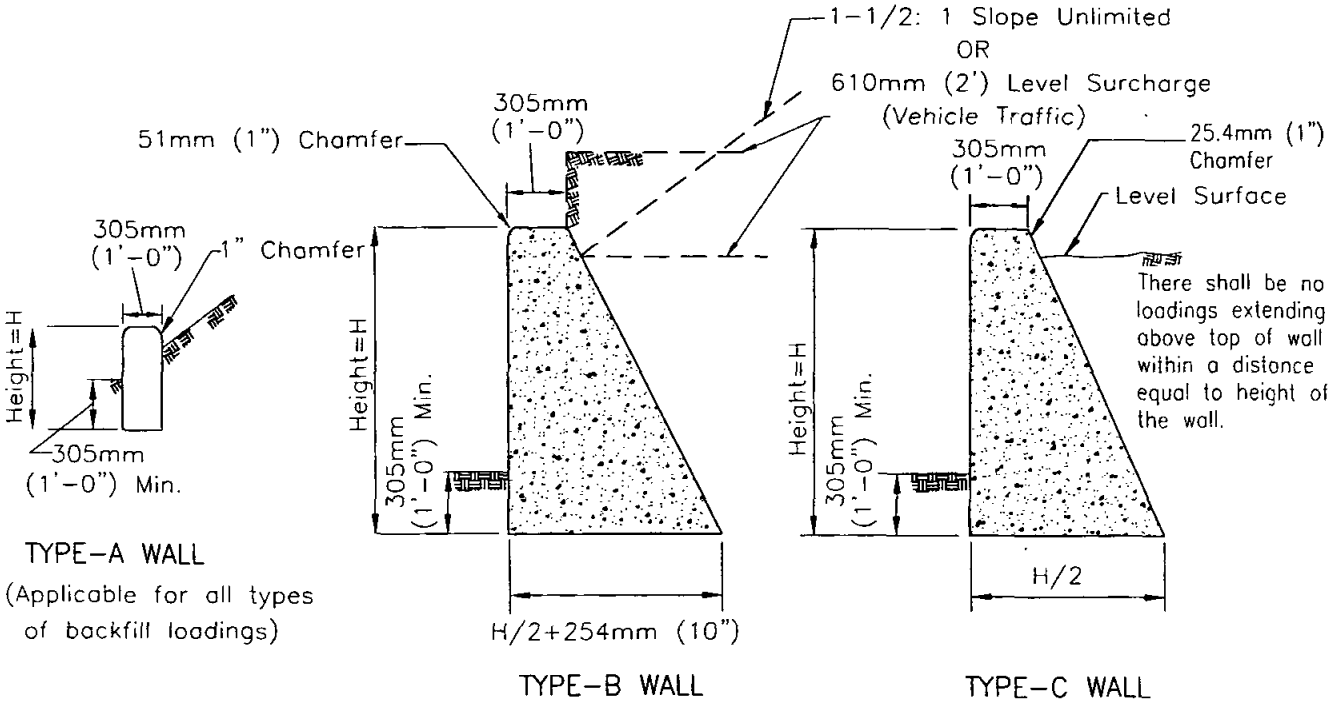

TYPE-A WALL
(Applicable for all types of backfill loadings)

TYPE-B WALL

TYPE-C WALL

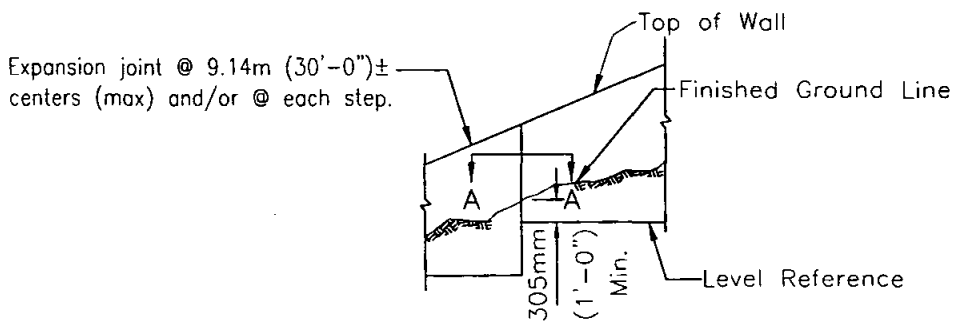

ELVEVATION

WALL TYPE	HEIGHT	BASE	CONCRETE CU M - CF/FT
A	457mm (1'-6")	305mm (1'-0")	.042 cu m (1.50 cu ft.)
	610mm (2'-0")	305mm (1'-0")	.057 cu m (2.00 cu ft.)
B	914mm (3'-0")	711mm (2'-4")	1.41 cu m (4.99 cu ft.)
	1.22m (4'-0")	864mm (2'-10")	.217 cu m (7.66 cu ft.)
	1.52m (5'-0")	1.02m (3'-4")	.306 cu m (10.82 cu ft.)
	1.83m (6'-0")	1.17m (3'-10")	.410 cu m (14.49 cu ft.)
C	914mm (3'-0")	457mm (1'-6")	.106 cu m (3.75 cu ft.)
	1.22m (4'-0")	610mm (2'-0")	.170 cu m (6.00 cu ft.)
	1.52m (5'-0")	762mm (2'-6")	.248 cu m (8.75 cu ft.)
	1.83m (6'-0")	914mm (3'-0")	.340 cu m (12.00 cu ft.)

NOTE

See Standard Drawings C-10 for Section A-A, notes and details.

Revision	By	Approved	Date
ORIGINAL		Kercheval	12/75
Add Metric		T. Stanton	03/03

SAN DIEGO REGIONAL STANDARD DRAWING

GRAVITY RETAINING WALLS

RECOMMENDED BY THE SAN DIEGO REGIONAL STANDARDS COMMITTEE

T. Stanton 3/10/2003

Chairperson R.C.E. 19246 Date

DRAWING NUMBER C-9

This drawing is NOT in conformance with latest UBC and should be used with care and judgment.

CONCRETE

Concrete shall be 332 kg/M^3-C-22Mpa (560-C-3250)

DESIGN CONDITIONS

Walls are to be used for the loading conditions shown for each type wall. Design H may be xceeded by six inches before going to next size.

DESIGN DATA

Fc = 8.3 Mpa (1200 psi)
F'c = 20.7 Mpa (3000 psi)
Earth = 1922 kg/cu m (120 pcf)
and equivalent fluid pressure = 176 kg/sq m (36 psf) per 305mm (foot) of height

Walls shown for 1-1/2:1 unlimited sloping sucharge are designed in accordance with Rankine's Formula for unlimited sloping surcharge with ϕ = 33° 13m (42').
Note: Maximum toe pressure under wall footing = 143.6 Kpa (1-1/2 tons/sq. ft.). Special design required where footing material is incapable of supporting this pressure.

EXCAVATION AND BACKFILL

Compaction of backfill material by jetting or ponding with water will not be permitted.

Each layer of backfill shall be moistened as directed by the Engineer and thoroughly tamped, rolled or otherwise compacted until the relative compaction is not less than 90 percent.

No backfill material shall be deposited against concrete retaining walls until the concrete has developed a strength of 17 Mpa (2,500 psi) in compression as determined by test cylinders, or until 28 days after wall has been placed.

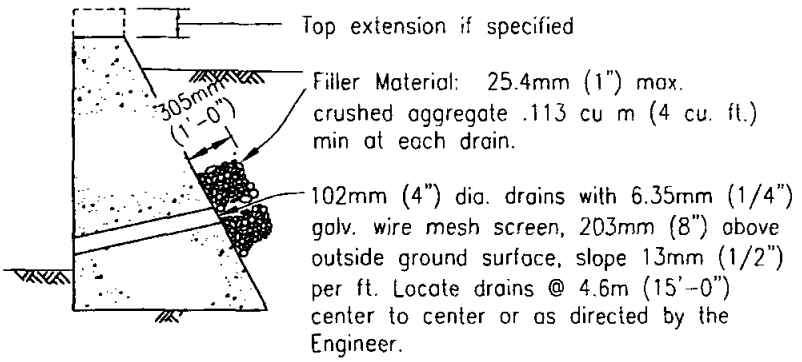

TYPICAL DRAINAGE
WHEN H IS GREATER THAN 1.22m (4'-0")

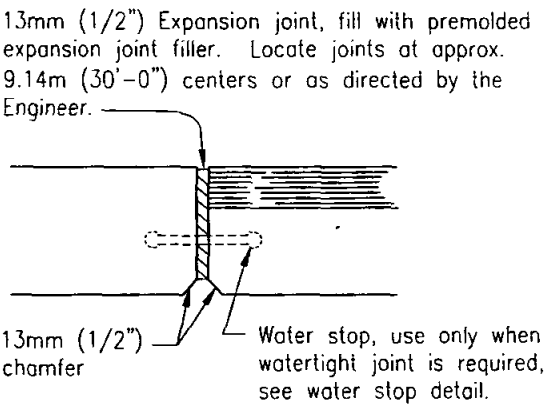

SECTION A-A

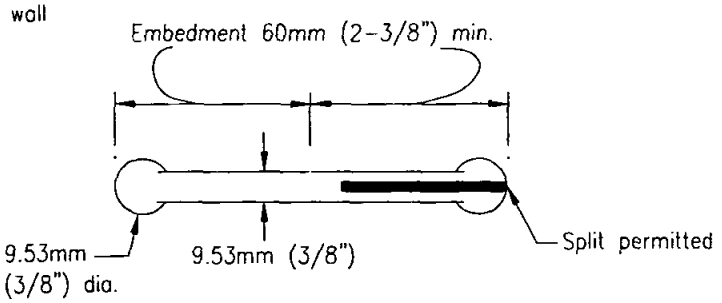

RUBBER WATERSTOP
Use only when watertight joint is required.

Revision	By	Approved	Date
ORIGINAL		Kercheval	12/75
Add Metric		T. Stanton	03/03

SAN DIEGO REGIONAL STANDARD DRAWING

GENERAL NOTES AND DETAILS FOR GRAVITY RETAINING WALLS

RECOMMENDED BY THE SAN DIEGO REGIONAL STANDARDS COMMITTEE

3/10/2003

Chairperson R.C.E. 19246 Date

DRAWING NUMBER C-10

This drawing is NOT in conformance with latest UBC and should be used with care and judgment.

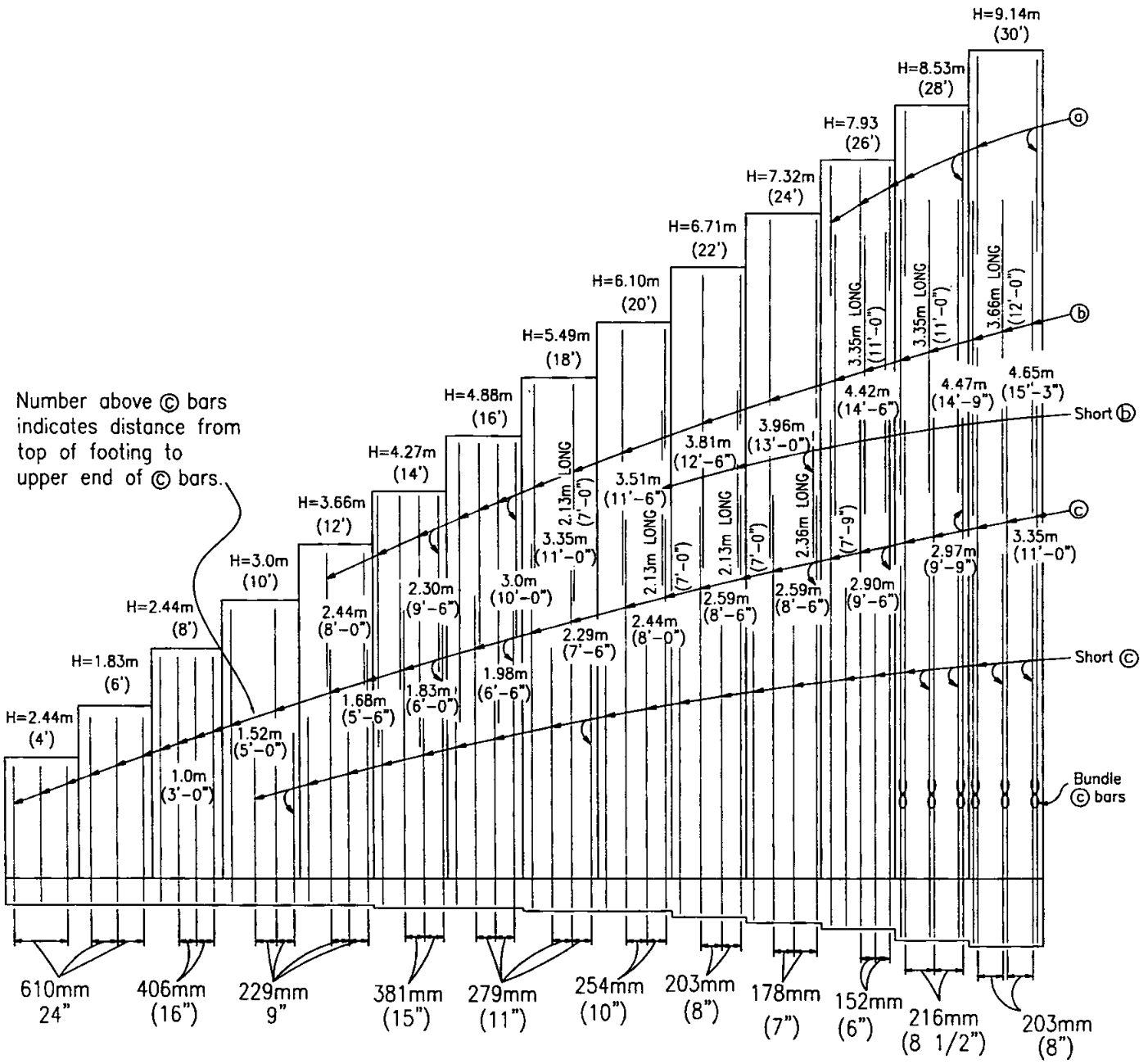

ELEVATION

Notes:
For SPREAD FOOTING SECTION see C-11B
For TYPICAL LAYOUT EXAMPLE see C-11C
For 45T PILE FOOTING SECTION see C-11C
For TABLE OF REINFORCING STEEL DIMENSIONS AND DATA see C-11D

Revision	By	Approved	Date
ORIGINAL		Kercheval	12/75
Add Metric		T. Stanton	03/03

SAN DIEGO REGIONAL STANDARD DRAWING

REINFORCED CONCRETE RETAINING WALL
TYPE 1

RECOMMENDED BY THE SAN DIEGO REGIONAL STANDARDS COMMITTEE

T. Stanton 3/10/2003
Chairperson R.C.E. 19246 Date

DRAWING NUMBER C-11A

This drawing is NOT in conformance with latest UBC and should be used with care and judgment.

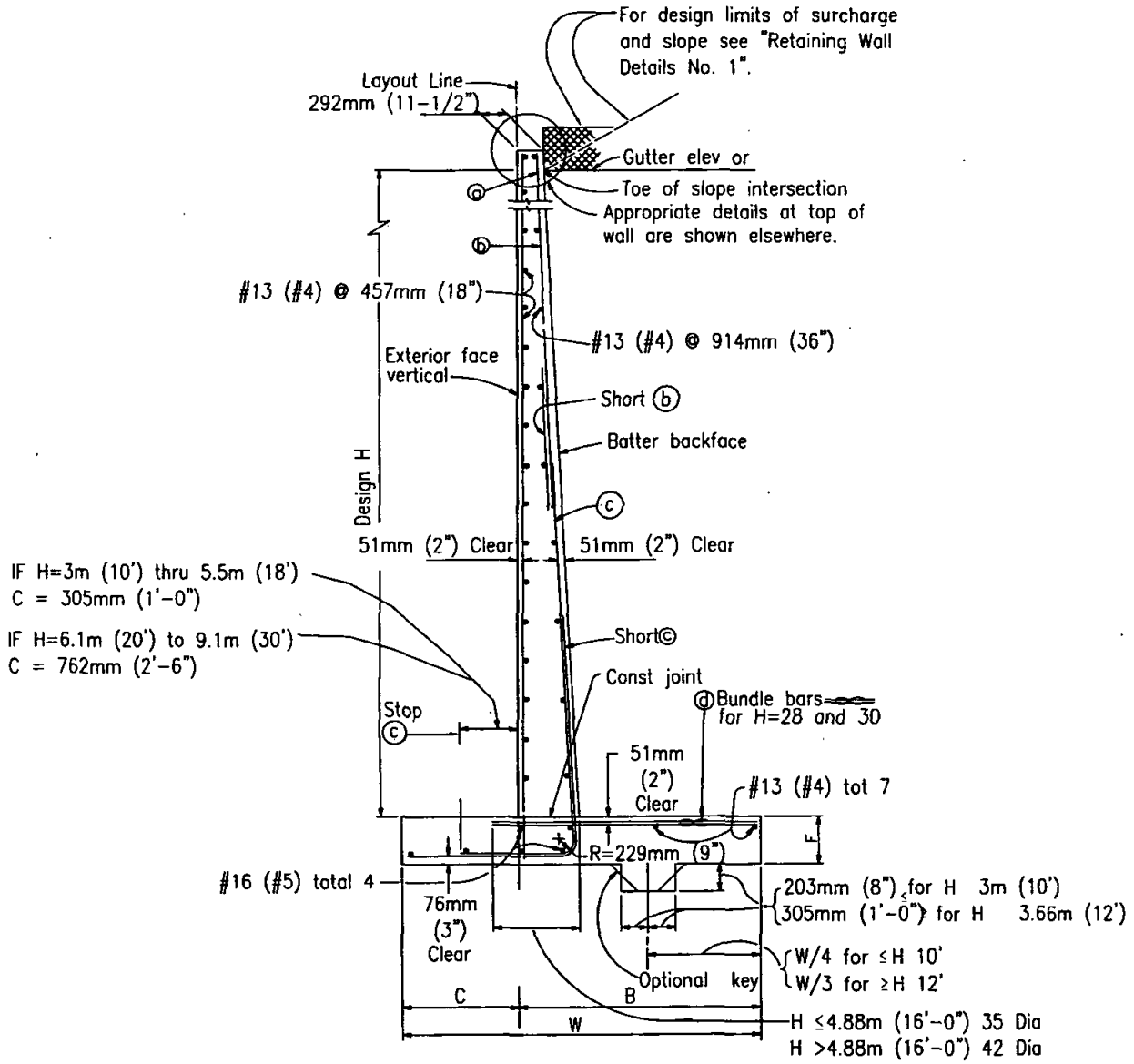

SPREAD FOOTING SECTION

Note:
For details not shown and drainage notes see "Retaining Wall Details No.1." Standard Drawing C-13.
Quantities apply to Design H portion and exclude the added portion above "Gutter Elevation".

Revision	By	Approved	Date
ORIGINAL		Kercheval	12/75
Add Metric		T. Stanton	03/03

SAN DIEGO REGIONAL STANDARD DRAWING

REINFORCED CONCRETE RETAINING WALL
TYPE 1

RECOMMENDED BY THE SAN DIEGO REGIONAL STANDARDS COMMITTEE

T. Stanton 3/10/2003

Chairperson R.C.E. 19246 Date

DRAWING NUMBER C-11B

This drawing is NOT in conformance with latest UBC and should be used with care and judgment.

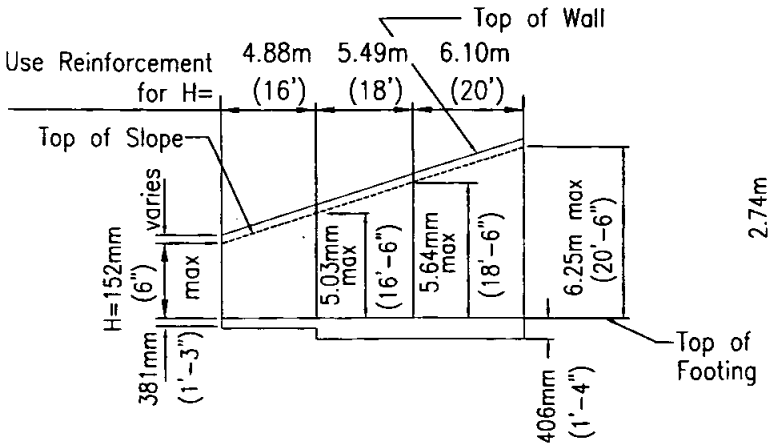

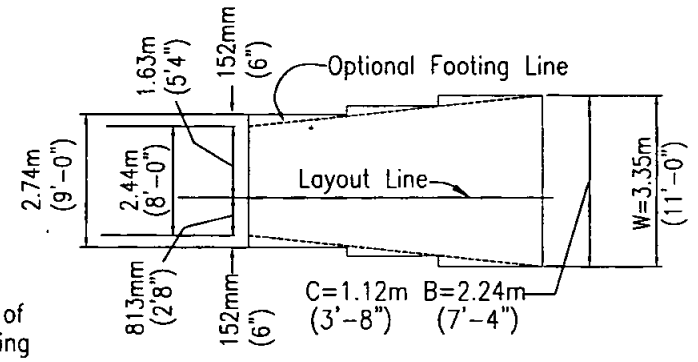

TYPICAL LAYOUT EXAMPLE

For joints required, see Details 3-3 and 3-4, drawing C-15

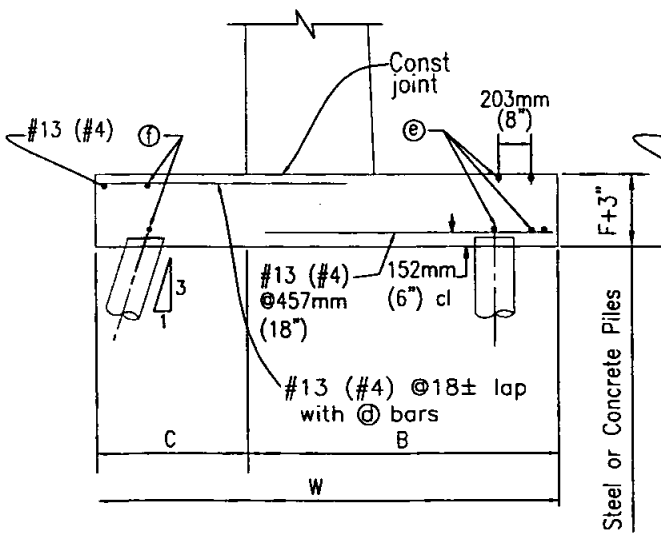

45T PILE FOOTING SECTION

H=7.32m (24') Thru H=9.14m (30')

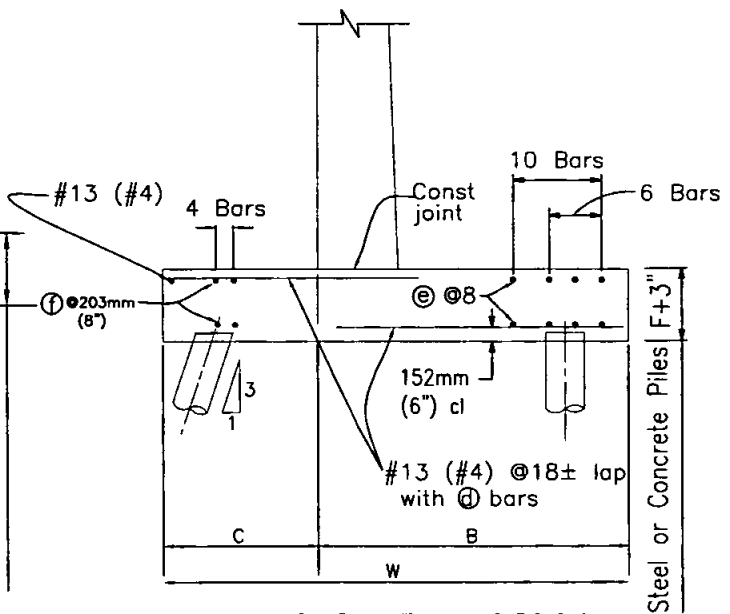

45T PILE FOOTING SECTION

H=1.22m (4') Thru H=6.71m (22')

Revision	By	Approved	Date
ORIGINAL		Kercheval	12/75
Add Metric		T. Stanton	03/03

SAN DIEGO REGIONAL STANDARD DRAWING

REINFORCED CONCRETE RETAINING WALL TYPE 1

RECOMMENDED BY THE SAN DIEGO REGIONAL STANDARDS COMMITTEE

T. Stanton 3/10/2003

Chairperson R.C.E. 19246 Date

DRAWING NUMBER C-11C

This drawing is NOT in conformance with latest UBC and should be used with care and judgment.

TABLE OF REINFORCING STEEL DIMENSIONS AND DATA

Design H			4'	6'	8'	10'	12'	14'	16'	18'	20'	22'	24'	26'	28'	30'
W		Metric	965mm	1.27m	1.58m	1.88m	2.18m	2.44m	2.74m	3.0 m	3.35m	3.66m	4.04m	4.34m	4.65m	5.10m
		U.S.	3'-2"	4'-2"	5'-2"	6'-2"	7'-2"	8'-0"	9'-0"	10'-0"	11'-0"	12'-0"	13'-3"	14'-3"	15'-3"	16'-9"
C		Metric	305mm	406mm	508mm	610mm	711mm	813mm	1.0 m	1.02m	1.12m	1.22m	1.35m	1.45m	1.55m	1.65m
		U.S.	1'-0"	1'-4"	1'-8"	2'-0"	2'-4"	2'-8"	3'-0"	3'-4"	3'-8"	4'-0"	4'-5"	4'-9"	5'-1"	5'-5"
B		Metric	660mm	864mm	1.07m	1.27m	1.47m	1.63m	1.83m	2.03m	2.24m	2.44m	2.69m	2.90m	3.10m	3.45m
		U.S.	2'-2"	2'-10"	3'-6"	4'-2"	4'-10"	5'-4"	6'-0"	6'-8"	7'-4"	8'-0"	8'-10"	9'-6"	10'-2"	11'-4"
F Spread Ftg.		Metric	356mm	356mm	356mm	356mm	356mm	381mm	381mm	406mm	406mm	457mm	508mm	584mm	660mm	711mm
		U.S.	1'-2"	1'-2"	1'-2"	1'-2"	1'-2"	1'-3"	1'-3"	1'-4"	1'-4"	1'-6"	1'-8"	1'-11"	2'-2"	2'-4"
Batter			1/2:12	1/2:12	1/2:12	1/2:12	1/2:12	1/2:12	1/2:12	1/2:12	1/2:12	1/2:12	5/8:12	3/4:12	3/4:12	7/8:12
ⓐbars		Metric	—	—	—	—	—	—	—	—	—	—	—	#13● 610mm	#19● 432mm	#19● 406mm
		U.S.	—	—	—	—	—	—	—	—	—	—	—	#6●24	#6●17	#6●16
ⓑbars		Metric	—	—	—	—	#13● 457mm	#19● 762mm	#19● 559mm	#22● 559mm	#25● 508mm	#25● 406mm	#25● 356mm	#25● 305mm	#25● 13mm	#25● 203mm
		U.S.	—	—	—	—	#4●18	#6●30	#6●22	#7●22	#8●20	#8●16	#8●14	#8●12	#8●8-1/2	#8●8
ⓒbars		Metric	#16● 610mm	#16● 610mm	#16● 406mm	#16● 229mm	#19● 229mm	#29● 381mm	#29● 279mm	#32● 279mm	#36● 254mm	#36● 203mm	#36● 176mm	#36● 152mm	#32● 216mm ‰	#32● 203mm ‰
		U.S.	#5●24	#5●24	#5●16	#5●9	#6●9	#9●15	#9●11	#10●11	#11●10	#11●8	#11●7	#11●6	#10●8-1/2‰	#10●8 ‰
ⓓbars		Metric	#16● 610mm	#16● 610mm	#13● 406mm	#13● 229mm	#16● 229mm	#25● 381mm	#25● 279mm	#32● 279mm	#32● 279mm	#32● 203mm	#32● 178mm	#32● 152mm	#29● 216mm ‰	#29● 203mm ‰
		U.S.	#5●24	#5●24	#4●16	#4●9	#5●9	#8●15	#8●11	#10●11	#10●11	#10●8	#10●7	#10●6	#9●8-1/2‰	#9●8 ‰
Total ⓔ bars		Metric	6-#19	6-#19	10-#22	10-#22	10-#22	10-#22	6-#22	6-#22	6-#22	6-#22	4-#22	4-#22	4-#22	4-#22
		U.S.	6-#6	6-#6	10-#7	10-#7	10-#7	10-#7	6-#7	6-#7	6-#7	6-#7	4-#7	4-#7	4-#7	4-#7
Total ⓕ bars		Metric				4-#22	4-#22	4-#22	4-#22	4-#22	4-#22	4-#22	2-#22	2-#22	2-#22	2-#22
		U.S.				4-#7	4-#7	4-#7	4-#7	4-#7	4-#7	4-#7	2-#7	2-#7	2-#7	2-#7
2' Level surcharge	Toe Pressure	Metric	77Kpa	91Kpa	105Kpa	110Kpa	134Kpa	158Kpa	168Kpa	191Kpa	206Kpa	220Kpa	235Kpa	254Kpa	273Kpa	297Kpa
		U.S.	1.6k/sf	1.9k/sf	2.2k/sf	2.3k/sf	2.8k/sf	3.3k/sf	3.5k/sf	4.0k/sf	4.3k/sf	4.6k/sf	4.9k/sf	5.3k/sf	5.7k/sf	6.2k/sf
2:1 unlimited slope	Toe Pressure	Metric	53Kpa	72Kpa	96Kpa	120Kpa	129Kpa	158Kpa	172Kpa	201Kpa	225Kpa	263Kpa	282Kpa	311Kpa	340Kpa	359Kpa
		U.S.	1.1k/sf	1.5k/sf	2.0k/sf	2.5k/sf	2.7k/sf	3.3k/sf	3.6k/sf	4.2k/sf	4.7k/sf	5.5k/sf	5.9k/sf	6.5k/sf	7.1k/sf	7.5k/sf
1-1/2:1 limited slope	Toe Pressure	Metric	62Kpa	81Kpa	101Kpa	120Kpa	139Kpa	163Kpa	182Kpa	206Kpa	230Kpa	259Kpa	278Kpa	311Kpa	345Kpa	359Kpa
		U.S.	1.3k/sf	1.7k/sf	2.1k/sf	2.5k/sf	2.9k/sf	3.4k/sf	3.8k/sf	4.3k/sf	4.8k/sf	5.4k/sf	5.8k/sf	6.5k/sf	7.2k/sf	7.5k/sf
Spread Footing	Steel kg/ft.	Metric	7.7kg	9.1kg	12.7kg	16.8kg	23kg	36.3kg	47.6kg	66.7kg	84.8kg	112kg	137kg	185kg	204kg	230kg
	Steel lbs/ft.	U.S.	17lb.	20lb.	28lb.	37lb.	51lb.	80lb.	105lb.	147lb.	187lb.	246lb.	303lb.	407lb.	449lb.	507lb.
	Conc cu m	Metric	.26cu m	.36cu m	.47cu m	.58cu m	.72cu m	.88cu m	1.0cu m	1.2cu m	1.3cu m	1.5cu m	1.8cu m	2.9cu m	2.5cu m	3.0cu m
	Conc cf/ft	U.S.	8.9cu ft	12.5cu ft	16.3cu ft	20.2cu ft	25.4cu ft	30.1cu ft	34.6cu ft	40.1cu ft	45.0cu ft	52.1cu ft	63.3cu ft	77.0cu ft	88.1cu ft	104.8cu ft
Pile ftg.	Steel kg/ft.	Metric	13.2kg	14.5kg	18.6kg	31.8kg	38.1kg	51.3kg	63.5kg	78.0kg	96.2kg	122kg	146kg	194kg	213kg	240kg
	Steel lbs/ft.	U.S.	29lb.	32lb.	41lb.	70lb.	84lb.	113lb.	140lb.	172lb.	212lb.	270lb.	322lb.	427lb.	469lb.	528lb.
	Conc cu m	Metric	.30cu m	.34cu m	.48cu m	.59cu m	.72cu m	.86cu m	.99cu m	1.1cu m	1.3cu m	1.2cu m	1.8cu m	2.3cu m	2.6cu m	3.0cu m
	Conc cf/ft	U.S.	10.2cu ft	12.7cu ft	16.7cu ft	20.6cu ft	25.2cu ft	30.1cu ft	34.8cu ft	40.6cu ft	45.7cu ft	53.1cu ft	64.7cu ft	78.6cu ft	89.9cu ft	107.0cu ft

Note: Reinforcement detailed is to be placed in addition to that shown for spread footing. All piles not shown, see Pile Layout on plans.
For pile footing Design H=4' use same footing dimensions as Design H=6'

‰ Denotes a bundle of 2 bars

Revision	By	Approved	Date
ORIGINAL		Kercheval	12/75
Add Metric	T. Stanton		03/03

SAN DIEGO REGIONAL STANDARD DRAWING

REINFORCED CONCRETE RETAINING WALL

TYPE 1

RECOMMENDED BY THE SAN DIEGO REGIONAL STANDARDS COMMITTEE

Chairperson R.C.E. 19246 Date 3/10/2003

DRAWING NUMBER C-11D

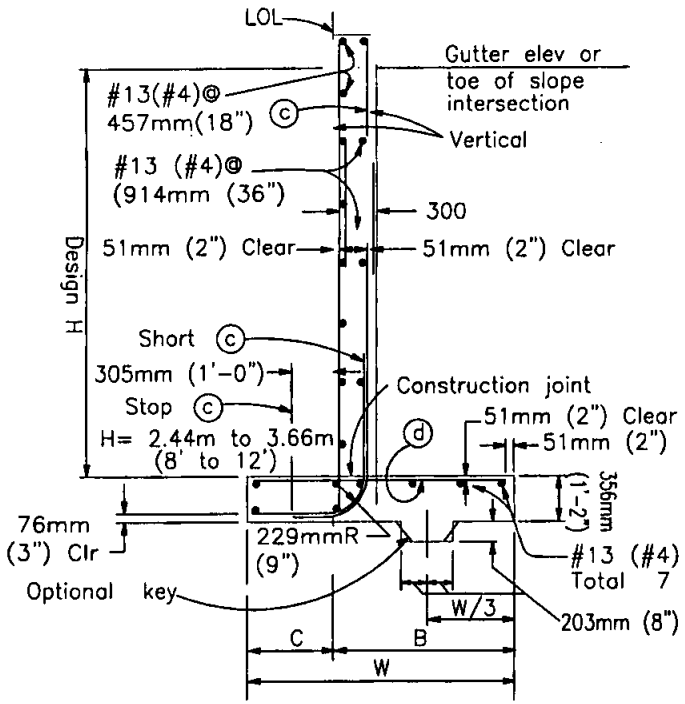

SPREAD FOOTING SECTION

Place concrete in toe against undisturbed material, except as permitted by the Engineer.

NOTES:
Design H may be exceeded by 152mm (6") before going to the next size. Footing key is required except when found unnecessary by Engineer.
Special footing design is required where foundation material is incapable of supporting toe pressure loads listed in table.

Design Data:
fc = 8.96 Mpa (1300 psi) f'c=22.4 Mpa (3250 psi) fs=165 Mpa (24,000 psi) n= 10 earth 5.75 Kpa (120 pcf)

Case I – Equivalent fluid pressure= 1.7 Kpa (36 psf) max for determination of toe pressure. 1.3 Kpa (27) psf min for determination of heel pressure.

Case II – Earth pressure determined from Rankine's formula with 0 = 33°-12.8m (42').

NOTE:
Reinforcement detailed is to be placed in addition to that shown for spread footing.
All piles not shown. see Pile Layout on plans.

* For pile footing Design H=1.22m (4') use same footing dimensions as Design H=1.83m (6').

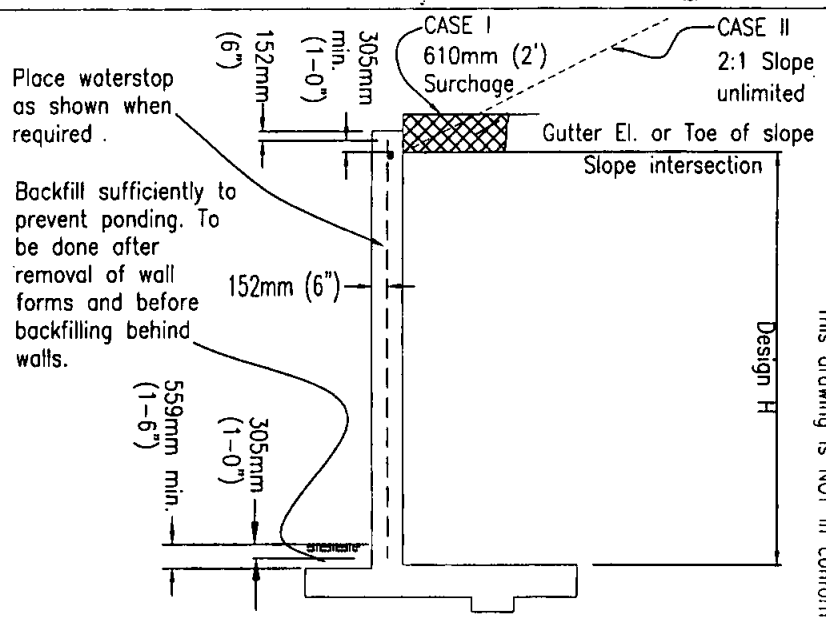

DESIGN

For drainage notes and other details, see "Retaining Wall Details No.1" Drawing C-13

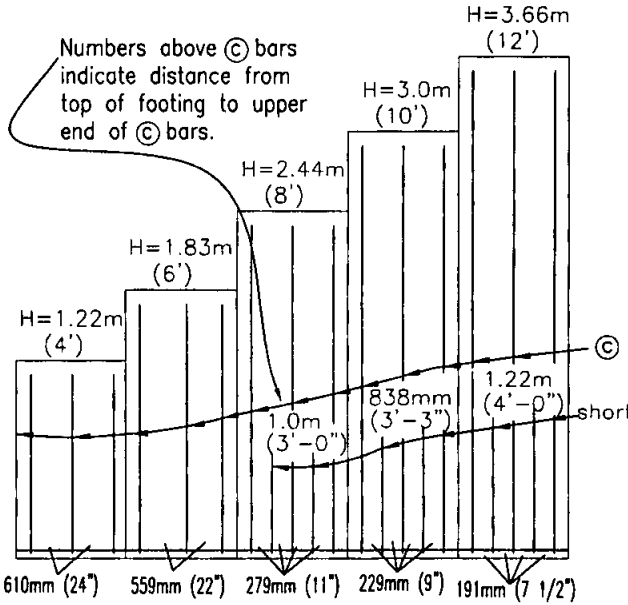

ELEVATION

This drawing is NOT in conformance with latest UBC and should be used with care and judgment.

Revision	By	Approved	Date
ORIGINAL		Kercheval	12/75
Add Metric		T. Stanton	03/03

SAN DIEGO REGIONAL STANDARD DRAWING

REINFORCED CONCRETE RETAINING WALL

TYPE 1A

RECOMMENDED BY THE SAN DIEGO REGIONAL STANDARDS COMMITTEE

Chairperson R.C.E. 19246 Date 3/10/2003

DRAWING NUMBER C-12A

Revision	By	Approved	Date
ORIGINAL		Kercheval	12/75
Add Metric		T. Stanton	03/03

This drawing is NOT in conformance with latest UBC and should be used with care and judgment.

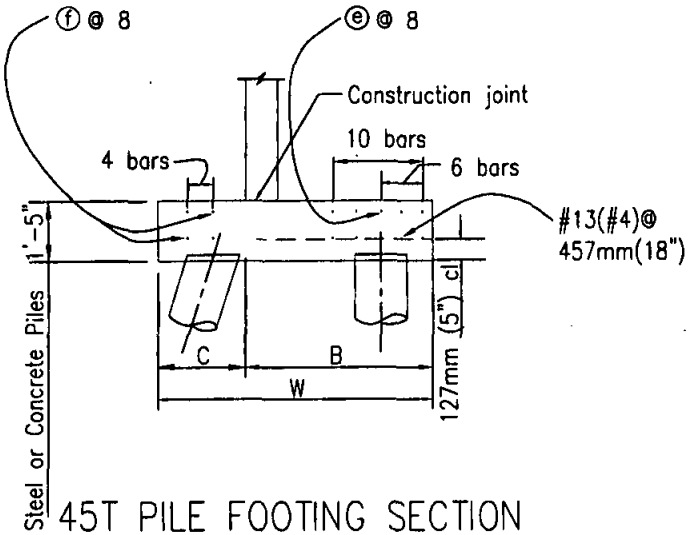

45T PILE FOOTING SECTION

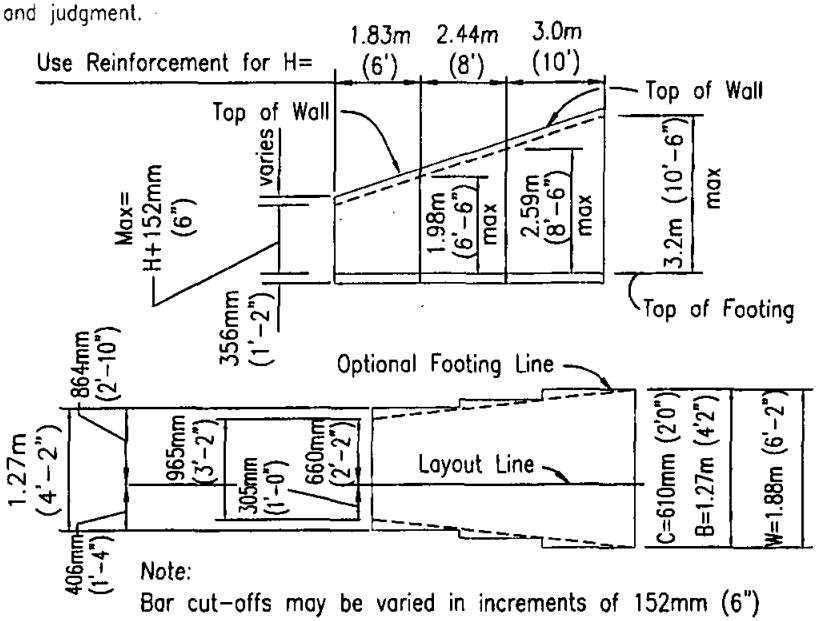

Note:
Bar cut-offs may be varied in increments of 152mm (6")

TYPICAL LAYOUT EXAMPLE

For joints required, see Details 3-3 and 3-4, Std Dwg C-15

TABLE OF REINFORCING STEEL DIMENSIONS AND DATA

Design H		®1.22m (4')	1.83m (6')	2.44m (8')	3.0m (10')	3.66m (12')
W		965mm (3'-2")	1.27m (4'-2")	1.57m (5'-2")	1.88m (6'-2")	2.18m (7'-2")
C		305mm (1'-0")	406mm (1'-4")	508mm (1'-8")	610mm (2'-0")	711mm (2'-4")
B		356mm (1'-2")	864mm (2'-10")	1.07m (3'-6")	1.27m (4'-2")	1.47m (4'-10")
ⓒ bars		#16(#5)@610mm(24")	#16(#5)@559mm(22")	#16 (#5)@279mm (11")	#19(#6)@229mm(9")	#22(#7)@191mm(7-1/2")
ⓓ bars		#16(#5)@610mm(24")	#16(#5)@559mm(22")	#16 (#5)@559mm (22")	#22(#7)@457mm(18")	#25 (#8)@15
Total ⓔ bars		6-#19 (#6)	6-#19 (#6)	6-#19 (#6)	10-#22 (#7)	10-#22 (#7)
Total ⓕ bars					4-#22 (#7)	4-#22 (#7)
Case I - Toe Press.		76.1 kg/m² (1590psf)	92.4kg/m² (1930psf)	107kg/m² (2240psf)	122kg/m² (2550psf)	136kg/m² (2840psf)
Case II - Toe Press.		50.8 kg/m² (1060psf)	69.9kg/m² (1460psf)	89.1kg/m² (1860psf)	109kg/m² (2280psf)	129kg/m² (2700psf)
Spread Footing	Steel lbs/ft	6.8kg (15lb)	9.52kg (21lb)	12.25kg (27lb)	21.3kg (46lb)	31.8kg (70lb)
	Conc CF/ft	3.9kg (8.6lb)	5.35kg (11.8lb)	6.76kg (14.9lb)	8.21kg (18.1lb)	9.66kg (21.3lb)
Pile Ftg	Steel lbs/ft	11.3kg (25lb)	14.51kg (32lb)	17.24kg (38lb)	34.0kg (75lb)	45.8kg (101lb)
	Conc CF/ft	4.5kg (9.9lb)	5.40kg (11.9lb)	6.94kg (15.3lb)	8.53kg (18.8lb)	10.1kg (22.2lb)

Note
Quantities apply to Design H portion and exclude the added portion above "Cutter Elevation".

SAN DIEGO REGIONAL STANDARD DRAWING

REINFORCED CONCRETE RETAINING WALL
TYPE 1A

RECOMMENDED BY THE SAN DIEGO REGIONAL STANDARDS COMMITTEE

Chairperson R.C.E. 19246 Date 3/10/2003

DRAWING NUMBER C-12B

This drawing is NOT in conformance with latest UBC and should be used with care and judgment.

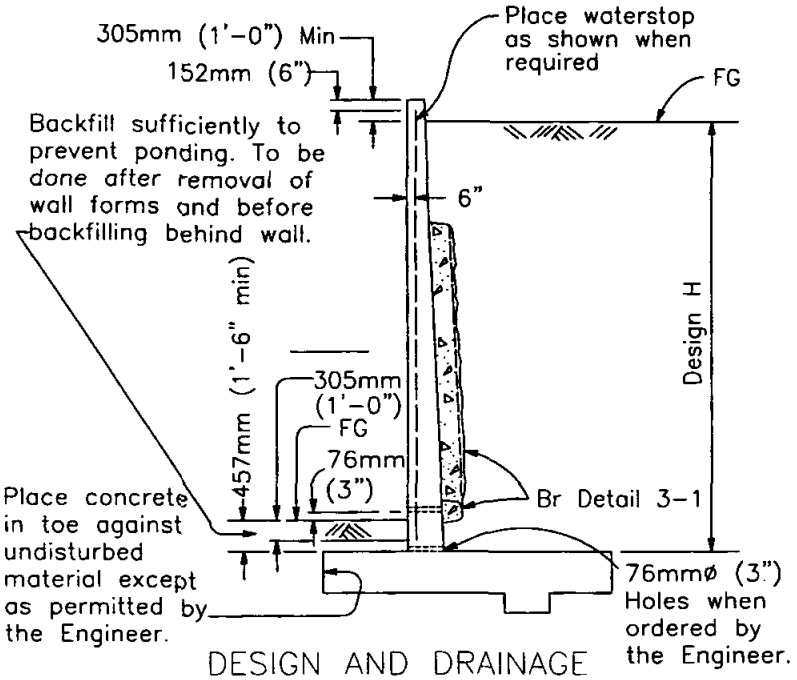

DESIGN AND DRAINAGE

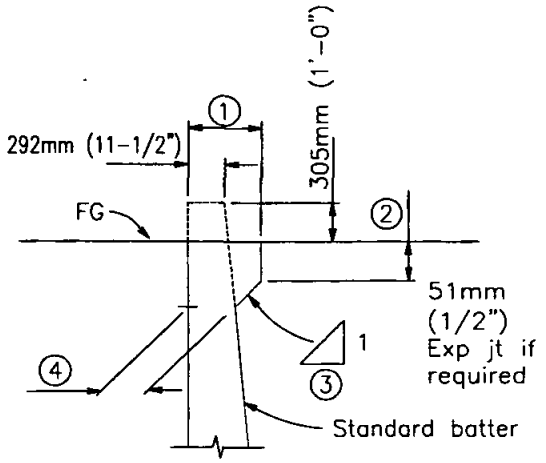

Dimensions ①, ② and ③ to be as shown elsewhere in the Project Plans.

④ Stem width at base of haunch to be determined as shown.

STEM WIDTH AT BASE OF HAUNCH

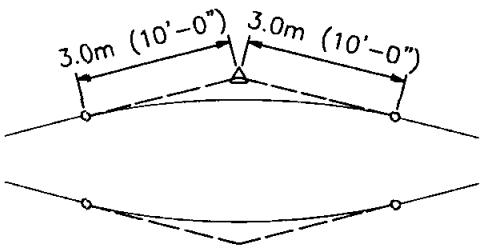

6.1m (20') VC AT TOP OF WALL SLOPE CHANGE

Where shown on the plans

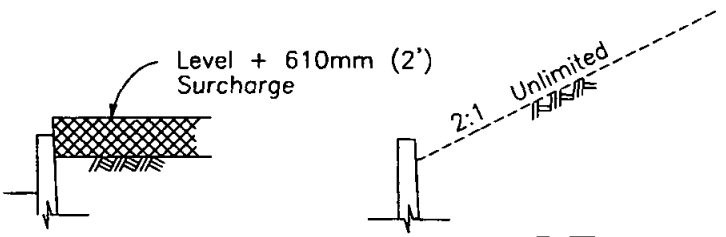

CASE I

CASE II

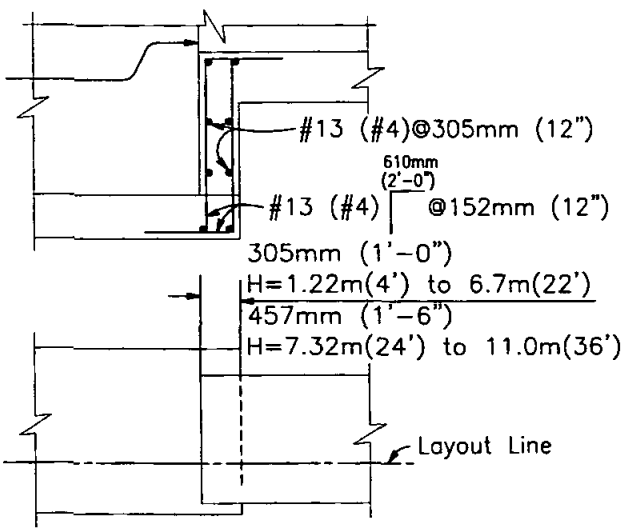

FOOTING STEP

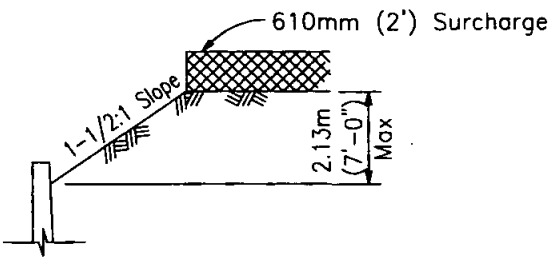

CASE III

DETAIL OF DESIGN LOADING CASES

CASE I	Level + 610mm (2') Surcharge
CASE II	2:1 Unlimited Slope
CASE III	1-1/2:1 Limited Slope (2.13m (7'-0") Max height) + 610mm (2') Surcharge

NOTE: Surcharge Limits Shown Apply To Retaining Walls Type 1 and 3.

Revision	By	Approved	Date
ORIGINAL		Kercheval	12/75
Add Metric		T. Stanton	03/03

SAN DIEGO REGIONAL STANDARD DRAWING

REINFORCED CONCRETE RETAINING WALL DETAILS No. 1

RECOMMENDED BY THE SAN DIEGO REGIONAL STANDARDS COMMITTEE

T. Stanton 3/10/2003

Chairperson R.C.E. 19246 Date

DRAWING NUMBER C-13A

This drawing is NOT in conformance with latest UBC and should be used with care and judgment.

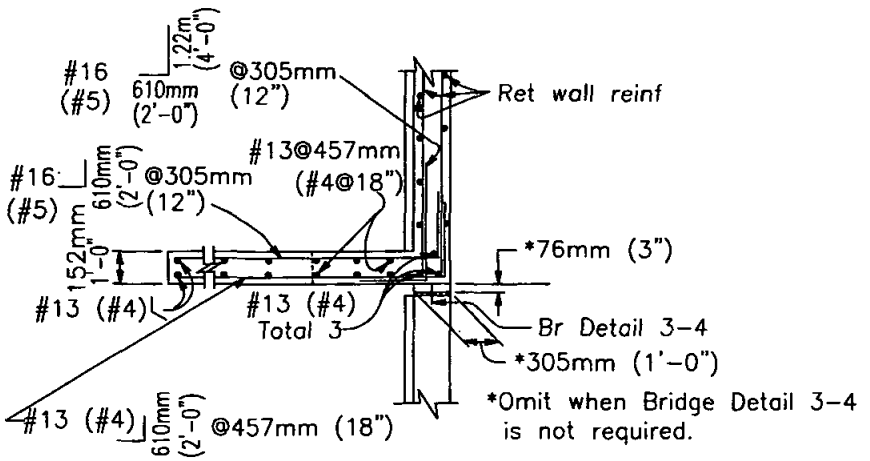

PLAN
(For return wall Type "A")

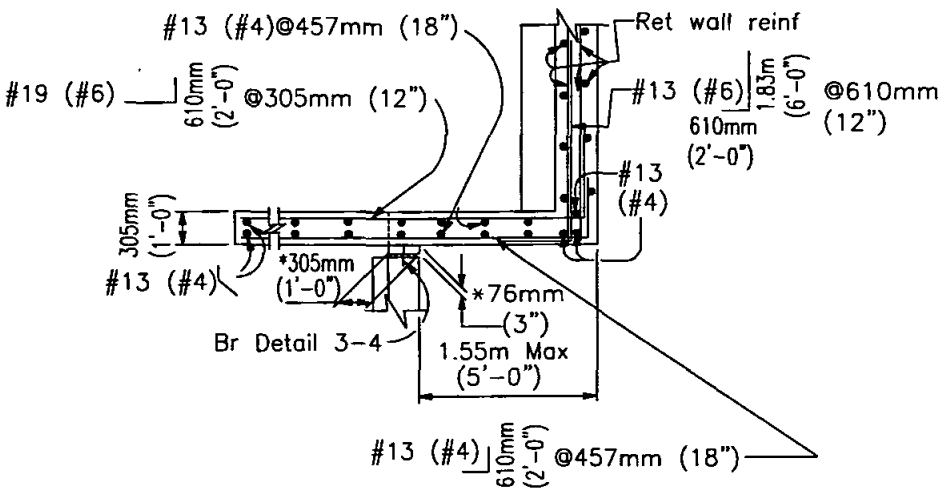

PLAN
(For return wall Type "B")

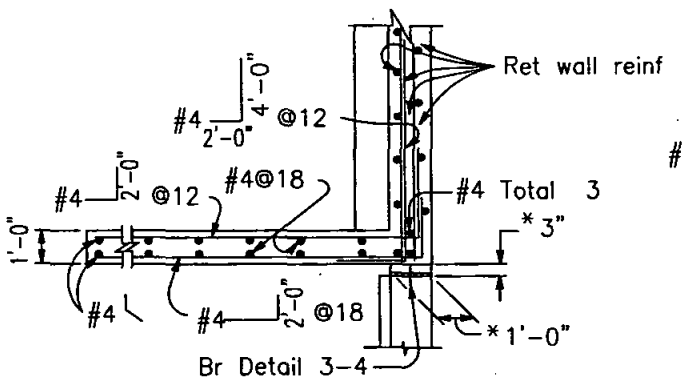

* Omit when Bridge Detail 3-4 is not required.

PLAN
(For return wall Type "C")

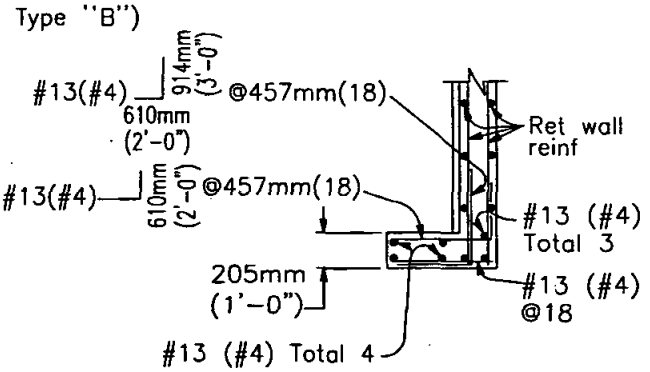

PLAN
(For return wall Type "D")

Revision	By	Approved	Date
ORIGINAL		Kercheval	12/75
Add Metric		T. Stanton	03/03

SAN DIEGO REGIONAL STANDARD DRAWING

REINFORCED CONCRETE
RETAINING WALL DETAILS No. 1

RECOMMENDED BY THE SAN DIEGO REGIONAL STANDARDS COMMITTEE

T. Stanton 3/10/2003

Chairperson R.C.E. 19246 Date

DRAWING NUMBER C-13B

This drawing is NOT in conformance with latest UBC and should be used with care and judgment.

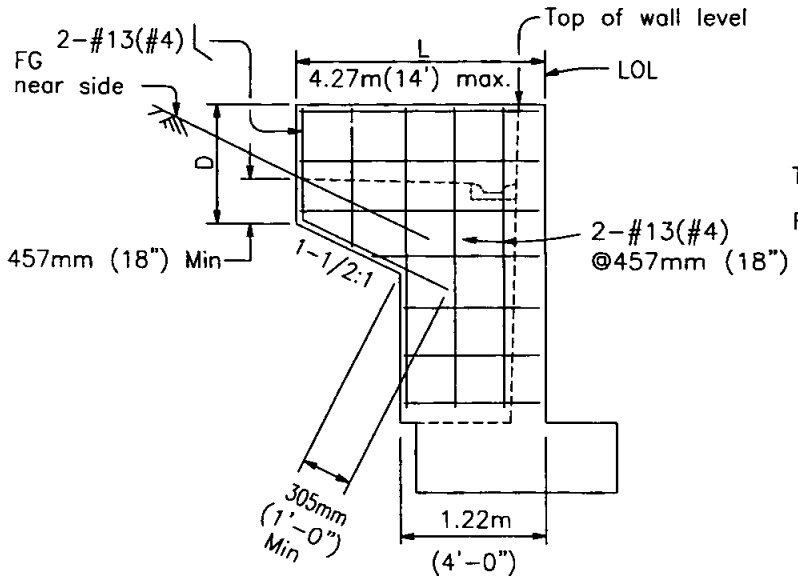

ELEVATION

RETURN WALL TYPE "A"

Use where H=2.44m (8') or less

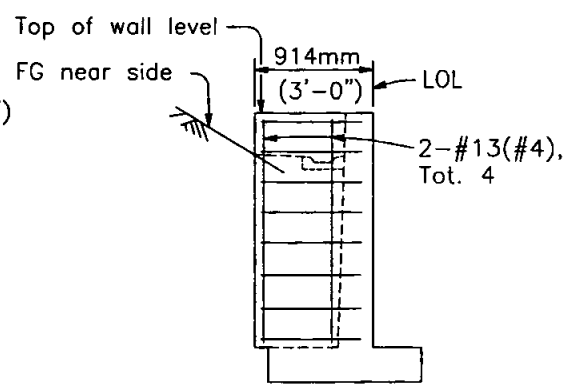

ELEVATION

RETURN WALL TYPE "D"

Use where H=1.83m (6') or less

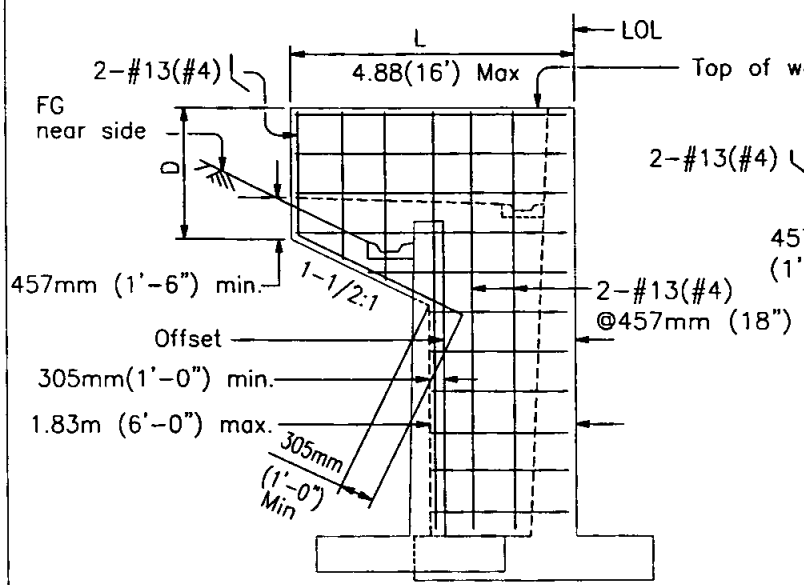

ELEVATION

RETURN WALL TYPE "B"

Use where H=3.0m (10') or more on offset walls

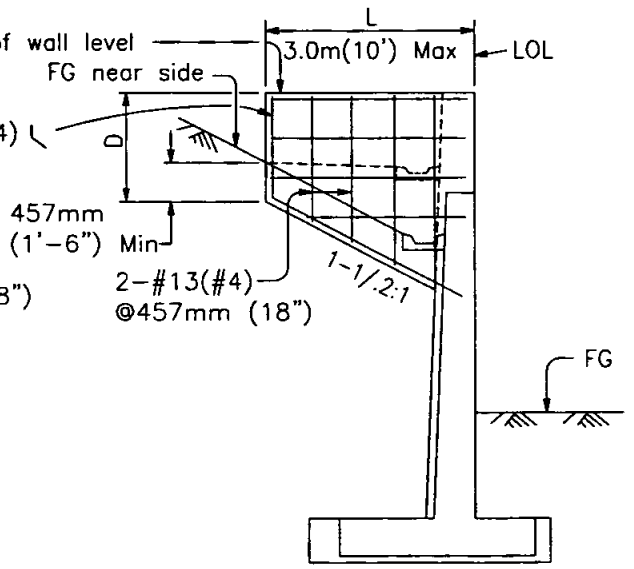

ELEVATION

RETURN WALL TYPE "C"

Use where H=3.9m (10')
more on straight walls

Revision	By	Approved	Date
ORIGINAL		Kercheval	12/75
Add Metric		T. Stanton	03/03

SAN DIEGO REGIONAL STANDARD DRAWING

REINFORCED CONCRETE
RETAINING WALL DETAILS No. 1

RECOMMENDED BY THE SAN DIEGO REGIONAL STANDARDS COMMITTEE

T. Stanton 3/10/2003

Chairperson R.C.E. 19246 Date

DRAWING NUMBER C-13C

This drawing is NOT in conformance with latest UBC and should be used with care and judgment.

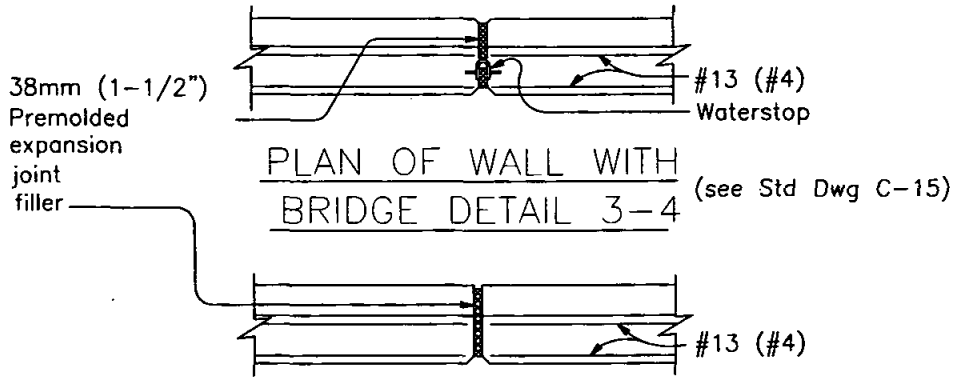

PLAN OF WALL WITH BRIDGE DETAIL 3-4 (see Std Dwg C-15)

PLAN OF WALL WITH EXPANSION JOINT ONLY

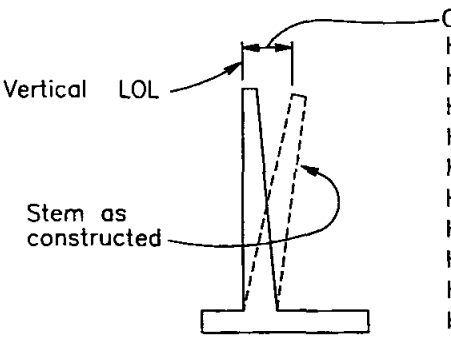

Offset as follows:
H 1.22m(4')=6.35mm(1/4")
H 1.88m(6')=9.53mm(3/8")
H 2.44m(8')=13mm(1/2")
H 3.0 m(10')=16mm(5/8")
H 3.66m(12')=19mm(3/4")
H 4.27m(14')=25.4mm(1")
H 4.88m(16')=32mm(1-1/4")
H 5.49m(18')=38mm(1-1/2")
H 6.10m(20')=44.5mm(1-3/4")
H 6.71m(22')=51mm(2")
H 7.32m(24')=57mm(2-1/4")
H 7.93m(26) thru 10.97m (36')=63.5mm(2-1/2")

APPROX. WALL OFFSET VALUES

Not required for wall Types 3 and 4.
Values for offsetting forms to be determined by the Engineer.

NOTES

Design Conditions:

Design H may be exceeded by 152mm (6") before going to the next size. Special footing design is required where foundation material is incapable of supporting toe pressure listed in table.
Return wall not required unless shown elsewhere.

Design Data:

fc = 8.96Mpa (1300 psi) f'c = 22.4Mpa (3250) psi fs = 166Mpa (24,000 psi)
n = 10 earth = 1922 kg/cu m (120 pcf)
610mm (2') Surcharge:
Equivalent fluid pressure =
36 pcf maximum for determination of toe pressure.
27 pcf minimum for determination of heel pressure.

Earth pressures for 2:1 unlimited slope, 1-1/2:1 slope, and 1-1/2:1 unlimited slope, determined from Rankine's formula with ø=33°-12.8m(42').

Revision	By	Approved	Date
ORIGINAL		Kercheval	12/75
Add Metric		T. Stanton	03/03

SAN DIEGO REGIONAL STANDARD DRAWING

REINFORCED CONCRETE RETAINING WALL DETAILS No. 1

RECOMMENDED BY THE SAN DIEGO REGIONAL STANDARDS COMMITTEE

T. Stanton 3/10/2003

Chairperson R.C.E. 19246 Date

DRAWING NUMBER C-13D

This drawing is NOT in conformance with latest UBC and should be used with care and judgment.

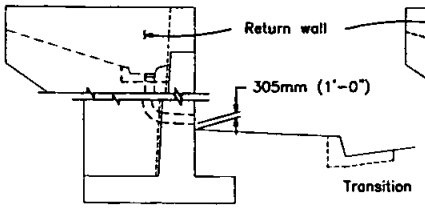

RETAINING WALL, FACE OF WALL OUTLET

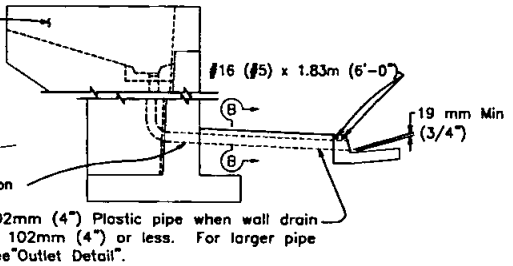

RETAINING WALL, GUTTER OUTLET

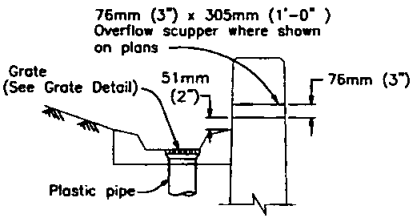

WALL DRAIN DETAIL

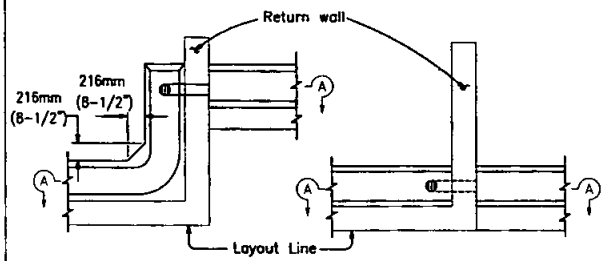

PLAN-OFFSET WALL PLAN-CONTINUOUS WALL

DRAIN THROUGH RETURN WALL

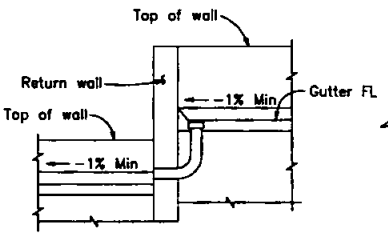

SECTION A-A

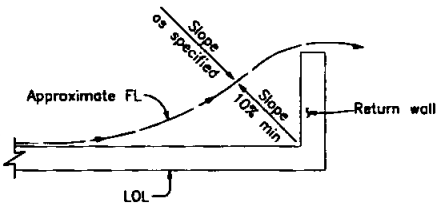

WALL DRAINAGE WHERE GUTTER NOT REQUIRED

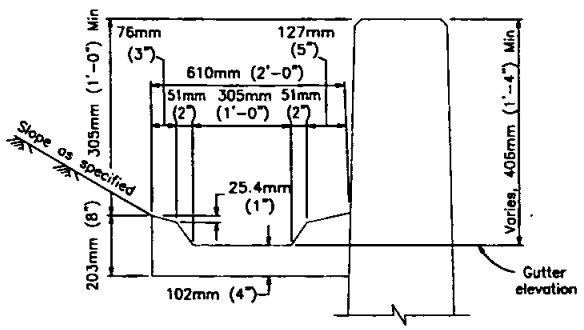

TYPICAL GUTTER DETAIL

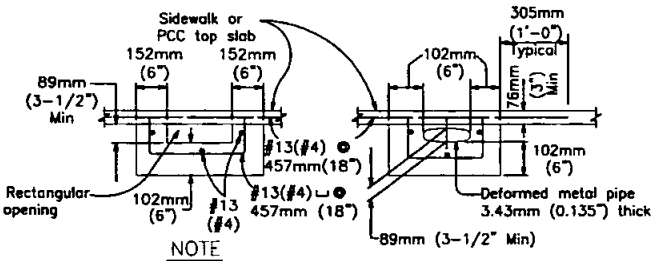

NOTE

Area of opening to be not less than that of pipe from wall gutter. Make opening transition in wall. Edge opening in curb face to 19mm (3/4") minimum radius.

OUTLET DETAIL - SECTION B-B

GRATE DETAIL

Sizes to fit standard hubs

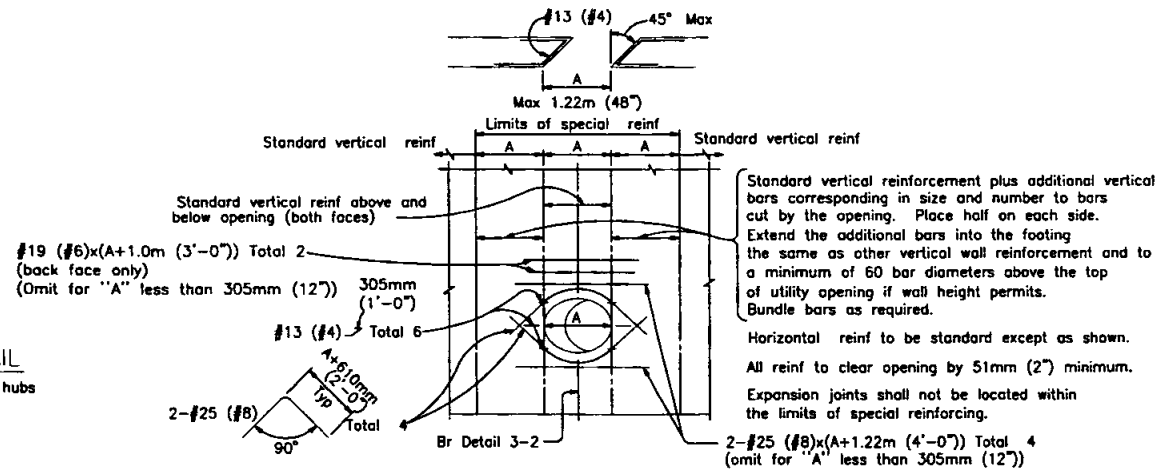

RETAINING WALL UTILITY OPENING

Max size of opening (A) = 1.22m (48") To be used in conjunction with Standard Drawing C-13.

Revision	By	Approved	Date
ORIGINAL		Kercheval	12/75
Add Metric		T. Stanton	03/03

SAN DIEGO REGIONAL STANDARD DRAWING

REINFORCED CONCRETE RETAINING WALL DETAILS No. 2

RECOMMENDED BY THE SAN DIEGO REGIONAL STANDARDS COMMITTEE

T. Stanton 3/10/2003

Chairperson R.C.E. 19246 Date

DRAWING NUMBER C-14

This drawing is NOT in conformance with latest UBC and should be used with care and judgment.

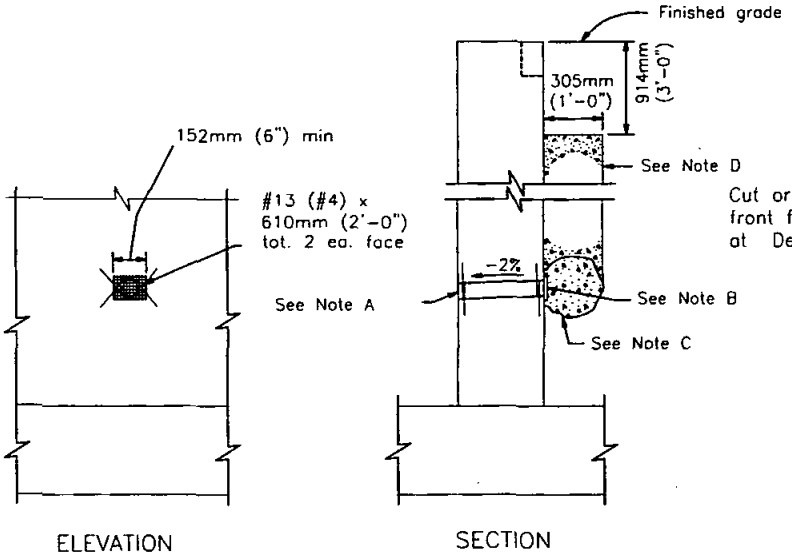

WEEP HOLE AND PERVIOUS BACKFILL
DETAIL 3-1

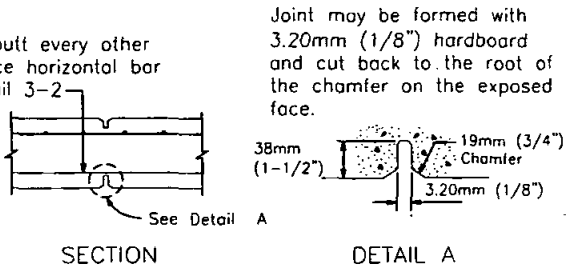

WEAKENED PLANES
DETAIL 3-2

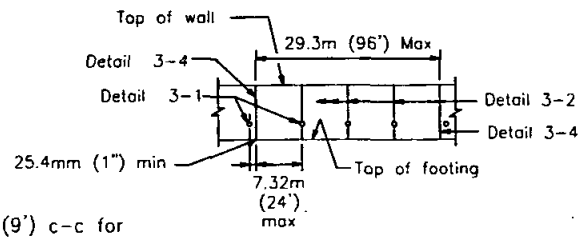

WALL EXPANSION JOINTS
AND WEAKENED PLANES
DETAIL 3-3

NOTES

A. 102mm (4") diameter drain @ 7.62m (25') max. center to center (2.74m (9') c-c for Type 3 and 2.82m (9'-3") c-c for Type 4 Retaining Walls). For walls adjacent to sidewalks or curbs, provide 102mm (4") cast iron or asbestos cement pipe under the sidewalk to discharge thru curb face. Exposed wall drains shall be located 76mm (3") ± above finished grade.

B. 152mm (6") square aluminum or galvanized steel wire 4 mesh hardware cloth.(Min wire diameter .762mm (0.03")) Anchor firmly to backface.

C. .028 Cubic Meter (One cubic foot) pervious backfill material in a burlap sack, securely tied.

D. Pervious backfill material continuous behind retaining wall.

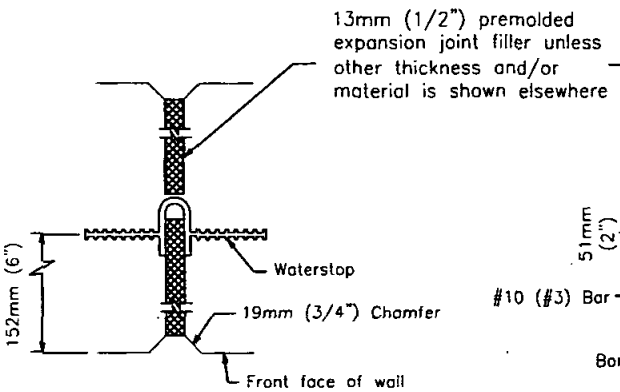

WALL EXPANSION JOINT
DETAIL 3-4

Waterstop to have 5 or more pairs of raised ribs to provide 64.5 sq mm (0.1 sq in) min. rib cross-section area on each half of the water stop. Height of ribs to be 2.38mm (3/32") min.

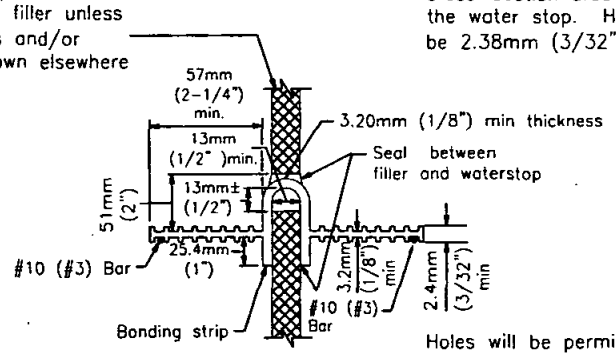

WATERSTOP
DETAIL 3-6

Holes will be permitted in the outer 13mm (1/2") of the web for wire, rings etc. Tie web to #10 (#3) reinforcing bars @ 305mm (12") max intervals to support the waterstop *in proper position during concrete placement.* Alternative detail may be submitted for approval of the engineer.

Revision	By	Approved	Date
ORIGINAL		Kercheval	12/75
Add Metric		T. Stanton	03/03

SAN DIEGO REGIONAL STANDARD DRAWING

REINFORCED CONCRETE
RETAINING WALL DETAILS No. 3

RECOMMENDED BY THE SAN DIEGO REGIONAL STANDARDS COMMITTEE

T. Stanton 3/10/2003

Chairperson R.C.E. 19246 Date

DRAWING NUMBER C-15

DRAINAGE SYSTEMS

This drawing is NOT in conformance with latest UBC and should be used with care and judgment.

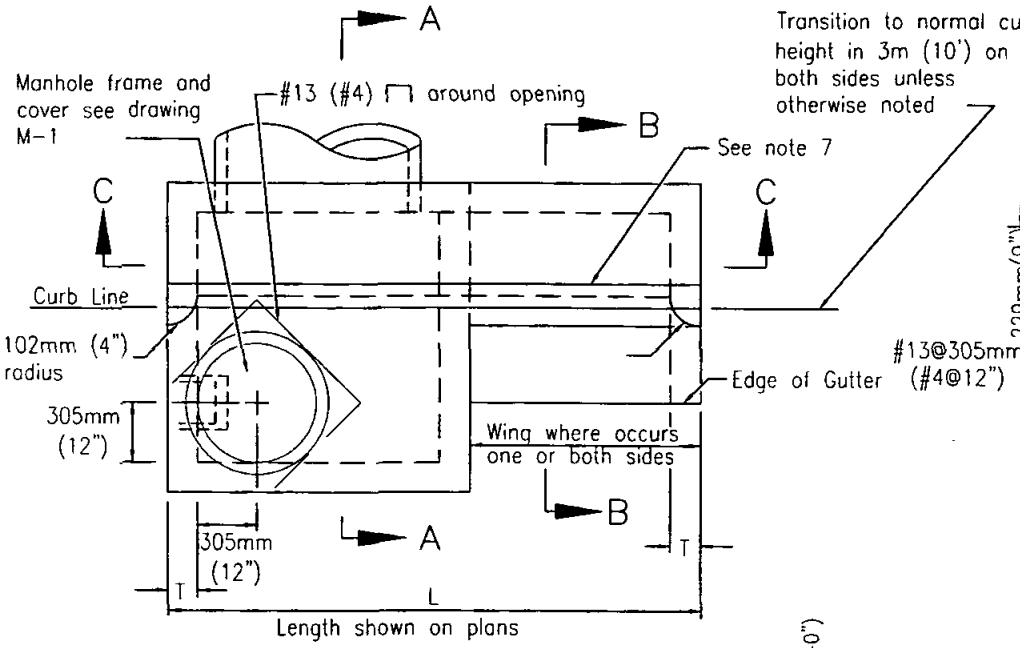

PLAN

Transition to normal curb height in 3m (10') on both sides unless otherwise noted

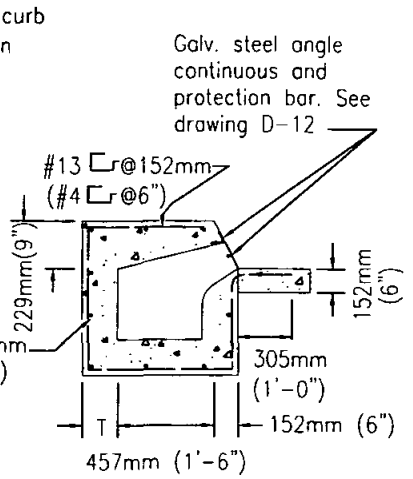

SECTION B-B

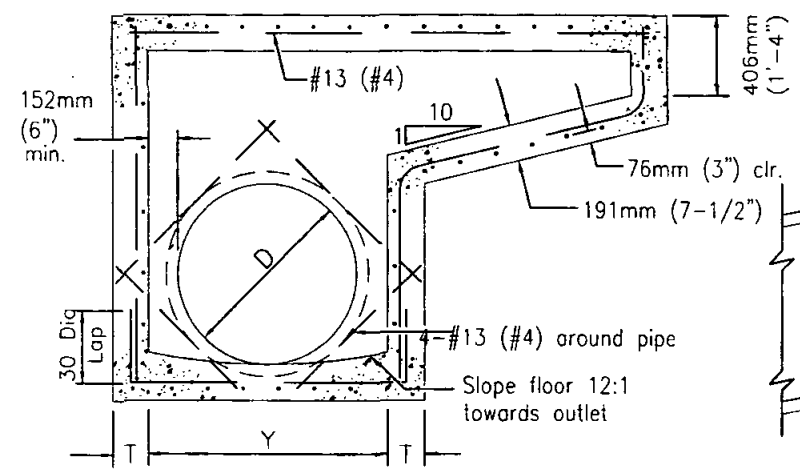

Determined by pipe size-1.22m (4') min., 2.44m (8')max.

SECTION C-C

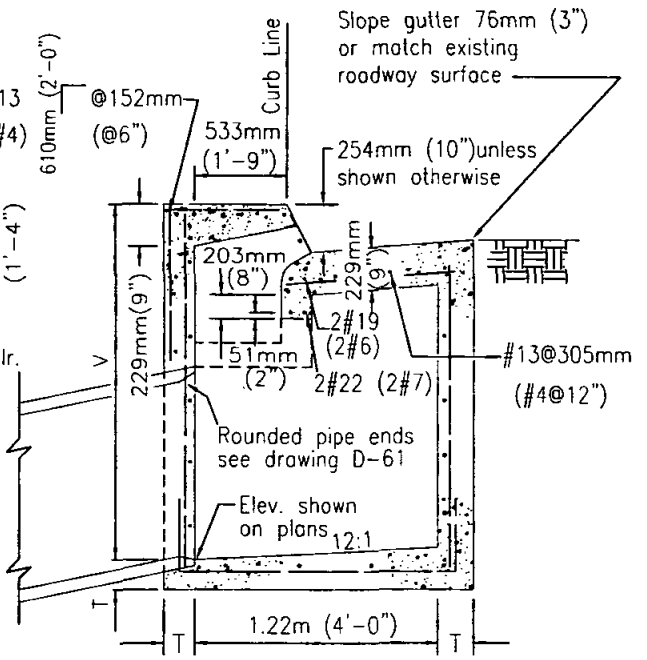

SECTION A-A

NOTES

1. See Standard Drawings D-11 & D-12 for additional notes and details.
2. Types are designated as follows: (no wing)A, (one wing)A-1, (two wings)A-2.
3. Exposed edges of concrete shall be rounded with a radius of 13mm (1/2").
4. When V exceeds 4' steps shall be installed. See Standard Drawing D-11 for details.
5. Concrete gutter to match adjacent gutters.
6. An expansion joint shall be placed at the ends of the inlet where the curb is to adjoin.
7. Provide 6.35mm (1/4") tooled groove in top slab in line with back of adjacent curb.
8. Surface of top slab shall be sidewalk finished to drain toward street at a slope of 6.35mm (1/4") per foot.
9. Maintain 38mm (1-1/2") clear spacing between reinforcing and surface unless otherwise noted.

LEGEND ON PLANS

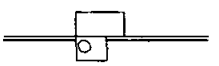

Revision	By	Approved	Date
ORIGINAL		Kercheval	12/75
Add Metric		T. Stanton	03/03

SAN DIEGO REGIONAL STANDARD DRAWING

CURB INLET - TYPE A

RECOMMENDED BY THE SAN DIEGO REGIONAL STANDARDS COMMITTEE

T. Stanton 3/10/2003

Chairperson R.C.E. 19246 Date

DRAWING NUMBER D-1

This drawing is NOT in conformance with latest UBC and should be used with care and judgment.

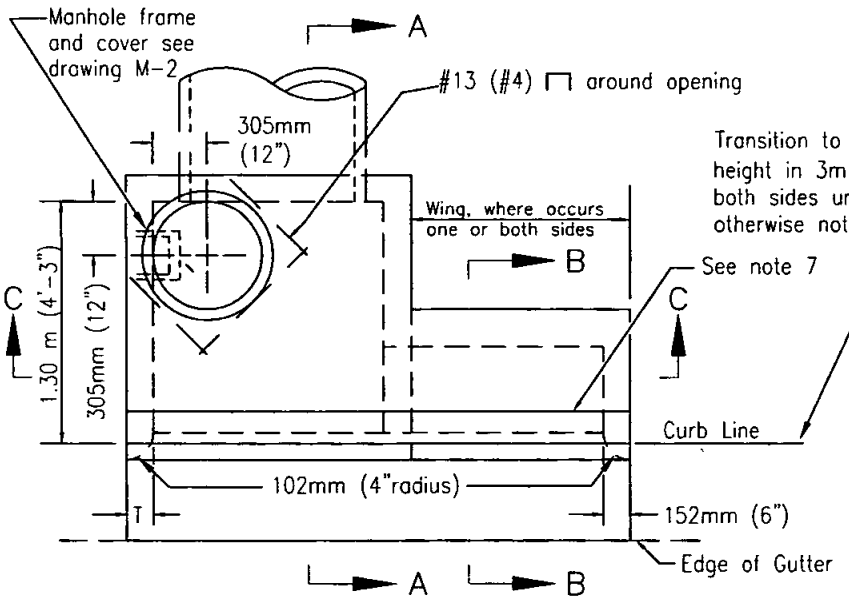

PLAN

Transition to normal curb height in 3m (10') on both sides unless otherwise noted

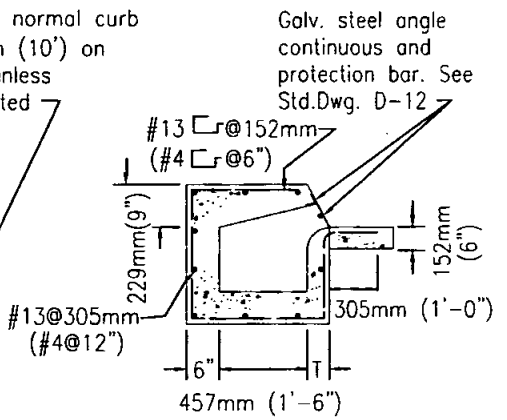

SECTION B-B

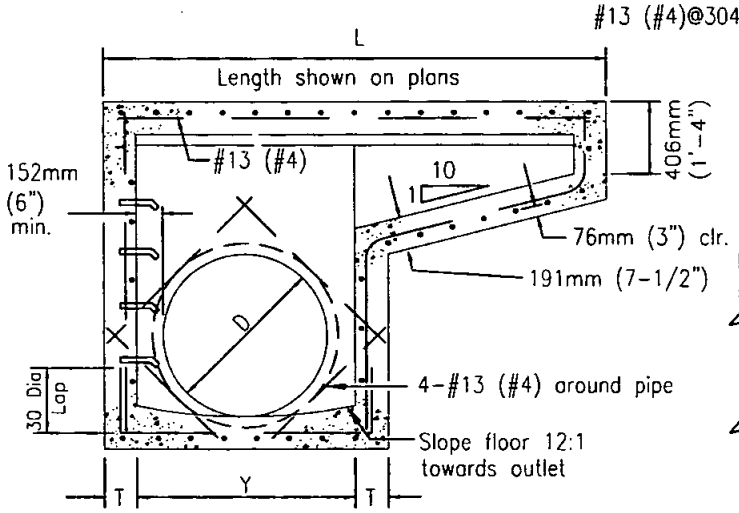

Determined by pipe size-1.22m (4') min., 2.44m (8')max.

SECTION C-C

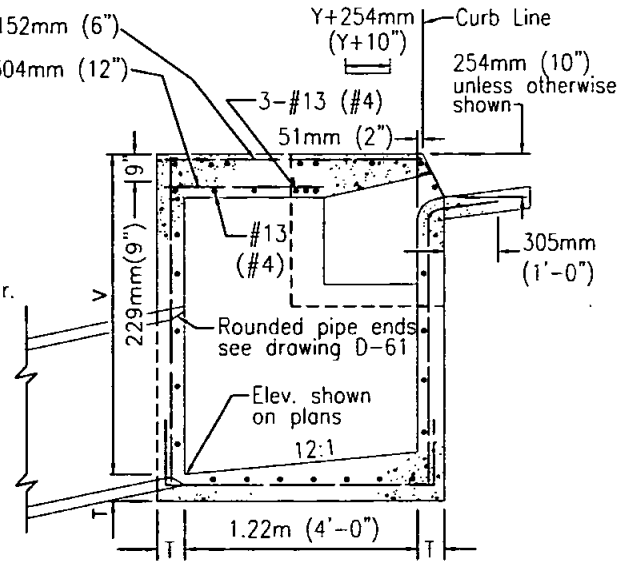

SECTION A-A

NOTES

1. See Standard Drawings D-11 & D-12 for additional notes and details.
2. Types are designated as follows: (no wing)B, (one wing)B-1, (two wings)B-2.
3. Maintain 38mm (1-1/2") clear spacing between reinforcing and surface unless otherwise noted.
4. When V exceeds 4' steps shall be installed. See Standard Drawing D-11 for details.
5. Concrete gutter to match adjacent gutters.
6. An expansion joint shall be placed at the ends of the inlet where the curb is to adjoin.
7. Provide 6.35mm (1/4") tooled groove in top slab in line with back of adjacent curb.
8. Surface of top slab shall be sidewalk finished to drain toward street at a slope of 6.35mm (1/4") per foot.
9. Maintain 38mm (1-1/2") clear spacing between reinforcing and surface unless otherwise noted.

LEGEND ON PLANS

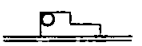

Revision	By	Approved	Date
ORIGINAL		Kercheval	12/75
Add Metric		T. Stanton	03/03

SAN DIEGO REGIONAL STANDARD DRAWING

CURB INLET - TYPE B

RECOMMENDED BY THE SAN DIEGO REGIONAL STANDARDS COMMITTEE

T. Stanton 3/01/2003

Chairperson R.C.E. 19246 Date

DRAWING NUMBER D-2

This drawing is NOT in conformance with latest UBC and should be used with care and judgment.

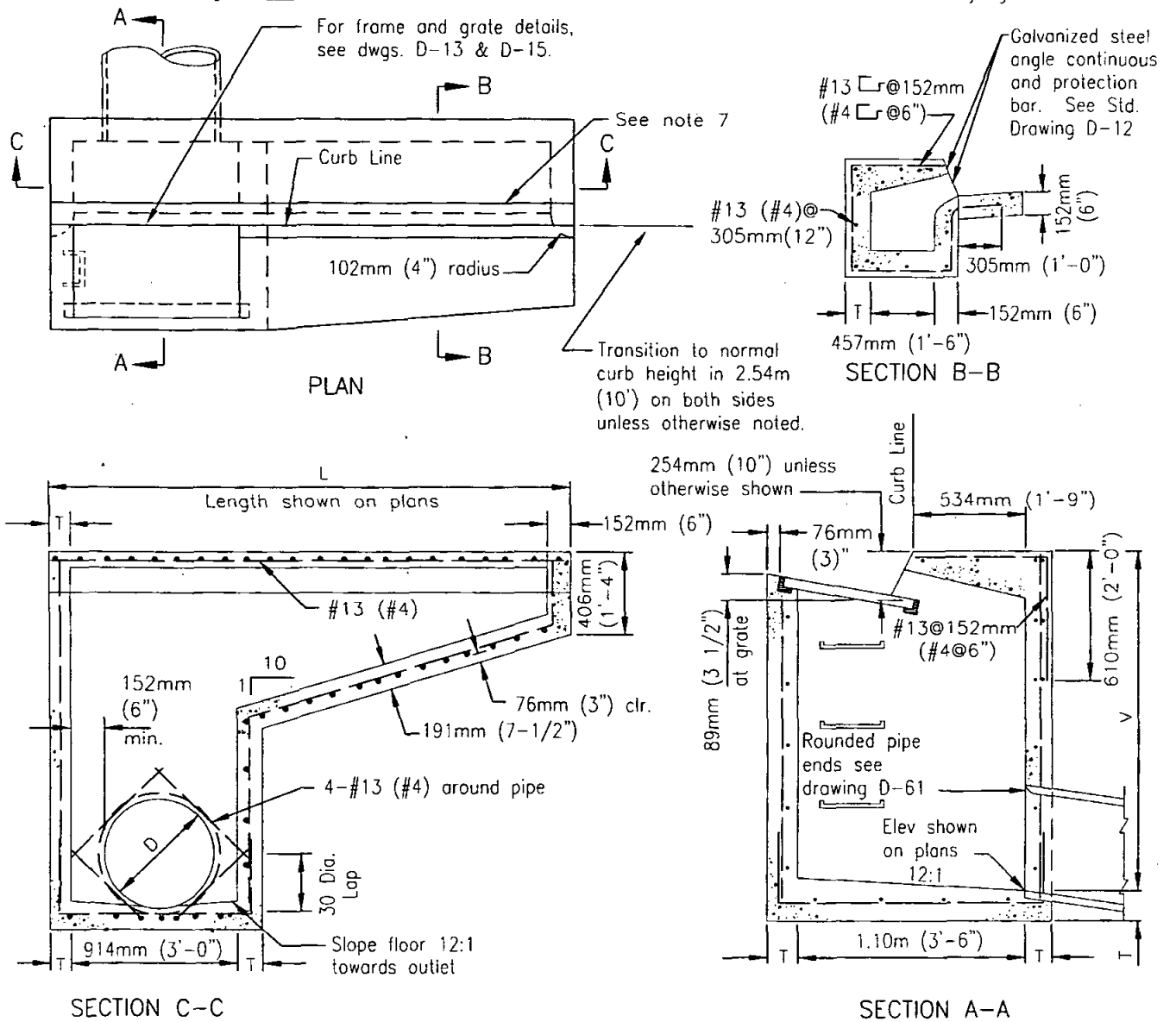

NOTES

1. See Standard Drawings D-11 through D-15 for additional notes and details.
2. Types are designated as follows: (no wing) C, (one wing) C-1, (two wings) C-2.
3. Exposed edges of concrete shall be rounded with a radius of 13mm (1/2").
4. When V exceeds 1.22m (4') steps shall be installed. See Standard Drawing D-11 for details.
5. Concrete gutter to match adjacent gutters.
6. An expansion joint shall be placed at the ends of the inlet where the curb is to adjoin.
7. Provide 6.35mm (1/4") tooled groove in top slab in line with back of adjacent curb.
8. Surface of top slab shall be sidewalk finished to drain toward street at a slope of 6.35mm (1/4") per foot.
9. Maintain 38mm (1-1/2") clear spacing between reinforcing and surface unless otherwise noted.
10. Where inlet is to be constructed on grade and Standard Drawing D-20 concrete apron is required, lift down-grade end of grate as shown on D-20.

LEGEND ON PLANS

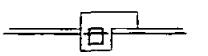

Revision	By	Approved	Date
ORIGINAL		Kercheval	12/75
Add Metric		T. Stanton	03/03

SAN DIEGO REGIONAL STANDARD DRAWING

CURB INLET - TYPE C

RECOMMENDED BY THE SAN DIEGO REGIONAL STANDARDS COMMITTEE

T. Stanton 3/10/2003

Chairperson R.C.E. 19246 Date

DRAWING NUMBER D-3

This drawing is NOT in conformance with latest UBC and should be used with care and judgment.

DIMENSIONS

T=203mm (8") if V is less than 2.44m (8').
T=254mm (10") if V is 2.44m (8') or more.
V=1.52m (5') unless otherwise specified.
V=D + 813mm (32") minimum.
W=2.13m (7') unless otherwise specified.
Y=1.52m (5') unless otherwise specified.
Width of driveway, W, shall be 3m (10') unless otherwise specified.
Elevation of point N shall be 330mm (13") below point H unless otherwise specified.

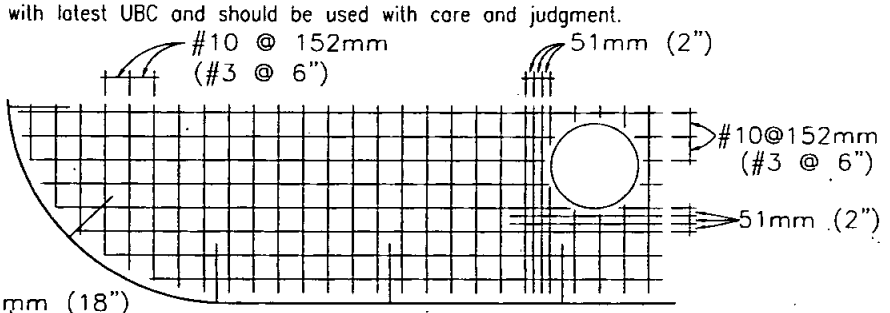

TOP SLAB REINFORCING PLAN

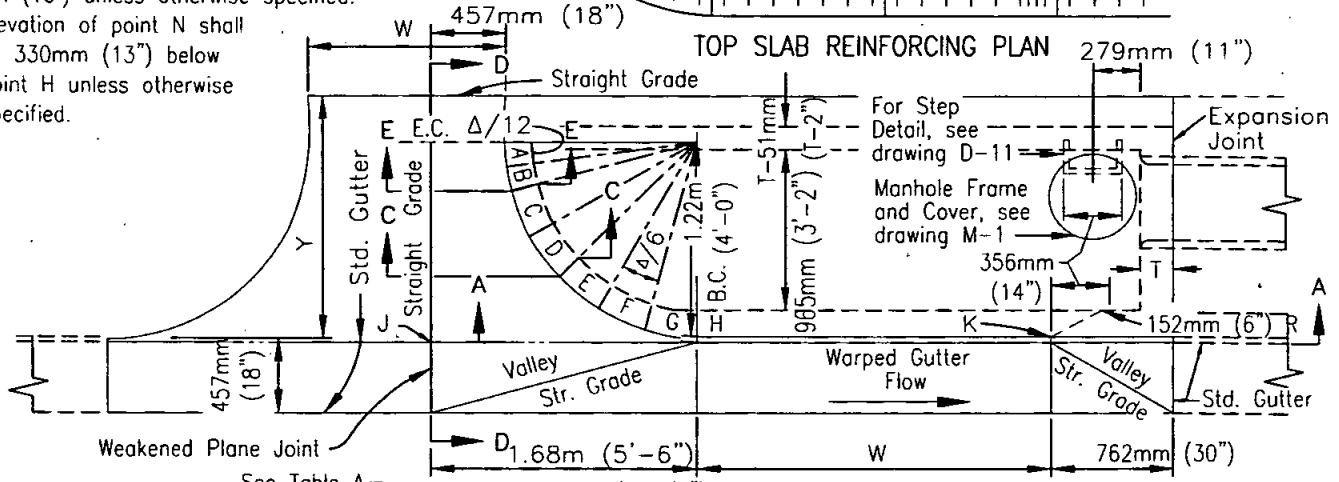

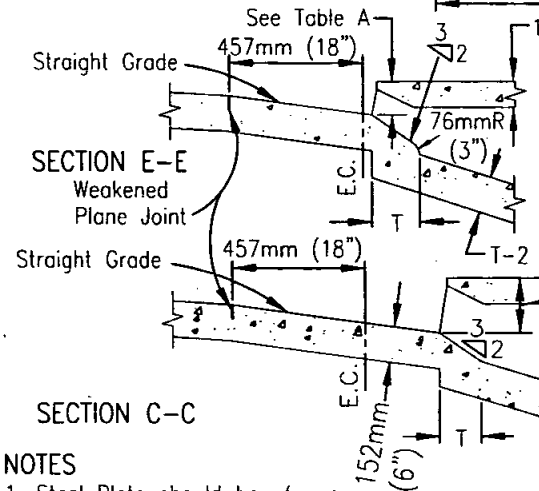

SECTION E-E
Weakened Plane Joint

SECTION C-C

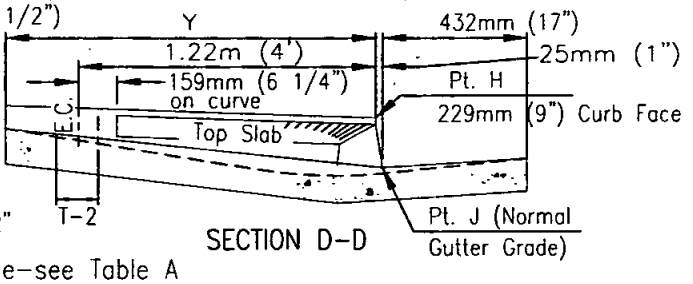

SECTION D-D

	PT	A	B	C	D	E	F	G	H	K	M
METRIC (mm)	F.C.	114	133	152	191	229	229	229	229	229	203
U.S. (inches)	F.C.	4½"	5¼"	6"	7½"	9"	9"	9"	9"	9"	8"

TABLE A

NOTES

1. Steel Plate should be of one continuous piece with curve portion a circular arc.
   Length = Width+457mm (18")+circular arc.
2. #13 (#4) rebar 762mm (30") long, 305mm (1') O.C. shall be installed in top of walls for ties to top and gutters.
3. The reinforcing steel in the top slab shall be #10 (#3) bars 152mm (6") O.C. unless otherwise specified. Clearance shall be 38mm (1-1/2") from the bottom of the slab.
4. Concrete for the inlet top to be placed at the same time as the s/w curb and gutter.
5. Concrete shall be 332kg/M3-C-22-Mpa (560-C-3250)
6. Exposed edges of concrete shall be rounded with a radius of 13mm (1/2").
7. Surface of top slab shall be sidewalk finished to drain toward street at a slope of 6.35mm (1/4" per foot.)

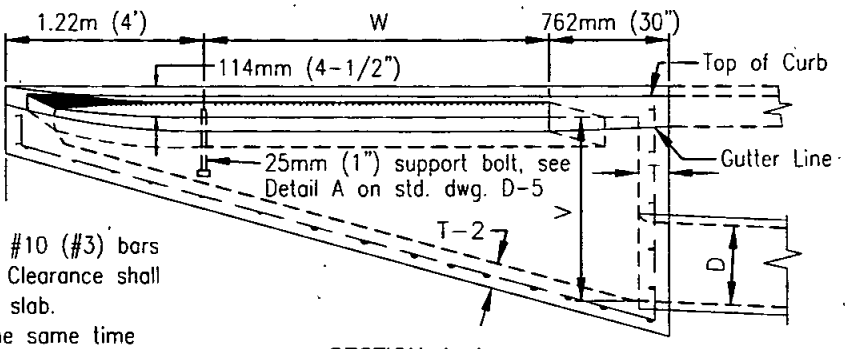

SECTION A-A

Revision	By	Approved	Date
ORIGINAL		Kercheval	12/75
Add Metric		T. Stanton	03/03

SAN DIEGO REGIONAL STANDARD DRAWING

CURB INLET - TYPE D

RECOMMENDED BY THE SAN DIEGO REGIONAL STANDARDS COMMITTEE

T. Stanton 3/10/2003

Chairperson R.C.E. 19246 Date

DRAWING NUMBER D-4

Revision	By	Approved	Date
ORIGINAL		Kercheval	12/75
Add Metric		T. Stanton	03/03

SAN DIEGO REGIONAL STANDARD DRAWING

CURB INLET - TYPE D (DETAILS)

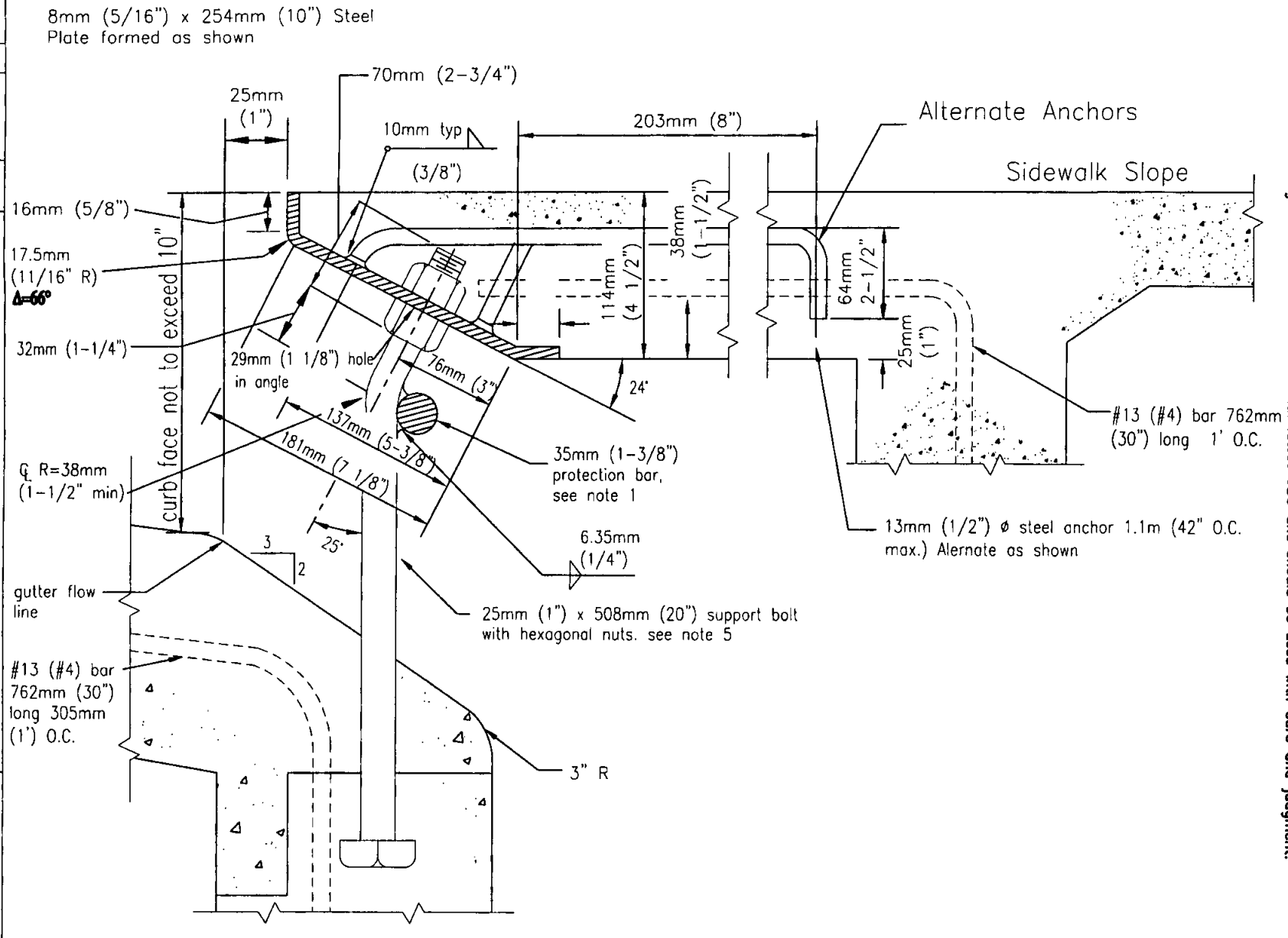

RECOMMENDED BY THE SAN DIEGO REGIONAL STANDARDS COMMITTEE

Chairperson R.C.E. 19246 Date 3/10/2003

DRAWING NUMBER D-5A

This drawing is NOT in conformance with latest UBC and should be used with care and judgment.

This drawing is NOT in conformance with latest UBC and should be used with care and judgment.

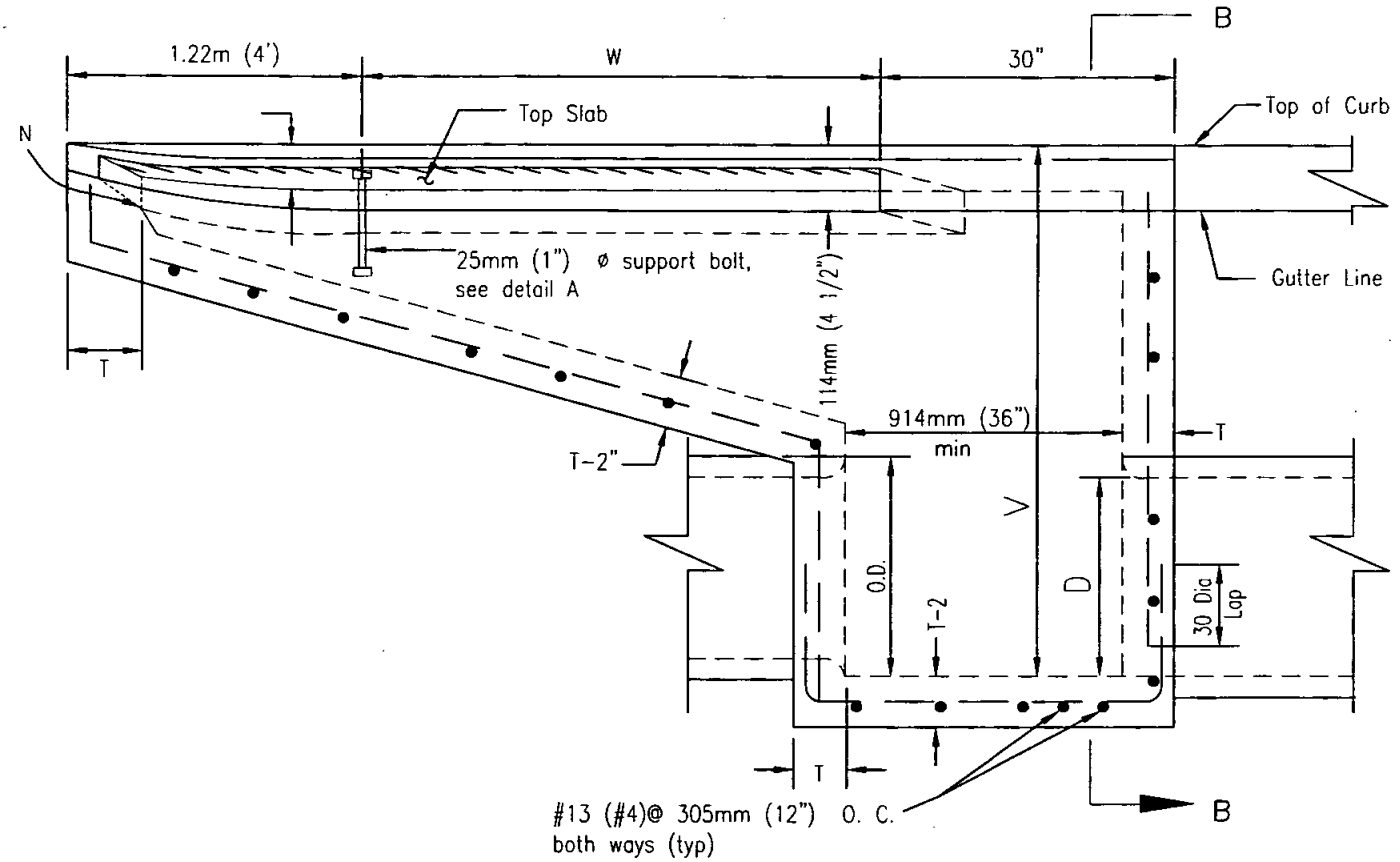

SECTION A–A MODIFIED

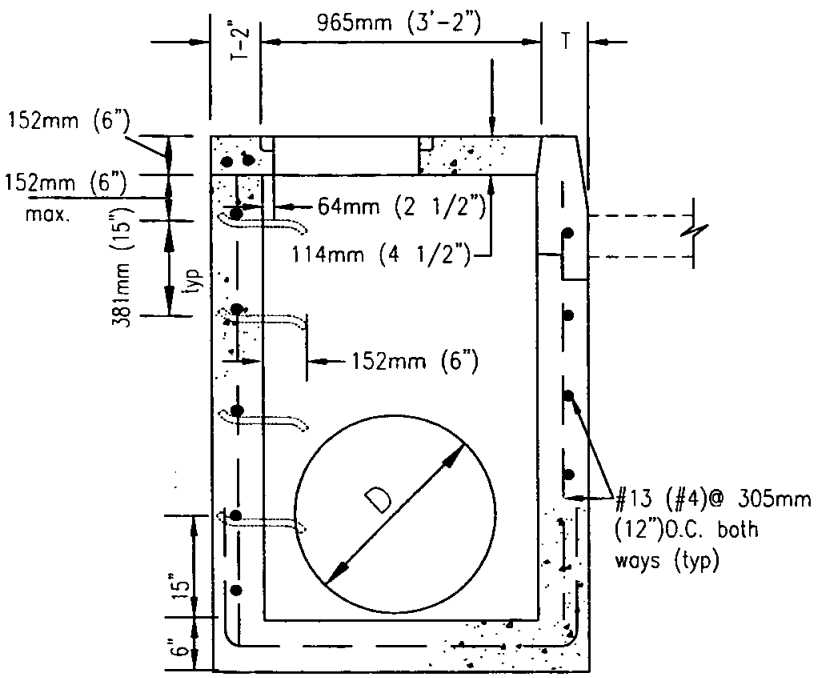

SECTION B–B

NOTES

1. A plain, round steel protection bar 25mm (1") in dia. shall be installed. Bar shall be embedded 127mm (5") at each end.
2. Leave 203mm (8") hole blocked out in the bottom placing of concrete for bolts placed at the same time as gutter.
3. All exposed metal parts shall be galvanized.
4. All galvanizing damaged by welding shall receive two coats of aluminum paint.
5. Support bolts shall be spaced at not more than 1.52m (5'-0") O.C.
6. Adjusting nuts to be tightened and secured in placed when steel plate is in proper position.

Revision	By	Approved	Date
ORIGINAL		Kercheval	12/75
Add Metric		T. Stanton	03/03

SAN DIEGO REGIONAL STANDARD DRAWING

CURB INLET – TYPE D (DETAILS)

RECOMMENDED BY THE SAN DIEGO REGIONAL STANDARDS COMMITTEE

T. Stanton 3/10/2003

Chairperson R.C.E. 19246 Date

DRAWING NUMBER D-5B

This drawing is NOT in conformance with latest UBC and should be used with care and judgment.

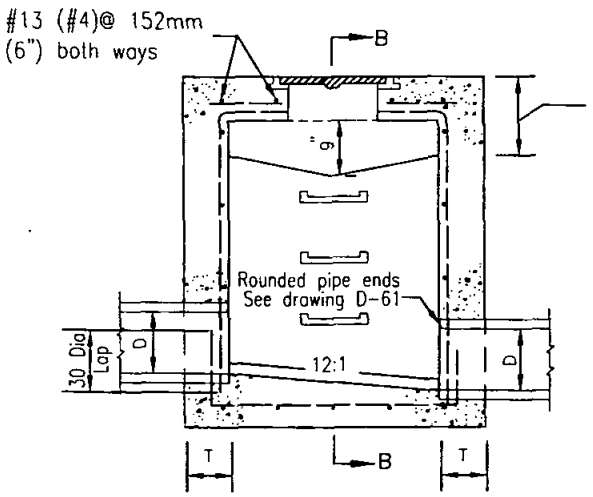

SECTION A-A

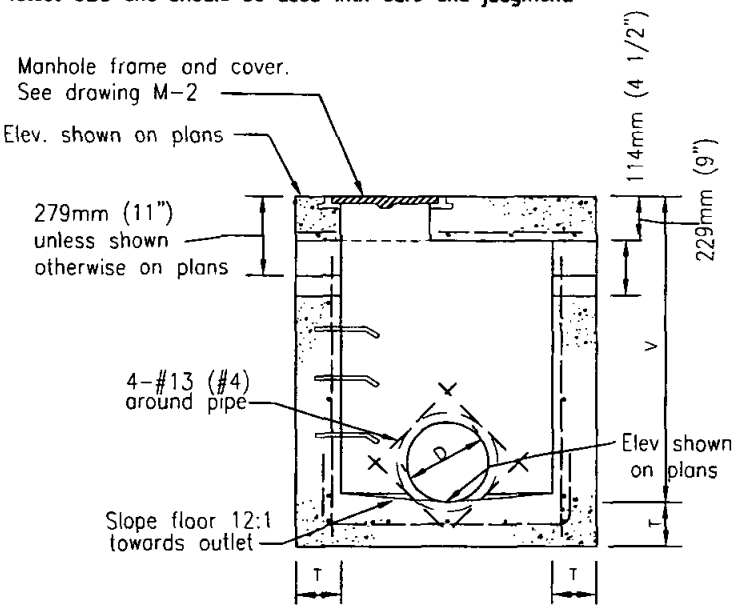

SECTION B-B

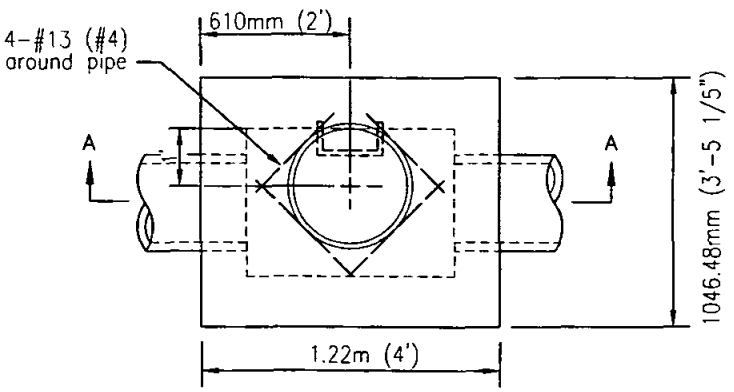

PLAN

NOTE

1. See Standard Drawing D-11 for additional notes and details.
2. When V exceeds 1.22m (4') steps shall be installed. See Standard Drawing D-11 for details.
3. Exposed edges of concrete shall be rounded with a radius of 13mm (1/2").
4. Construct openings on both sides unless otherwise shown on plans.
5. Maintain 38mm (1-1/2") clear spacing between reinforcing and surface.
6. Install 1"ø steel protection bar

LEGEND ON PLANS

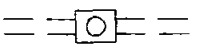

Revision	By	Approved	Date
ORIGINAL		Kercheval	12/75
Add Metric		T. Stanton	03/03

SAN DIEGO REGIONAL STANDARD DRAWING

CATCH BASIN - TYPE F

RECOMMENDED BY THE SAN DIEGO REGIONAL STANDARDS COMMITTEE

T. Stanton 3/10/2003

Chairperson R.C.E. 19246 Date

DRAWING NUMBER D-7

This drawing is NOT in conformance with latest UBC and should be used with care and judgment.

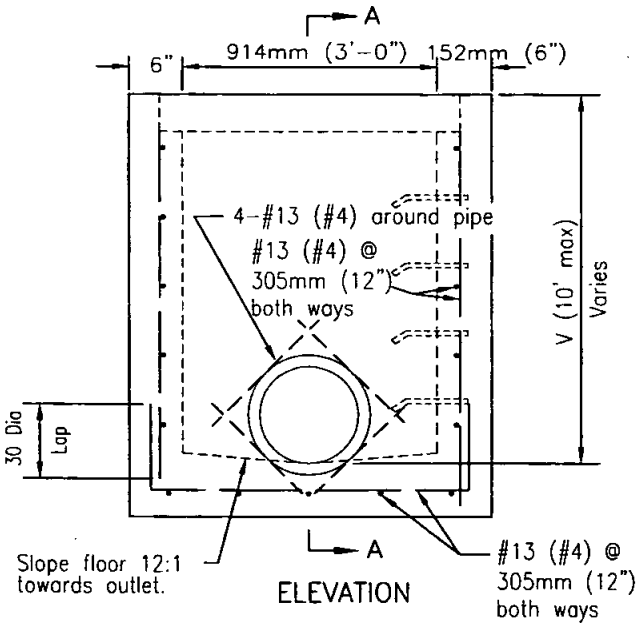

ELEVATION

NOTES

1. See Standard Drawing D-11 for additional notes and details.
2. When V exceeds 1.22m (4'), steps shall be installed. See Standard Drawing D-11 for details.
3. Maintain 38mm (1-1/2") clear spacing between reinforcing and surface.
4. Increase in allowable depth subject to approval by Agency.
5. Section A-A shows 3 sizes and shall not imply that an interior wall is to be built for the structures with with double or triple frame and grate.
6. Exposed edges of concrete shall be rounded with radius of 13mm (1/2").
7. Designate types as follows: Single G-1, Double G-2 and Triple G-3.
8. Only end bearing grates shall be used. See Std. Drawing D-15.

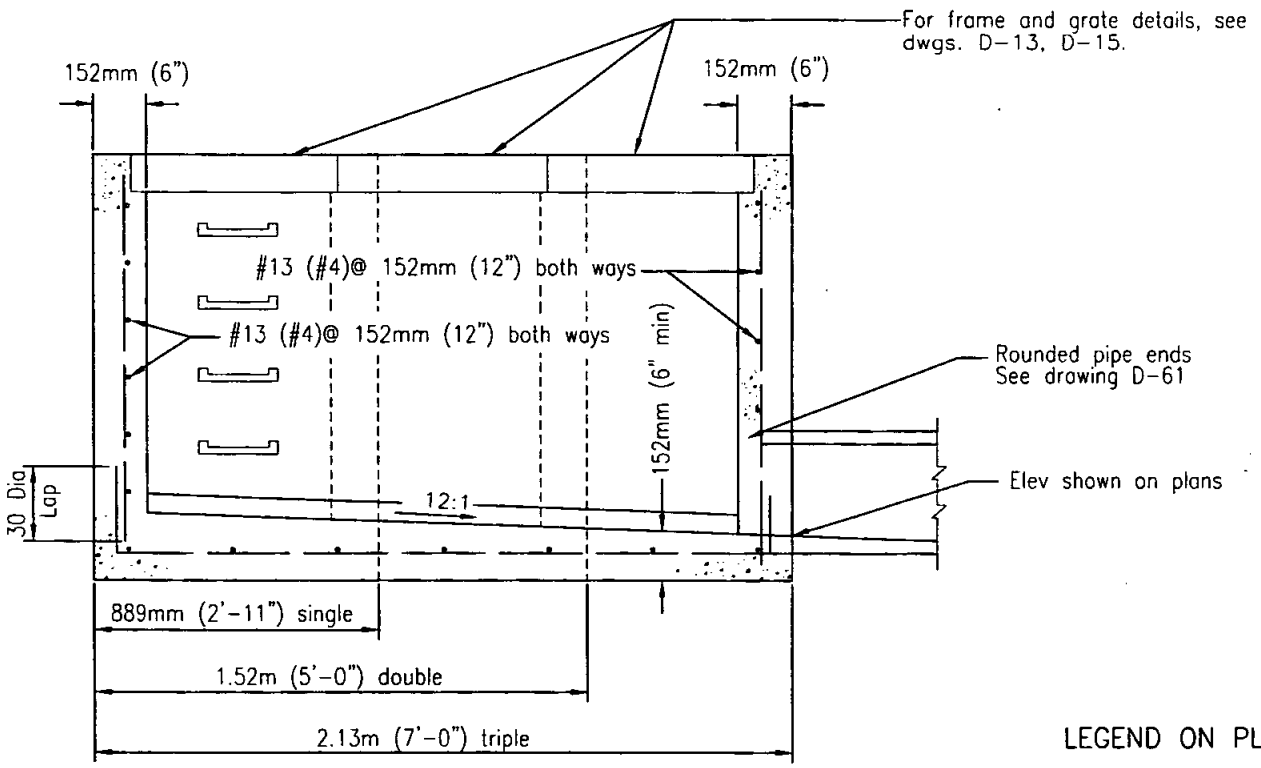

SECTION A-A

LEGEND ON PLANS

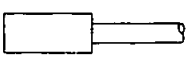

Revision	By	Approved	Date
ORIGINAL		Kercheval	12/75
Add Metric		T. Stanton	03/03

SAN DIEGO REGIONAL STANDARD DRAWING

CATCH BASIN - TYPE G

RECOMMENDED BY THE SAN DIEGO. REGIONAL STANDARDS COMMITTEE

3/01/2003

Chairperson R.C.E. 19246 Date

DRAWING NUMBER D-8

This drawing is NOT in conformance with latest UBC and should be used with care and judgment.

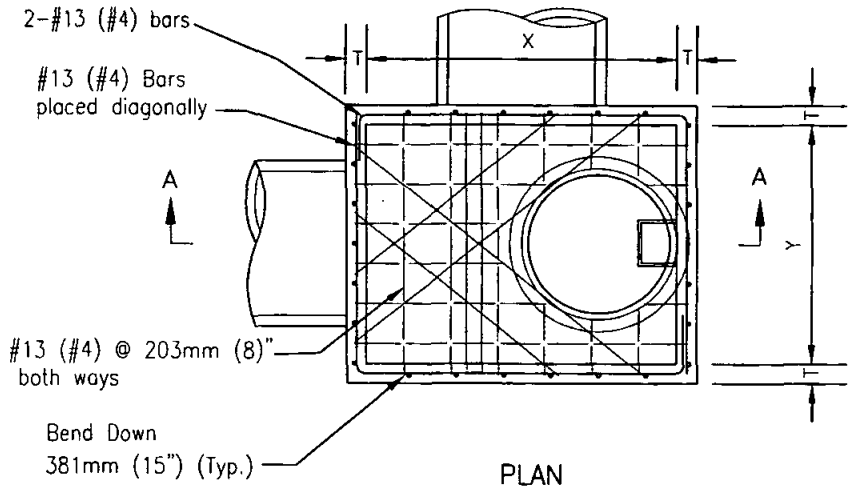

PLAN

TYPE	PIPE DIA.	X	Y	Z
A 4	up to 991mm (39")	1.22m (4')	1.22m (4')	1.83m (6')
A 5	1.1m (42") to 1.22m (48")	1.52m (5')	1.22m (4')	1.83m (6')
A 6	1.30m (51") to 1.50m (60")	1.83m (6')	1.22m (4')	1.83m (6')
A 7	1.60m (63") to 1.80m (72")	2.13m (7')	1.22m (4')	2.13m (7')
A 8	1.90m (75") to 2.13m (84")	2.44m (8')	1.22m (4')	2.44m (8')

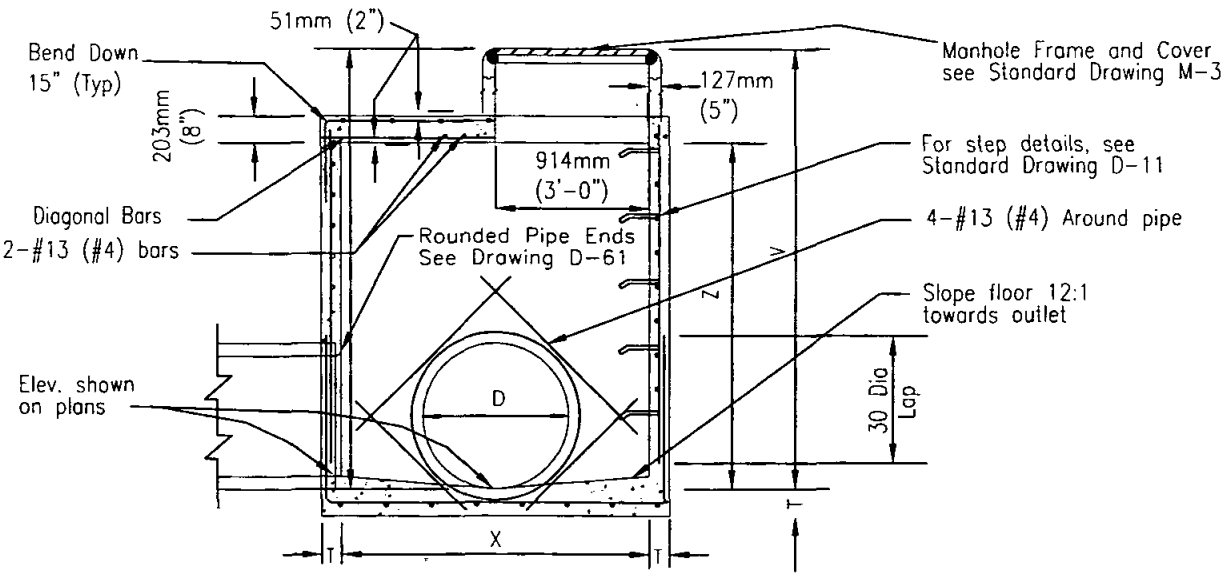

SECTION A-A

NOTES

1. See Standard Drawing D-11 for additional notes and details.
2. Concrete base shall be 332kg/M3-C-22Mpa (560-C-3250)
3. All precast components shall be reinforced with 6.35mm (1/4") diameter steel, wound spirally on 102mm (4") centers.
4. All joints shall be set in Class C mortar.
5. Maintain 38mm (1 1/2") clear spacing between reinforcing and surface unless otherwise noted.
6. Exposed edges of concrete shall be rounded with a radius of 13mm (1/2").

LEGEND ON PLANS

Revision	By	Approved	Date
ORIGINAL		Kercheval	12/75
Add Metric		T. Stanton	03/03

SAN DIEGO REGIONAL STANDARD DRAWING

STORM DRAIN CLEANOUT - TYPE A

RECOMMENDED BY THE SAN DIEGO REGIONAL STANDARDS COMMITTEE

T. Stanton 3/10/2003

Chairperson R.C.E. 19246 Date

DRAWING NUMBER D-9

This drawing is NOT in conformance with latest UBC and should be used with care and judgment.

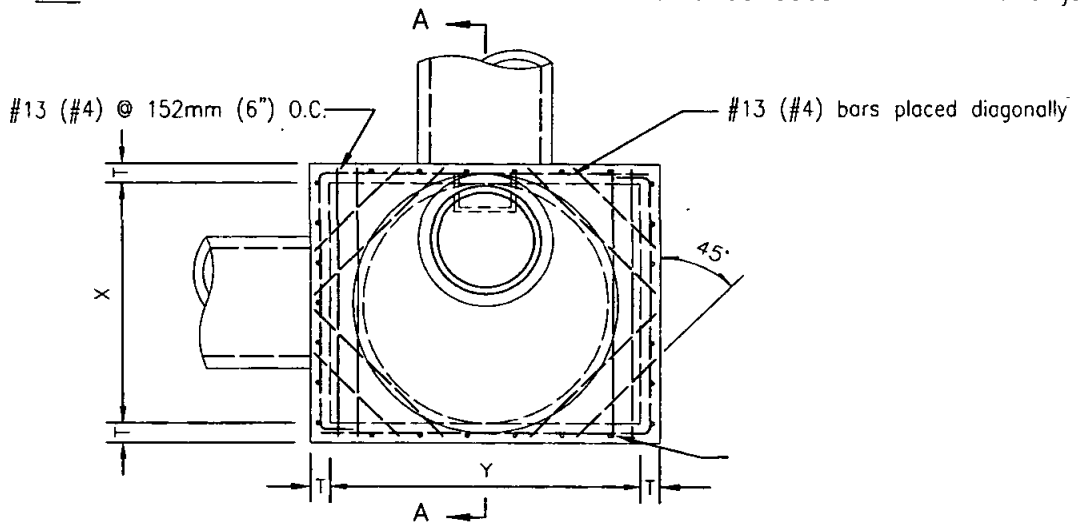

PLAN

TYPE	PIPE DIA.	X	Y	Z
A 4	up to 1.30m (51")	1.22m (4')	1.53m (5')	1.53m (5')
A 5	1.37m (54") to 1.52m (60")	1.22m (4')	1.83m (6')	1.83m (6')
A 6	1.60m (63") to 1.80m (69")	1.22m (4')	2.13m (7')	2.13m (7')
A 7	1.83m (72") to 2.10m (81")	1.22m (4')	2.44m (8')	2.44m (8')
A 8	2.13m (84") to 2.30m (90")	1.22m (4')	2.74m (9')	2.74m (9')

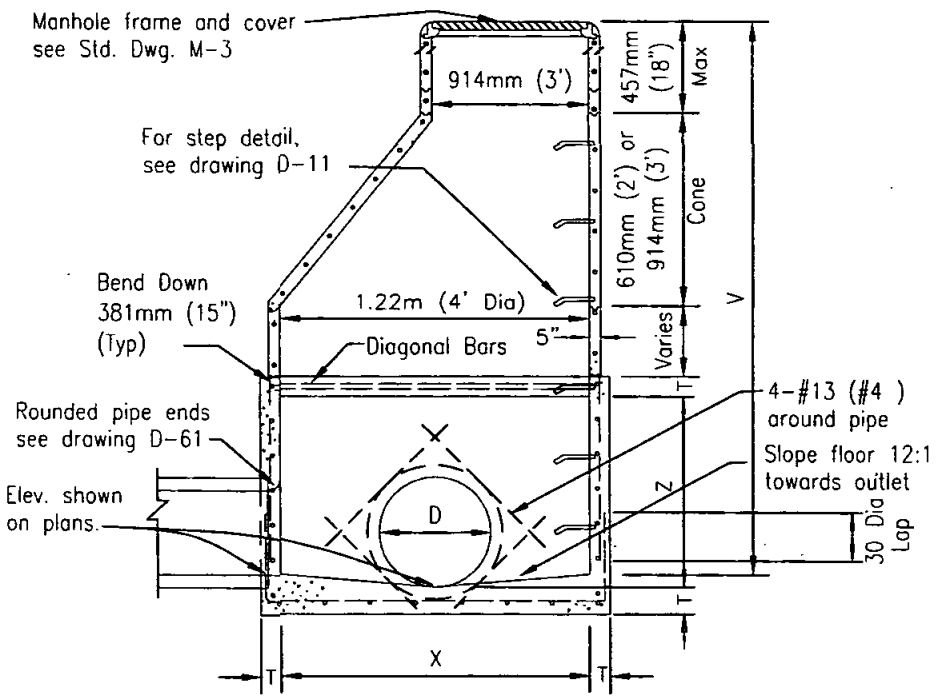

SECTION A-A

NOTES

1. See Standard Drawing D-11 for additional notes and details.
2. All joints shall be set in Class C mortar.
3. All precast components shall be reinforced with 6.35mm (1/4") diameter steel wound spirally on 102mm (4") centers.
4. Maintain 38mm (1-1/2") clear spacing between reinforcing and surface.
5. Concrete base shall be 332kg/M3-C-22-Mpa (560-C-3250).
6. Exposed edges of concrete shall be rounded with a radius of 13mm (1/2").
7. Manhole cover to be designated "Storm Drain".

LEGEND ON PLANS

Revision	By	Approved	Date
ORIGINAL		Kercheval	12/75
Add Metric		T. Stanton	03/03

SAN DIEGO REGIONAL STANDARD DRAWING

STORM DRAIN CLEANOUT - TYPE B

RECOMMENDED BY THE SAN DIEGO REGIONAL STANDARDS COMMITTEE

T. Stanton 3/10/2003

Chairperson R.C.E. 19246 Date

DRAWING NUMBER D-10

This drawing is NOT in conformance with latest UBC and should be used with care and judgment.

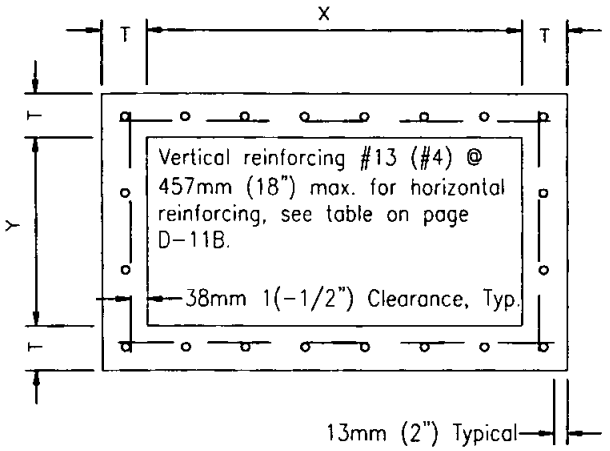

TYPICAL BOX SECTION

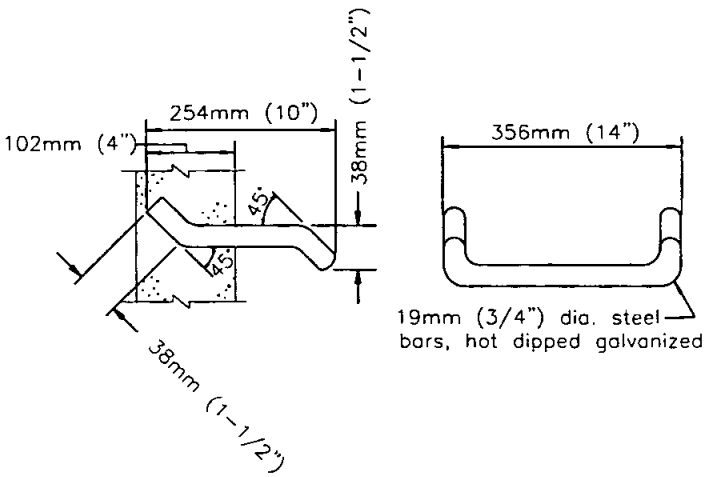

STEP DETAIL

NOTES

1. Concrete shall be 332kg/M3-C-22-Mpa (560-C-3250) unless otherwise noted.
2. Reinforcing steel shall comply with this drawing unless otherwise specified.
3. Reinforcing steel shall be intermediate grade deformed bars conforming to latest ASTM specifications.
4. Bends shall be in accordance with latest ACI code.
5. Minimum splice length for reinforcing shall be 30 diameters.
6. Floor shall have a wood trowel finish and, except where used as junction boxes, shall have a minimum slope of 1 inch per foot toward the outlet.
7. Depth V is measured from the top of the structure to the flowline of the box.
8. Wall thickness and reinforcing steel required may be decreased in accordance with table above.
9. Wall thickness shall be stepped on the outside of the box.
10. When the structure depth V exceeds 4 feet, steps shall be cast into the wall at 381mm (15") intervals from 381mm (15") above floor to within 305MM (12) inches of top of structure. Where possible place steps in wall without pipe opening, otherwise over opening of smallest diameter.
11. Alternate step may be an approved steel reinforced polypropylene step.
12. Upon approval of the Agency and the Engineer, as defined by Section 6703 of the Business and Professions Code, the use of precast storm structures is acceptable as an alternate to cast-in-place. Precast units shall conform to ASTM standards and be manufactured in a permanent facility designed for that purpose.

Revision	By	Approved	Date
ORIGINAL		Kercheval	12/75
Add Metric		T. Stanton	03/03

SAN DIEGO REGIONAL STANDARD DRAWING

INLETS AND CLEANOUTS
NOTES AND DETAILS

RECOMMENDED BY THE SAN DIEGO REGIONAL STANDARDS COMMITTEE

3/01/2003

Chairperson R.C.E. 19246 Date

DRAWING NUMBER D-11A

This drawing is NOT in conformance with latest UBC and should be used with care and judgment.

BOX SECTION REINFORCEMENT			
MAXIMUM SPAN X or Y	DEPTH V	THICKNESS T	HOR. & FLR. REINF.
914mm (3'-0") to 1.22m (4'-0")	1.22m (4'-0")	152mm (6")	#13 (#4) @ 457mm (18")
1.24m (4'-1") to 2.13m (7'-0")		152mm (6")	#13 (#4) @ 305mm (12")
2.16m (7'-1") to 2.44m (8'-0")		152mm (6")	#13 (#4) @ 203mm (8")
914mm (3'-0") to 1.22m (4'-0")	1.24m to 2.44m (4'-1"to 8'-0")	152mm (6")	#13 (#4) @ 457mm (18")
1.24m (4'-1") to 1.52m (5'-0")		152mm (6")	#13 (#4) @ 305mm (12")
1.55m (5'-1") to 1.83m (6'-0")		152mm (6")	#13 (#4) @ 203mm (8")
1.85m (6'-1") to 2.44m (8'-0")		152mm (6")	#13 (#4) @ 152mm (6")
914mm (3'-0") to 1.22m (4'-0")	2.46m to 3.66m (8'-1" to 12'-0")	152mm (6")	#13 (#4) @ 381mm (15")
1.24m (4'-1") to 1.52m (5'-0")		203mm (8")	#13 (#4) @ 305mm (12")
1.55m (5'-1") to 1.83m (6'-0")		203mm (8")	#13 (#4) @ 203mm (8")
1.85m (6'-1") to 2.44m (8'-0")		203mm (8")	#13 (#4) @ 152mm (6")
914mm (3'-0") to 1.22m (4'-0")	3.68m to 4.88m 12'-1" to 16'-0"	203mm (8")	#13 (#4) @ 305mm (12")
1.24m (4'-1") to 1.52m (5'-0")		203mm (8")	#13 (#4) @ 305mm (12")
1.55m (5'-1") to 1.83m (6'-0")		203mm (8")	#13 (#4) @ 203mm (8")
1.85m (6'-1") to 2.13m (7'-0")		203mm (8")	#13 (#4) @ 152mm (6")
2.13m (7'-1") to 2.44m (8'-0")		203mm (8")	#13 (#5) @ 203mm (8")
914mm (3'-0") to 1.22m (4'-0")	4.90m to 6.10m 16'-1" to 20'-0"	203mm (8")	#13 (#4) @ 305mm (12")
1.24m (4'-1") to 1.52m (5'-0")		254mm (10")	#13 (#4) @ 305mm (12")
1.55m (5'-1") to 1.83m (6'-0")		254mm (10")	#13 (#4) @ 203mm (8")
1.85m (6'-1") to 2.13m (7'-0")		254mm (10")	#13 (#4) @ 152mm (6")
2.13m (7'-1") to 2.44m (8'-0")		254mm (10")	#13 (#5) @ 203mm (8")
914mm (3'-0") to 1.22m (4'-0")	6.12m to 7.32m 20'-1" to 24'-0"	203mm (8")	#13 (#4) @ 305mm (12")
1.24m (4'-1") to 1.52m (5'-0")		254mm (10")	#13 (#4) @ 305mm (12")
1.55m (5'-1") to 1.83m (6'-0")		254mm (10")	#13 (#4) @ 203mm (8")
1.85m (6'-1") to 2.13m (7'-0")		254mm (10")	#13 (#4) @ 152mm (6")
2.13m (7'-1") to 2.44m (8'-0")		305mm (12")	#13 (#5) @ 203mm (8")

HORIZONTAL REINFORCING

Revision	By	Approved	Date
ORIGINAL		Kercheval	12/75
Add Metric		T. Stanton	03/03

SAN DIEGO REGIONAL STANDARD DRAWING

INLETS AND CLEANOUTS
NOTES AND DETAILS

RECOMMENDED BY THE SAN DIEGO REGIONAL STANDARDS COMMITTEE

T. Stanton 3/10/2003

Chairperson R.C.E. 19246 Date

DRAWING NUMBER D-11B

This drawing is NOT in conformance with latest UBC and should be used with care and judgment.

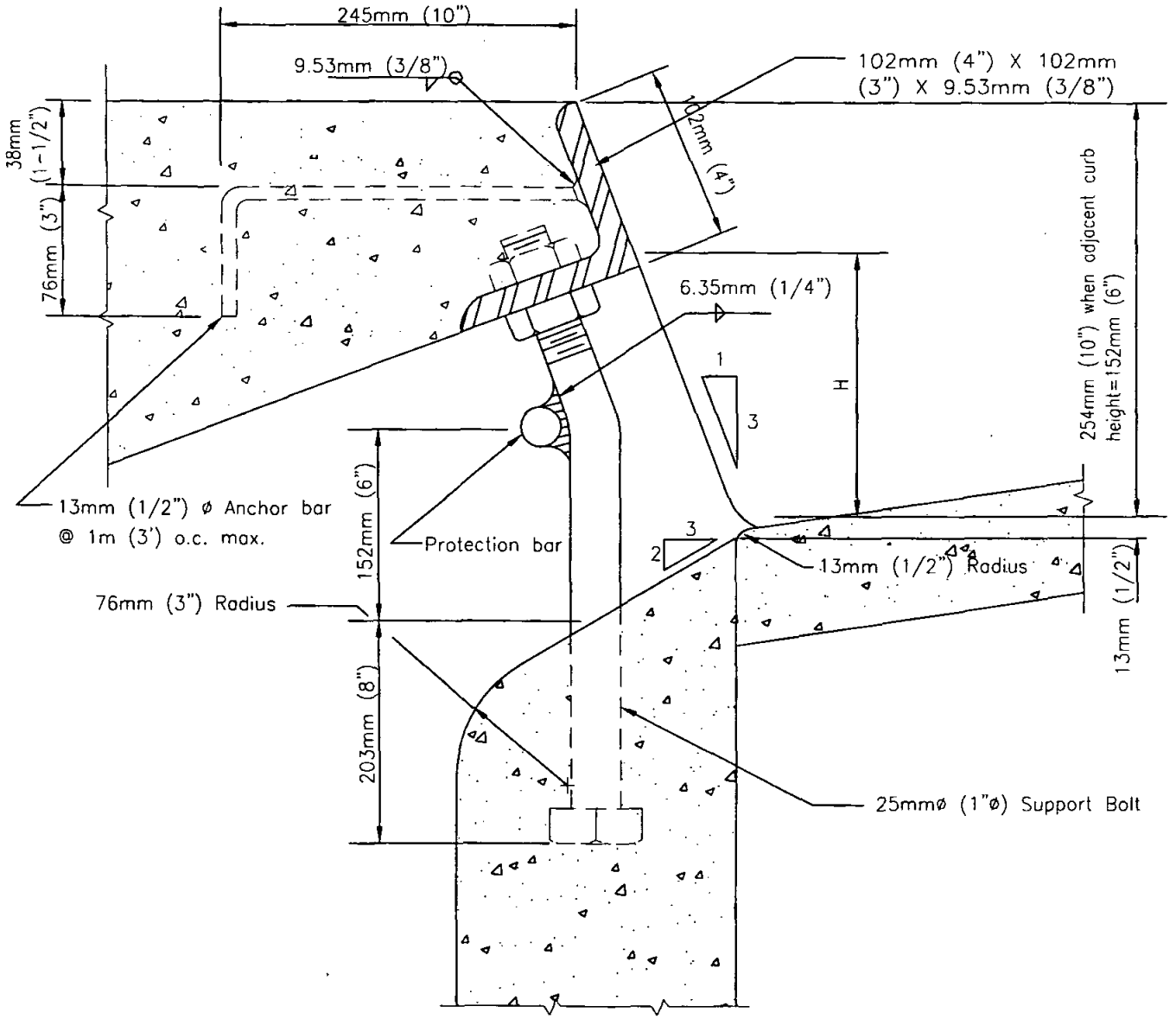

NOTES

1. Face angle shall be cast into structure continuous for the full lenght "L".
2. All exposed metal parts shall be hot-dipped galvanized after fabrication.
3. When curb inlet opening height (H) exceeds 152mm (6") install 25mm (1"ø) steel protection bar.
4. Install additional bars at 89mm (3-1/2") clear spacing above first bar when opening exceeds 330mm (13").
5. When curb inlet opening length exceeds 2.44m (8') install 254mm (1"ø) Steel support bolts, spaced at not more than 1.52m (5') o.c.

Revision	By	Approved	Date
ORIGINAL		Kercheval	12/75
Add Metric		T. Stanton	03/03

SAN DIEGO REGIONAL STANDARD DRAWING

CURB INLET OPENING

RECOMMENDED BY THE SAN DIEGO REGIONAL STANDARDS COMMITTEE

T. Stanton 3/10/2003

Chairperson R.C.E. 19246 Date

DRAWING NUMBER D-12

This drawing is NOT in conformance with latest UBC and should be used with care and judgment.

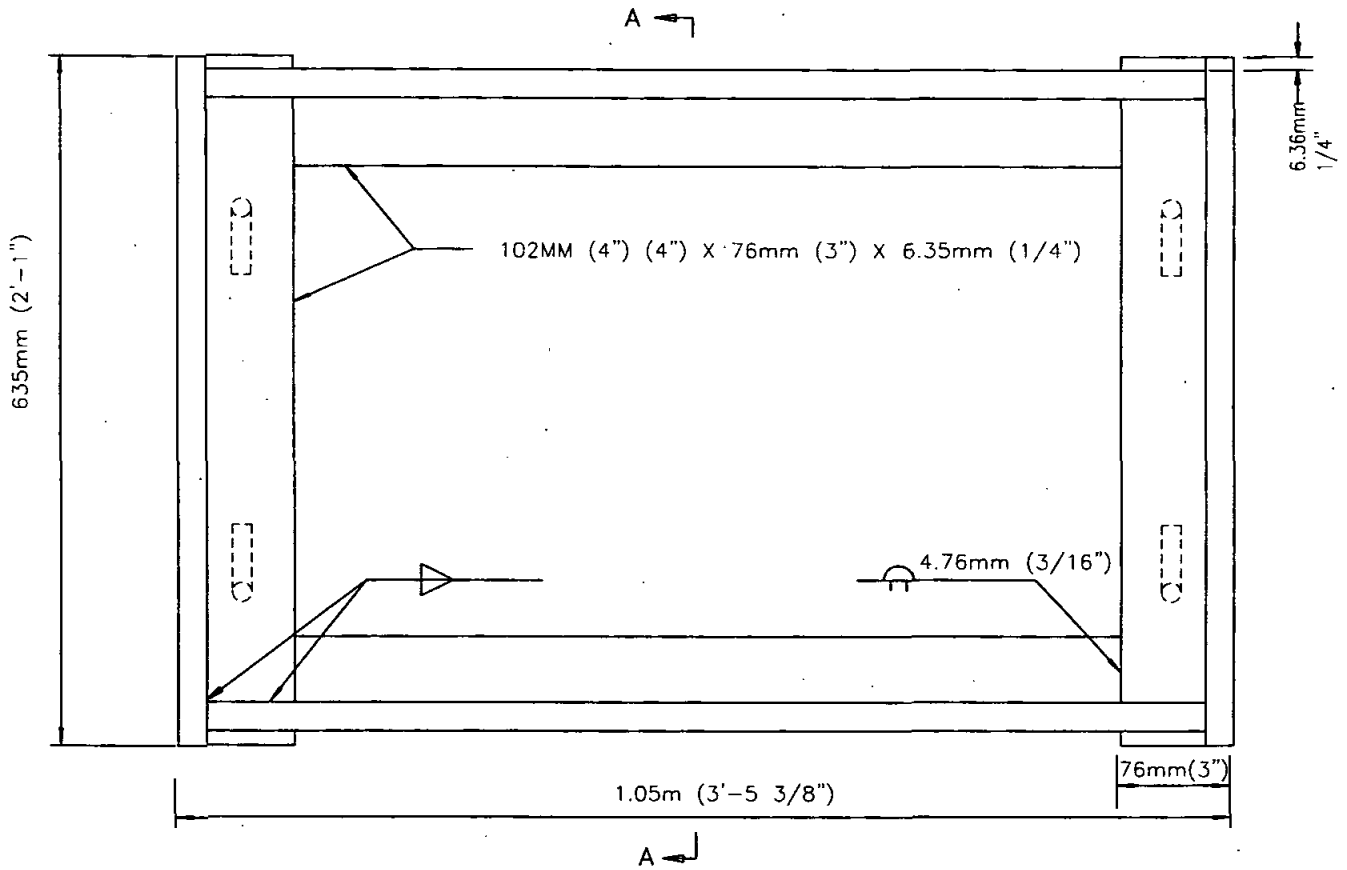

PLAN

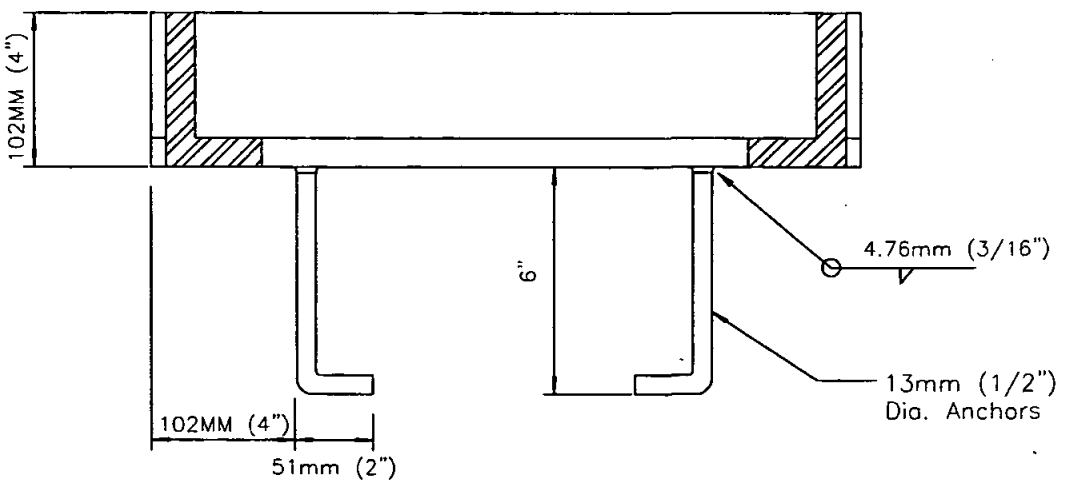

SECTION A–A

NOTE
Hot dip galvanize all parts after fabrication.

Revision	By	Approved	Date
ORIGINAL		Kercheval	12/75
Add Metric.		T. Stanton	03/03

SAN DIEGO REGIONAL STANDARD DRAWING

WELDED STEEL GRATE FRAME

RECOMMENDED BY THE SAN DIEGO REGIONAL STANDARDS COMMITTEE

T. Stanton 3/10/2003

Chairperson R.C.E. 19246 Date

DRAWING NUMBER D-13

This drawing is NOT in conformance with latest UBC and should be used with care and judgment.

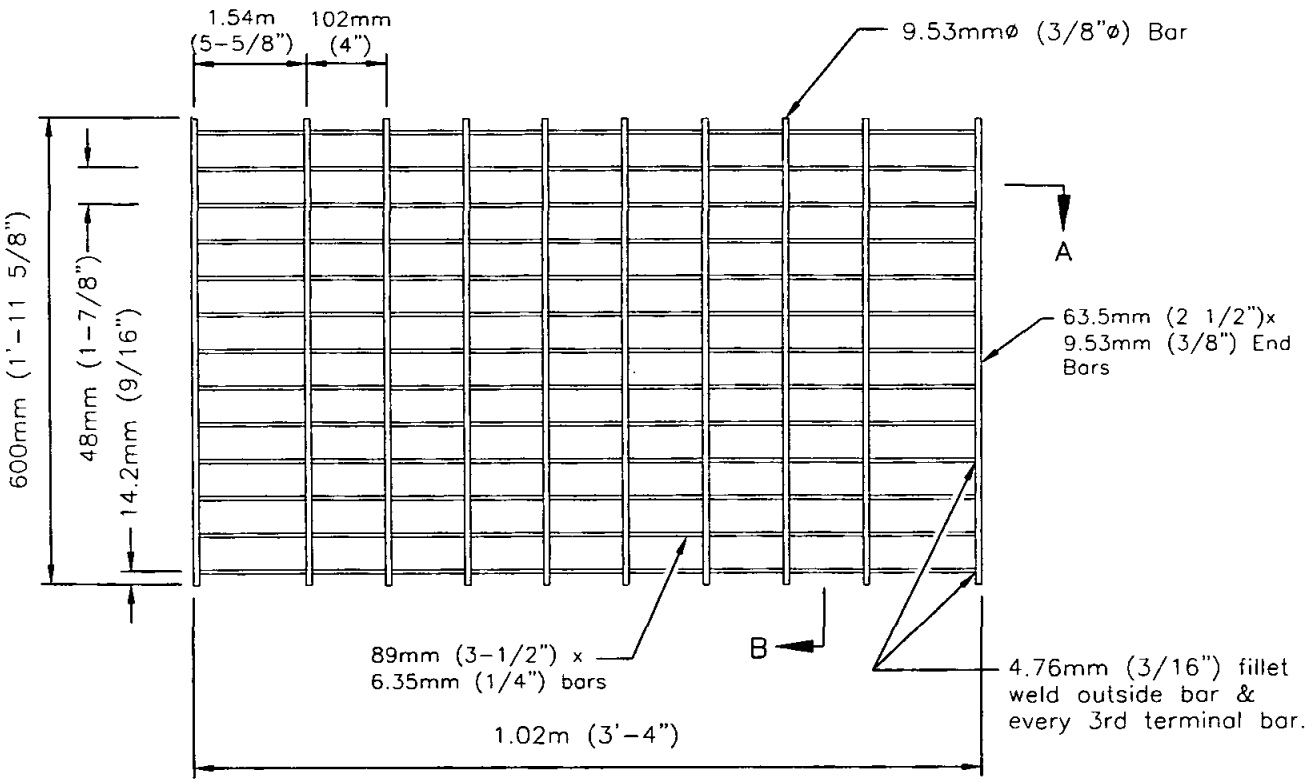

PLAN

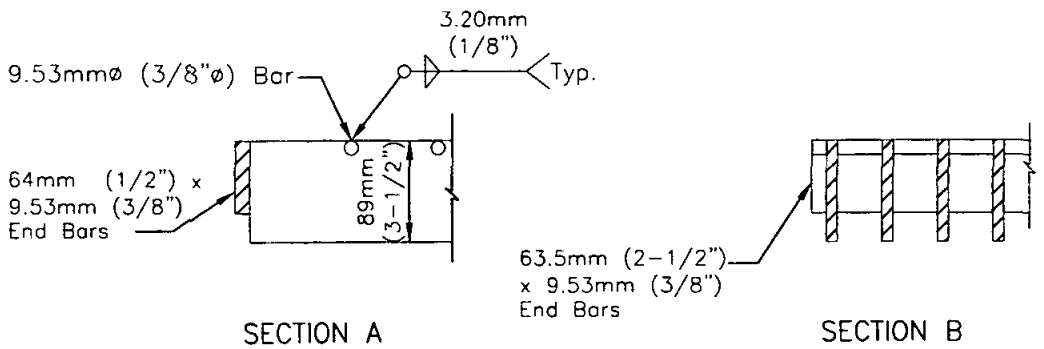

SECTION A

SECTION B

NOTES
1. Hot dip galvanize all parts after fabrication.
2. Dimensions to centerline of bars unless otherwise noted.
3. Weight: 64kg (141) pounds.
4. Not to be used in pedestrian areas.

Revision	By	Approved	Date
ORIGINAL		Kercheval	12/75
Add Metric		T. Stanton	03/03

SAN DIEGO REGIONAL STANDARD DRAWING

DRAINAGE STRUCTURE GRATE

RECOMMENDED BY THE SAN DIEGO REGIONAL STANDARDS COMMITTEE

T. Stanton 3/10/2003

Chairperson R.C.E. 19246 Date

DRAWING NUMBER D-15

This drawing is NOT in conformance with latest UBC and should be used with care and judgment.

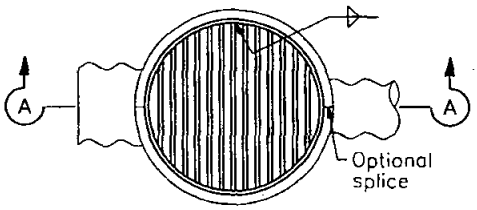

Punch 25mm (1") hole in CSP
Place pipe so bars of grate will be parallel with main surface flow.

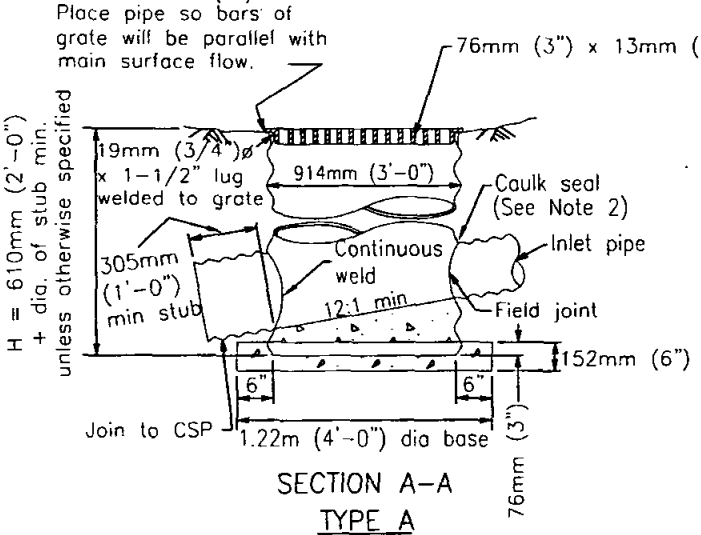

SECTION A-A
TYPE A

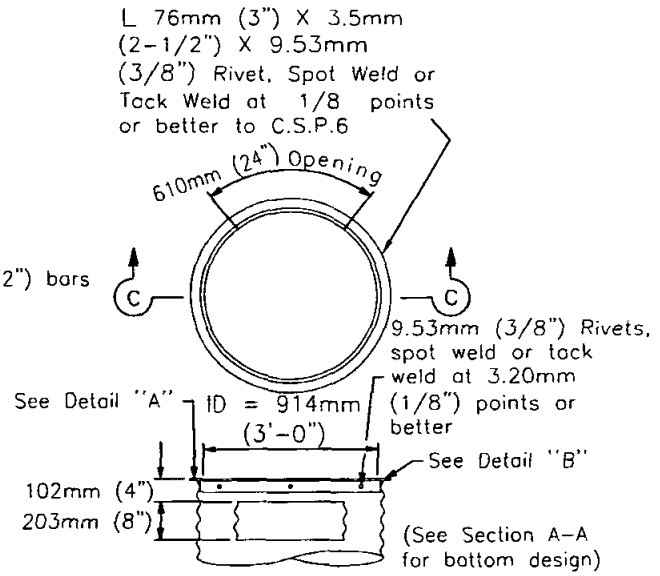

SECTION C-C
TYPE B

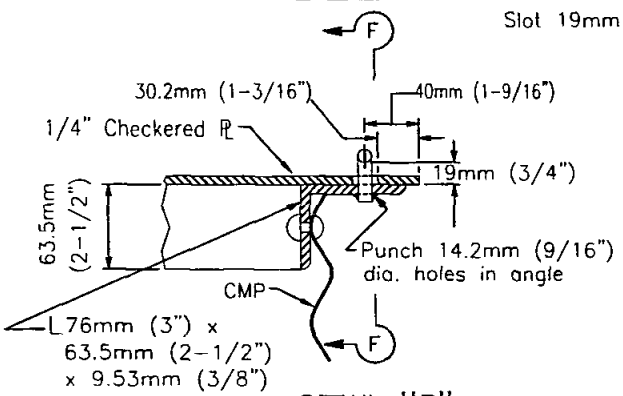

DETAIL "B"

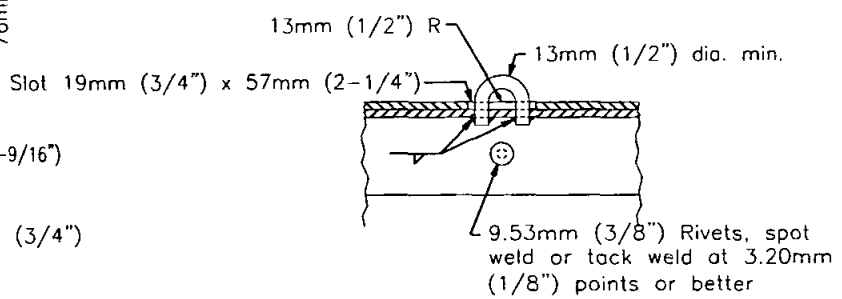

SECTION F-F

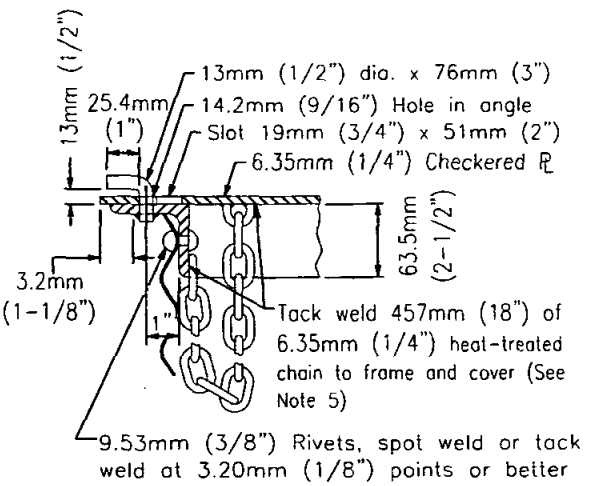

DETAIL "A"

NOTES

1. All components shall be galvanized.
2. Inlet and outlet pipes shall be set at factory and positioned as shown on plans
3. Ladders and Steps: None required where "H" is 1.10m (3'-6") or less. Where "H" is between 1.10m (3'-6") and 1.50m (4'-11") place one step + 406mm (16") above the floor. If "H " is 1.52m (5') or more install a ladder placing lowest rung 406mm (16") above the floor and the highest rung not more than 356mm (14") below top of inlet. Place single step or ladder in wall with wall opening.
4. See Standard Drawing D-17 for additional details.
5. Grate to be provided when specified.
6. Grate detail shall be as shown on Standard Drawing D-17 unless otherwise approved by Agency.

Revision	By	Approved	Date
ORIGINAL		Kercheval	12/75
Add Metric		T. Stanton	03/03

SAN DIEGO REGIONAL STANDARD DRAWING

CORRUGATED STEEL PIPE INLETS
TYPES A AND B

RECOMMENDED BY THE SAN DIEGO REGIONAL STANDARDS COMMITTEE

T. Stanton 3/10/2003

Chairperson R.C.E. 19246 Date

DRAWING NUMBER D-16

This drawing is NOT in conformance with latest UBC and should be used with care and judgment.

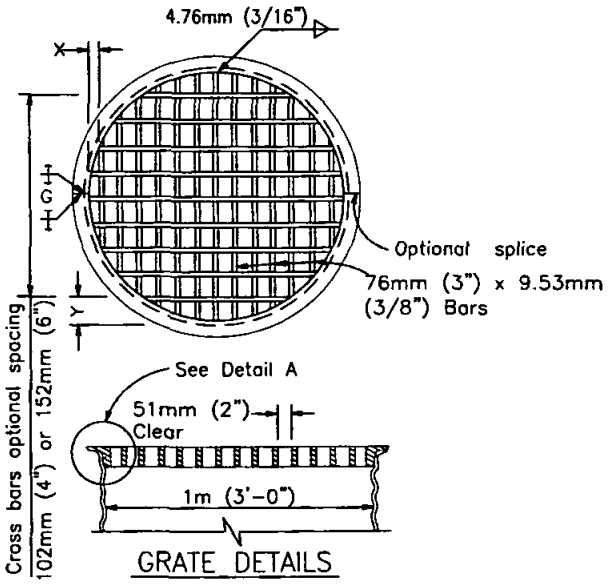

GRATE DETAILS

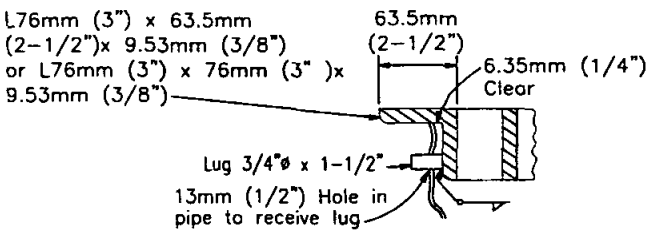

DETAIL A

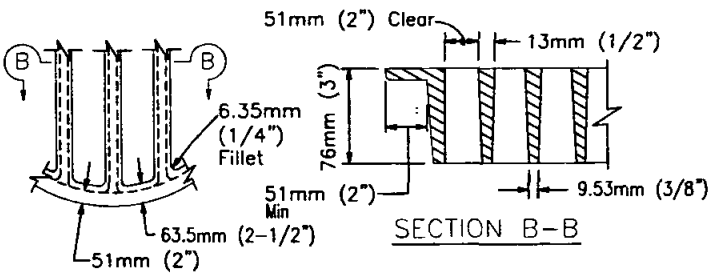

SECTION B-B

ALTERNATIVE CAST NODULAR IRON GRATE OR CAST STEEL GRATE

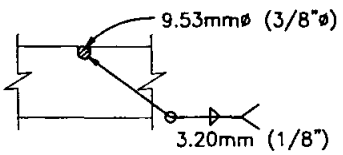

3/8"ø Cross bars may be fillet welded, resistance welded or electroforged to bearing bars.

CROSS BAR DETAIL TYPE WELDED STEEL GRATE

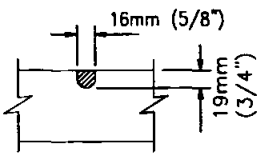

CROSS BAR DETAIL ALTERNATIVE CAST NODULAR IRON GRATE OR CAST STEEL GRATE

GRATE BAR SPACING TABLE

TYPE	NO. OF BARS	CLEAR BAR SPACING	X	Y	
				4" SPACING	6" SPACING
Welded Steel	15	51mm (2")	14.2mm (9/16")	95mm (3-3/4")	146mm (5-3/4")
Cast	13	51mm (2")	54mm (2-1/8")	95mm (3-3/4")	146mm (5-3/4")

Revision	By	Approved	Date
ORIGINAL		Kercheval	12/75
Add Metric		T. Stanton	03/03

SAN DIEGO REGIONAL STANDARD DRAWING

CORRUGATED STEEL PIPE INLETS DETAILS

RECOMMENDED BY THE SAN DIEGO REGIONAL STANDARDS COMMITTEE

T. Stanton 3/01/2003

Chairperson R.C.E. 19246 Date

DRAWING NUMBER D-17A

This drawing is NOT in conformance with latest UBC and should be used with care and judgment.

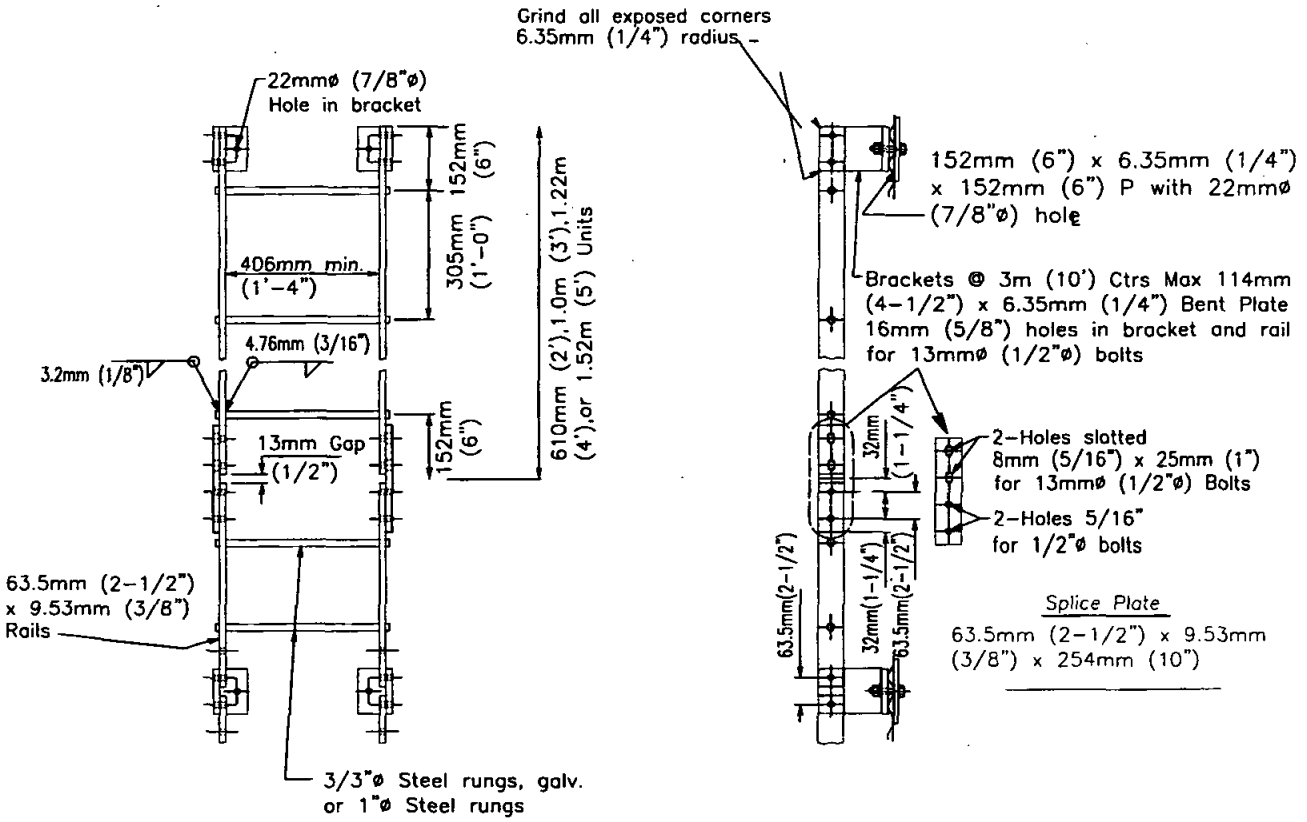

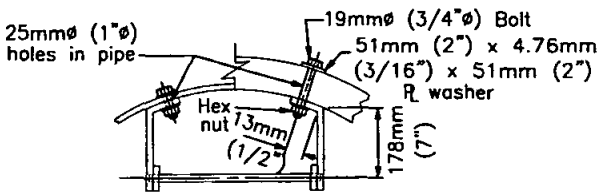

LADDER DETAIL

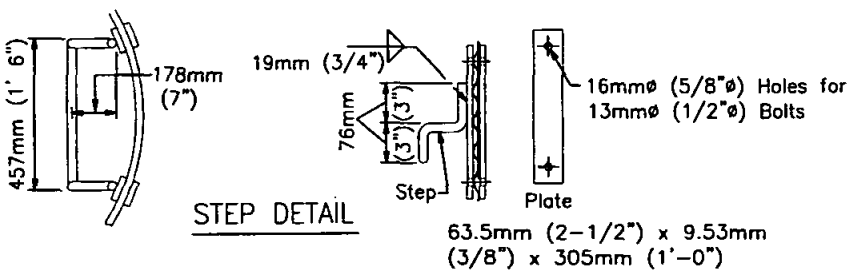

STEP DETAIL

Revision	By	Approved	Date
ORIGINAL		Kercheval	12/75
Add Metric		T. Stanton	03/03

SAN DIEGO REGIONAL STANDARD DRAWING

CORRUGATED STEEL PIPE INLETS
DETAILS

RECOMMENDED BY THE SAN DIEGO REGIONAL STANDARDS COMMITTEE

T. Stanton 3/10/2003

Chairperson R.C.E. 19246 Date

DRAWING NUMBER D-17B

This drawing is NOT in conformance with latest UBC and should be used with care and judgment.

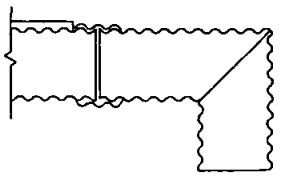

ELBOW

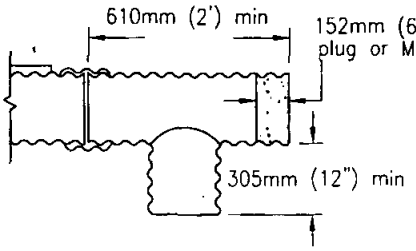

TEE

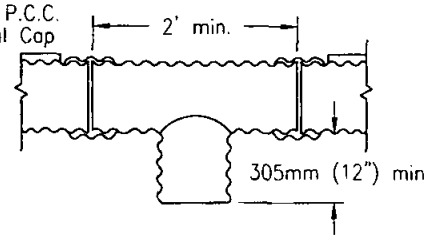

TEE-SAG CONDITION

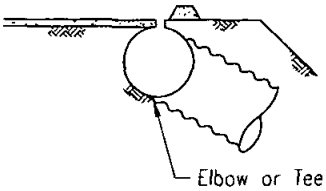

OVERSIDE DRAIN

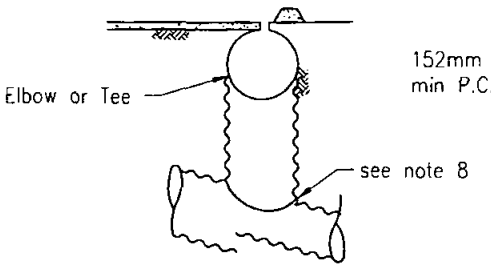

RISER

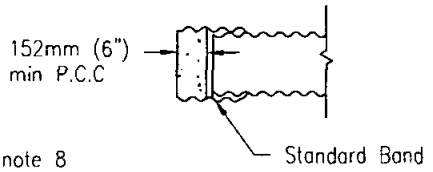

BAND PLUG

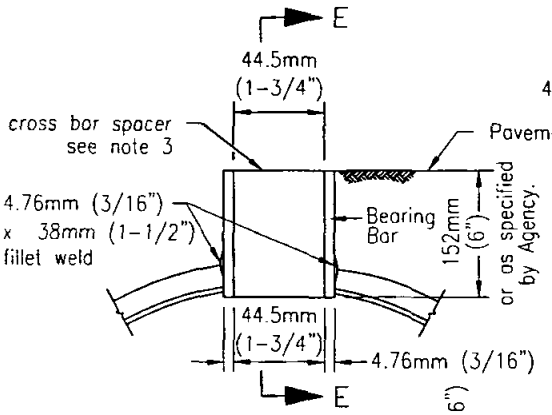

SECTION D-D

GRATE SLOT DETAIL

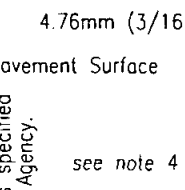

SECTION E-E

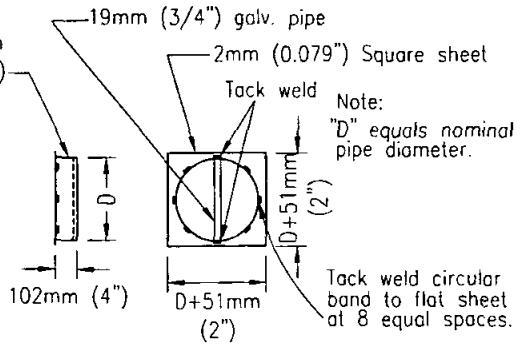

METAL CAP DETAIL

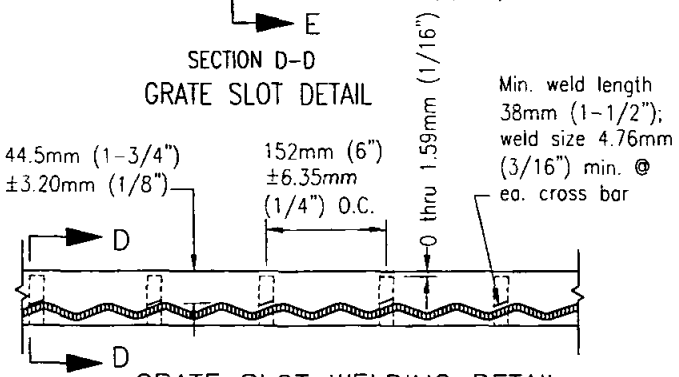

GRATE SLOT WELDING DETAIL

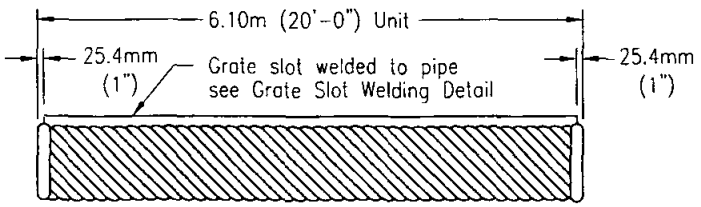

GRATE SLOT DRAIN

NOTES

1. Drain seams may be riveted or resistance spotwelded at equal centers, continuous helical lock seam or helical welded seam.
2. Each drain section shall be assembled with standard coupling bands.
3. Cross bar spacer of grate shall be pressure fusion or plug welded to bearing bars in such a manner as to develop the strength of the cross bar spacer.
4. Cross bar spacer (Section E-E) may differ from that shown provided section area is equal or greater.
5. Grate material shall be a weldable grade of steel complying to the requirements of ASTM A 36.
6. The maximum variance from a straight line from the extreme top corners of the bearing bar shall be 13mm (1/2") in 6.1m (20 feet).
7. Installation lengths shall be 3m (10') or multiples thereof.
8. Either field joint sealed with a pliable mixture of sand, portland cement and emulsified asphalt (Mixture of 1 part portland cement, 3 - 5 parts sand and 1-1/2 parts SSI emulsified asphalt), or continuous weld.

Revision	By	Approved	Date
ORIGINAL		Kercheval	12/75
Add Metric		T. Stanton	03/03

SAN DIEGO REGIONAL STANDARD DRAWING

SLOTTED CORRUGATED STEEL PIPE DRAIN 12" THROUGH 24"

RECOMMENDED BY THE SAN DIEGO REGIONAL STANDARDS COMMITTEE

T. Stanton 3/10/2003

Chairperson R.C.E. 19246 Date

DRAWING NUMBER D-18

This drawing is NOT in conformance with latest UBC and should be used with care and judgment.

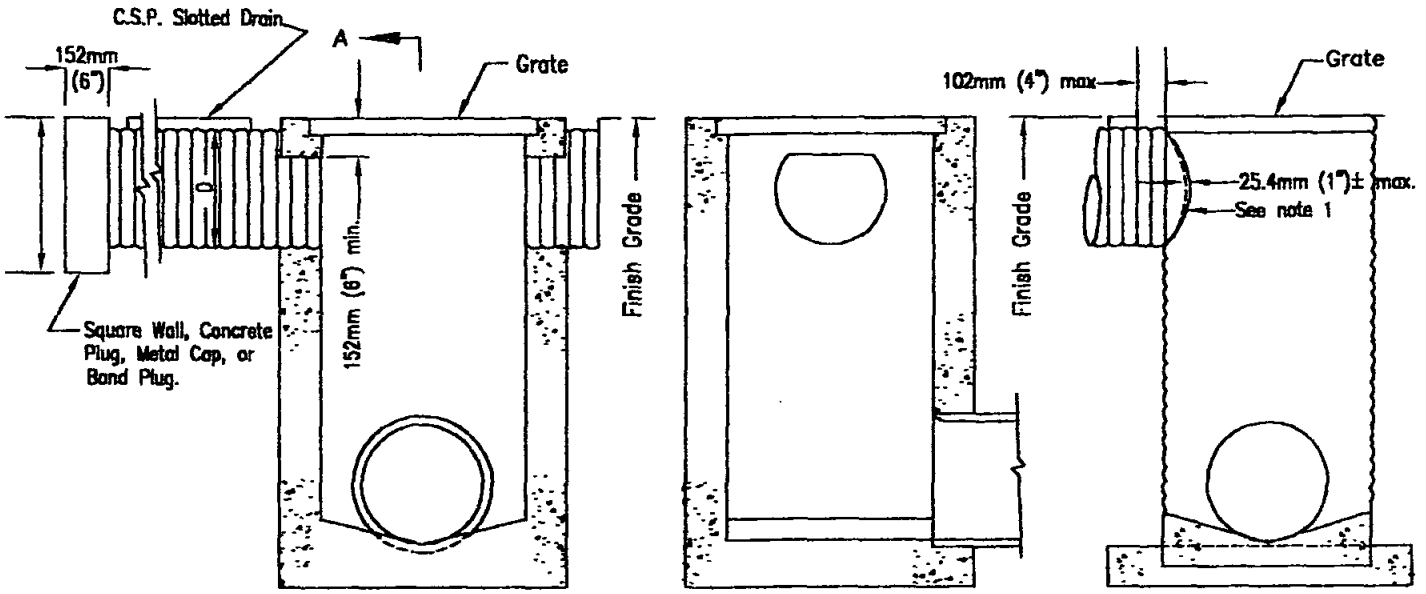

A

SECTION A–A

C.S.P. INLET

CATCH BASIN

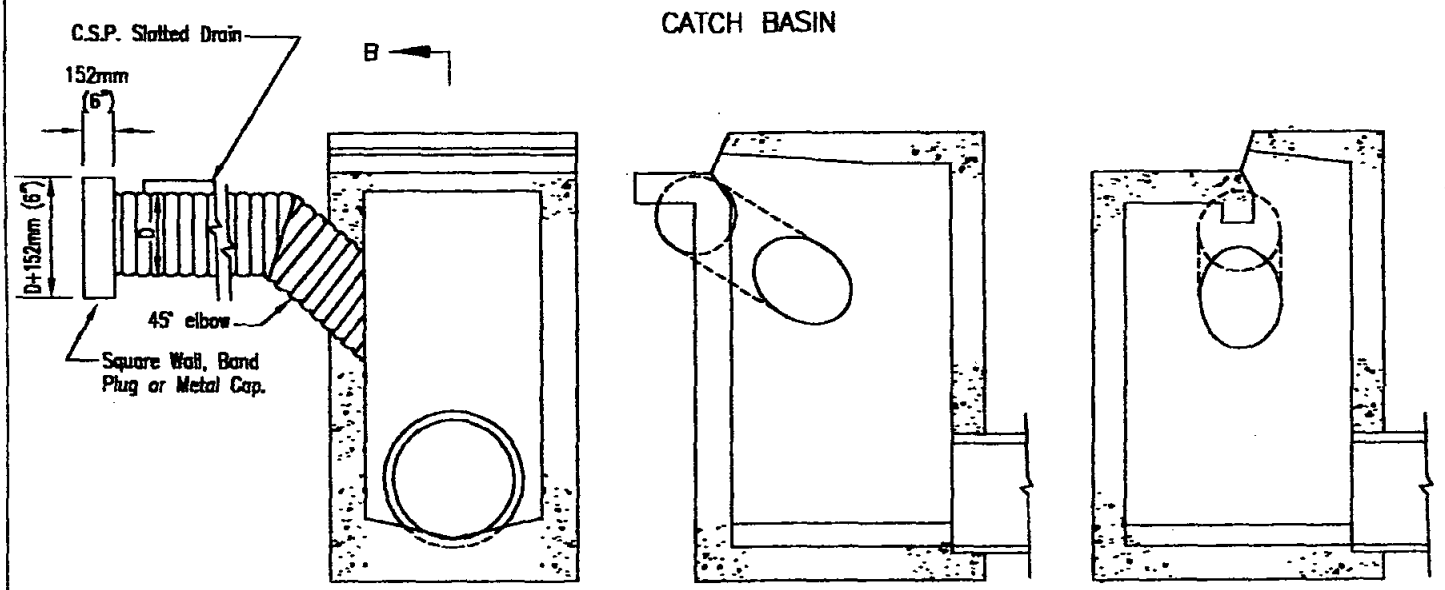

B

SECTION B–B

ALTERNATE SECTION B–B

INLETS

NOTES

1. Either field joint with a pliable mixture of sand, portland cement emulsified asphalt (mixture of 1 part portland cement, 3–5 parts sand, and 1–1/2 parts SSI emulsified asphalt), or continuous weld.

2. See Standard Drawing D–18 for additional notes and details.

Revision	By	Approved	Date
ORIGINAL		Kercheval	12/75
Add Metric		T. Stanton	03/03

SAN DIEGO REGIONAL STANDARD DRAWING

SLOTTED DRAIN CONNECTIONS TO STANDARD INLETS

RECOMMENDED BY THE SAN DIEGO REGIONAL STANDARDS COMMITTEE

T. Stanton 3/10/2003

Chairperson R.C.E. 19246 Date

DRAWING NUMBER D–19

This drawing is NOT in conformance with latest UBC and should be used with care and judgment.

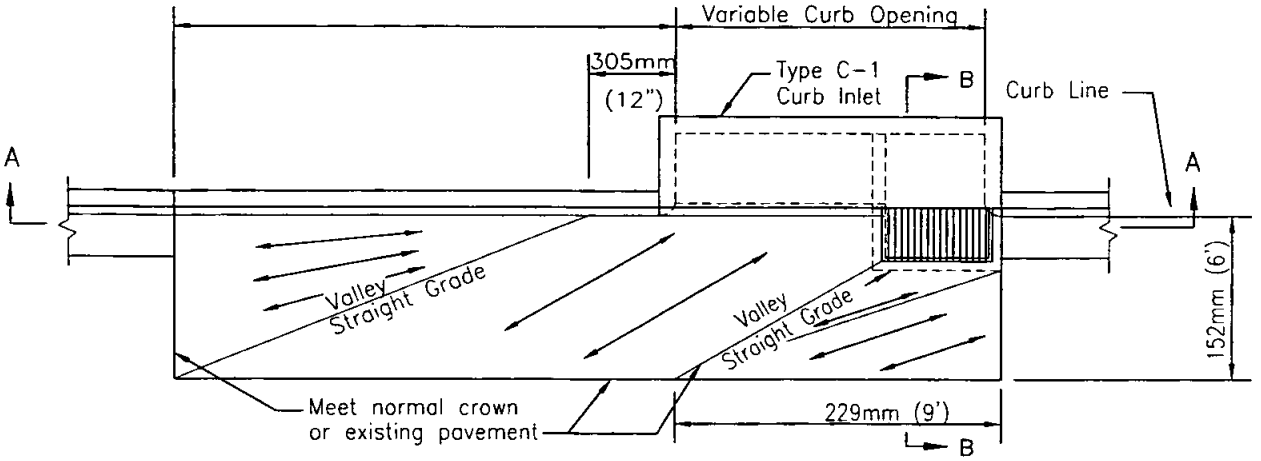

PLAN

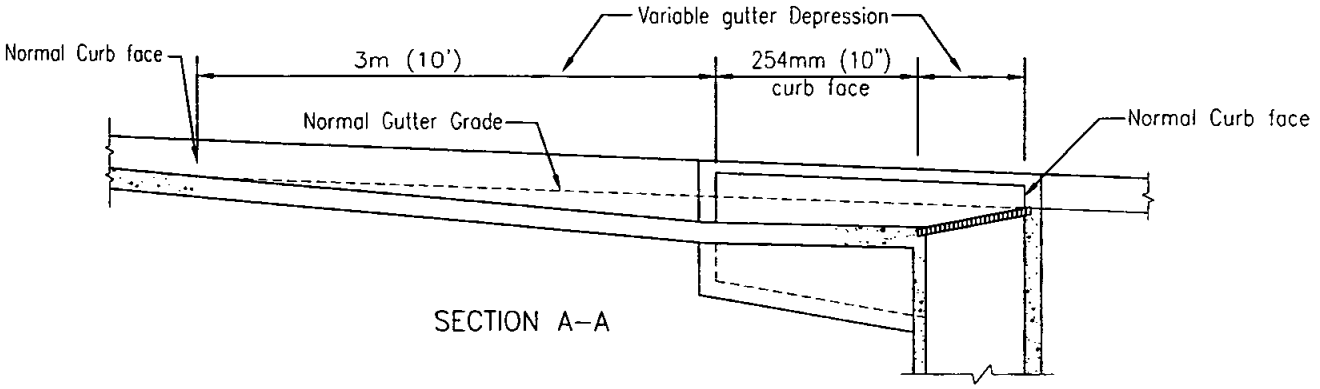

SECTION A–A

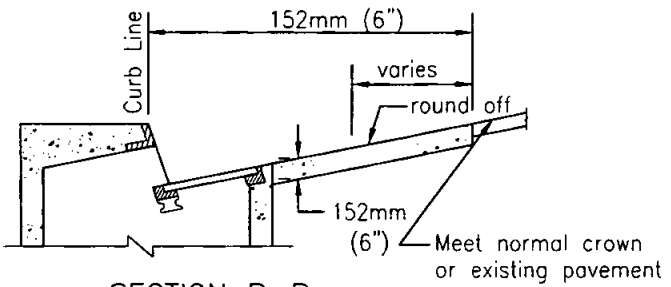

SECTION B–B

NOTES

1. Curb and apron to be placed monolithically.
2. Use of false header at valleys and slope break line is optional.
3. Extend vertical steel from inlet structure into concrete apron as required.
4. Screed Direction ⟵⟶
5. Concrete shall be 308kg/M^3–C–17 Mpa (520–C–2500)

LEGEND ON PLANS

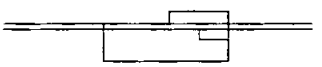

Revision	By	Approved	Date
ORIGINAL		Kercheval	12/75
Add Metric		T. Stanton	03/03

SAN DIEGO REGIONAL STANDARD DRAWING

CONCRETE APRON FOR CURB INLET

RECOMMENDED BY THE SAN DIEGO REGIONAL STANDARDS COMMITTEE

T. Stanton 3/10/2003

Chairperson R.C.E. 19246 Date

DRAWING NUMBER D-20

This drawing is NOT in conformance with latest UBC and should be used with care and judgment.

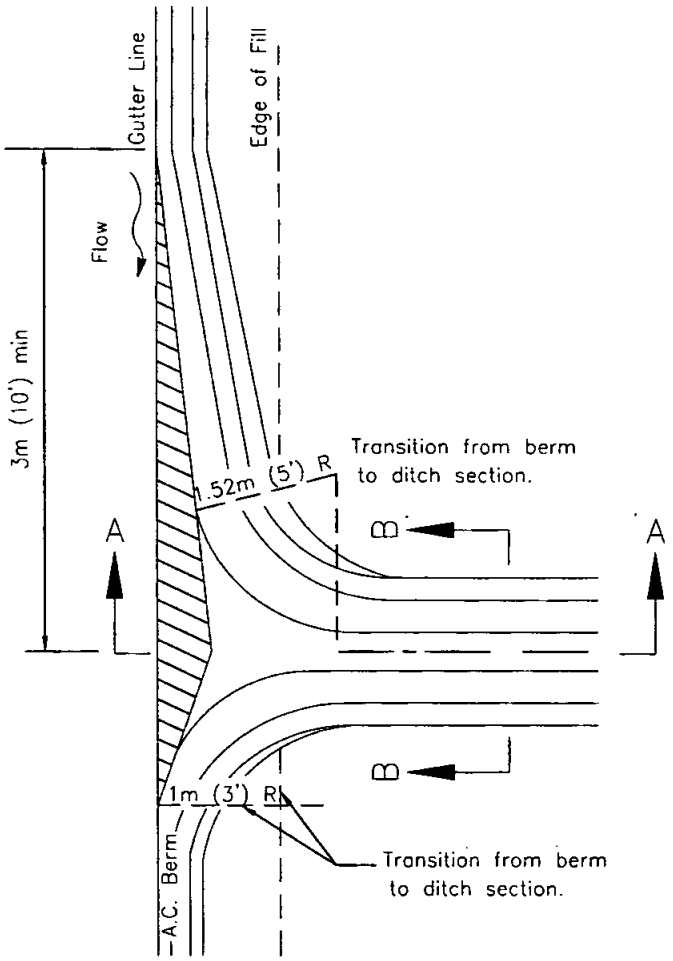

PLAN

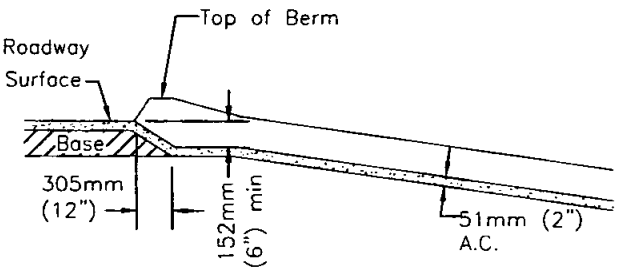

SECTION A–A

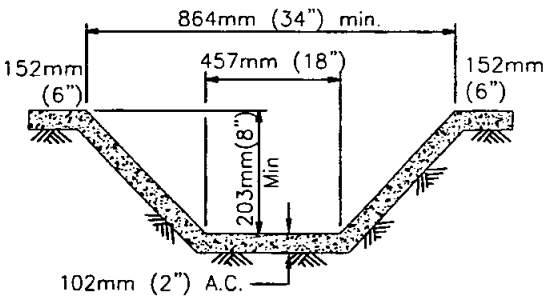

NOTE

1. Cross sectional area of ditch may be round or trapezoidal.

SECTION B–B

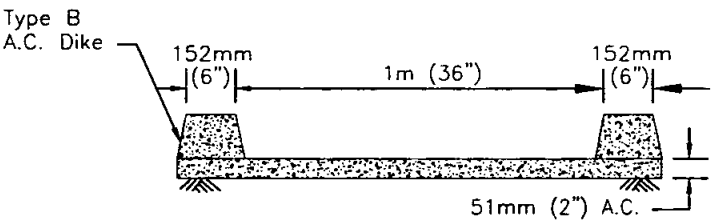

ALTERNATE SECTION B–B

NOTE

1. A.C. spillway may be used when fill is 3m (10') or less, and where fill slope 1–1/2:1 or flatter.
2. Use 3m (10') min. length of gutter transition on each side of downdrain in sag condition.

LEGEND ON PLANS

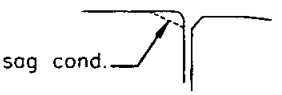

Revision	By	Approved	Date
ORIGINAL		Kercheval	12/75
Add Metric		T. Stanton	03/03

SAN DIEGO REGIONAL STANDARD DRAWING

ASPHALT CONCRETE SPILLWAY

RECOMMENDED BY THE SAN DIEGO REGIONAL STANDARDS COMMITTEE

T. Stanton 3/10/2003

Chairperson R.C.E. 19246 Date

DRAWING NUMBER D-22

This drawing is NOT in conformance with latest UBC and should be used with care and judgment.

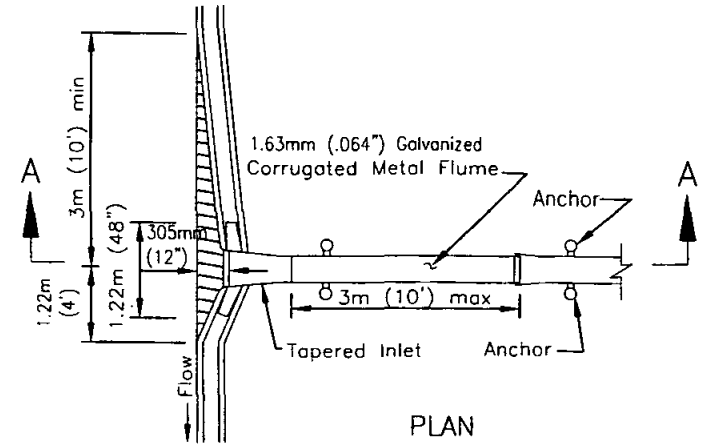

PLAN

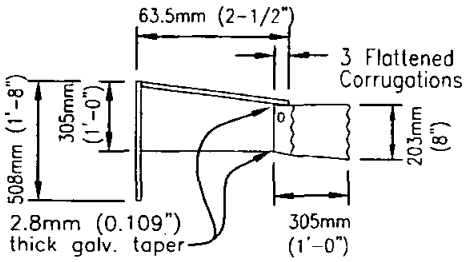

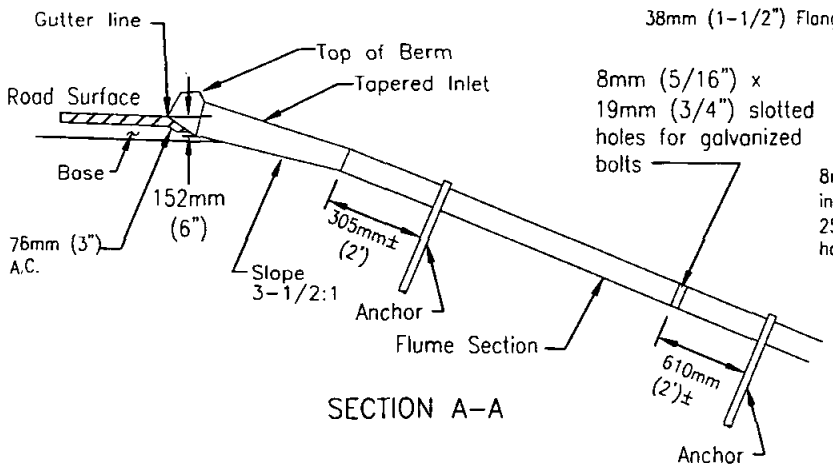

SECTION A–A

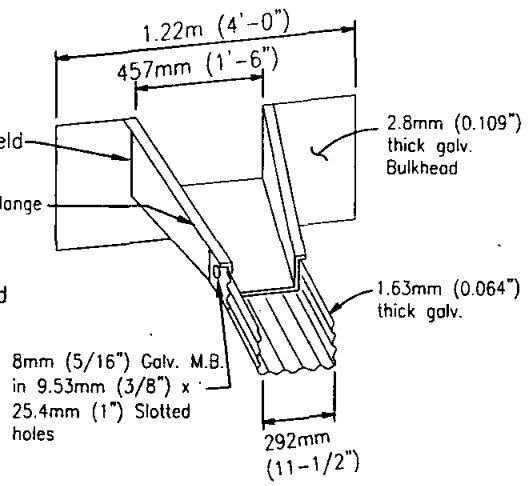

TAPERED INLET

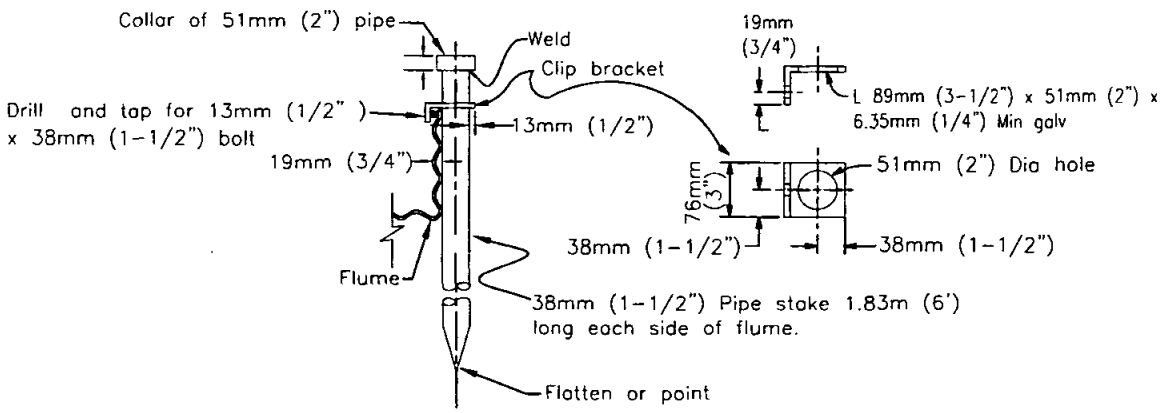

ANCHOR–DETAIL

NOTES

1. Downdrain flume may be used where fill slope is 1 1/2:1 or flatter.
2. Use 3m (10') min. length of gutter transition on each side of downdrain in sag condition.
3. All metal parts to be galvanized after fabrication.

LEGEND ON PLANS

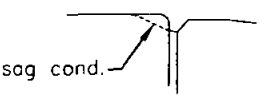

Revision	By	Approved	Date
ORIGINAL		Kercheval	12/75
Add Metric		T. Stanton	03/03

SAN DIEGO REGIONAL STANDARD DRAWING

TAPERED INLET AND DOWNDRAIN FLUME

RECOMMENDED BY THE SAN DIEGO REGIONAL STANDARDS COMMITTEE

T. Stanton 3/10/2003

Chairperson R.C.E. 19246 Date

DRAWING NUMBER D-23

This drawing is NOT in conformance with latest UBC and should be used with care and judgment.

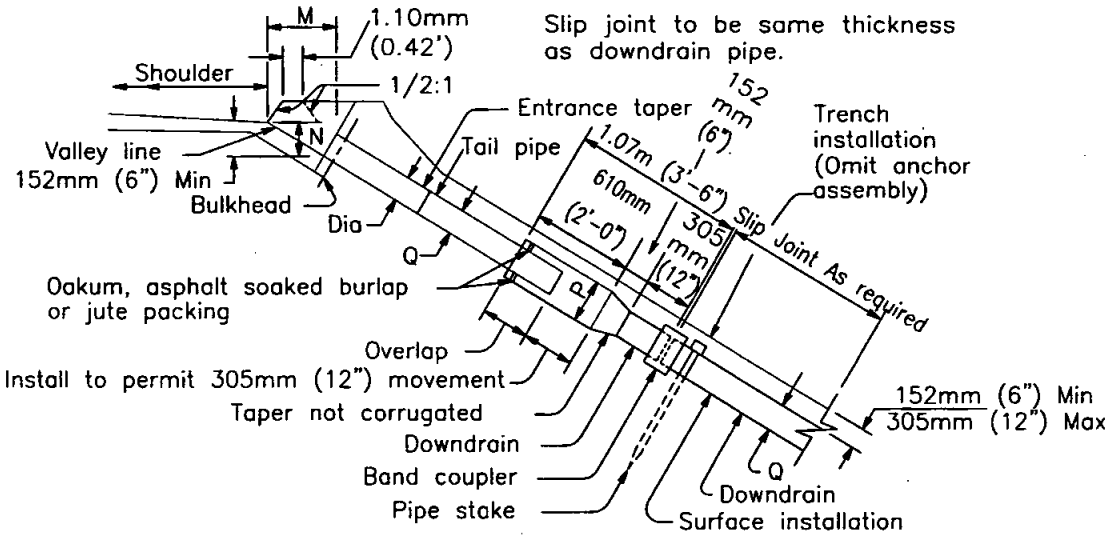

SECTION A–A

CMP dimensions as tabulated below

P	254mm (10")	381mm (15")	457mm (18")	533mm (21")	686mm (27")
Q	203mm (8")	305mm (12")	381mm (15")	457mm (18")	610mm (24")

DIA	MIN L	M	N
203mm (8")	3.0 m (10')	457mm (18")	203mm (8")
305mm (12")	4.57m (15')	508mm (20")	305mm (12")
381mm (15")	7.62m (25')	610mm (24")	381mm (15")
457mm (18")	9.14m (30')	762mm (30")	406mm (16")
610mm (24")	12.2m (40')	914mm (36")	457mm (18")

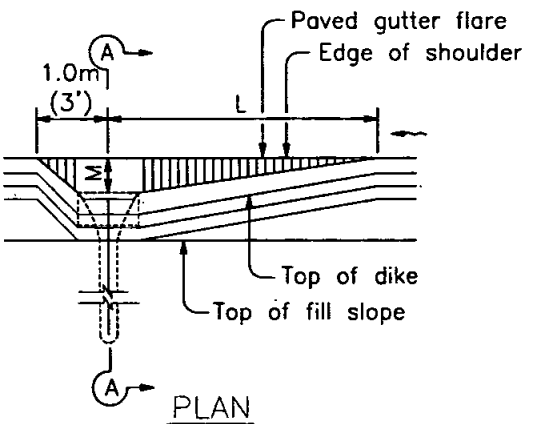

PLAN

NOTES

1. Cable, slip joint or anchor assembly to be placed when specified.

2. Slip joint to be omitted when completely buried.

Revision	By	Approved	Date
ORIGINAL		Kercheval	12/75
Add Metric			11/02

SAN DIEGO REGIONAL STANDARD DRAWING

ENTRANCE TAPER AND DOWNDRAIN PIPE

RECOMMENDED BY THE SAN DIEGO REGIONAL STANDARDS COMMITTEE

3/01/2003

Chairperson R.C.E. 19246 Date

DRAWING NUMBER D-24A

This drawing is NOT in conformance with latest UBC and should be used with care and judgment.

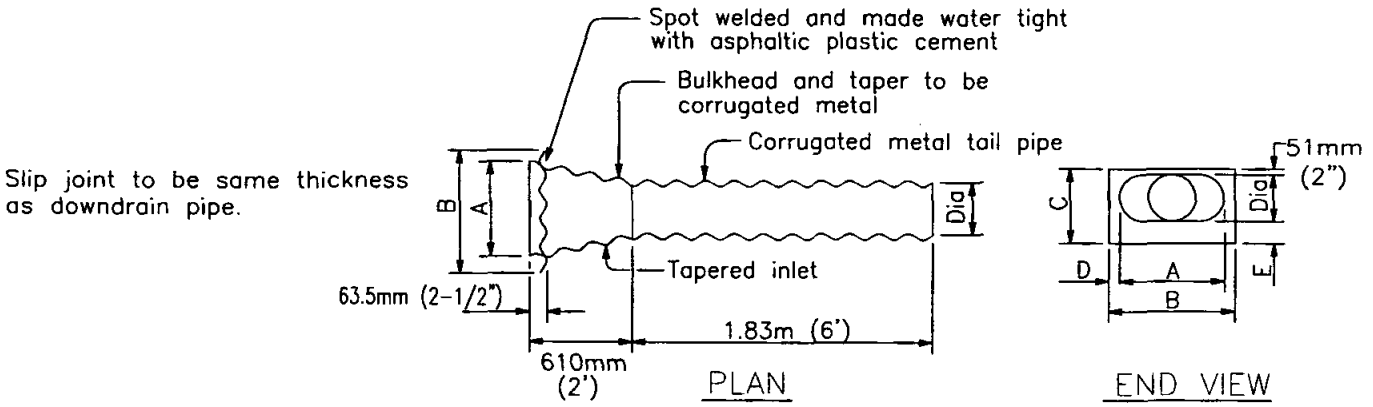

Bulkhead and taper of same thickness as tail pipe with 0.079" max.
Tail pipe of same thickness as downdrain pipe.

ENTRANCE TAPER
ALTERNATIVE A

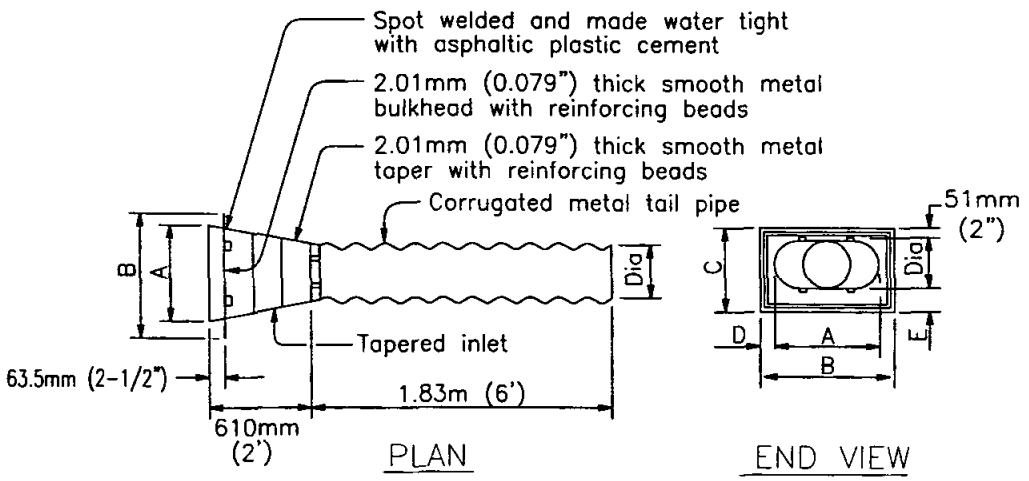

Tail pipe of same thickness as downdrain pipe.

ENTRANCE TAPER
ALTERNATIVE B

Revision	By	Approved	Date	SAN DIEGO REGIONAL STANDARD DRAWING	RECOMMENDED BY THE SAN DIEGO REGIONAL STANDARDS COMMITTEE
ORIGINAL		Kercheval	12/75		3/01/2003
Add Metric			11/02	ENTRANCE TAPER AND DOWNDRAIN PIPE	Chairperson R.C.E. 19246 Date
					DRAWING NUMBER D-24B

This drawing is NOT in conformance with latest UBC and should be used with care and judgment.

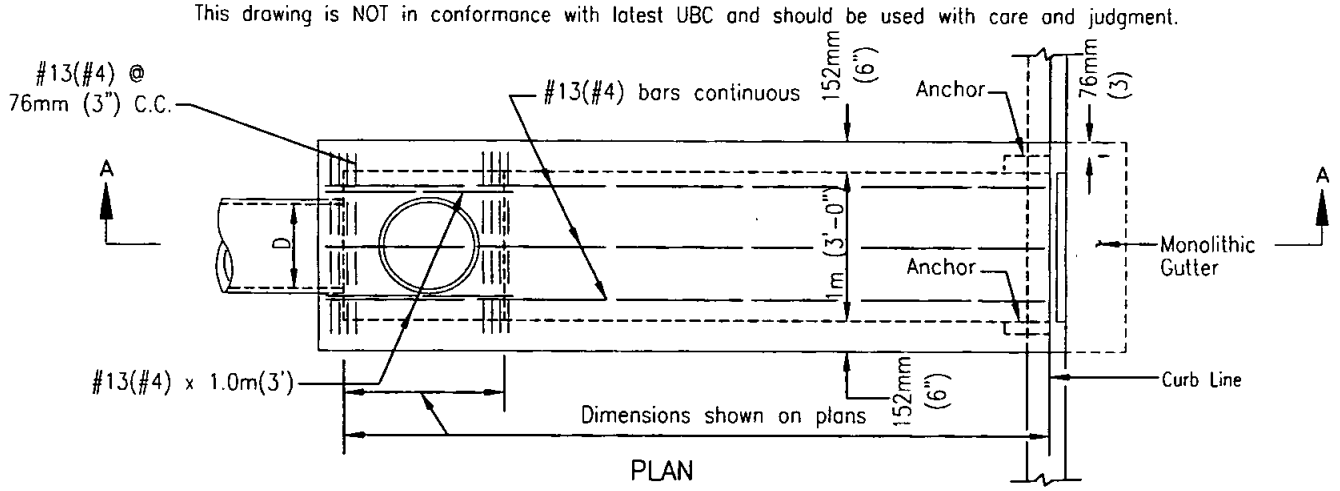

PLAN

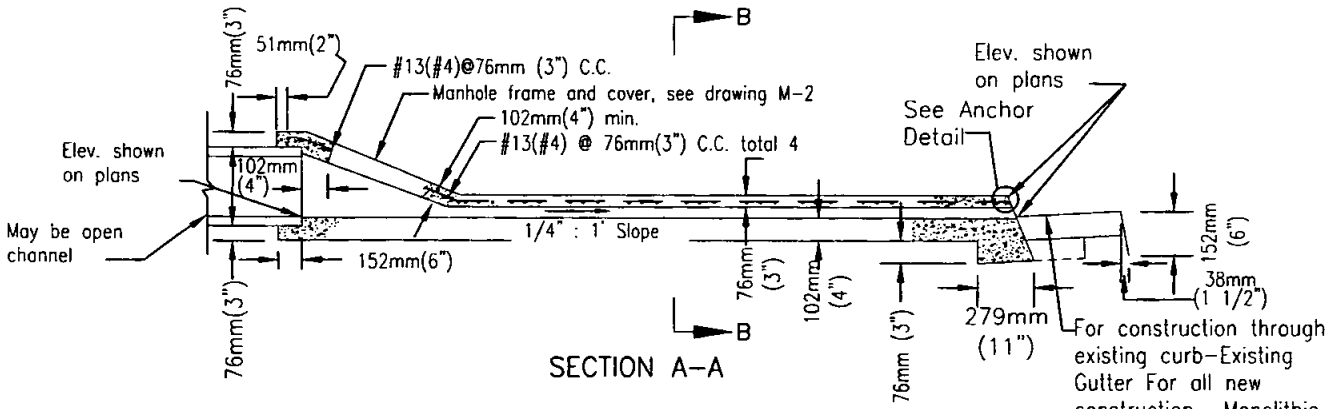

SECTION A–A

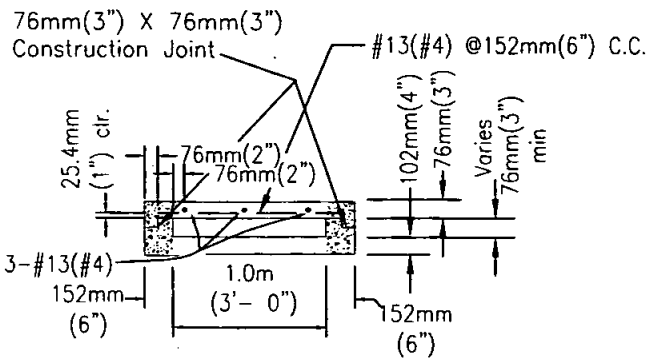

SECTION B–B

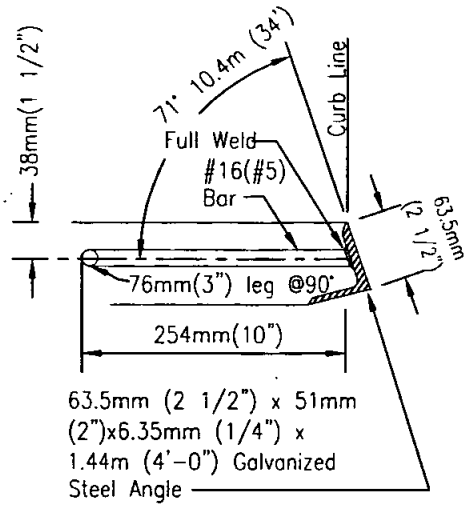

ANCHOR DETAIL

NOTES

1. Concrete shall be 332 kg/M^3-C-22Mpa (560-C-3250)
2. D=inside diameter of pipe or depth of channel.
3. Section to be sloped laterally with top conforming to the grades of the existing sidewalk and curb.
4. Manhole frame and cover may be deleted with open channel.
5. Trowel finish top surface and reproduce markings of existing sidewalk and curb.
6. Trowel finish floor of outlet.

LEGEND ON PLANS

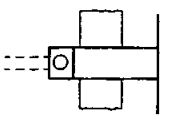

Revision	By	Approved	Date
ORIGINAL		Kercheval	12/75
Add Metric			11/02

SAN DIEGO REGIONAL STANDARD DRAWING

CURB OUTLET - TYPE A

RECOMMENDED BY THE SAN DIEGO REGIONAL STANDARDS COMMITTEE

3/01/2003

Chairperson R.C.E. 19246 Date

DRAWING NUMBER D-25

This drawing is NOT in conformance with latest UBC and should be used with care and judgment.

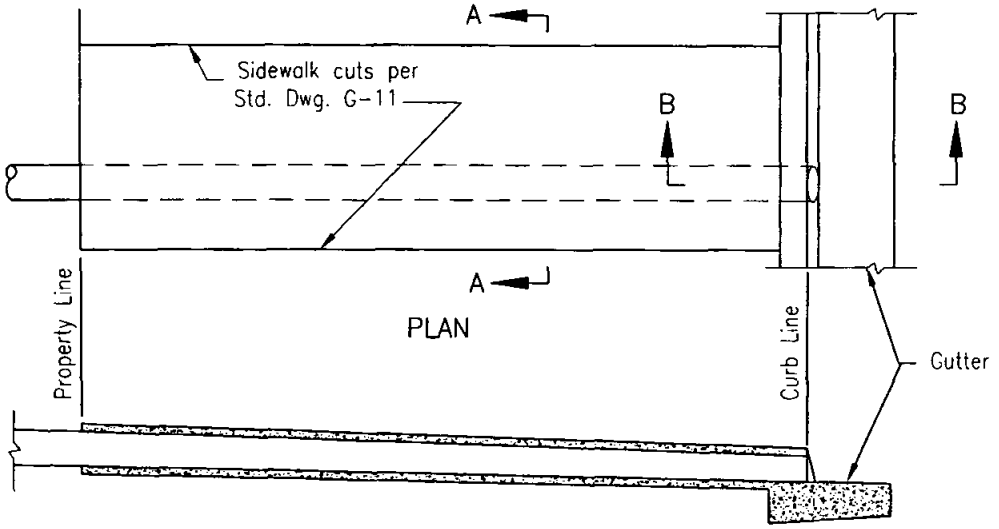

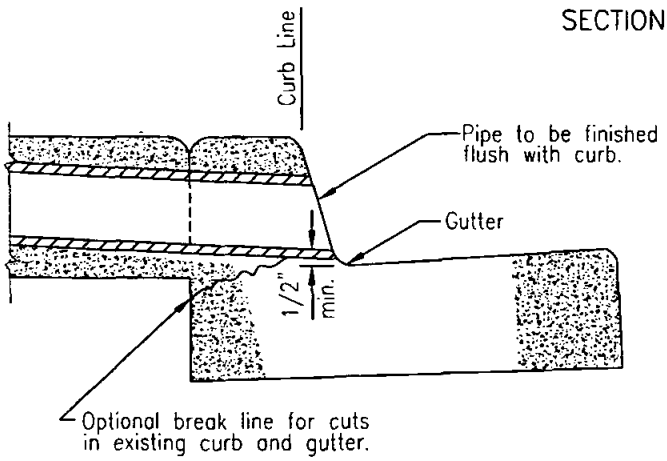

SECTION B-B

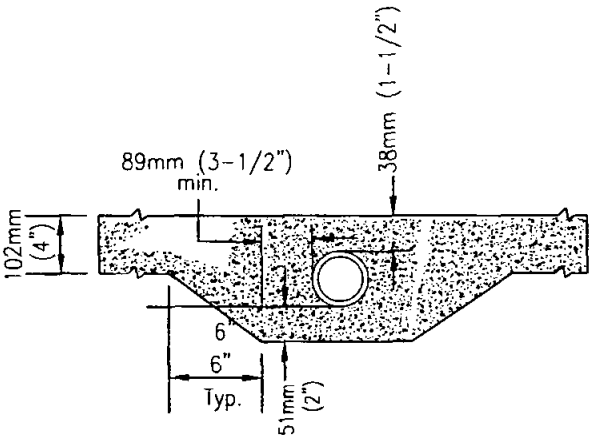

SECTION A-A

APPROVED DRAIN PIPE SIZES	
76mm (3")	152mm (6") to 203mm (8") CURB FACE
102mm (4")	203mm (8") CURB FACE
152mm (6")	254mm (10") CURB FACE

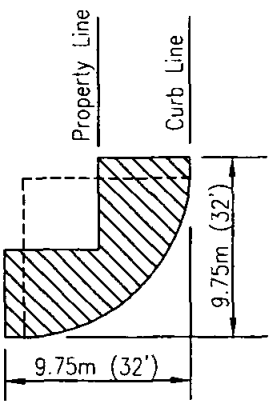

Drain shall not occupy
the hatched area

BLOCK CORNER

NOTES

1. Pipe shall be one continuous length from property line to curb line.
2. Multiple pipes to be set a minimum distance of D/2 apart.
3. Concrete shall be 308kg/M^3 -C-17 Mpa (520-C-2500)
4. Pipe shall be circular asbestos cement, cast iron or rigid plastic.

Revision	By	Approved	Date
ORIGINAL		Kercheval	12/75
Add Metric			11/02

SAN DIEGO REGIONAL STANDARD DRAWING

SIDEWALK UNDERDRAIN PIPE

RECOMMENDED BY THE SAN DIEGO REGIONAL STANDARDS COMMITTEE

3/01/2003

Chairperson R.C.E. 19246 Date

DRAWING NUMBER D-27

This drawing is NOT in conformance with latest UBC and should be used with care and judgment.

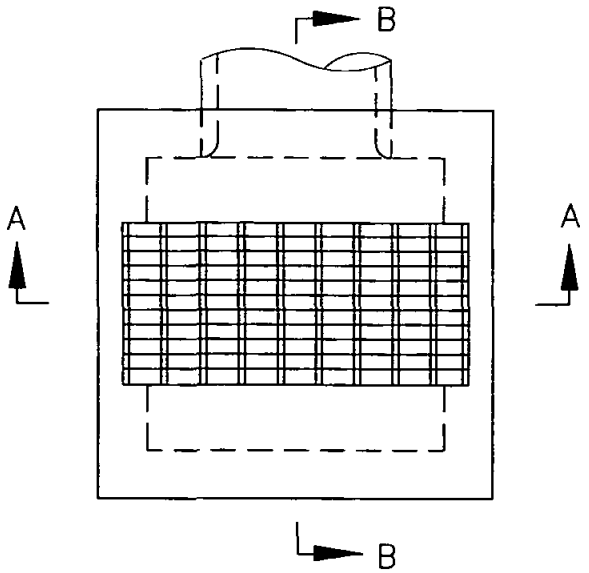

PLAN

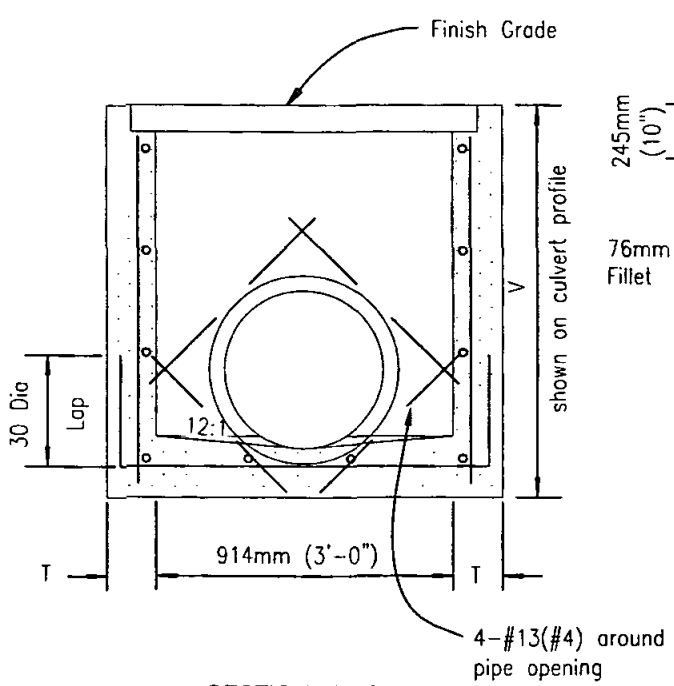

SECTION A-A

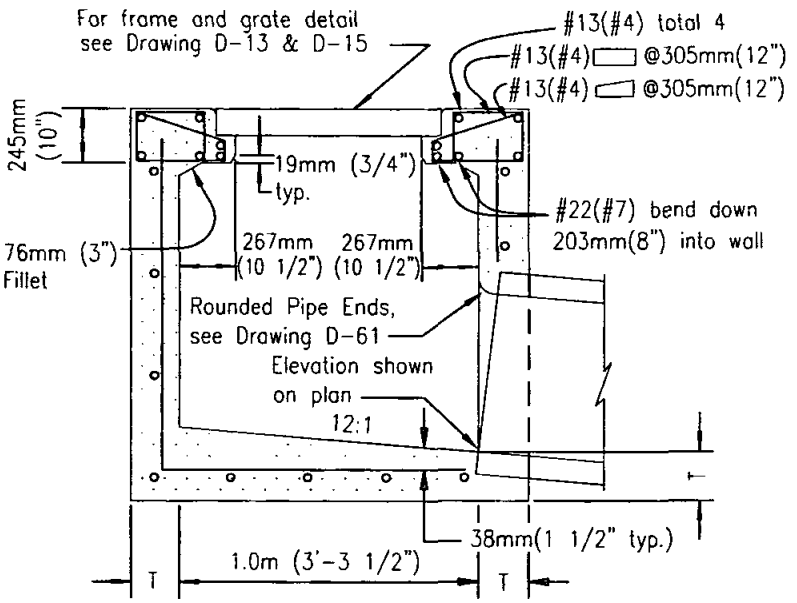

SECTION B-B

NOTES

1. See Standard Drawing D-11 for additional notes and details.
2. When "V" exceeds 4', steps shall be installed

LEGEND ON PLANS

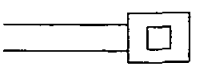

Revision	By	Approved	Date
ORIGINAL		Solomon	7/79
Add Metric		T. Stanton	03/03

SAN DIEGO REGIONAL STANDARD DRAWING

CATCH BASIN - TYPE I

RECOMMENDED BY THE SAN DIEGO REGIONAL STANDARDS COMMITTEE

T. Stanton 3/01/2003

Chairperson R.C.E. 19246 Date

DRAWING NUMBER D-29

This drawing is NOT in conformance with latest UBC and should be used with care and judgment.

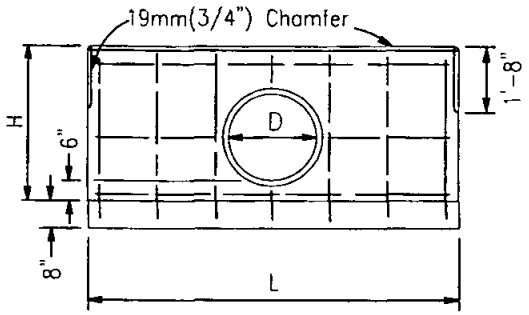

FRONT ELEVATION
SINGLE HEADWALL

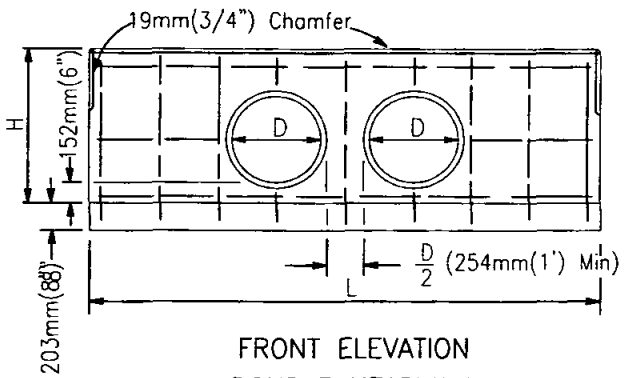

FRONT ELEVATION
DOUBLE HEADWALL

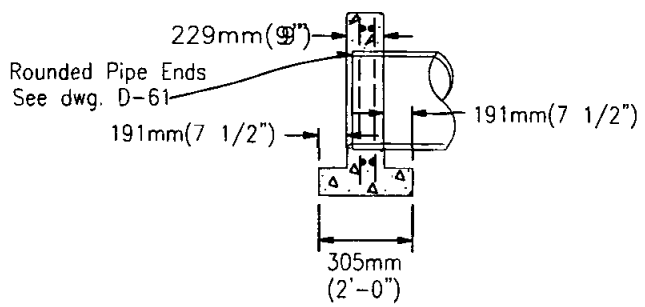

SECTION, SINGLE &
DOUBLE HEADWALLS

D	H	SINGLE						DOUBLE					
		L	Steel		Concrete			L	Steel		Concrete		
			kg	Lbs.	cu m	C.Y.			kg	Lbs.	cu m	C.Y.	
305mm(12")	813mm(2'-8")	1.52m	(5'-0")	15.9	(35)	0.46	(0.60)	2.44m	(8'-0")	22.7	(50)	0.72	(0.94)
381mm(15")	889mm(2'-11")	1.83m	(6'-0")	18.1	(40)	0.57	(0.75)	2.90m	(9'-6")	27.2	(60)	0.89	(1.17)
457mm(18")	965mm(3'-2")	2.13m	(7'-0")	22.7	(50)	0.70	(0.91)	3.20m	(10'-6")	34.0	(75)	1.03	(1.35)
533mm(21")	1.04m (3'-5")	2.29m	(7'-6")	27.2	(60)	0.78	(1.02)	3.51m	(11'-6")	40.8	(90)	1.16	(1.52)
610mm(24")	1.12m (3'-8")	2.59m	(8'-6")	34.0	(75)	0.92	(1.20)	3.81m	(12'-6")	45.4	(100)	1.32	(1.72)
686mm(27")	1.19m (3'-11")	2.90m	(9'-6")	38.6	(85)	1.06	(1.39)	4.27m	(14'-0")	52.2	(115)	1.53	(2.00)
762mm(30")	1.27m (4'-2")	3.05m	(10'-0")	38.6	(85)	1.16	(1.52)	4.57m	(15'-0")	57.2	(126)	1.69	(2.21)
838mm(33")	1.35m (4'-5")	3.35m	(11'-0")	45.4	(100)	1.32	(1.73)	4.88m	(16'-0")	59.0	(130)	1.85	(2.42)
914mm(36")	1.42m (4'-8")	3.65m	(12'-0")	47.6	(105)	1.49	(1.95)	5.18m	(17'-0")	65.8	(145)	2.03	(2.65)
991mm(39")	1.50m (4'-11")	3.81m	(12'-6")	59.0	(130)	1.60	(2.09)	5.49m	(18'-0")	77.1	(170)	2.20	(2.88)
1.02m (42")	1.57m (5'-2")	4.11m	(13'-6")	63.5	(140)	1.79	(2.34)	5.79m	(19'-0")	84.0	(185)	2.39	(3.13)
1.14m (45")	1.65m (5'-5")	4.42m	(14'-6")	68.0	(150)	1.99	(2.60)	6.10m	(20'-0")	88.5	(195)	2.58	(3.38)
1.22m (48")	1.73m (5'-8")	4.57m	(15'-0")	72.6	(160)	2.10	(2.75)	6.40m	(21'-0")	90.7	(200)	2.78	(3.64)
1.30m (51")	1.80m (5'-11")	4.88m	(16'-0")	81.6	(180)	2.32	(3.03)	6.86m	(22'-6")	102	(225)	3.07	(4.02)
1.37m (54")	1.88m (6'-2")	5.18m	(17'-0")	86.2	(190)	2.53	(3.31)	7.16m	(23'-6")	109	(240)	3.29	(4.30)

NOTES

1. Concrete shall be 332 kg/M^3-C-22Mpa (560-C-3250)
2. All reinforcing shall be #13(#4) bars. All vertical and horizontal tie bars @ 457mm(18") maximum spacing.

LEGEND ON PLANS

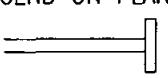

Revision	By	Approved	Date
ORIGINAL		Kercheval	12/75
Add Metric		T. Stanton	03/03

SAN DIEGO REGIONAL STANDARD DRAWING

STRAIGHT HEADWALL - TYPE A
[CIRCULAR PIPE]

RECOMMENDED BY THE SAN DIEGO REGIONAL STANDARDS COMMITTEE

T. Stanton 3/01/2003
Chairperson R.C.E. 19246 Date

DRAWING NUMBER D-30

Revision	By	Approved	Date
ORIGINAL		Kercheval	12/75
Add Metric		T. Stanton	03/03

SAN DIEGO REGIONAL STANDARD DRAWING

STRAIGHT HEADWALL - TYPE A

[C.S.P. -ARCH]

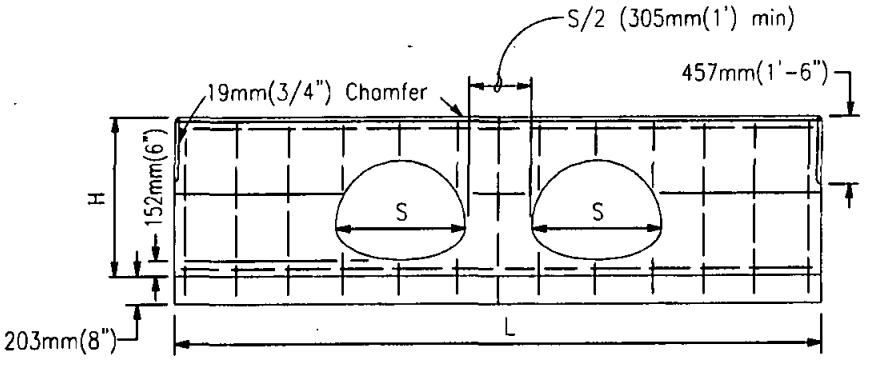

ELEVATION - DOUBLE HEADWALL

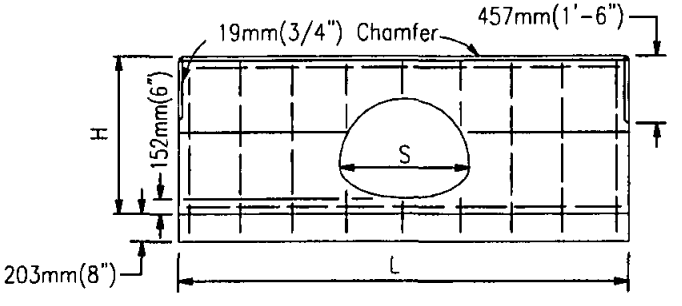

ELEVATION - SINGLE HEADWALL

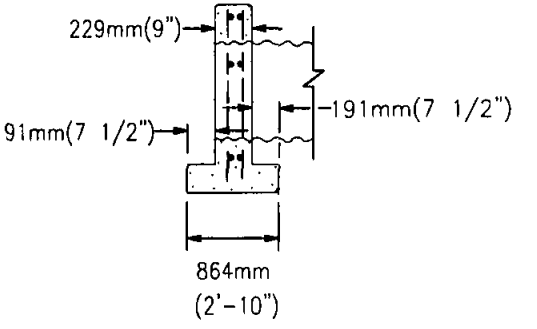

SECTION, SINGLE & DOUBLE HEADWALLS

C.S.P. ARCH SIZE		SINGLE						DOUBLE				
		H		L		Steel	Concrete	L		Steel		Concrete
Metric	(inches)	Metric	(ft/in)	Metric	(ft/in)		cu m C.Y.	Metric	(ft/in)	kg	Lbs.	cu m C.Y.
457mmx279mm	(18x11)	787mm	(2-7)	1.68m	(5-6)	16.8	(37) .490 (0.64)	2.44m	(8'-0")	23.6	(52)	.700 (0.91)
533mmx381mm	(21x15)	889mm	(2-11)	1.98m	(6-6)	20.4	(45) .612 (0.80)	3.05m	(10'-0")	27.2	(60)	.940 (1.22)
610mmx457mm	(24x18)	965mm	(3-2)	2.29m	(7-6)	22.7	(50) .734 (0.96)	3.51m	(11'-6")	31.8	(70)	1.11 (1.45)
711mmx508mm	(28x20)	1.02m	(3-4)	2.59m	(8-6)	27.3	(60) .860 (1.12)	4.12m	(13'-6")	40.9	(90)	1.35 (1.76)
889mmx610mm	(35x24)	1.12m	(3-8)	3.20m	(10-6)	38.6	(85) 1.13 (1.47)	4.72m	(15'-6")	54.5	(120)	1.66 (2.16)
1.07mx737mm	(42x29)	1.24m	(4-1)	3.81m	(12-6)	50.0	(110) 1.34 (1.76)	5.49m	(18'-0")	65.8	(145)	1.97 (2.57)
1.24mx838mm	(49x33)	1.35m	(4-5)	4.42m	(14-6)	59.0	(130) 1.73 (2.26)	6.40m	(21'-0")	77.2	(170)	2.40 (3.13)
1.45mx965mm	(57x38)	1.47m	(4-10)	5.18m	(17-0)	70.4	(155) 2.15 (2.81)	7.47m	(24'-6")	95.3	(210)	2.96 (3.86)
1.63mx1.09m	(64x43)	1.60m	(5-3)	5.79m	(19-0)	79.4	(175) 2.54 (3.31)	8.23m	(27'-0")	104.4	(230)	3.38 (4.42)
1.80m x1.19m	(71x47)	1.70m	(5-7)	6.40m	(21-0)	88.5	(195) 2.92 (3.81)	9.14m	(30'-0")	115.7	(255)	3.90 (5.09)

RECOMMENDED BY THE SAN DIEGO REGIONAL STANDARDS COMMITTEE

Chairperson R.C.E. 19246 Date 3/10/2003

DRAWING NUMBER D-31

This drawing is NOT in conformance with latest UBC and should be used with care and judgment.

This drawing is NOT in conformance with latest UBC and should be used with care and judgment.

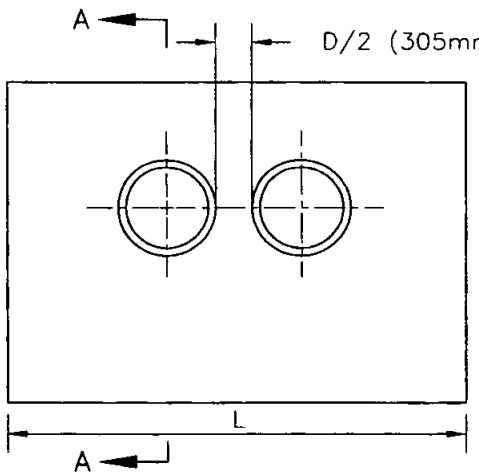

DOUBLE PIPE ELEVATION

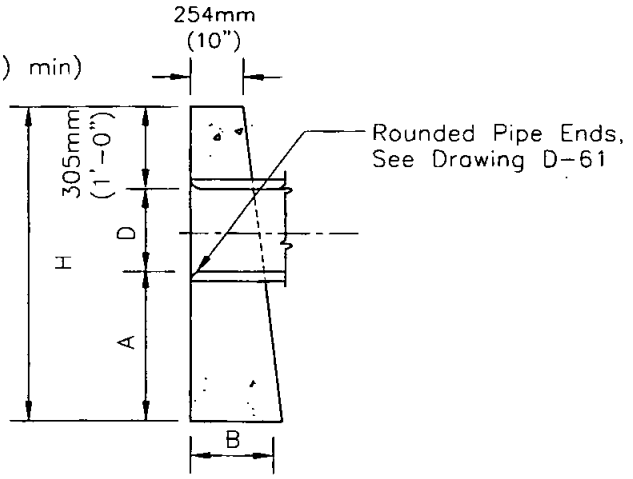

SECTION A–A

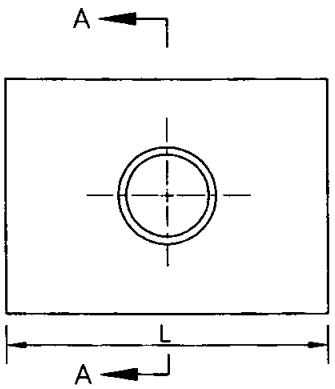

SINGLE PIPE ELEVATION

D		A		B		H		SINGLE				DOUBLE			
								L		Concrete		L		Concrete	
mm	in.	mm	ft./in.	mm	ft./in.	m	ft./in.	m	ft./in.	kg	C.Y.	m	ft./in.	kg	C.Y.
305	(12")	610	(2'-0")	305	(1'-0")	1.22	(4'-0")	1.22	(4'-0")	.345	(0.45)	1.73	(5'-8")	.475	(.62)
381	(15")	610	(2'-0")	330	(1'-1")	1.30	(4'-3")	1.52	(5'-0")	.482	(0.63)	2.16	(7'-1")	.650	(.85)
457	(18")	610	(2'-0")	356	(1'-2")	1.40	(4'-6")	1.83	(6'-0")	.635	(0.83)	2.59	(8'-6")	.860	(1.12)
610	(24")	762	(2'-6")	432	(1'-5")	1.68	(5'-6")	2.44	(8'-0")	1.18	(1.54)	3.45	(11'-4")	1.60	(2.09)
762	(30")	762	(2'-6")	533	(1'-9")	1.83	(6'-0")	3.05	(10'-0")	1.85	(2.41)	4.32	(14'-2")	2.50	(3.26)
914	(36")	914	(3'-0")	610	(2'-0")	2.13	(7'-0")	3.66	(12'-0")	2.86	(3.74)	5.18	(17'-0")	3.87	(5.05)

NOTES

1. Concrete shall be 560-C-3250.
2. Exposed corners shall be chamfered 3/4".

LEGEND ON PLANS

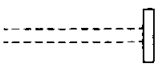

Revision	By	Approved	Date
ORIGINAL		Kercheval	12/75
Add Metric		T. Stanton	03/03

SAN DIEGO REGIONAL STANDARD DRAWING

STRAIGHT HEADWALL - TYPE B
[CIRCULAR PIPE]

RECOMMENDED BY THE SAN DIEGO REGIONAL STANDARDS COMMITTEE

T. Stanton 3/10/2003

Chairperson R.C.E. 19246 Date

DRAWING NUMBER D-32

This drawing is NOT in conformance with latest UBC and should be used with care and judgment.

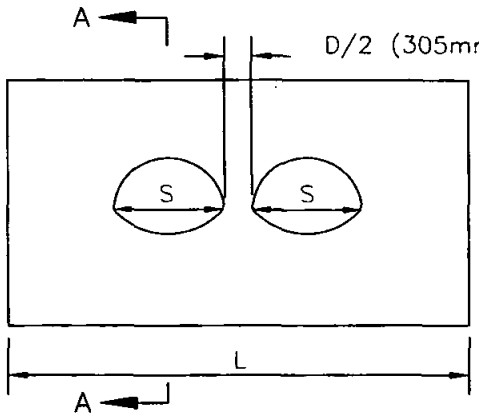

DOUBLE PIPE ELEVATION

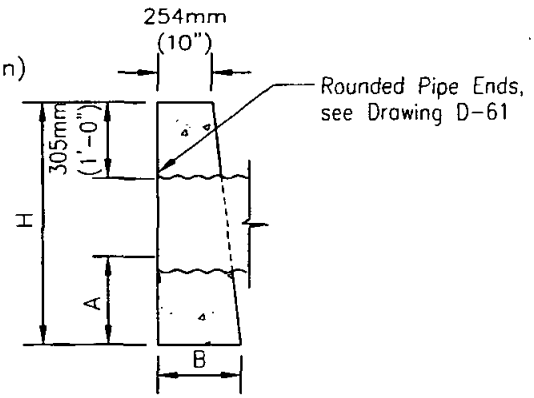

SECTION A-A

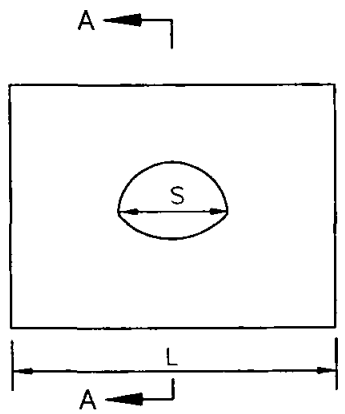

SINGLE PIPE ELEVATION

C.S.P. ARCH SIZE		A		B		H		SINGLE				DOUBLE			
								L		Concrete		L		Concrete	
Metric	(inches)	mm	ft./in.	mm	ft./in.	m	ft./in.	m	ft.	cu m	C.Y.	m	ft./in.	cu m	C.Y.
457mmx279mm	(18x11)	610	(2'-0")	356	(1'-2")	1.19	(3'-11")	1.83	(6')	0.64	(0.83)	2.21	(7'-3")	0.75	(0.97)
533mmx381mm	(21x15)	610	(2'-0")	406	(1'-4")	1.24	(4'-1")	2.13	(7')	0.83	(1.08)	2.95	(9'-8")	1.12	(1.46)
610mmx457mm	(24x18)	610	(2'-0")	457	(1'-6")	1.32	(4'-4")	2.44	(8')	1.08	(1.41)	3.51	(11'-6")	1.52	(1.98)
711mmx508mm	(28x20)	762	(2'-6")	508	(1'-8")	1.52	(5'-0")	2.74	(9')	1.51	(1.97)	3.81	(12'-6")	2.04	(2.66)
889mmx610mm	(35x24)	762	(2'-6")	610	(2'-0")	1.63	(5'-4")	3.05	(10')	1.96	(2.56)	4.37	(14'-5")	2.76	(3.60)

NOTES

1. Concrete shall be 332 kg/M^3-C-22Mpa (560-C-3250).
2. Exposed corners to be chamfered 19mm (3/4").

LEGEND ON PLANS

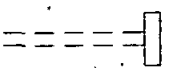

Revision	By	Approved	Date
ORIGINAL		Kercheval	12/75
Add Metric		T. Stanton	03/03

SAN DIEGO REGIONAL STANDARD DRAWING

STRAIGHT HEADWALL - TYPE B
(C.S.P. ARCH)

RECOMMENDED BY THE SAN DIEGO REGIONAL STANDARDS COMMITTEE

T. Stanton 3/10/2003

Chairperson R.C.E. 19246 Date

DRAWING NUMBER D-33

This drawing is NOT in conformance with latest UBC and should be used with care and judgment.

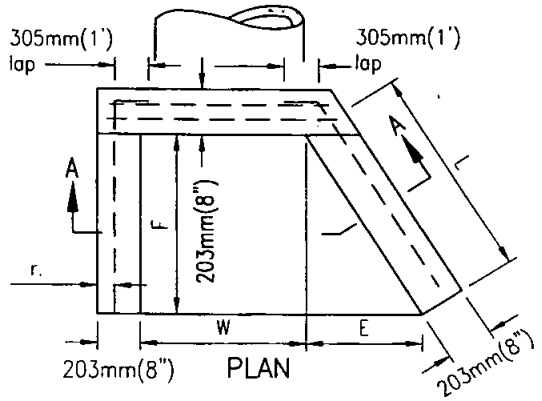

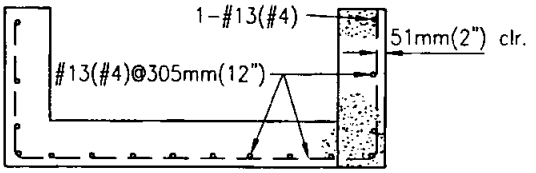

SECTION A–A

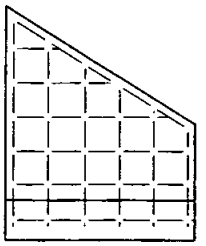

WING WALL REINFORCING

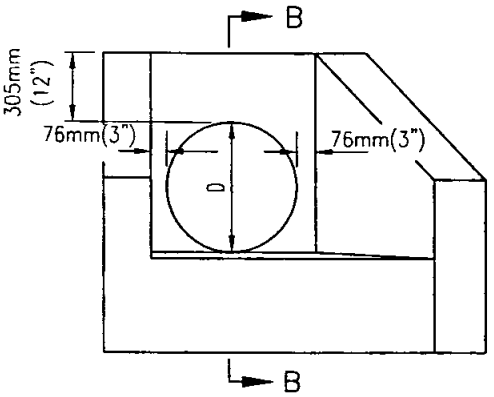

ELEVATION

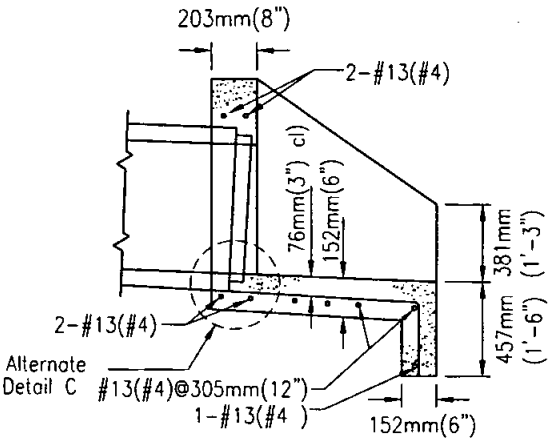

SECTION B–B

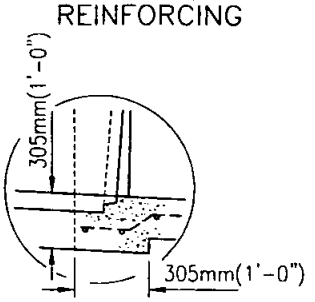

ALT. DETAIL C

	DIA. OF PIPE	DIMENSIONS			DOUBLE PIPE					DOUBLE PIPE				
					W	U TYPE		WING TYPE		W	U TYPE		WING TYPE	
		L	E	F		CONC.	STEEL	CONC.	STEEL		CONC.	STEEL	CONC.	STEEL
Metric	457mm	689mm	381mm	571mm	610mm	0.43kg	16kg	0.49kg	20kg	AS SHOWN ON PLANS	0.63kg	24kg	0.69kg	28kg
US	18"	2'-3 1/8"	1'-3"	1'-10 1/2"	2'-0"	0.55yd	35lb	0.63yd	43lb		0.82yd	53lb	0.90yd	61lb
Metric	610mm	962mm	533mm	800mm	762mm	0.61kg	22kg	0.72kg	28kg		1.0kg	34kg	1.1kg	39kg
US	24"	3'-1 7/8"	1'-9"	2'-7 1/2"	2'-6"	0.79yd	47lb	0.93yd	60lb		1.22yd	73lb	1.36yd	86lb
Metric	762mm	1.24m	686mm	1.03m	914mm	.81kg	33kg	1.0kg	39kg		1.3kg	50kg	1.5kg	56kg
US	30"	4'-0 5/8"	2'-3"	3'-4 1/2"	3'-0"	1.05yd	71lb	1.29yd	85lb		1.66yd	109lb	1.92yd	123lb
Metric	914mm	1.51m	838mm	1.26m	1.07m	1.02kg	40kg	1.30kg	52kg		1.70kg	62kg	1.95kg	74kg
US	36"	4'-11 1/2"	2'-9"	4'-1 1/2"	3'-6"	1.33yd	88lb	1.69yd	114lb		2.19yd	136lb	2.55yd	162lb

NOTES:

1. Concrete shall be 332kg/M^3 -C-22Mpa (560-C-3250)
2. Exposed corners to be chamfered 3/4".
3. Multiple pipes to be set a distance of D/2, with a 305mm(1') minimum between outside diameters of pipes.
4. Top of headwall shall be placed approximately parallel to profile grade when the grade is 3% or more.
5. Skewed pipes: Dimension W to be increased in width or length due to skew or multiple pipes.
6. For pipe wall thickness greater than 76mm(3") use alternate Detail-C.

LEGEND ON PLANS

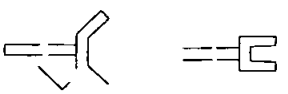

Revision	By	Approved	Date
ORIGINAL		Kercheval	12/75
Add Metric		T. Stanton	03/03

SAN DIEGO REGIONAL STANDARD DRAWING

WING AND U TYPE HEADWALLS FOR 18" TO 36" PIPES

RECOMMENDED BY THE SAN DIEGO REGIONAL STANDARDS COMMITTEE

T. Stanton 3/01/2003

Chairperson R.C.E. 19246 Date

DRAWING NUMBER D-34

This drawing is NOT in conformance with latest UBC and should be used with care and judgment.

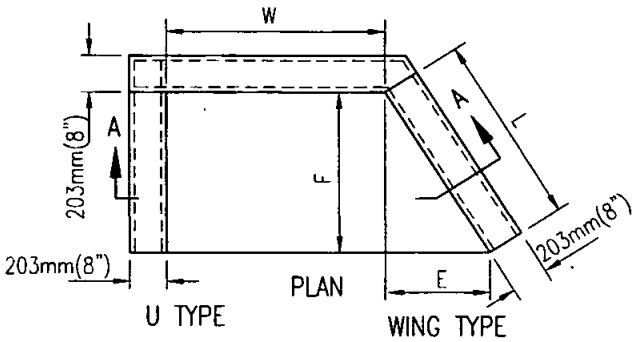

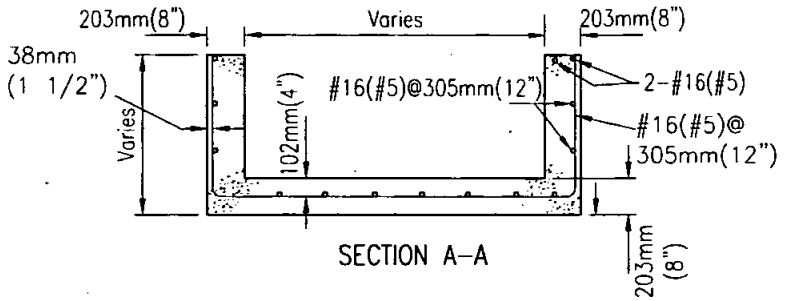

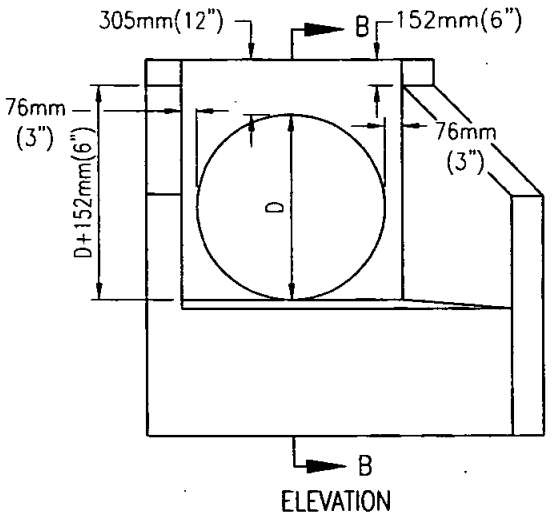

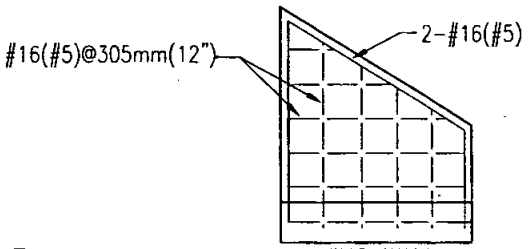

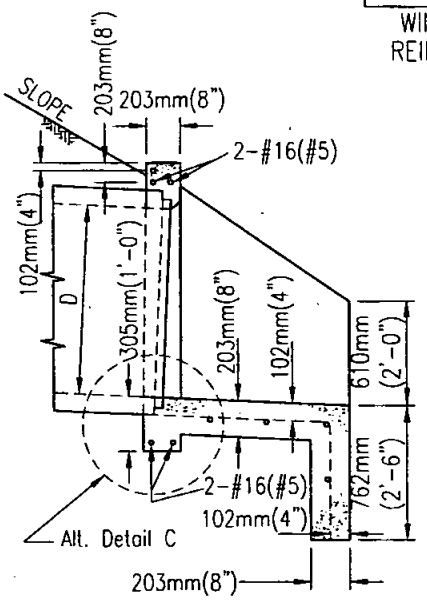

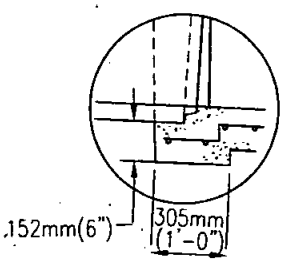

NOTE:

For Dimension Table and General Notes, see D-35B

FOR TABLE OF DIMENSIONS AND QUANTITIES, SEE DRWAWING D-35B

Revision	By	Approved	Date
ORIGINAL		Kercheval	12/75
Add Metric		T. Stanton	03/03

SAN DIEGO REGIONAL STANDARD DRAWING

WING AND U TYPE HEADWALLS
FOR 42" TO 84" PIPE

RECOMMENDED BY THE SAN DIEGO REGIONAL STANDARDS COMMITTEE

T. Stanton 3/10/2003

Chairperson R.C.E. 19246 Date

DRAWING NUMBER D-35A

This drawing is NOT in conformance with latest UBC and should be used with care and judgment.

TABLE OF DIMENSIONS AND QUANTITIES
SEE DRAWING D-35B

	DIA. OF PIPE	DIMENSIONS			SINGLE PIPE					DOUBLE PIPE				
						U TYPE		WING TYPE			U TYPE		WING TYPE	
		L	E	F	W	CONC.	STEEL	CONC.	STEEL	W	CONC.	STEEL	CONC.	STEEL
						C.Y.	LBS.	C.Y.	LBS.		C.Y.	LBS.	C.Y.	LBS.
Metric	1.07m	1.10m	610mm	914mm	1.22m	1.20 cu m	53.1 kg	1.46 kg	61.3 kg	AS SHOWN ON PLANS	2.1 cu m	86.2 kg	2.5 cu m	97.1 kg
U.S.	42"	3'-7 1/4"	2'-0"	3'-0"	4'-0"	1.57 C.Y.	117lb	1.90 C.Y.	135 lb		2.69 C.Y.	190 lb	3.16 C.Y.	214 lb
Metric	1.22m	1.37m	762mm	1.14m	1.37m	1.51 cu m	70.0 kg	1.90 cu m	84.0 kg		2.62 cu m	115 kg	3.11 cu m	131 kg
U.S.	48"	4'-6"	2'-6"	3'-9"	4'-6"	1.97 C.Y.	153 lb	2.48 C.Y.	184 lb		3.43 C.Y.	252 lb	4.06 C.Y.	288 lb
Metric	1.37m	1.65m	914mm	1.37m	1.52m	1.85 cu m	86.2 kg	2.35 cu m	112 kg		3.25 cu m	145 kg	3.87 cu m	176 kg
U.S.	54"	5'-4 7/8"	3'-0"	4'-6"	5'-0"	2.41 C.Y.	190 lb	3.07 C.Y.	246 lb		4.24 C.Y.	319 lb	5.06 C.Y.	368 lb
Metric	1.52m	1.92m	1.10m	1.60m	1.68m	2.21 cu m	109 kg	2.87 cu m	134 kg		3.40 cu m	175 kg	4.72 cu m	201 kg
U.S.	60"	6'-3 3/4"	3'-6"	5'-3"	5'-6"	2.88 C.Y.	239 lb	3.75 C.Y.	294 lb		5.13 C.Y.	386 lb	6.17 C.Y.	442 lb
Metric	1.68m	2.20m	1.22m	1.83m	6'-0"	2.59 cu m	134 kg	3.46 cu m	162 kg		4.65 cu m	206 kg	5.51 cu m	234 kg
U.S.	66"	7'-2 1/2"	4'-0"	6'-0"	6'-0"	3.38 C.Y.	294 lb	4.52 C.Y.	356 lb		6.08 C.Y.	454 lb	7.20 C.Y.	516 lb
Metric	1.83m	2.47m	1.37m	1.80m	1.98m	3.0 cu m	167 kg	4.22 cu m	190 kg		5.44 cu m	237 kg	6.35 cu m	267 kg
U.S.	72"	8'-1 3/8"	4'-6"	6'-9"	6'-6"	3.93 C.Y.	368 lb	5.52 C.Y.	417 lb		7.11 C.Y.	522 lb	8.30 C.Y.	588 lb
Metric	1.98m	2.74m	1.52m	2.29m	2.13m	3.45 cu m	202 kg	5.13 cu m	229 kg		6.27 cu m	270 kg	7.27 cu m	315 kg
U.S.	78"	9'-0"	5'-0"	7'-6"	7'-0"	4.50 C.Y.	444 lb	6.70 C.Y.	503 lb		8.20 C.Y.	595 lb	9.50 lb	693 lb
Metric	2.13m	2.71m	1.68m	2.51m	2.29m	3.99 cu m	245 kg	6.24 cu m	281 kg		7.27 cu m	312 kg	8.26 cu m	357 kg
U.S.	84"	9'-10 3/4"	5'-6"	8'-3"	7'-6"	5.21 C.Y.	540 lb	8.15 C.Y.	619 lb		9.50 C.Y.	687 lb	10.80 C.Y.	786 lb

Note: Dimensions E and L apply to wing type only.

NOTES:

1. Skewed Pipes: Dimension W to be increased to take care of increased width or length due to skew of multiple pipes.
2. Tops of headwalls, on grade culverts, shall be placed parallel to profile grade when the grades are 3% or more.
3. Concrete shall be 560-C-3250
4. Exposed corners shall chamfered 3/4".
5. Multiple pipes shall be set a distance of D/2, with a 1" minimum, between outside diameters of pipes.
6. For pipe wall thickness greater than 3" use Alternate Detail-C.

LEGEND ON PLANS

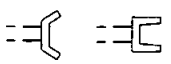

Revision	By	Approved	Date
ORIGINAL		Kercheval	12/75
Add Metric		T. Stanton	03/03

SAN DIEGO REGIONAL STANDARD DRAWING

WING AND U TYPE HEADWALLS FOR 42" TO 84" PIPE

RECOMMENDED BY THE SAN DIEGO REGIONAL STANDARDS COMMITTEE

T. Stanton 3/01/2003

Chairperson R.C.E. 19246 Date

DRAWING NUMBER D-35B

This drawing is NOT in conformance with latest UBC and should be used with care and judgment.

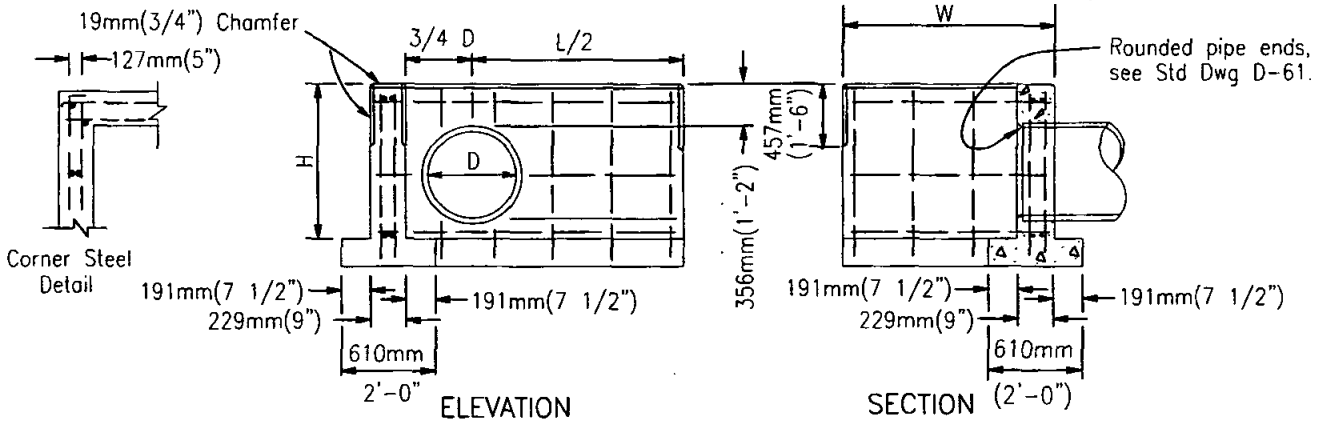

D	H	L/2	LENGTH OF W									
			965mm (3'-4")		1.47m (4'-10")		1.93m (6'-4")		2.39m (7'-10")		2.85m (9'-4")	
			Steel	Conc	Steel	Conc	Steel	Conc	Steel	Conc	Steel	Conc
310mm 12"	813mm 2'-8"	762mm 2'-6"	22.7kg 50lb	0.61cu m 0.79 C.Y.	27.3kg 60lb	.750cu m 0.98 C.Y.	— —	— —	— —	— —	— —	— —
381mm 15"	889mm 2'-11"	914mm 3'-0"	25.0kg 55lb	0.70cu m 0.91 C.Y.	30.0kg 65lb	.850cu m 1.11 C.Y.	— —	— —	— —	— —	— —	— —
457mm 18"	965mm 3'-2"	1.07m 3'-6"	30.0kg 65lb	.796cu m 1.04 C.Y.	34kg 75lb	.956cu m 1.25 C.Y.	— —	— —	— —	— —	— —	— —
533mm 21"	1.04m 3'-5"	1.14m 3'-9"	34.0kg 75lb	.880cu m 1.15 C.Y.	40.9kg 90	1.04cu m 1.36 C.Y.	— —	— —	— —	— —	— —	— —
610mm 24"	1.12m 3'-8"	1.30m 4'-3"	38.6kg 85lb	.990cu m 1.29 C.Y.	45.4kg 100lb	1.16cu m 1.51 C.Y.	50.0kg 110lb	1.33cu m 1.74 C.Y.	— —	— —	— —	— —
686mm 27"	1.14m 3'-11"	1.45m 4'-9"	40.9kg 90lb	1.10cu m 1.44 C.Y.	47.7kg 105lb	1.28cu m 1.67 C.Y.	52.2kg 115lb	1.91cu m 1.91 C.Y.	— —	— —	— —	— —
762mm 30"	1.27m 4'-2"	1.52m 5'-0"	43.0kg 95lb	1.19cu m 1.55 C.Y.	50,0kg 110lb	1.38cu m 1.80 C.Y.	54.5kg 120lb	2.05cu m 2.05 C.Y.	61.3kg 135lb	1.75cu m 2.29 C.Y.	— —	— —
838mm 33"	1.35m 4'-5"	1.68m 5'-6"	47.7kg 105lb	1.31cu m 1.71 C.Y.	54.5kg 120lb	1.51cu m 1.97 C.Y.	61.3kg 135lb	2.23cu m 2.23 C.Y.	68.0kg 150lb	1.90cu m 2.48 C.Y.	— —	— —
914mm 36"	1.42m 4'-8"	1.83m 6'-0"	50.0kg 110lb	1.44cu m 1.88 C.Y.	56.7kg 125lb	1.65cu m 2.15 C.Y.	63.5kg 140lb	2.41cu m 2.41 C.Y.	70.3kg 155lb	2.05cu m 2.68 C.Y.	77.2kg 170lb	2.26cu m 2.95 C.Y.
991mm 39"	1.25m 4'-11"	1.90m 6'-3"	— —	— —	68.0kg 150lb	1.75cu m 2.28 C.Y.	77.2kg 170lb	2.56cu m 2.56 C.Y.	84.0kg 185lb	2.18cu m 2.84 C.Y.	90.8kg 200lb	2.39cu m 3.12 C.Y.
1.07m 42"	1.58m 5'-2"	2.06m 6'-9"	— —	— —	70.3kg 155lb	1.85cu m 2.42 C.Y.	79.4kg 175lb	2.76cu m 2.76 C.Y.	86.2kg 190lb	2.34cu m 3.05 C.Y.	95.3kg 210lb	2.56cu m 3.34 C.Y.
1.14m 45"	1.65m 5'-5"	2.21m 7'-3"	— —	— —	— —	— —	81.7kg 180lb	2.97cu m 2.97 C.Y.	90.8kg 200lb	2.50cu m 3.27 C.Y.	97.6kg 215lb	2.73cu m 3.57 C.Y.
1.22m 48"	1.73m 5'-8"	2.29m 7'-6"	— —	— —	— —	— —	86.2kg 190lb	3.13cu m 3.13 C.Y.	98.0kg 216lb	2.63cu m 3.44 C.Y.	105kg 230lb	2.87cu m 3.75 C.Y.
1.30m 51"	1.80m 5'-11"	2.44m 8'-0"	— —	— —	— —	— —	— —	— —	99.8kg 220lb	2.81cu m 3.67 C.Y.	107kg 235lb	3.05cu m 3.99 C.Y.
1.37m 54"	1.88m 6'-2"	2.59m 8'-6"	— —	— —	— —	— —	— —	— —	107kg 235lb	2.99cu m 3.91 C.Y.	114kg 250lb	3.25cu m 4.24 C.Y.

NOTES

1. Concrete shall be 332 kg/M^3-C-22Mpa (560-C-3250).
2. All reinforcing steel #13 (#4) bars. All vertical and horizontal tie bars 457mm (18") maximum spacing.
3. When multiple pipes are used, the distance between pipes shall be S/2 (305mm (1') min.). The dimension L/2 is from the center of the pipe to the end of the headwall as shown.

LEGEND ON PLANS

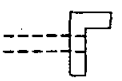

Revision	By	Approved	Date
ORIGINAL		Kercheval	12/75
Add Metric		T. Stanton	03/03

SAN DIEGO REGIONAL STANDARD DRAWING

L TYPE HEADWALLS
CIRCULAR PIPES

RECOMMENDED BY THE SAN DIEGO REGIONAL STANDARDS COMMITTEE

T. Stanton 3/10/2003

Chairperson R.C.E. 19246 Date

DRAWING NUMBER D-36

This drawing is NOT in conformance with latest UBC and should be used with care and judgment.

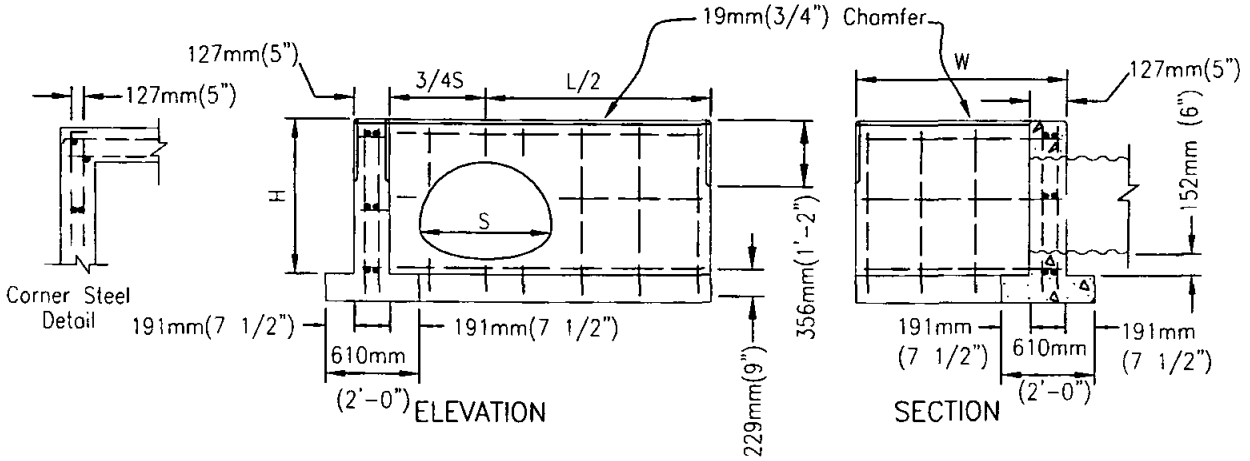

CSP ARCH SIZE		H	L/2	LENGTH OF W									
				1.02m (3'-4")		1.47m (4'-10")		1.93m (6'-4")		2.39m (7'-10")		2.84m (9'-4")	
				Steel	Conc	Steel	Conc	Steel	Conc	Steel	Conc	Steel	Conc
Metric U.S.	457mm x 279mm 18"x11"	787mm 2'-7"	838mm 2'-9"	22.7kg 50lb	.643cu m 0.84 C.Y.	27.3kg 60lb	.788cu m 1.03 C.Y.	31.8kg 70lb	.926cu m 1.21 C.Y.	36.3kg 80lb	1.07cu m 1.39 C.Y.	40.9kg 90lb	1.20cu m 1.57 C.Y.
Metric U.S.	533mm x 381mm 21"x15"	889mm 2'-11"	991mm 3'-3"	27.3kg 60lb	.765cu m 1.00 C.Y.	29.5kg 65lb	.910cu m 1.18 C.Y.	34.0kg 75lb	1.06cu m 1.38 C.Y.	40.9kg 90lb	1.21cu m 1.58 C.Y.	54.4kg 100lb	1.36cu m 1.77 C.Y.
Metric U.S.	610mm x 457mm 24"x18"	965mm 3'-2"	1.14m 3'-9"	27.3kg 60lb	.818cu m 1.07 C.Y.	31.8kg 70lb	1.00cu m 1.32 C.Y.	36.3kg 80lb	1.17cu m 1.53 C.Y.	43.1kg 95lb	1.33cu m 1.74 C.Y.	49.9kg 110lb	1.49cu m 1.94 C.Y.
Metric U.S.	711mm x 508mm 28"x20"	1.02m 3'-4"	1.30m 4'-3"	31.8kg 70lb	.964cu m 1.26 C.Y.	36.3kg 80lb	1.13cu m 1.47 C.Y.	40.9kg 90lb	1.29cu m 1.68 C.Y.	45.4kg 100lb	1.45cu m 1.90 C.Y.	52.2kg 115lb	1.62cu m 2.11 C.Y.
Metric U.S.	889mm x 610mm 35"x24"	1.07m 3'-8"	1.35m 5'-3"	45.36 100lb	1.16cu m 1.51 C.Y.	49.9kg 110lb	1.33cu m 1.74 C.Y.	54.5kg 120lb	1.51cu m 1.97 C.Y.	63.5kg 140lb	1.69cu m 2.20 C.Y.	70.3kg 155lb	1.85cu m 2.42 C.Y.
Metric U.S.	1.07m x 737mm 42"x29"	1.25m 4'-1"	1.90m 6'-3"	52.2kg 115lb	1.40cu m 1.82 C.Y.	59.0kg 130lb	1.58cu m 2.06 C.Y.	63.5kg 140lb	1.77cu m 2.31 C.Y.	70.3kg 155lb	1.95cu m 2.55 C.Y.	77.2kg 170lb	2.17cu m 2.83 C.Y.
Metric U.S.	1.25m x 838mm 49"x33"	1.35m 4'-5"	2.21m 7'-3"	59.0kg 130lb	1.62cu m 2.12 C.Y.	65.8kg 145lb	1.82cu m 2.37 C.Y.	70.3kg 155lb	2.02cu m 2.64 C.Y.	77.2kg 170lb	2.22cu m 2.90 C.Y.	84.0kg 185lb	2.41cu m 3.15 C.Y.
Metric U.S.	1.45m x 965mm 57"x38"	1.47m 4'-10"	2.59m 8'-6"	65.8kg 145lb	1.93cu m 2.52 C.Y.	75.6kg 160lb	2.14cu m 2.79 C.Y.	79.4kg 175lb	2.35cu m 3.07 C.Y.	86.2kg 190lb	2.57cu m 3.35 C.Y.	93.0kg 205lb	2.76cu m 3.61 C.Y.
Metric U.S.	1.63m x 1.09m 64"x43"	1.35m 5'-3"	2.90m 9'-6"	84.0kg 185lb	2.21cu m 2.89 C.Y.	90.8kg 200lb	2.38cu m 3.11 C.Y.	97.6kg 215lb	2.66cu m 3.48 C.Y.	107kg 235lb	2.89cu m 3.77 C.Y.	114kg 250lb	3.11cu m 4.06 C.Y.
Metric U.S.	1.80m x 1.19m 71"x47"	1.45m 5'-7"	3.20m 10'-6"	90.8kg 200lb	2.49cu m 3.25 C.Y.	97.6kg 215lb	2.73cu m 3.56 C.Y.	107kg 235lb	2.96cu m 3.86 C.Y.	114kg 250lb	3.19cu m 4.17 C.Y.	123kg 270lb	3.43cu m 4.48 C.Y.

NOTES

1. Concrete shall be 332 kg/M^3-C-22Mpa (560-C-3250).
2. All reinforcing steel #13 (#4) bars. All vertical and horizontal tie bars 457mm (18") maximum spacing.
3. When multiple pipes are used, the distance between pipes shall be S/2 (305mm (1') min.). The dimension L/2 is from the center of the pipe to the end of the headwall as shown.

LEGEND ON PLANS

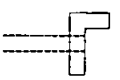

Revision	By	Approved	Date
ORIGINAL		Kercheval	12/75
Add Metric		T. Stanton	03/03

SAN DIEGO REGIONAL STANDARD DRAWING

L TYPE HEADWALLS
CORRUGATED STEEL PIPE ARCH

RECOMMENDED BY THE SAN DIEGO REGIONAL STANDARDS COMMITTEE

T. Stanton 3/01/2003

Chairperson R.C.E. 19246 Date

DRAWING NUMBER D-37

This drawing is NOT in conformance with latest UBC and should be used with care and judgment.

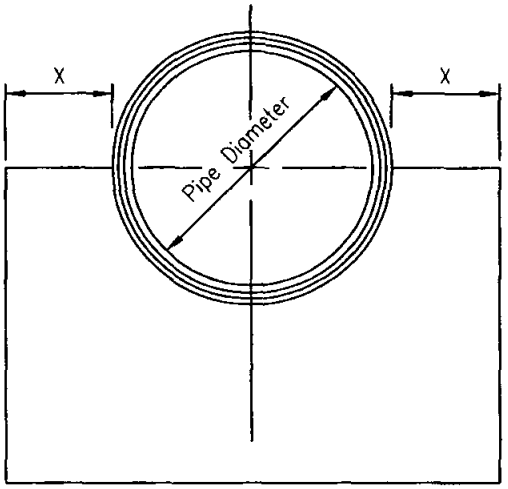

FACE ELEVATION

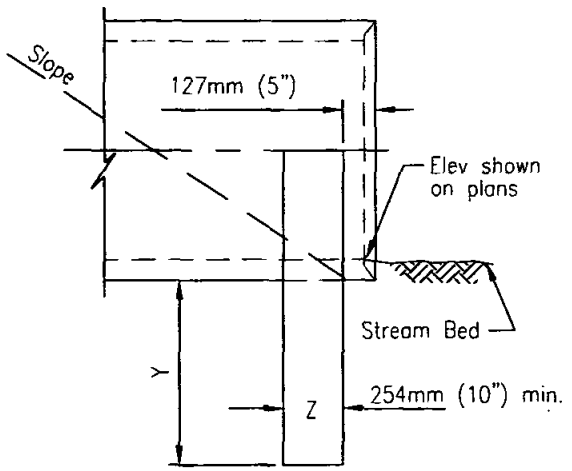

SIDE ELEVATION

PIPE DIAMETER	X	Y	Z
305mm (12") TO 610mm (24")	310mm (1"-0")	610mm (2"-0")	254mm (10")
533mm (21") TO 914mm (36")	457mm (1"-6")	762mm (2"-6")	305mm (12")
991mm (39") TO 1.22m (48")	610mm (2'-0")	914mm (3'-0")	305mm (12")
1.30m (51") TO 1.52m (60")	762mm (2'-6")	914mm (3'-0")	356mm (14")
1.60m (63") & Larger	914mm (3'-0")	914mm (3'-0")	356mm (14")

NOTES

1. A curtain wall shall be used in place of a headwall at culvert ends where extension of the culvert is considered imminent or, no fill is retained.
2. Concrete shall be 332 kg/M^3-C-22Mpa (560-C-3250).
3. Keep the pipe-end clear of obstructions to permit easy placing of culvert extension.

LEGEND ON PLANS

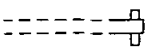

Revision	By	Approved	Date
ORIGINAL		Kercheval	12/75
Add Metric		T. Stanton	03/03

SAN DIEGO REGIONAL STANDARD DRAWING

CURTAIN WALL

RECOMMENDED BY THE SAN DIEGO REGIONAL STANDARDS COMMITTEE

T. Stanton 3/01/2003

Chairperson R.C.E. 19246 Date

DRAWING NUMBER D-38

This drawing is NOT in conformance with latest UBC and should be used with care and judgment.

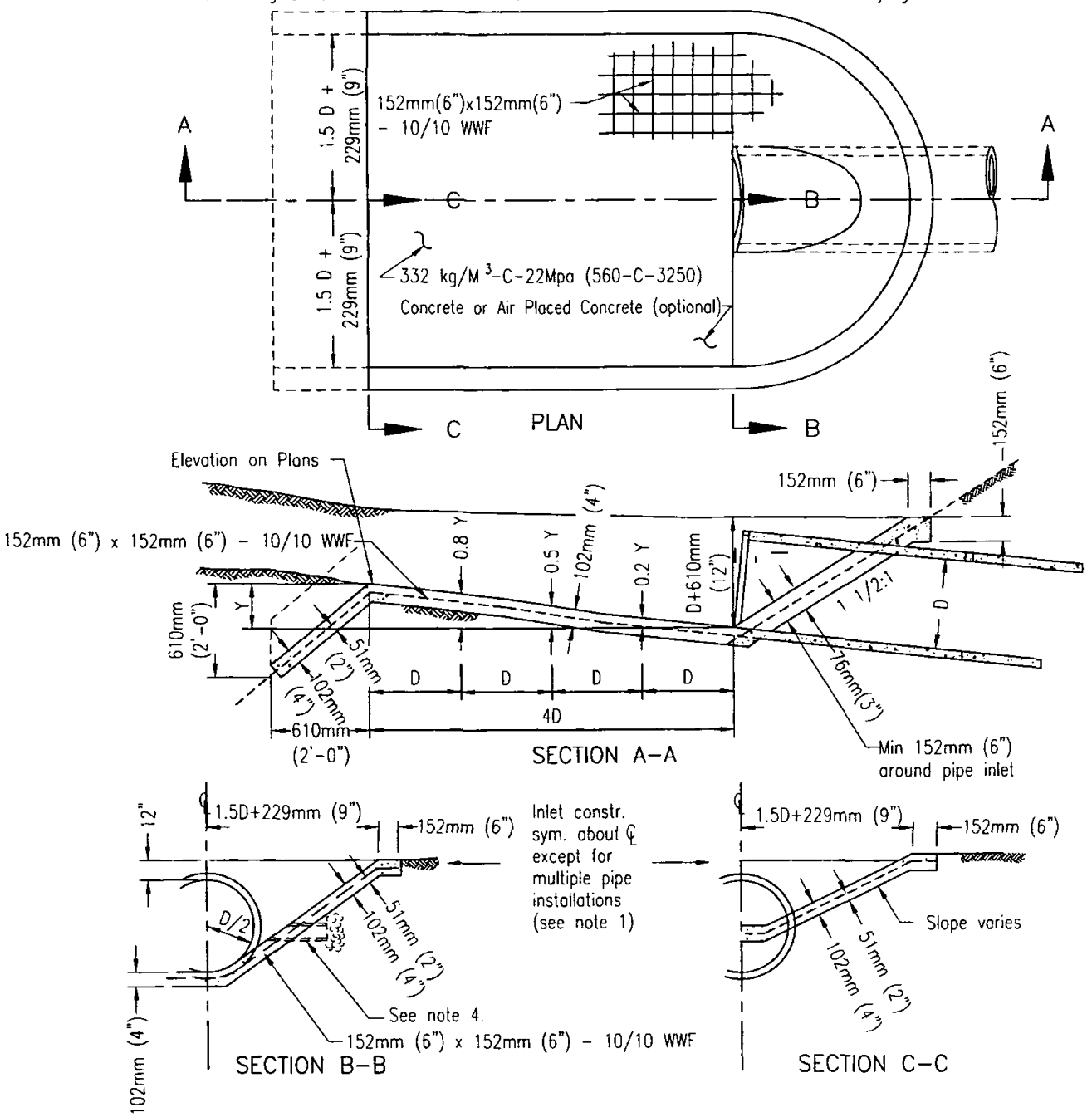

NOTES

1. When more than one pipe is used the profile view shown shall hold for the distance across across all pipe openings. Section A-A and B-B shall be from the outermost pipe. The distance between pipes shall be D/2 for round and Span/3 for arch pipe. (305mm (12") minimum).
2. Culvert shall be cut off even with apron surface when required by the Agency.
3. Use inlet Apron only where a flared and section can not be utilized.
4. Place weep holes when required by the Agency.

LEGEND ON PLANS

Revision	By	Approved	Date
ORIGINAL		Kercheval	12/75
Add Metric		T. Stanton	03/03

SAN DIEGO REGIONAL STANDARD DRAWING

INLET APRON FOR CULVERTS UP TO 42" DIAMETER

RECOMMENDED BY THE SAN DIEGO REGIONAL STANDARDS COMMITTEE

T. Stanton 3/10/2003

Chairperson R.C.E. 19246 Date

DRAWING NUMBER D-39

This drawing is NOT in conformance with latest UBC and should be used with care and judgment.

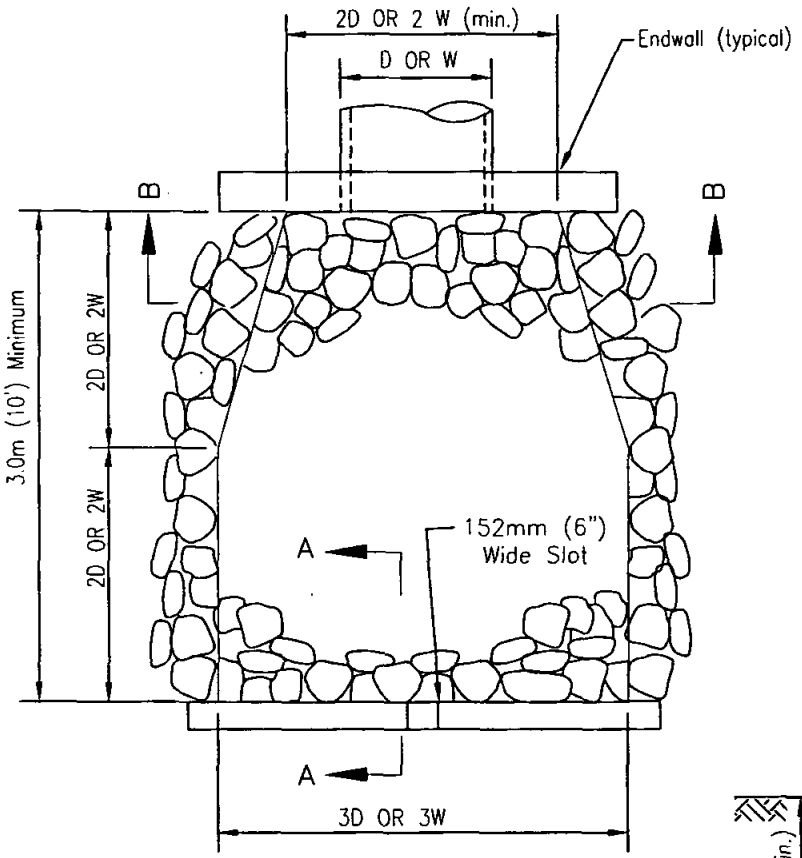

PLAN

D = Pipe Diameter
W = Bottom Width of Channel

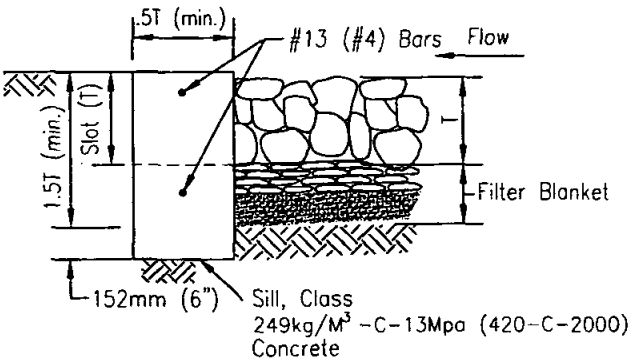

SECTION A–A

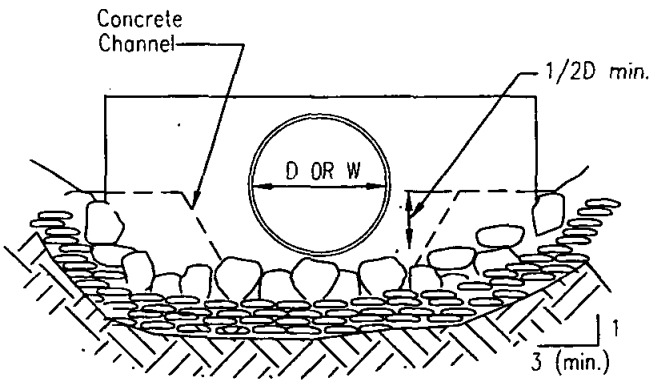

SECTION B–B

NOTES

1. Plans shall specify:
   A) Rock Class and thickness (T).
   B) Filter material, number of layers and thickness.
2. Rip rap shall be either quarry stone or broken concrete (if shown on the plans.) Cobbles are not acceptable.
3. Rip rap shall be placed over filter blanket which may be either granular material or filter fabric.
4. See Regional Supplement Amendments for selection of rip rap and filter blanket.
5. Rip rap energy dissipators shll be designated as either Type 1 or Type 2. Type 1 shall be with concrete sill; Type 2 shall be without sill.

Revision	By	Approved	Date
ORIGINAL		Kercheval	12/75
Add Metric		T. Stanton	03/03

SAN DIEGO REGIONAL STANDARD DRAWING

RIP RAP
ENERGY DISSIPATOR

RECOMMENDED BY THE SAN DIEGO REGIONAL STANDARDS COMMITTEE

T. Stanton 3/01/2003

Chairperson R.C.E. 19246 Date

DRAWING NUMBER D-40

This drawing is NOT in conformance with latest UBC and should be used with care and judgment.

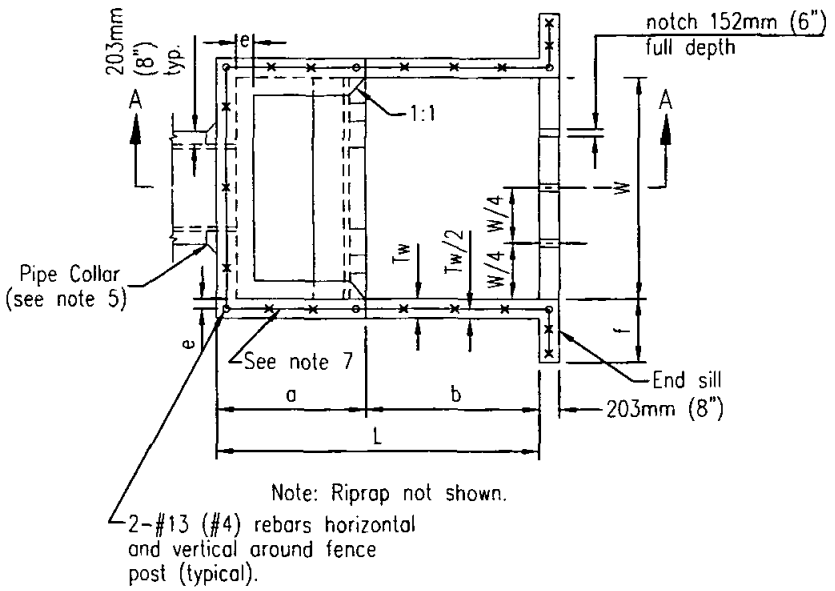

Note: Riprap not shown.

PLAN

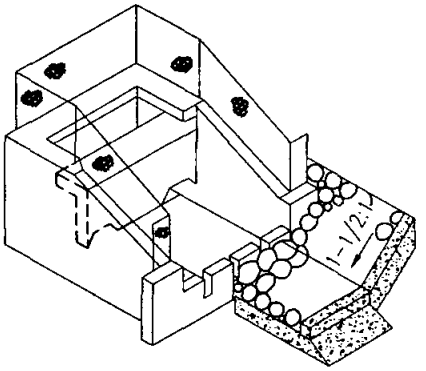

PICTORIAL VIEW

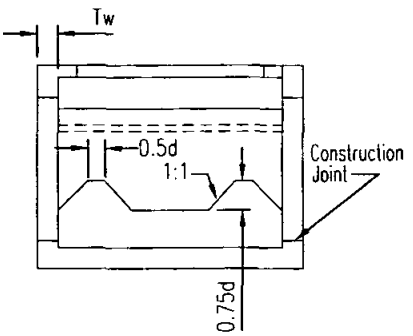

SECTION B-B

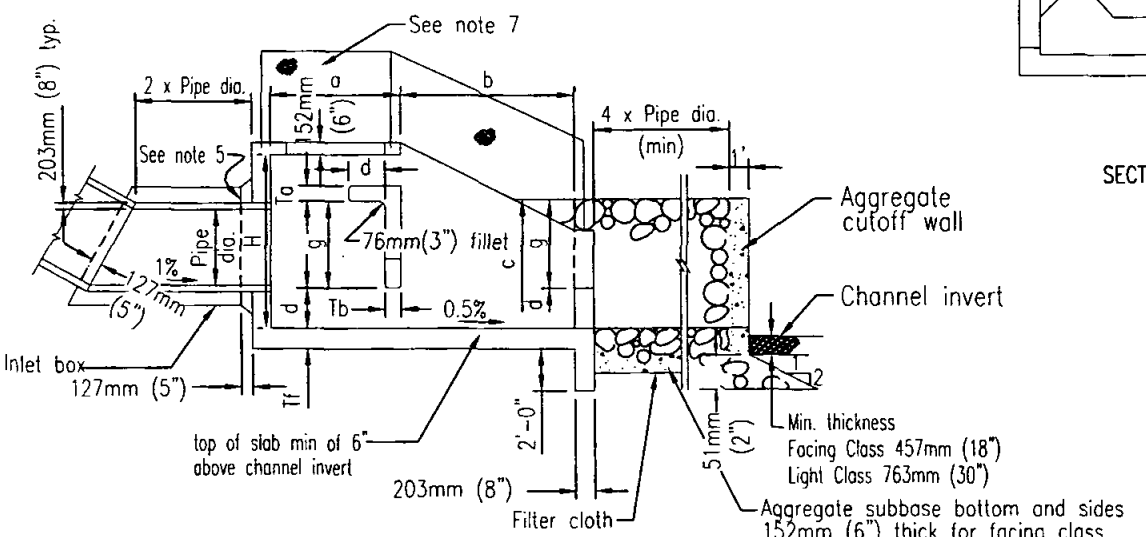

SECTION A-A

NOTES

1. Design
   Equivalent Fluid Pressure (Earth Loading)= 961 kg/cu m (60 p.c.f.)

   Maximum Outlet velocity = 10.7m (35')/s
2. Concrete shall be 332 kg/M ^{3}-C-22Mpa (560-C-3250)
3. Reinforcing shall conform to ASTM designation A615 and may be grade 40 or 60. Reinforcing shall be placed with 51mm (2") clear concrete cover unless noted otherwise. Splices shall not be permitted except as indicated on the plans.
4. For pipe grades not exceeding 20%, inlet box may be omitted.
5. If inlet box is omitted, construct pipe collar as shown.
6. Unless noted otherwise, all reinforcing bar bends shall be fabricated with standard hooks.
7. Five foot high chain link fencing, embed post 18" deep in walls and encase with class B mortar.
8. *In Sandy and Silty soil:*
   a) Riprap and aggregate base cutoff wall required at the end of rock apron.
   b) Filter cloth (Polyfilter X or equivalent) shall be installed on native soil base, minimum of 305mm (1 ft.) overlaps at joints.
9. Rip rap and subbase classification shall be as shown on plans.

FOR DIMENSIONS, SEE D-41B.

Revision	By	Approved	Date
ORIGINAL		Kercheval	12/75
Add Metric		T. Stanton	03/03

SAN DIEGO REGIONAL STANDARD DRAWING

CONCRETE ENERGY DISSIPATOR

RECOMMENDED BY THE SAN DIEGO REGIONAL STANDARDS COMMITTEE

T. Stanton 3/10/2003

Chairperson R.C.E. 19246 Date

DRAWING NUMBER D-41A

This drawing is NOT in conformance with latest UBC and should be used with care and judgment.

METRIC DIMENSIONS TABLE, FOR STRUCTURE DETAILS SEE D-41A.

Pipe Dia	457mm	610mm	9.14m	11.0m	12.80m	14.63m	16.46m	18.29m	21.95m
Area (sq. m)	.164	.292	.456	.657	.893	1.17	1.48	1.82	2.63
Max. Q (cu m/s)	.594	1.08	1.67	2.41	3.26	4.28	5.41	6.68	9.60
W	1.66m	1.80m	2.13m	2.82m	3.20m	3.58m	3.96	4.34	5.03m
H	1.30m	1.60m	1.90m	2.21m	2.44m	2.74m	2.87m	3.28m	3.73m
L	2.24m	2.74m	3.25m	3.76m	4.27m	4.78m	5.28m	5.79m	6.71m
a	991mm	1.19m	1.40m	1.60m	1.83m	1.80m	2.24m	2.44m	2.82m
b	1.24m	1.55m	1.85m	2.16m	2.44m	2.72m	3.05m	3.35m	3.87m
c	711mm	864mm	1.02m	1.17m	1.35m	1.50m	1.65m	1.80m	2.11m
d	279mm	356mm	406mm	482mm	533mm	610mm	660mm	737mm	838mm
e	152mm	152mm	203mm	203mm	254mm	254mm	305mm	305mm	381mm
f	457mm	610mm	762mm	914mm	914mm	914mm	914mm	914mm	914mm
g	635mm	762mm	914mm	1.07m	1.19m	1.35m	1.50m	1.63m	1.88m
Tf	203mm			254mm		305mm			
Tb	178mm			241mm		267mm			
Tw	178mm			241mm		267mm			
Ta	178mm			203mm					

IMPERIAL DIMENSIONS TABLE, FOR STRUCTURE DETAILS SEE D-41A.

Pipe Dia (in)	18	24	30	36	42	48	54	60	72
Area (sq.ft.)	1.77	3.14	4.91	7.07	9.62	12.57	15.90	19.63	28.27
Max. Q (cfs)	21	38	59	85	115	151	191	236	339
W	5'-6"	6'-9"	8'-0"	9'-3"	10'-6"	11'-9"	13'-0"	14'-3"	16'-6"
H	4'-3"	5'-3"	6'-3"	7'-3"	8'-0"	9'-0"	9'-9"	10'-9"	12'-3"
L	7'-4"	9'-0"	10'-8"	12'-4"	14'-0"	15'-8"	17'-4"	19'-0"	22'-0"
a	3'-3"	3'-11"	4'-7"	5'-3"	6'-0"	6'-9"	7'-4"	8'-0"	9'-3"
b	4'-1"	5'-1"	6'-1"	7'-1"	8'-0"	8'-11"	10'-0"	11'-0"	12'-9"
c	2'-4"	2'-10"	3"-4"	3'-10"	4'-5"	4'-11"	5'-5"	5'-11"	6'-11"
d	0'-11"	1'-2"	1'-4"	1'-7"	1'-9"	2'-0"	2'-2"	2'-5"	2'-9"
e	0'-6"	0'-6"	0'-8"	0'-8"	0'-10"	0'-10"	1'-0"	1'-0"	1'-3"
f	1'-6"	2'-0"	2'-6"	3'-0"	3'-0"	3'-0"	3'-0"	3'-0"	3'-0"
g	2'-1"	2'-6"	3'-0"	3'-6"	3'-11"	4'-5"	4'-11"	5'-4"	6'-2"
Tf	8"			10"		12"			
Tb	7"			9 1/2"		10 1/2"			
Tw	7"			9 1/2"		10 1/2"			
Ta	7"			8"					

Revision	By	Approved	Date
ORIGINAL		Kercheval	12/75
Add Metric		T. Stanton	03/03

SAN DIEGO REGIONAL STANDARD DRAWING

CONCRETE ENERGY DISSIPATOR

RECOMMENDED BY THE SAN DIEGO REGIONAL STANDARDS COMMITTEE

T. Stanton 3/01/2003

Chairperson R.C.E. 19246 Date

DRAWING NUMBER D-41B

This drawing is NOT in conformance with latest UBC and should be used with care and judgment.

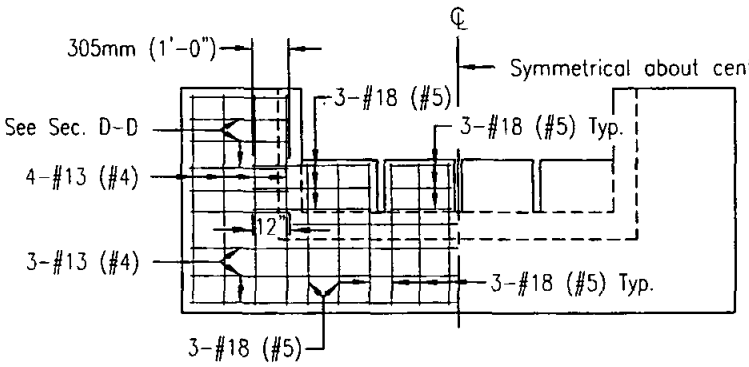

END SILL ELEVATION

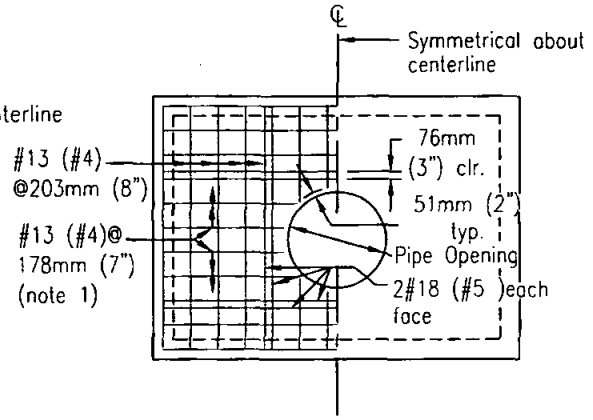

HEADWALL ELEVATION

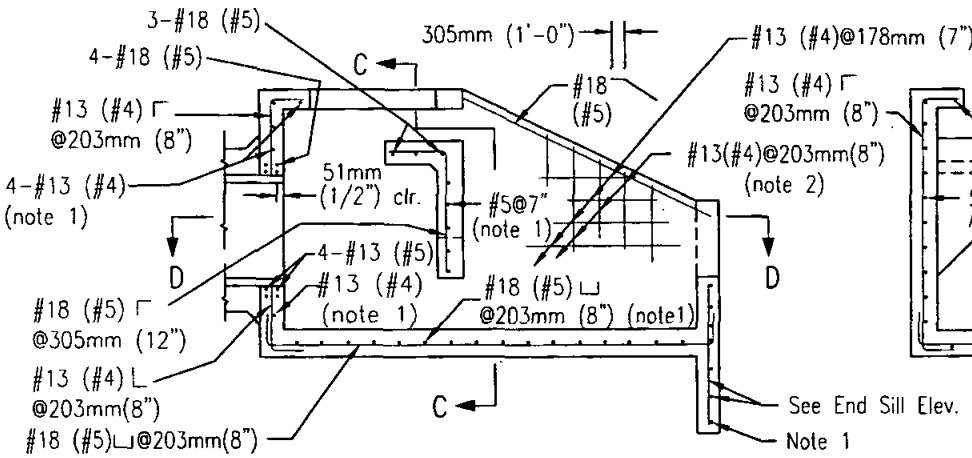

SECTION A-A

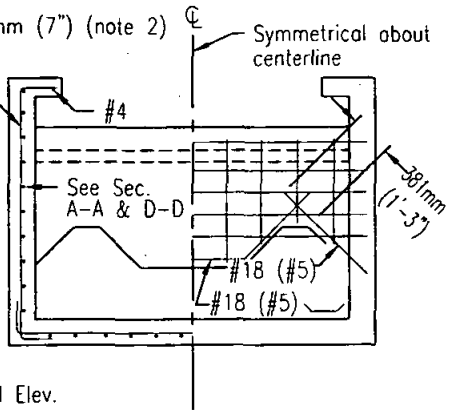

SECTION C-C

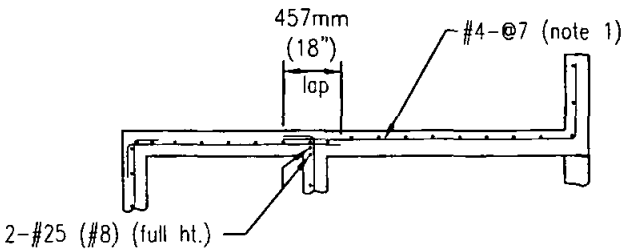

SECTION D-D

NOTES

1. Place reinforcing, as noted, at center wall (or slab).
2. Match location of reinforcing with that in headwall, end sill and foundation slab.
3. All reinforcing shall be placed with 51mm (2") concrete cover, unless noted otherwise.

Revision	By	Approved	Date
ORIGINAL		Kercheval	12/75
Add Metric		T. Stanton	03/03

SAN DIEGO REGIONAL STANDARD DRAWING

CONCRETE ENERGY DISSIPATOR
[REINFORCEMENT]
18" TO 30" DIAMETER PIPE

RECOMMENDED BY THE SAN DIEGO REGIONAL STANDARDS COMMITTEE

T. Stanton 3/01/2003

Chairperson R.C.E. 19246 Date

DRAWING NUMBER D-42

This drawing is NOT in conformance with latest UBC and should be used with care and judgment.

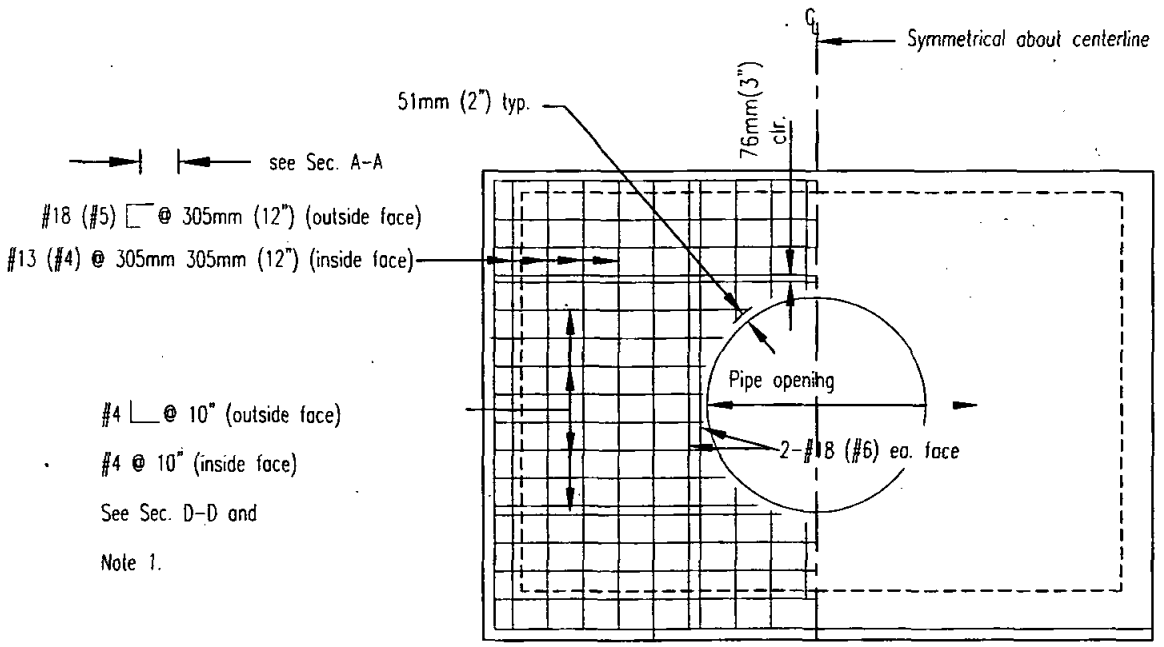

HEADWALL ELEVATION

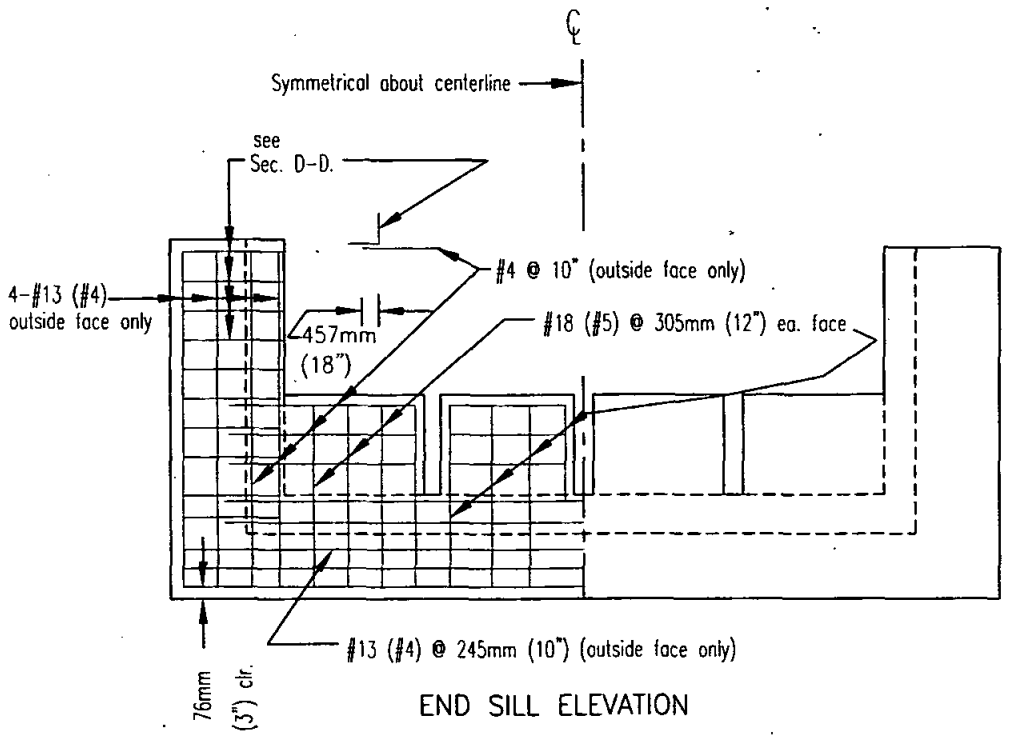

END SILL ELEVATION

Revision	By	Approved	Date
ORIGINAL		Kercheval	12/75
Add Metric		T. Stanton	03/03

SAN DIEGO REGIONAL STANDARD DRAWING

CONCRETE ENERGY DISSIPATOR
[REINFORCEMENT]
36" TO 72" DIAMETER PIPE

RECOMMENDED BY THE SAN DIEGO REGIONAL STANDARDS COMMITTEE

T. Stanton 3/10/2003

Chairperson R.C.E. 19246 Date

DRAWING NUMBER D-43A

This drawing is NOT in conformance with latest UBC and should be used with care and judgment.

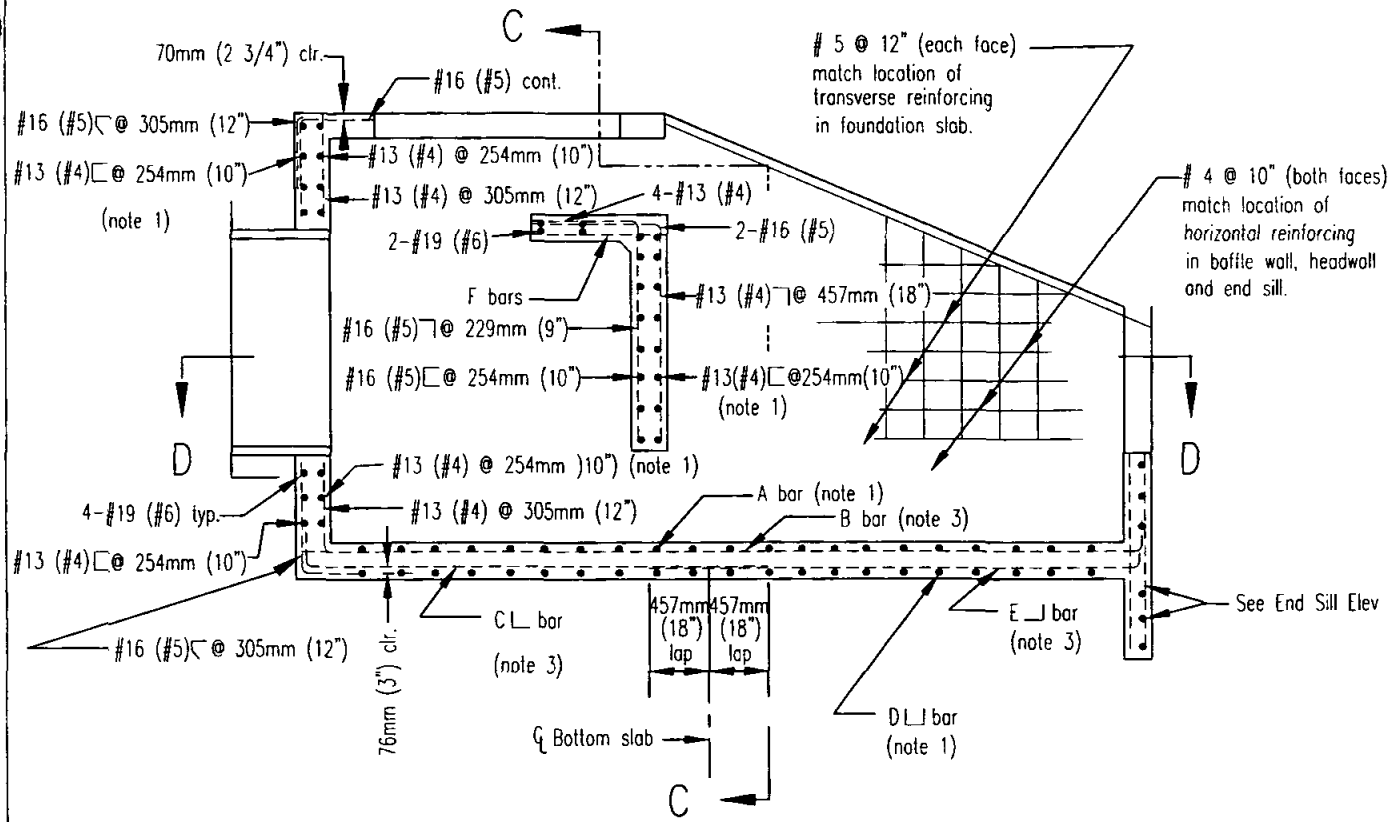

SECTION A–A

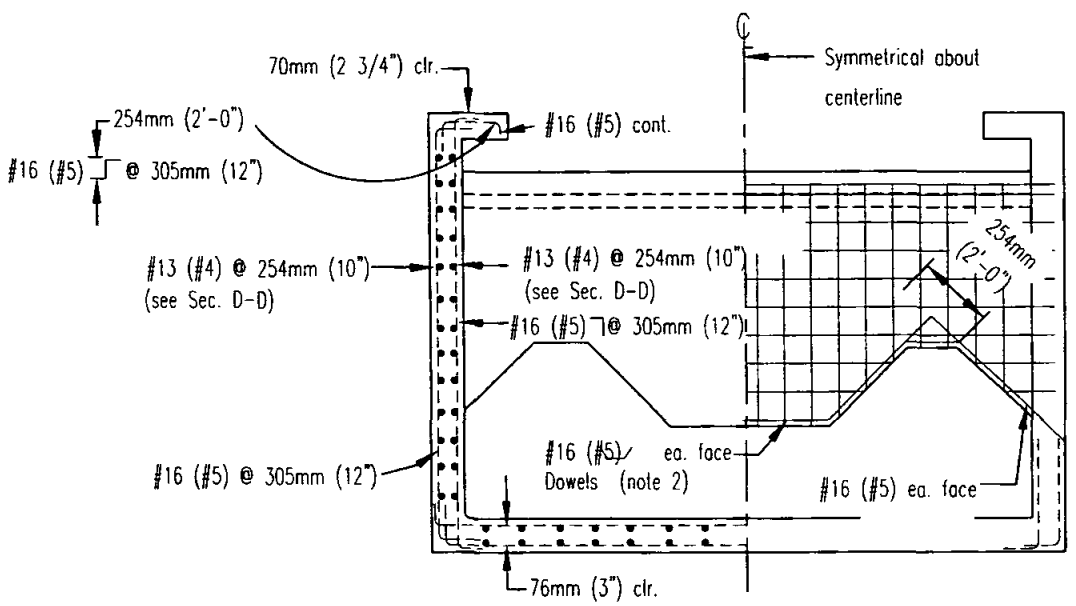

SECTION D–D

Revision	By	Approved	Date
ORIGINAL		Kercheval	12/75
Add Metric		T. Stanton	03/03

SAN DIEGO REGIONAL STANDARD DRAWING

CONCRETE ENERGY DISSIPATOR
[REINFORCEMENT]
36" TO 72" DIAMETER PIPE

RECOMMENDED BY THE SAN DIEGO REGIONAL STANDARDS COMMITTEE

T. Stanton 3/10/2003

Chairperson R.C.E. 19246 Date

DRAWING NUMBER D-43B

This drawing is NOT in conformance with latest UBC and should be used with care and judgment.

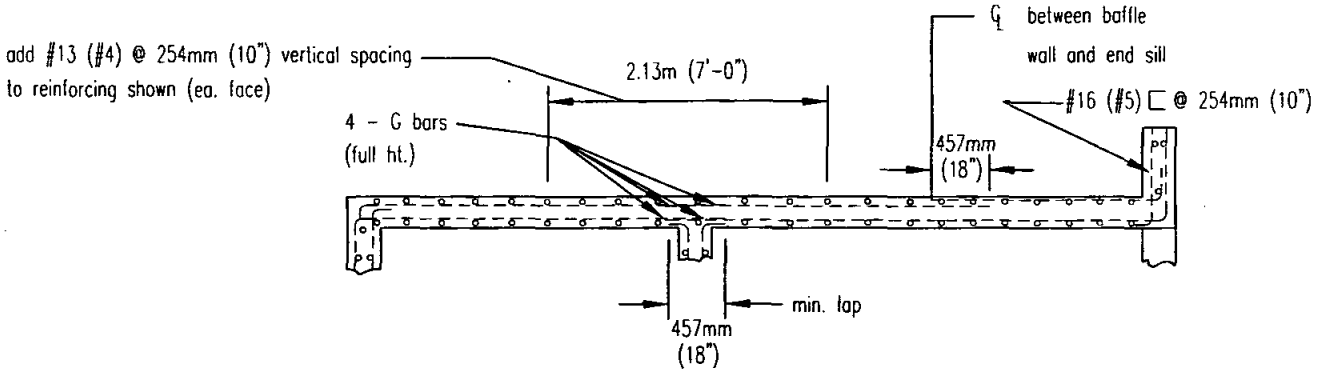

SECTION D–D

Pipe dia. (in.)	914mm (36")	1.07m (42")	1.22m (48")	1.37m (54")	1.52m (60")	1.83m (72")
A bar	#16 (# 5) @ 305mm (12")		#19 (#6) @ 305mm (12")		#22 (#7) @ 305mm (12")	
B bar	#16 (# 5) @ 305mm (12")		#19 (#6) @ 305mm (12")			
C bar	#13 (# 4) @ 305mm (12")		#16 (#5) @ 305mm (12")			
D bar	#13 (# 4) @ 305mm (12")		#16 (#5 @ 305mm (12")		#19 (#6) @ 305mm (12")	
E bar	#13 (# 4) @ 305mm (12")		#16 (#5 @ 305mm (12")			
F bar	#13 (# 4) @ 229mm (9")		#16 (#5 @ 229mm (9")			#19 (#6) @ 229mm (9")
G bar	#22 (# 7)			#36 (# 11)		

NOTES

1. Match location of sidewall reinforcing.
2. Dowels having same size and spacing as wall reinforcing may be used in lieu of continuous bars at contractors option.
3. Match location of headwall or end sill reinforcing.

Revision	By	Approved	Date
ORIGINAL		Kercheval	12/75
Add Metric		T. Stanton	03/03

SAN DIEGO REGIONAL STANDARD DRAWING

CONCRETE ENERGY DISSIPATOR
[REINFORCEMENT]
36" TO 72" DIAMETER PIPE

RECOMMENDED BY THE SAN DIEGO REGIONAL STANDARDS COMMITTEE

T. Stanton 3/10/2003

Chairperson R.C.E. 19246 Date

DRAWING NUMBER D-43C

This drawing is NOT in conformance with latest UBC and should be used with care and judgment.

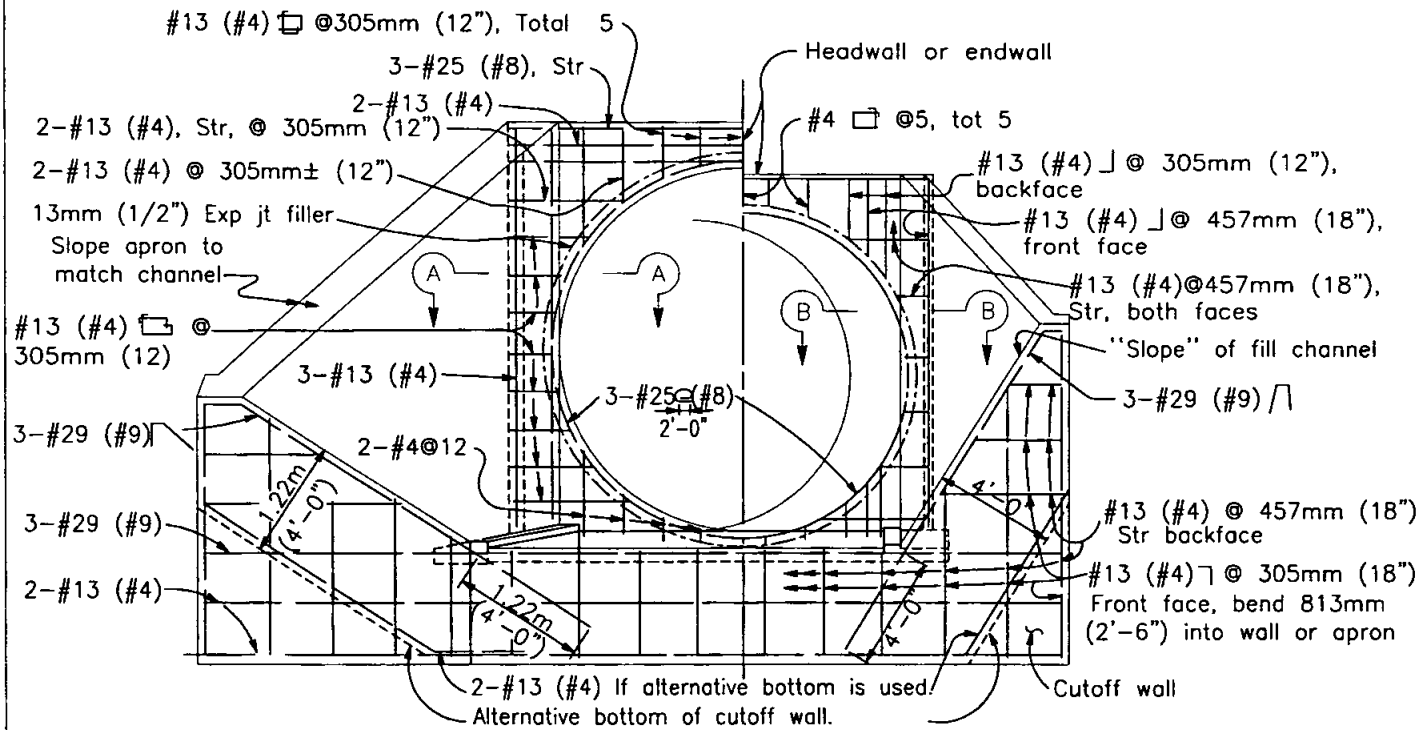

TYPICAL FOR MAXIMUM "H" >3.05m (10') TYPICAL FOR MAXIMUM "H" < 3.05m (10')

END ELEVATION

If at upstream end, fillet is not shown

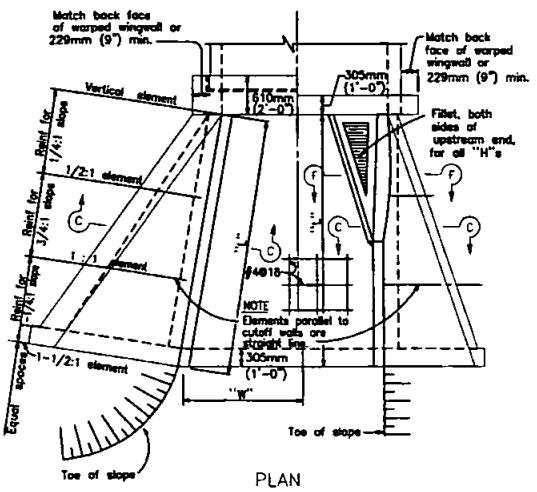

PLAN

Revision	By	Approved	Date
ORIGINAL		Kercheval	12/75
Add Metric		T. Stanton	03/03

SAN DIEGO REGIONAL STANDARD DRAWING

PIPE CULVERT - HEADWALLS
ENDWALLS & WARPED WINGWALLS

RECOMMENDED BY THE SAN DIEGO REGIONAL STANDARDS COMMITTEE

T. Stanton 3/01/2003

Chairperson R.C.E. 19246 Date

DRAWING NUMBER D-44A

This drawing is NOT in conformance with latest UBC and should be used with care and judgment.

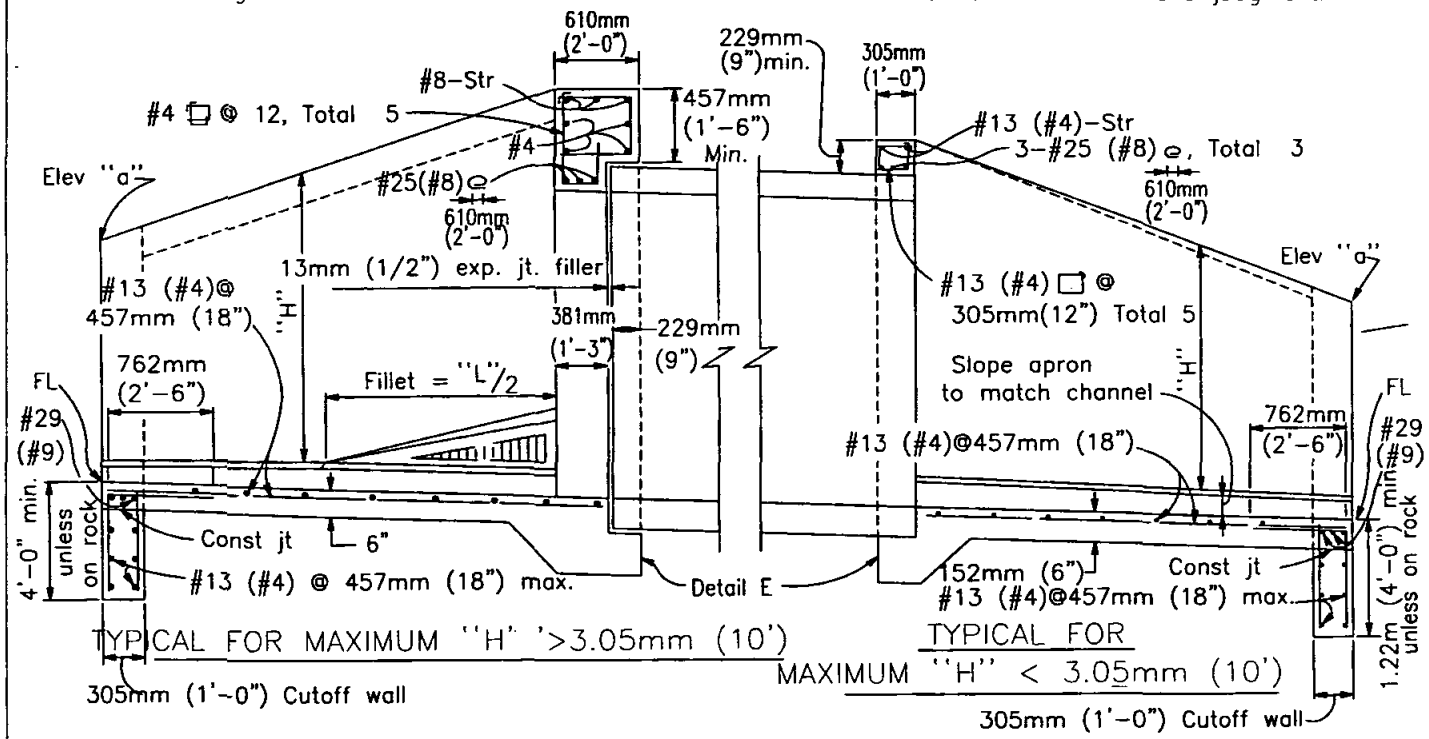

PART LONGITUDINAL SECTION

NOTE

RCP shown. Metal pipe similar except eliminate the expansion joint and use hook bolts @ 19"± spacing. Size and length provided by manufacturer.

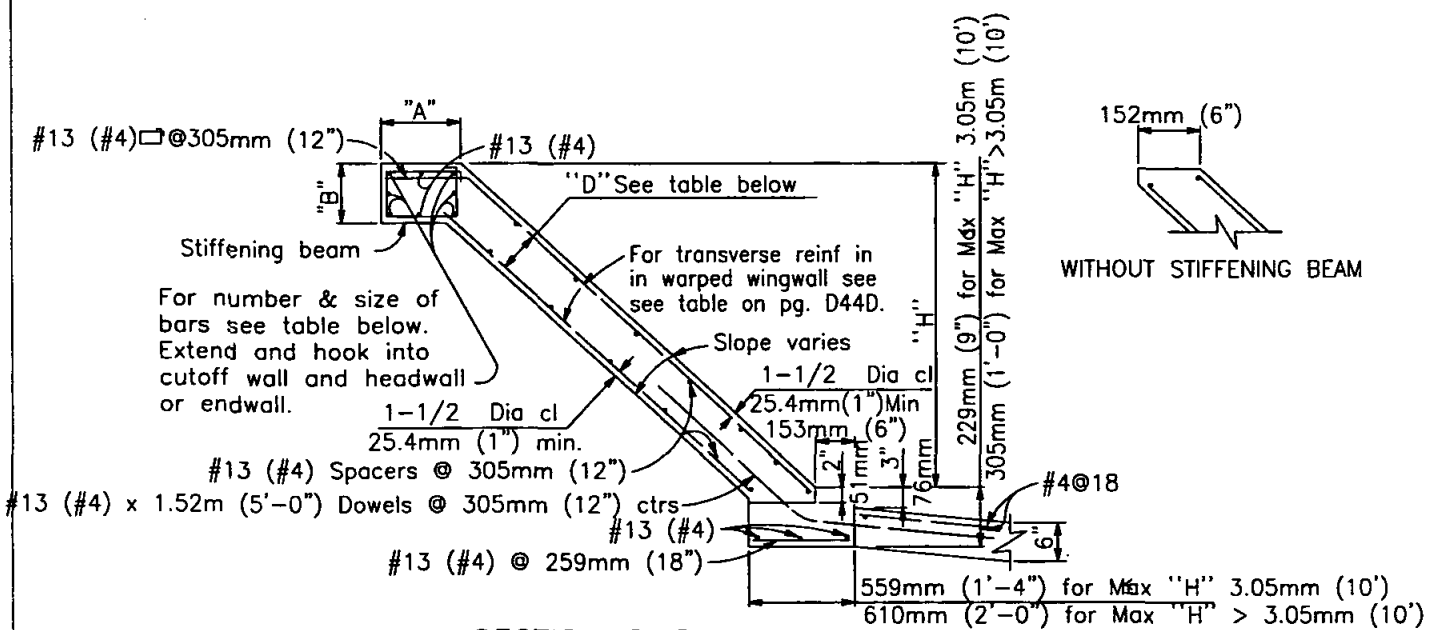

SECTION C-C

Where abrasion is anticipated, increase apron thickness to 178mm (7") minimum to provide 51mm (2") minimum reinforcement coverage.

Revision	By	Approved	Date
ORIGINAL		Kercheval	12/75
Add Metric		T. Stanton	03/03

SAN DIEGO REGIONAL STANDARD DRAWING

PIPE CULVERT - HEADWALLS
ENDWALLS & WARPED WINGWALLS

RECOMMENDED BY THE SAN DIEGO REGIONAL STANDARDS COMMITTEE

T. Stanton 3/10/2003

Chairperson R.C.E. 19246 Date

DRAWING NUMBER D-44B

This drawing is NOT in conformance with latest UBC and should be used with care and judgment.

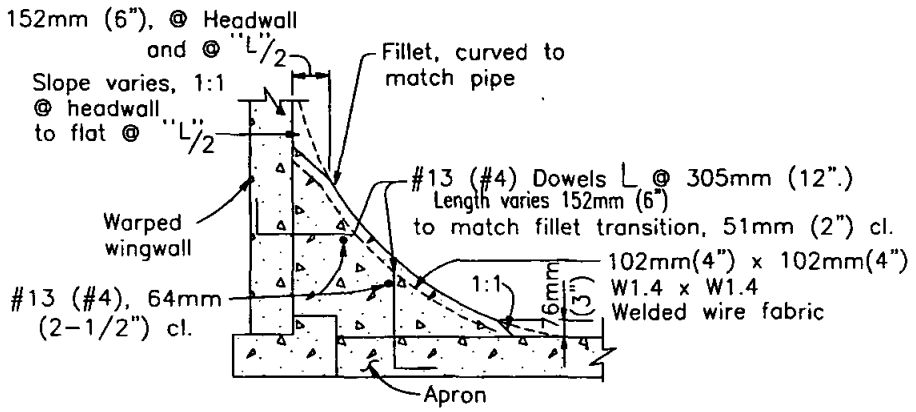

SECTION F-F

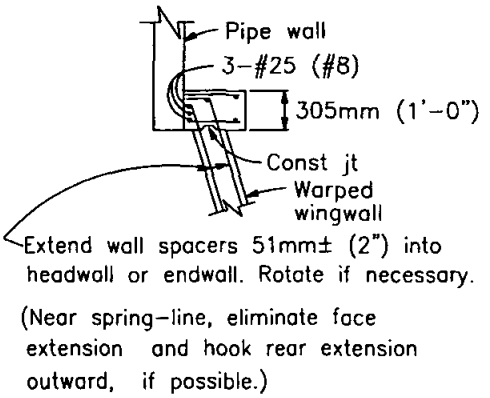

SECTION B-B

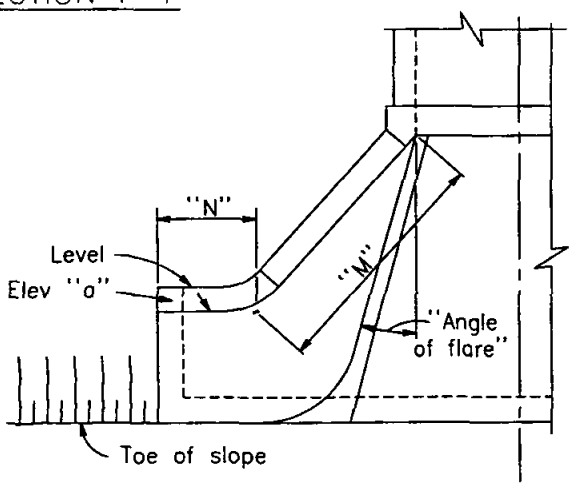

ALTERNATIVE WARPED WINGWALL

Use where additional protection to toe of embankment is required. If at upstream end, fillet is not shown.

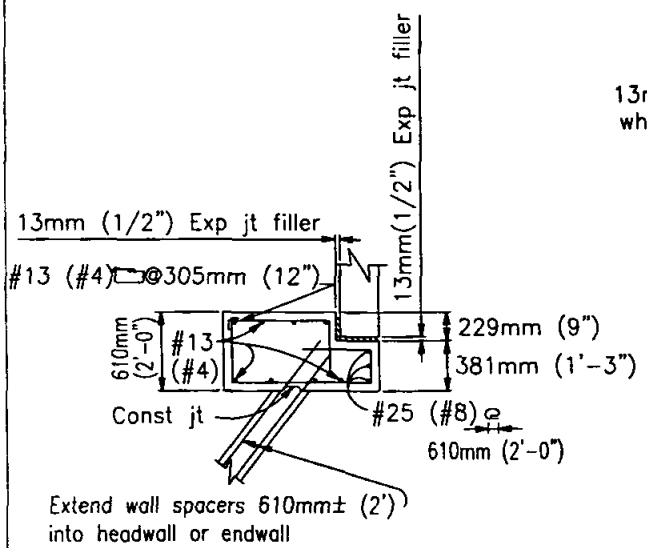

SECTION A-A

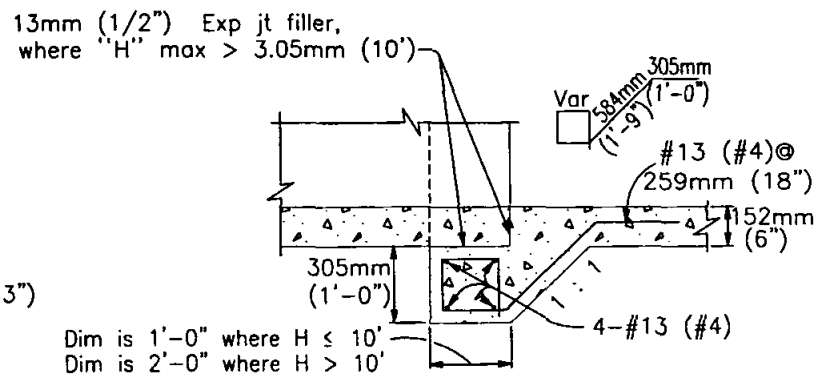

DETAIL E

Revision	By	Approved	Date
ORIGINAL		Kercheval	12/75
Add Metric		T. Stanton	03/03

SAN DIEGO REGIONAL STANDARD DRAWING

PIPE CULVERT - HEADWALLS
ENDWALLS & WARPED WINGWALLS

RECOMMENDED BY THE SAN DIEGO REGIONAL STANDARDS COMMITTEE

T. Stanton 3/10/2003

Chairperson R.C.E. 19246 Date

DRAWING NUMBER D-44C

Revision	By	Approved	Date
ORIGINAL		Kercheval	12/75
Add Metric		T. Stanton	03/03

SAN DIEGO REGIONAL STANDARD DRAWING

PIPE CULVERT – HEADWALLS
ENDWALLS & WARPED WINGWALLS

WARPED WINGWALLS – IMPERIAL (All measurements in Feet and/or Inches unless otherwise noted)

WALL DIMENSIONS AND REINFORCING

Element Slope	"H"	8'or less	10'	12'	14'	16'	18'	20'
1/4:1	Front face reinf	#4@12	#4@ 7	#5@ 7	#5@ 5	#6@ 6	#7@ 7	#7@ 6
	Rear face reinf	#4@12	#4@12	#4@12	#4@12	#4@12	#4@12	#4@12
3/4:1	Front face reinf	#4@12	#4@12	#4@12	#4@12	#4@10	#4@ 8	#4@ 6
	Rear face reinf	#4@12	#4@12	#4@12	#4@10	#4@ 7	#4@ 6	#5@ 8
1-1/4:1	Front face reinf	#4@12	#4@12	#4@12	#4@12	#4@12	#4@12	#4@12
	Rear face reinf	#4@ 8	#4@ 8	#4@ 5	#5@ 6	#6@ 7	#6@ 6	#7@ 6
"D" at Cutoff Wall		6"	6"	6"	7-1/2"	8"	9-1/2"	11"
"D" at Culvert		6"	6"	6"	8"	9-1/2"	11"	1'-1"

STIFFENING BEAM DIMENSIONS AND REINFORCING

"H" max \ "L"	12'	14'	16'	18'	20'	25'	30'	35'	40' or more
6'	No beam. Place 2-#6 in each face along top of wall.								
8'		"A"= 1'-0"							
10'		"B"= 9"							
12'			"A"= 1'-6"						
14'	Total 6-#6		"B"= 1'-0"			"A"= 1'-10"			
16'				Total 6-#7		"B"=1'-0"	"A"=2'-0"		
18'						Total 6-#8	"B"= 1'-6"		
20'							Total 8-#9		

WARPED WINGWALLS – METRIC (All measurements in Millimeters unless otherwise noted)

WALL DIMENSIONS AND REINFORCING

Element Slope	"H"	2.44m or less	3.05m	3.66m	4.27	4.88m	5.59m	6.10m
1/4:1	Front face reinf	#13@305	#13@178	#16@178	#16@127	#19@152	#22@178	#22@152
	Rear face reinf	#13@305	#13@305	#13@305	#13@305	#13@305	#13@305	#13@305
3/4:1	Front face reinf	#13@305	#13@305	#13@305	#13@305	#13@254	#13@203	#13@152
	Rear face reinf	#13@305	#13@305	#13@305	#13@254	#13@178	#13@152	#16@203
1-1/4:1	Front face reinf	#13@305	#13@305	#13@305	#13@305	#13@305	#13@305	#13@305
	Rear face reinf	#13@203	#13@203	#13@127	#16@152	#19@178	#19@152	#22@152
"D" at Cutoff Wall		152	152	152	191	203	241	279mm
"D" at Culvert		152	152	152	203	241	279	330

STIFFENING BEAM DIMENSIONS AND REINFORCING

"H" max \ "L"	3.66m	3.27m	4.88m	5.49m	6.10m	7.62m	9.14m	10.7m	12m or more
1.83m	No beam. Place 2-#13 in each face along top of wall.								
2.43m		"A"= 305							
3.05m		"B"= 229							
3.66m			"A"= 457						
4.27m	Total 6-#19		"B"= 305			"A"= 559			
4.88m				Total 6-#22		"B"=305	"A"=610		
5.49m						Total 6-#25	"B"= 457		
6.10m							Total 8-#29		

NOTES

Walls designed for 610mm (2') surcharge; earth density = 55kg / 0.029 cu m (120 # / cu. ft.) ; equivalent fluid pressure = 16.4kg / cu m (36 #/cu. ft.) Vary "D" of warped wall uniformly from that at cutoff wall to that at culvert, for maximum "H" > 3.65m (12'). Dimensions "L", "W", "H", "M".

RECOMMENDED BY THE SAN DIEGO REGIONAL STANDARDS COMMITTEE

Chairperson R.C.E. 19246 Date 3/01/2003

DRAWING NUMBER D-44D

This drawing is NOT in conformance with latest UBC and should be used with care and judgment.

This drawing is NOT in conformance with latest UBC and should be used with care and judgment.

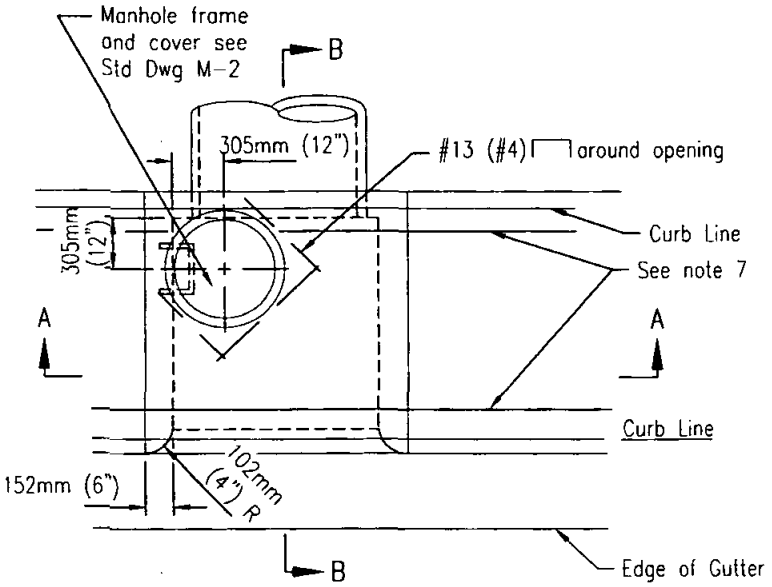

PLAN

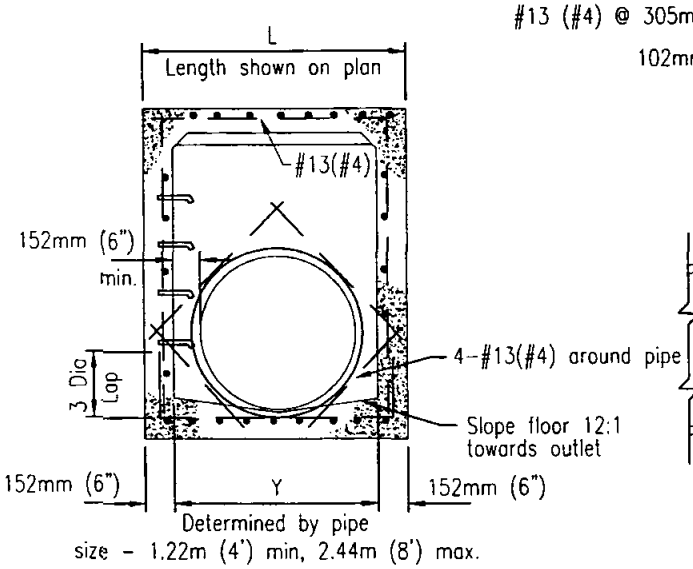

SECTION A-A

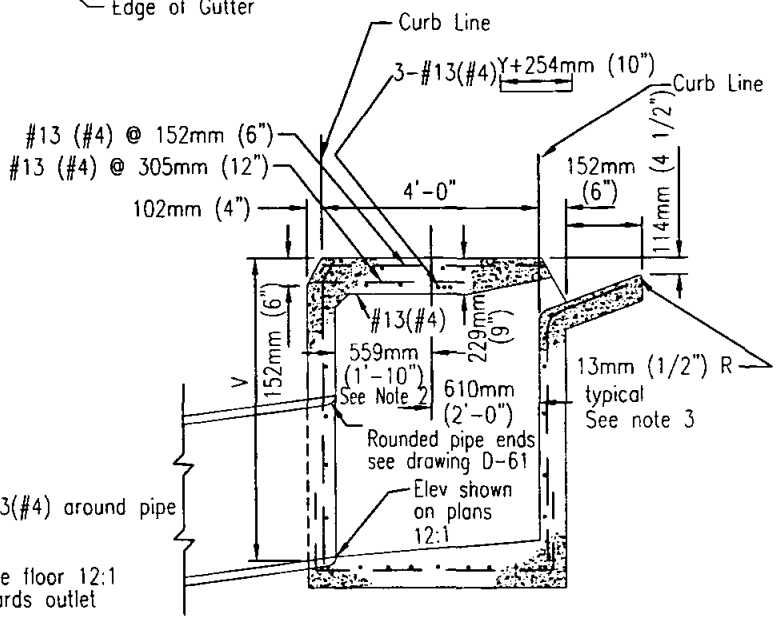

SECTION B-B

NOTES

1. See Standard Drawings D-11 & D-12 for additional notes and details.
2. Dimension shown becomes 610mm (2'-0") when opening on both sides. Adjust manhole as required.
3. Exposed edges of concrete shall be rounded with a radius of 13mm (1/2")
4. When V exceeds 1,22mm (4') steps shall be installed. See Standard Drawing D-11 for details.
5. Concrete gutter to match adjacent gutters.
6. An expansion joint shall be placed at the ends of the inlet where the curb is to adjoin.
7. Provide 6.35mm (1/4") tooled groove in top slab in line with back of adjacent curb.
8. Maintain 3.81mm (1 1/2") clear spacing between reinforcing and surface unless otherwise noted.

LEGEND ON PLANS

Revision	By	Approved	Date
ORIGINAL		H. Hecht	10/82
Add Metric		T. Stanton	03/03

SAN DIEGO REGIONAL STANDARD DRAWING

MEDIAN CURB INLET - TYPE J

RECOMMENDED BY THE SAN DIEGO REGIONAL STANDARDS COMMITTEE

T. Stanton 3/10/2003

Chairperson R.C.E. 19246 Date

DRAWING NUMBER D-45

This drawing is NOT in conformance with latest UBC and should be used with care and judgment.

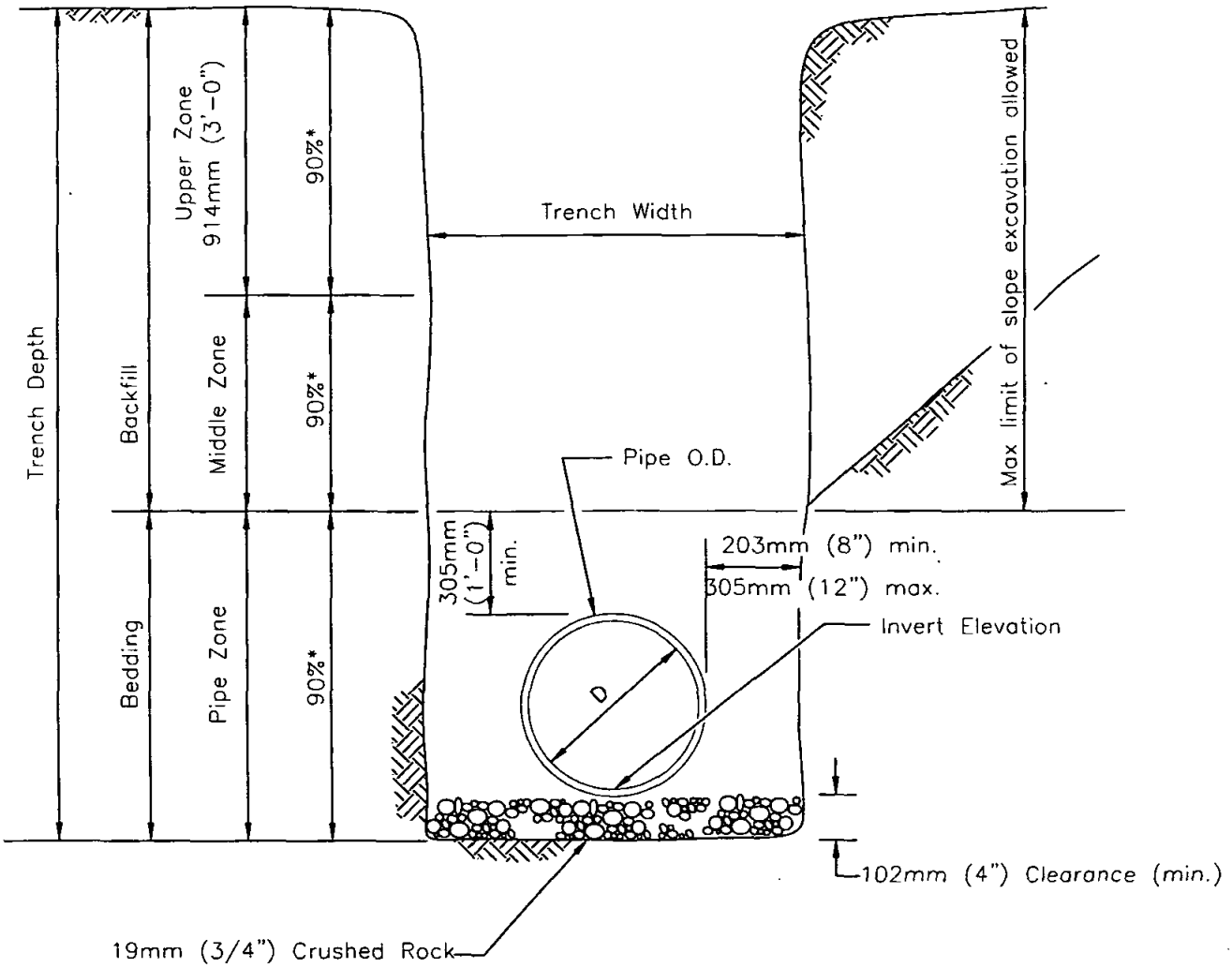

SECTION

NOTES
1. For trenching on improved streets see Standard Drawing G-24 or G-25 for resurfacing details.
2. (*) indicates minimum relative compaction.

Revision	By	Approved	Date
ORIGINAL		Parkinson	2/95
Add Metric		T. Stanton	03/03

SAN DIEGO REGIONAL STANDARD DRAWING

PIPE BEDDING AND TRENCH BACKFILL FOR STORM DRAINS

RECOMMENDED BY THE SAN DIEGO REGIONAL STANDARDS COMMITTEE

T. Stanton 3/01/2003

Chairperson R.C.E. 19246 Date

DRAWING NUMBER D-60

This drawing is NOT in conformance with latest UBC and should be used with care and judgment.

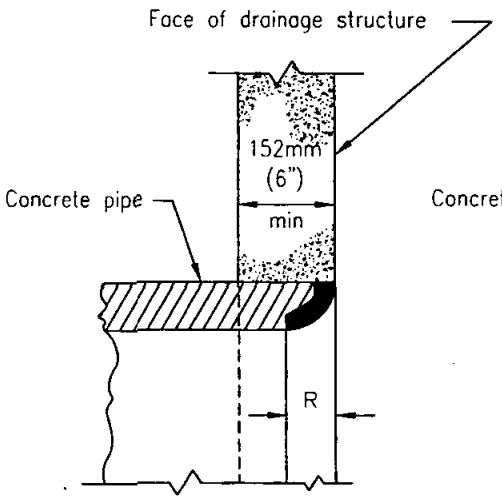

BELL END

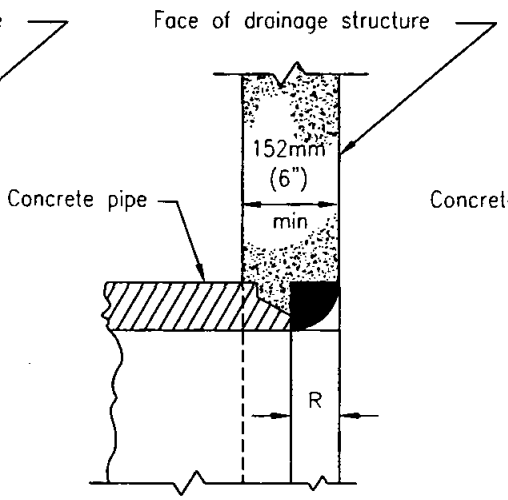

SPIGOT END

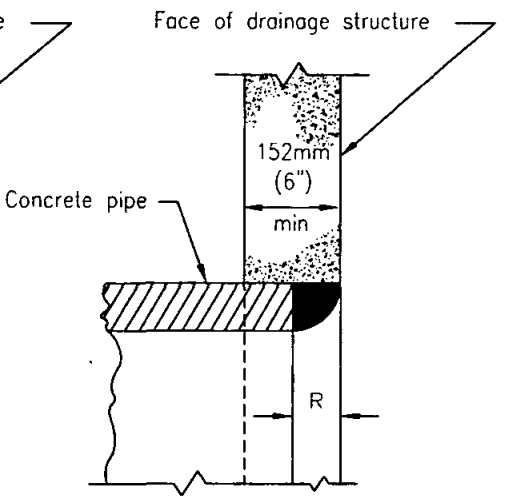

CUT END

R = Thickness of pipe

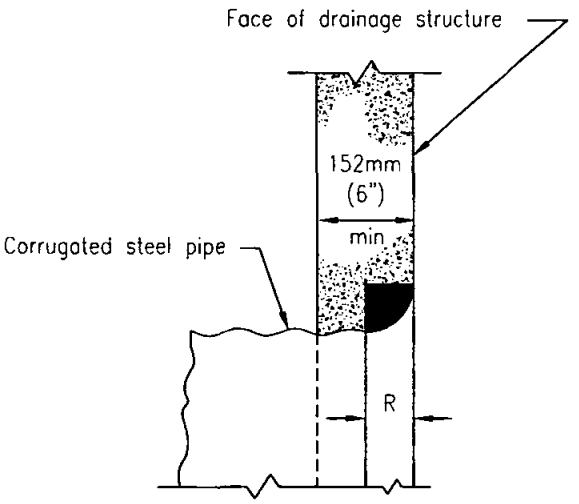

CUT END

NOTE

The rounded areas may be built up of cement mortar or poured in place with the drainage structure.

$$R = \frac{\text{Inside diameter of pipe}}{10}$$

Revision	By	Approved	Date
ORIGINAL		Kercheval	12/75
Add Metric		T. Stanton	03/03

SAN DIEGO REGIONAL STANDARD DRAWING

ROUNDED PIPE ENDS IN DRAINAGE STRUCTURES

RECOMMENDED BY THE SAN DIEGO REGIONAL STANDARDS COMMITTEE

T. Stanton 3/10/2003

Chairperson R.C.E. 19246 Date

DRAWING NUMBER D-61

This drawing is NOT in conformance with latest UBC and should be used with care and judgment.

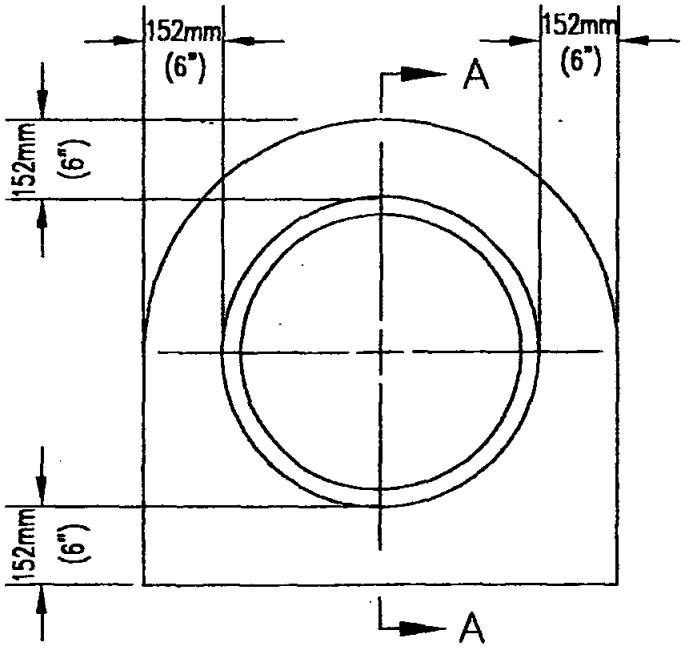

ELEVATION

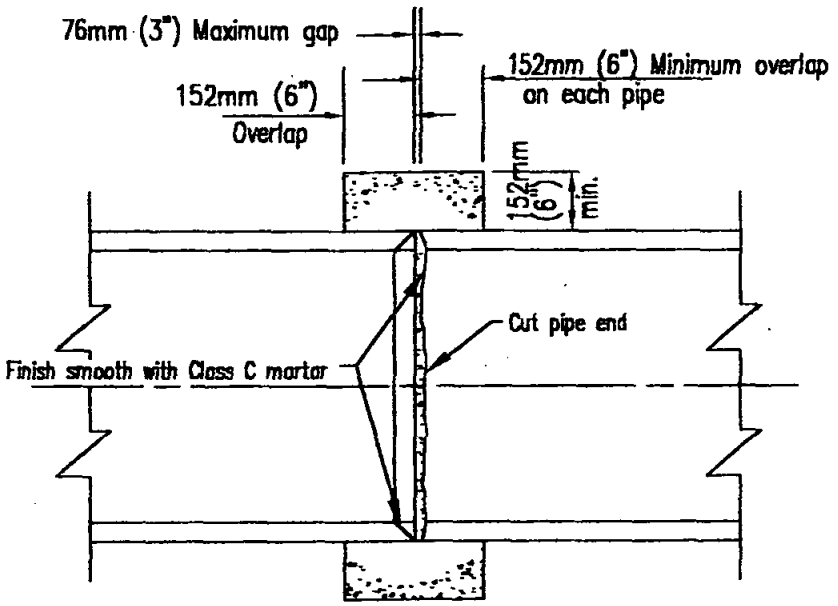

SECTION A–A

NOTES

1. Pipe collar does not have to be finished if covered.
2. Concrete shall be 332 kg/M^3 –C–22Mpa (560–C–3250)
3. Where gap exceeds 76mm (3") but is not more than 152mm (6") an internal form shall be used.

LEGEND ON PLANS

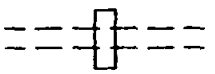

Revision	By	Approved	Date
ORIGINAL		Kercheval	12/75
Add Metric		T. Stanton	03/03

SAN DIEGO REGIONAL STANDARD DRAWING

PIPE COLLAR

RECOMMENDED BY THE SAN DIEGO REGIONAL STANDARDS COMMITTEE

3/01/2003

Chairperson R.C.E. 19246 Date

DRAWING NUMBER D–62

This drawing is NOT in conformance with latest UBC and should be used with care and judgment.

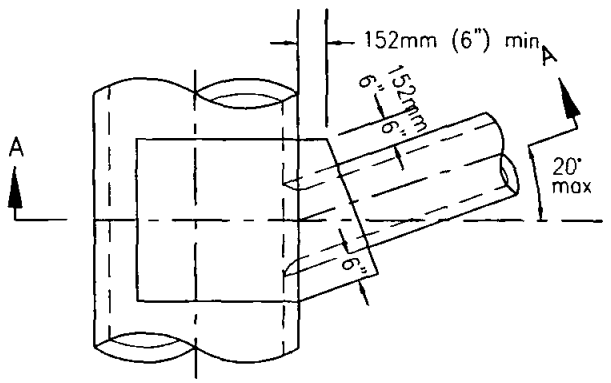

PLAN
SKEWED CONNECTION

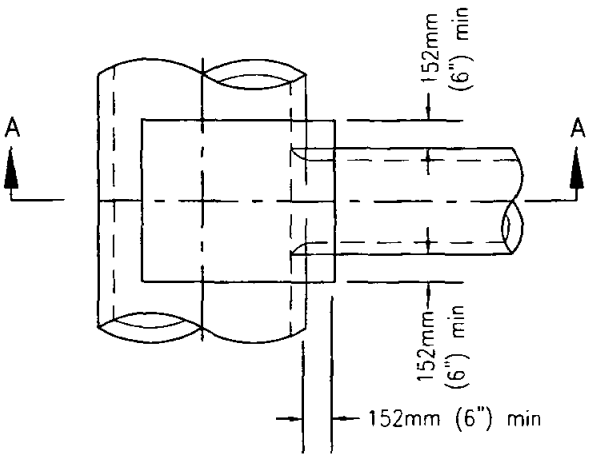

PLAN

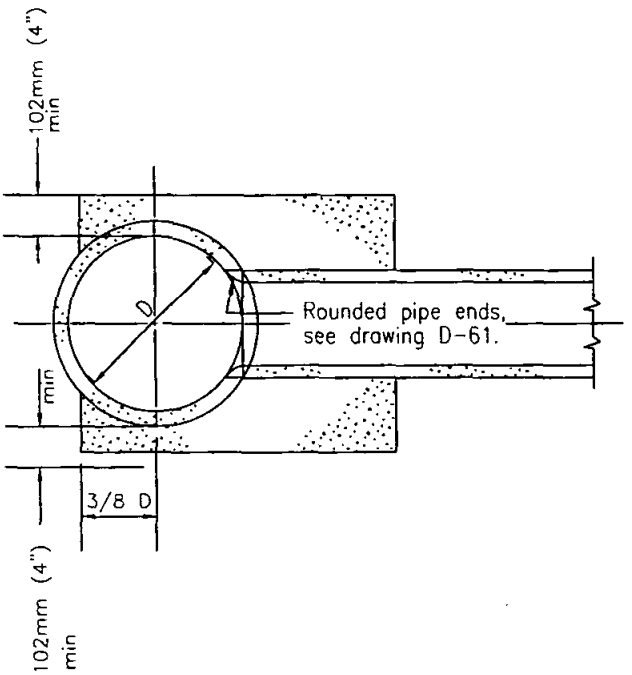

SECTION A–A

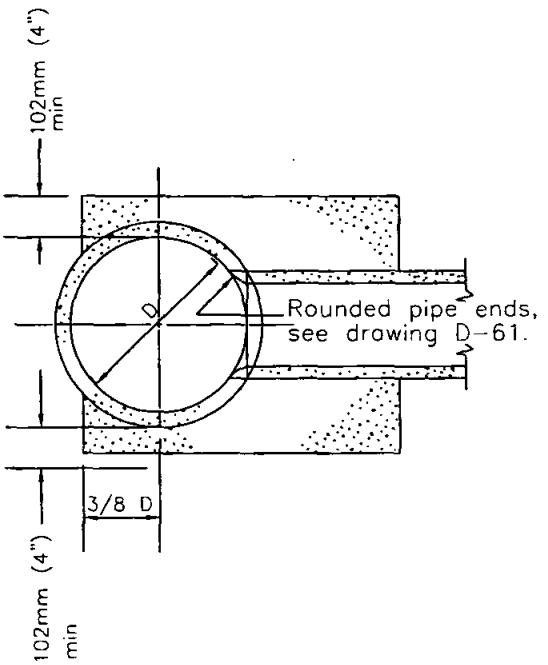

SECTION B–B

NOTES

1. The end of connecting pipe shall not project into the waterway of the larger pipe.
2. The larger pipe shall not be less than 610mm (24") ID.
3. The smaller pipe shall not be more than 2/3 the size of the larger pipe.
4. Concrete shall be 279kg/M^3 –C–14–Mpa (470–C–2000).

LEGEND ON PLANS

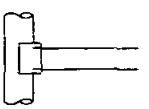

Revision	By	Approved	Date
ORIGINAL		Kercheval	12/75
Add Metric		T. Stanton	03/03

SAN DIEGO REGIONAL STANDARD DRAWING

CONCRETE LUG

RECOMMENDED BY THE SAN DIEGO REGIONAL STANDARDS COMMITTEE

T. Stanton 3/01/2003

Chairperson R.C.E. 19246 Date

DRAWING NUMBER D-63

This drawing is NOT in conformance with latest UBC and should be used with care and judgment.

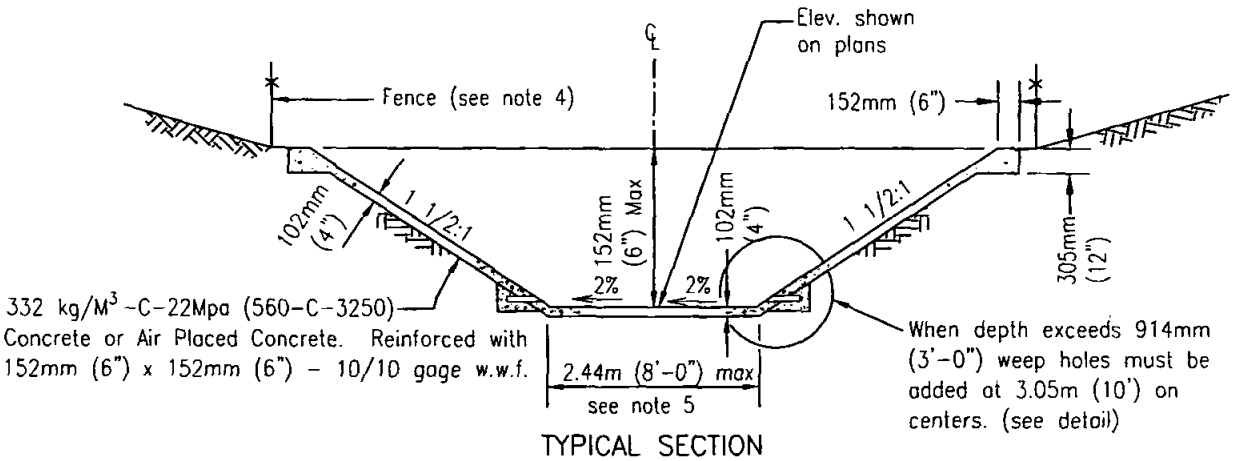

TYPICAL SECTION

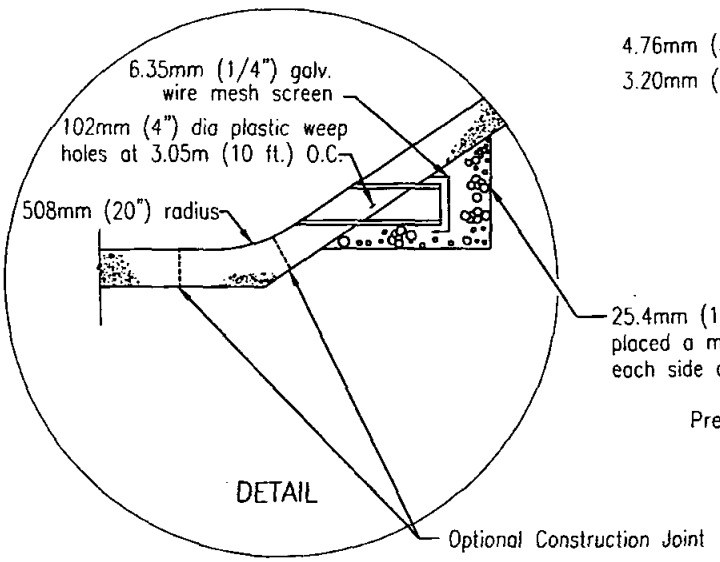

DETAIL

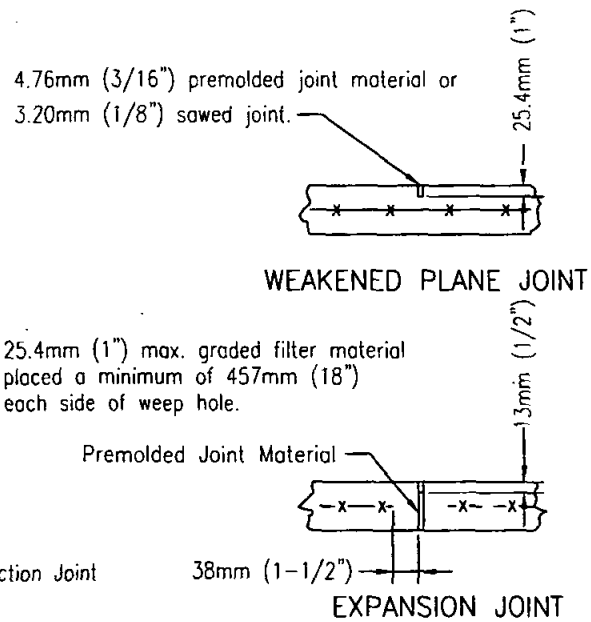

WEAKENED PLANE JOINT

EXPANSION JOINT

NOTES

1. A.C. or clay pipe may be substituted for plastic pipe at weep holes.
2. Weakened plane joints shall be placed every 3.66m (12') to 4.57m (15'). Expansion joints shall be placed at all changes of section and at ends of curves.
3. Cutoff walls shall be constructed at each end of the channel along the full width of section. See Standard Drawing D-72.
4. Chainlink fence shall be as required by Agency.
5. For bottom widths greater than 2.44m (8 feet) see Standard Drawing D-71.
6. Reinforcement shown is minimum.

LEGEND ON PLANS

Revision	By	Approved	Date
ORIGINAL		Kercheval	12/75
Add Metric		T. Stanton	03/03

SAN DIEGO REGIONAL STANDARD DRAWING

MINOR DRAINAGE CHANNEL

RECOMMENDED BY THE SAN DIEGO REGIONAL STANDARDS COMMITTEE

T. Stanton 3/10/2003

Chairperson R.C.E. 19246 Date

DRAWING NUMBER D-70

This drawing is NOT in conformance with latest UBC and should be used with care and judgment.

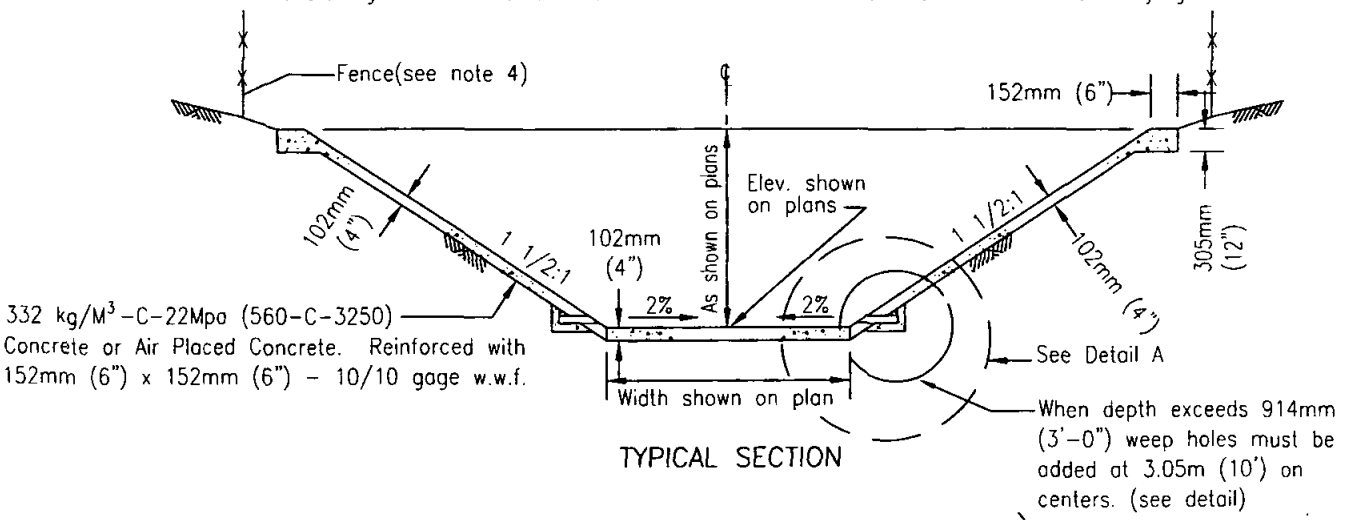

TYPICAL SECTION

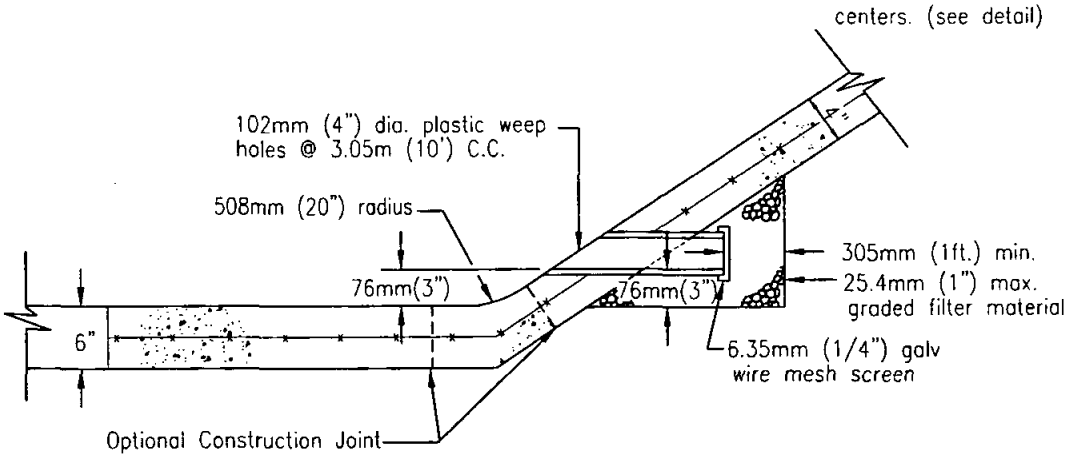

DETAIL A

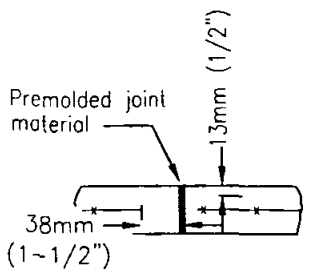

EXPANSION JOINT

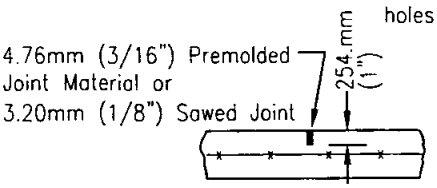

WEAKENED PLANE JOINT

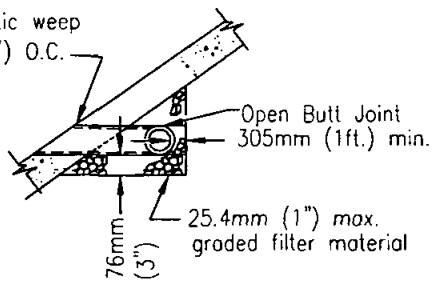

ALTERNATE CONTINUOUS DRAIN

NOTES

1. A.C. or clay pipe may be substituted for plastic pipe at weep holes.
2. *Weakened plane joints shall be placed every 3.66m (12') to 4.57m (15'). Expansion* joints shall be placed at all changes of section and at ends of curves.
3. Cutoff walls shall be constructed at each end of the channel along the full width of section. See Standard Drawing D-72.
4. Chainlink fence shall be as required by Agency.
5. Reinforcement shown is minimum.

LEGEND ON PLANS

Revision	By	Approved	Date
ORIGINAL		Kercheval	12/75
Add Metric		T. Stanton	03/03

SAN DIEGO REGIONAL STANDARD DRAWING

MAJOR DRAINAGE CHANNEL

RECOMMENDED BY THE SAN DIEGO REGIONAL STANDARDS COMMITTEE

T. Stanton 3/10/2003

Chairperson R.C.E. 19246 Date

DRAWING NUMBER D-71

This drawing is NOT in conformance with latest UBC and should be used with care and judgment.

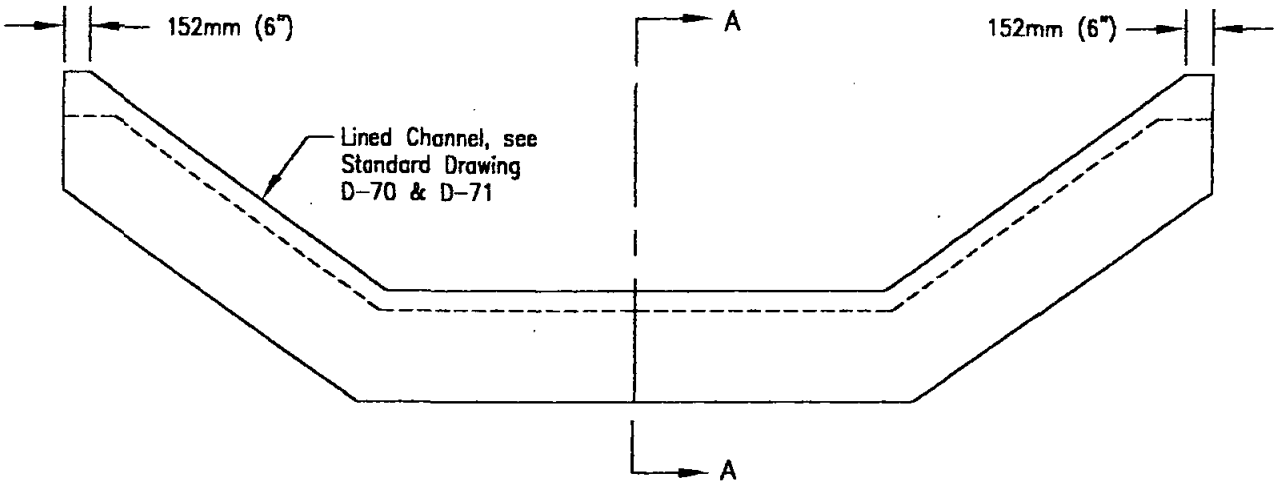

ELEVATION

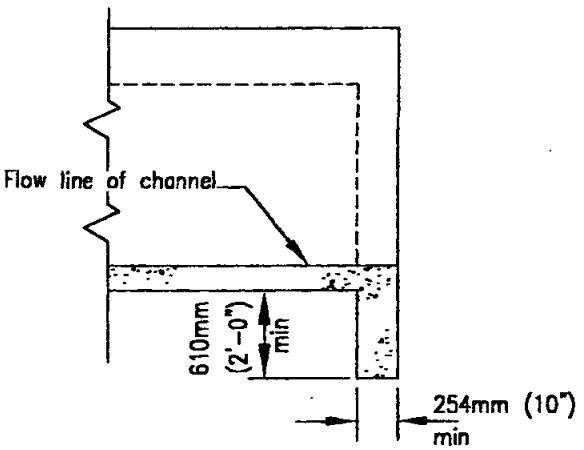

SECTION A-A

NOTES

1. Thickness and wall depth shall be as shown on plan.
2. Reinforcing in cut off wall shall be the same as that required in channel.
3. Concrete shall be 332 kg/M^3-C-22Mpa (560-C-3250).

LEGEND ON PLANS

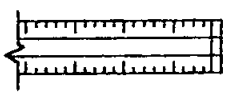

Revision	By	Approved	Date
ORIGINAL		Kercheval	12/75
Add Metric		T. Stanton	03/03

SAN DIEGO REGIONAL STANDARD DRAWING

CUTOFF WALL FOR DRAINAGE CHANNEL

RECOMMENDED BY THE SAN DIEGO REGIONAL STANDARDS COMMITTEE

T. Stanton 3/01/2003

Chairperson R.C.E. 19246 Date

DRAWING NUMBER D-72

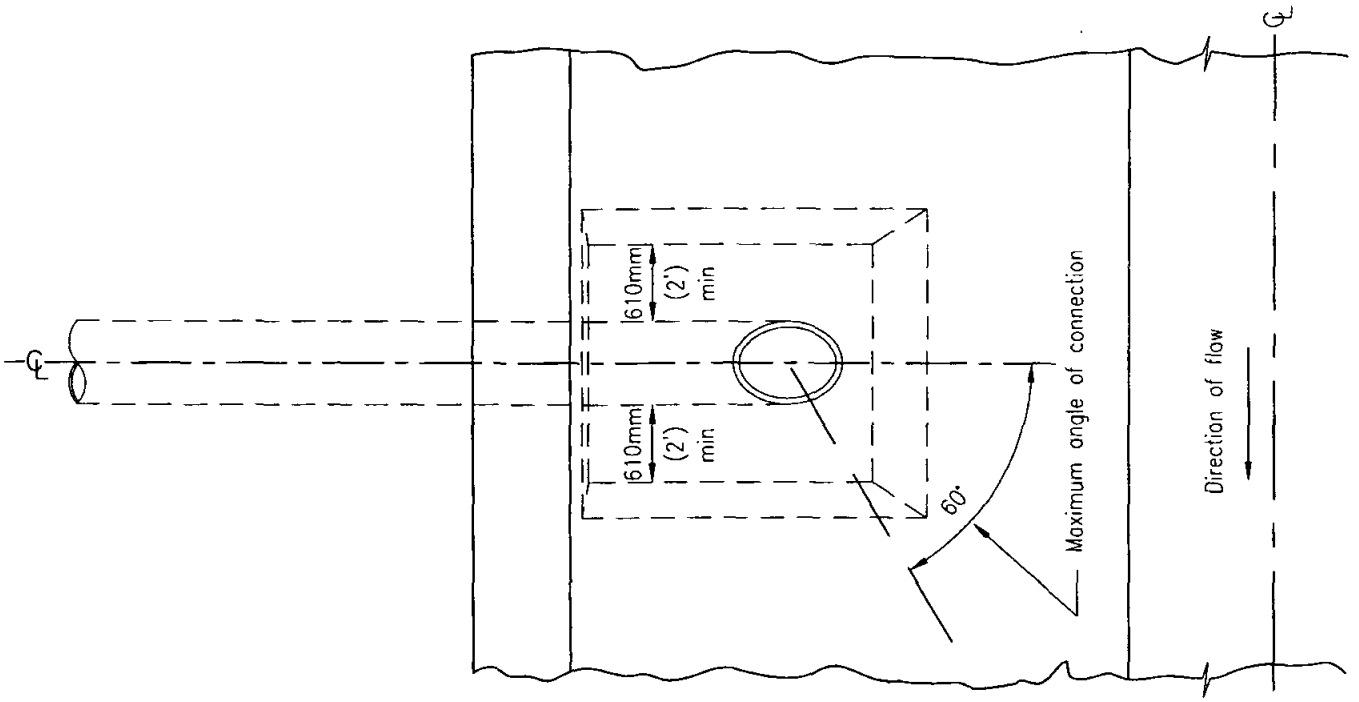

PLAN

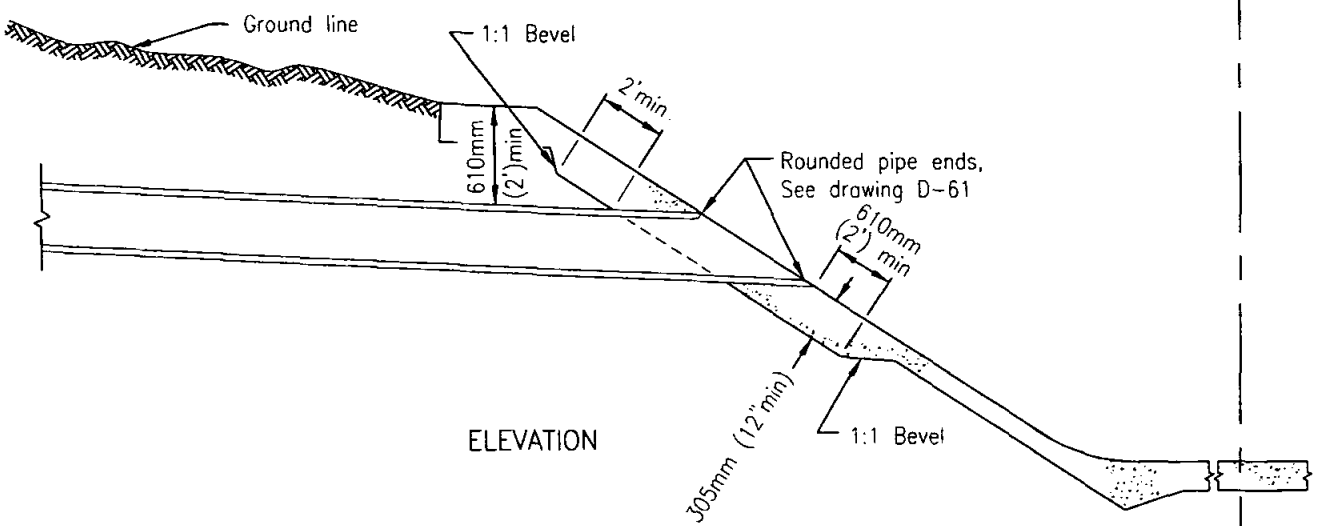

ELEVATION

NOTES

1. Concrete shall be 332 kg/M^3-C-22Mpa (560-C-3250).
2. Pipe shall connect to channel as high as possible.
3. The maximum angle of connection is 60° downstream. In no case shall a pipe angle upstream.

LEGEND ON PLANS

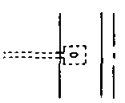

Revision	By	Approved	Date
ORIGINAL		Kercheval	12/75
Add Metric		T. Stanton	03/03

SAN DIEGO REGIONAL STANDARD DRAWING

PIPE TO CHANNEL CONNECTION

RECOMMENDED BY THE SAN DIEGO REGIONAL STANDARDS COMMITTEE

T. Stanton 3/10/2003

Chairperson R.C.E. 19246 Date

DRAWING NUMBER D-73

This drawing is NOT in conformance with latest UBC and should be used with care and judgment.

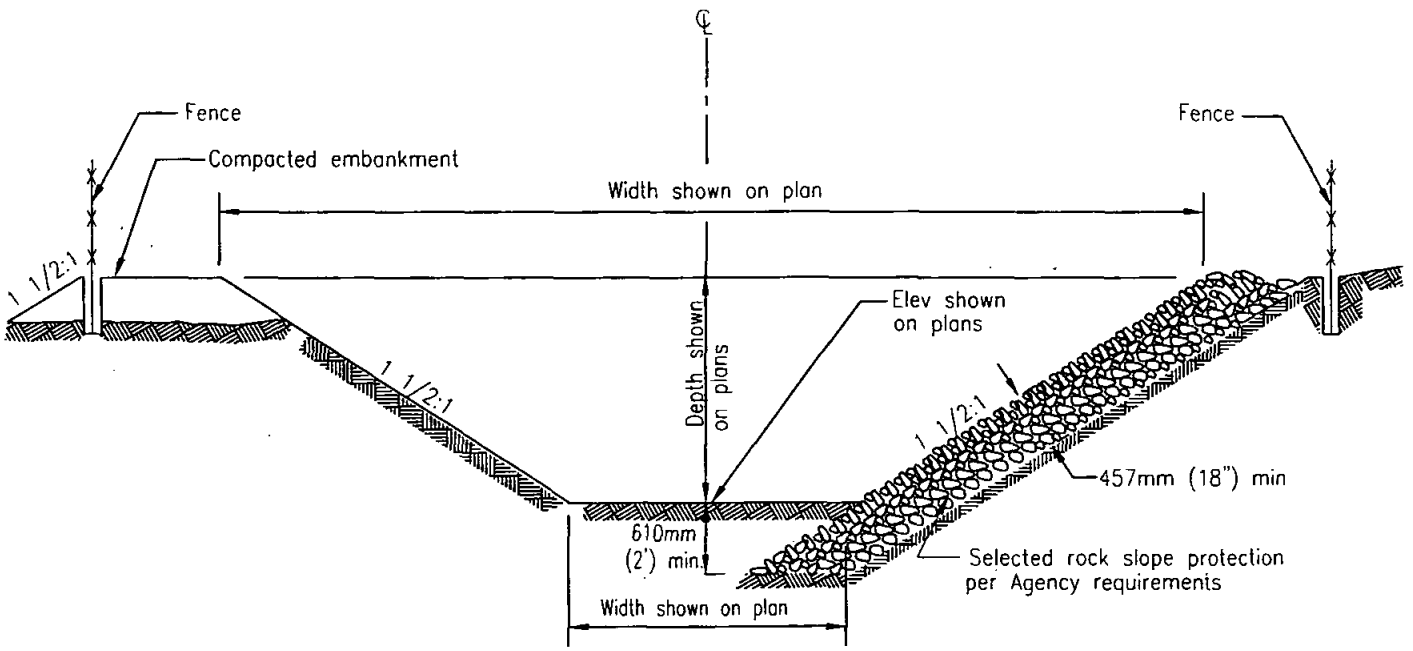

SECTION

NOTE

The following shall be as required by Agency:

a) Low flow channel
b) Filter blanket
c) Cutoff wall
d) Fence

LEGEND ON PLANS

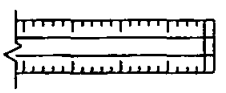

Revision	By	Approved	Date
ORIGINAL		Kercheval	12/75
Add Metric		T. Stanton	03/03

SAN DIEGO REGIONAL STANDARD DRAWING

GRADED EARTH CHANNEL

RECOMMENDED BY THE SAN DIEGO REGIONAL STANDARDS COMMITTEE

T. Stanton 3/10/2003

Chairperson R.C.E. 19246 Date

DRAWING NUMBER D-74

This drawing is NOT in conformance with latest UBC and should be used with care and judgment.

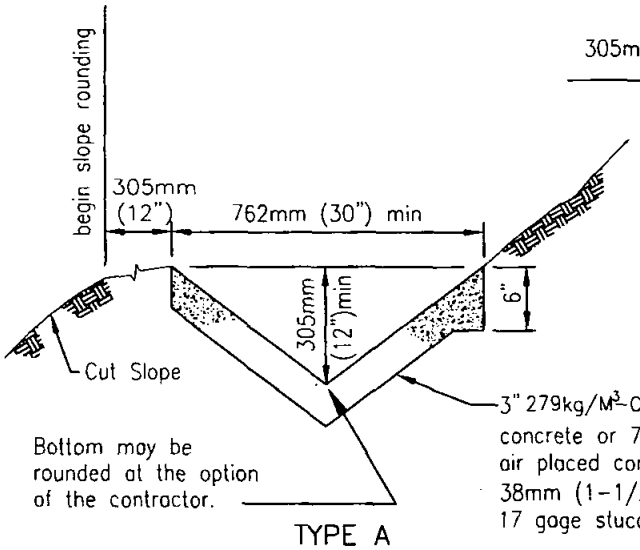

TYPE A

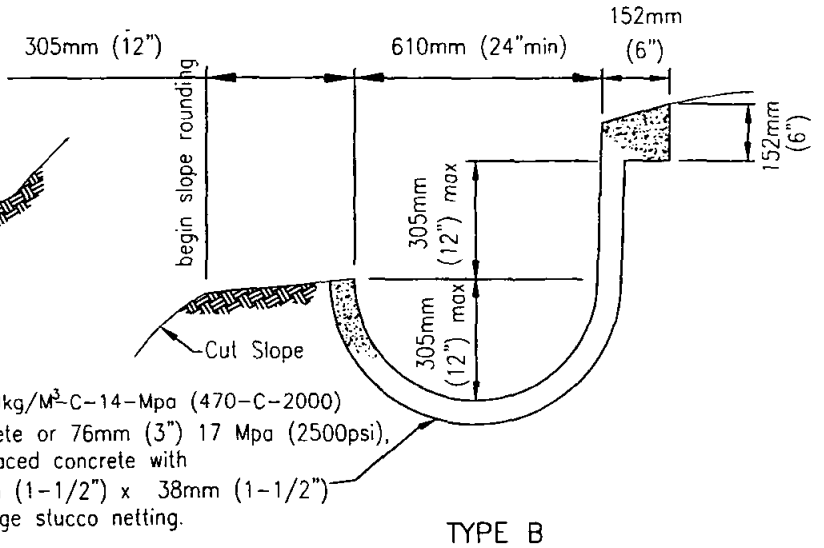

TYPE B

BROW DITCH

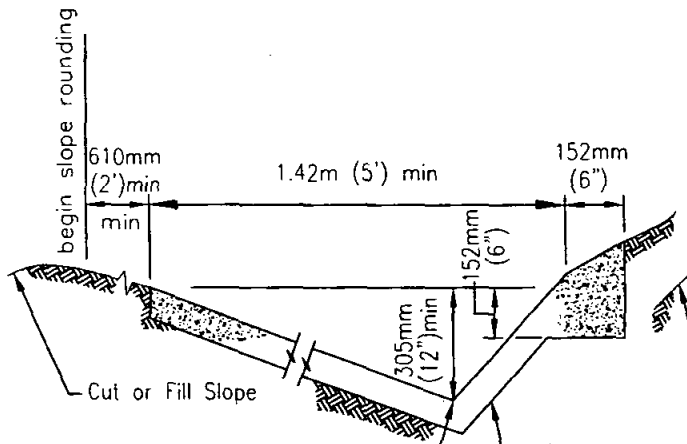

TYPE C

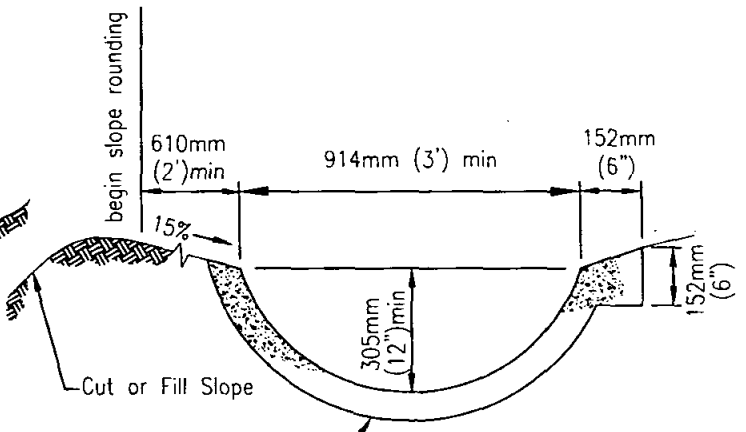

TYPE D

TERRACE DITCH

NOTES

1. Longitudinal slope of lined ditch shall be 2% minimum.
2. Over slope down ditches shall employ 152mm (6") thickened edge section at both sides of ditch.

LEGEND ON PLANS

Revision	By	Approved	Date
ORIGINAL		Kercheval	12/75
Add Metric		T. Stanton	03/03

SAN DIEGO REGIONAL STANDARD DRAWING

DRAINAGE DITCHES

RECOMMENDED BY THE SAN DIEGO REGIONAL STANDARDS COMMITTEE

T. Stanton 3/10/2003

Chairperson R.C.E. 19246 Date

DRAWING NUMBER D-75

Revision	By	Approved	Date
ORIGINAL		A.Kercheval	12/75
Add Metric		T. Stanton	03/03

SAN DIEGO REGIONAL STANDARD DRAWING

SINGLE BOX CULVERT
DETAILS No.1

METRIC TABLE - SPANS UP TO 1.22M (all measuements in millimeters unless otherwise noted).

SPAN			610		914			1.22m						1.52m											
HEIGHT			457	610	610	914		610	914		1.22m			610		914		1.22m				1.52m			
STRENGTH CLASSIFICATION			A	A	A	A	B	A	A	B	A	B	C	A	B	A	B	A	B	C	D	A	B	C	D
MAX FILL OVER TOP			1.68m		965	965	1.68m	711	711	940	711	940	1.27m	305	686	305	686	279	660	889	1.17m	279	635	889	1.17m
CONC.	Top Slab	T_1	152	152	159	159	203	178	178	203	178	203	229	191	203	191	203	191	203	241	267	191	203	241	267
CONC.	Bottom Slab	T_2	152	152	159	159	203	178	178	203	178	203	229	152	203	152	203	152	203	254	273	152	203	254	273
CONC.	Sidewalls	T_3	152	152	152	152	152	152	152	152	152	152	152	152	152	152	152	152	152	152	152	152	152	152	152
Reinforcing Steel	"a"	Size Bar "	13	13	13	13	16	16	16	16	16	16	19	16	16	16	16	16	16	19	19	16	16	19	19
Reinforcing Steel	"a"	Spacing	89	89	89	89	102	127	127	114	127	114	127	102	102	102	102	102	102	127	114	102	102	127	114
Reinforcing Steel	"a"	Length	965	965	1.27m	1.27m	1.3m	1.6m	1.6m	1.6m	1.6m	1.6m	1.57m	1.9m	1.9m	1.9m	1.9m	1.9m	1.9m	1.88m	1.88m	1.9m	1.9m	1.88m	1.88m
Reinforcing Steel	"d" Dist. Bars	Top Slab-No. of	2	2	3	3	2	3	5	3	3	3	3	7	3	7	3	7	3		3	7	3		3
Reinforcing Steel	"d" Dist. Bars	Bottom Slab-No. of	2	2	2	2	2	3	3		3		3	3		3		3			3	3	3		3
Reinforcing Steel	"e" Bars	Spacing	457	457	457	457	311	457	457	457	432	330	241	457	457	457	457	457	432	330	279	457	305	216	165
Reinforcing Steel	Spacers	Number	12	12	12	12		12	12		14			14		14		14				16			
QUAN.	Concrete: cubic meter per lin. ft.		13	13.8	17.6	20.7	23.7	22.2	25.3	27.6	27.6	30.6	32.9	24.5	28.3	27.6	31.2	30.6	33.7	39.0	41.3	32.9	34.5	42.1	43.6
QUAN.	Reinf. kg per lin. ft.		12.3	13.2	15.5	16.4	20.9	20.0	20.5	21.4	21.8	23.6	29.0	25.9	25.5	26.8	25.9	27.7	27.3	30.9	34.0	28.6	29.5	35.0	39.5

IMPERIAL TABLE - SPANS UP TO 5' (all measuements in feet and/or inches).

SPAN			2'		3'			4'						5'											
HEIGHT			1'-6"	2'	2'	3'		2'	3'		4'			2'		3'		4'				5'			
STRENGTH CLASSIFICATION			A	A	A	A	B	A	A	B	A	B	C	A	B	A	B	A	B	C	D	A	B	C	D
MAX FILL OVER TOP			66		38	38	66	28	28	37	28	37	50	12	27	12	27	11	26	35	46	11	25	35	46
CONC.	Top Slab	T_1	6	6	6 1/4	6 1/4	8	7	7	8	7	8	9	7 1/2	8	7 1/2	8	7 1/2	8	9 1/2	10 1/2	7 1/2	8	9 1/2	10 1/2
CONC.	Bottom Slab	T_2	6	6	6 1/4	6 1/4	8	7	7	8	7	8	9	6	8	6	8	6	8	10	10 3/4	6	8	10	10 3/4
CONC.	Sidewalls	T_3	6	6	6	6	6	6	6	6	6	6	6	6	6	6	6	6	6	6	6	6	6	6	6
Reinforcing Steel	"a"	Size Bar "	4	4	4	4	5	5	5	5	5	5	6	5	5	5	5	5	5	6	6	5	5	6	6
Reinforcing Steel	"a"	Spacing	3 1/2	3 1/2	3 1/2	3 1/2	4	5	5	4 1/2	5	4 1/2	5	4	4	4	4	4	4	5	4 1/2	4	4	5	4 1/2
Reinforcing Steel	"a"	Length	3-2	3-2	4-2	4-2	4-3	5-3	5-3	5-3	5-3	5-3	5-2	6-3	6-3	6-3	6-3	6-3	6-3	6-2	6-2	6-3	6-3	6-2	6-2
Reinforcing Steel	"d" Dist. Bars	Top Slab-No. of	2	2	3	3	2	3	5	3	3	3	3	7	3	7	3	7	3		3	7	3		3
Reinforcing Steel	"d" Dist. Bars	Bottom Slab-No. of	2	2	2	2	2	3	3		3		3	3		3		3			3	3	3		3
Reinforcing Steel	"e" Bars	Spacing	18	18	18	18	12 1/4	18	18	18	17	13	9 1/2	18	18	18	18	18	17	13	11	18	12	8 1/2	6 1/2
Reinforcing Steel	Spacers	Number	12	12	12	12		12	12		14			14		14		14				16			
QUAN.	Concrete: C.Y. per lin. ft.		17	18	23	27	31	29	33	36	36	40	43	32	37	36	41	40	44	51	54	43	48	55	57
QUAN.	Reinf. lbs per lin. ft.		27	29	34	36	46	44	45	47	48	52	64	57	56	59	57	61	60	68	75	63	65	77	87

Note

For boxes of height less than that shown in table, use next greater table height slabs, wall dimensions and reinforcing steel, and make necessary changes in bar lengths, number of spacers and quantities.

This drawing is NOT in conformance with latest UBC and should be used with care and judgment.

RECOMMENDED BY THE SAN DIEGO REGIONAL STANDARDS COMMITTEE

Chairperson R.C.E. 19246 Date 3/01/2003

DRAWING NUMBER D-76A

METRIC TABLE - SPAN 1.88m (all measuements in millimeters unless otherwise noted).

SPAN			1.88m																			
HEIGHT			2'		3'		4'			5'				6'					7'				
STRENGTH CLASSIFICATION			A	B	A	B	A	B	C	A	B	C	D	A	B	C	D	E	A	B	C	D	E
MAX FILL OVER TOP			254	457	254	457	254	457	635	229	457	635	914	229	432	635	914	1.14m	229	432	635	914	1.14m
CONC.	Top Slab	T_1	210	210	210	210	210	210	235	210	210	235	279	210	210	235	279	305	210	210	235	279	305
CONC.	Bottom Slab	T_2	172	203	172	203	172	203	248	184	210	305	286	184	210	267	286	311	184	210	267	286	311
CONC.	Sidewalls	T_3	152	152	152	152	152	152	152	152	152	152	152	152	152	152	159	178	152	152	159	178	197
Reinforcing Steel	"a"	Size Bar "	16	16	16	16	16	16	19	16	16	19	19	16	16	19	22	22	16	16	19	22	22
Reinforcing Steel	"a"	Spacing	102	102	102	102	102	102	127	102	102	127	4 1/2	102	102	127	5 1/2	5	102	102	127	140	127
Reinforcing Steel	"a"	Length	2.21m	2.21m	2.21m	2.21m	2.21m	2.21m	2.18m	2.21m	2.21m	2.18m	2.18m	2.21m	2.21m	2.18m	2.21m	2.26m	2.21m	2.21m	2.18m	2.26m	2.29m
Reinforcing Steel	"d" Dist.	Top Slab-No. of	7	4	7	4	7	4		7	4		4	7	4		4	4	7	4		4	4
Reinforcing Steel	Bars	Bottom Slab-No. of	4		4		4			4			4	4			4	4	4			4	4
Reinforcing Steel	"e" Bars	Spacing	457	457	457	457	457	457	432	457	394	292	216	432	267	191	152	127	305	191	178	127	114
Reinforcing Steel	Spacers	Number	12		12		14			16				16					18				
QUAN.	Concrete: Cubic Meter per lin. ft.		30.6	32.2	32.9	35.2	36.0	38.3	44.4	44.4	41.3	45.9	50.5	42.9	44.4	49.7	54.3	59.7	45.1	46.7	53.6	59.7	67.3
QUAN.	Reinf. kg per lin. ft.		29.0	28.6	30.0	29.5	31.3	30.4	33.6	31.8	31.8	36.3	41.3	33.2	35.4	41.8	50.8	57.6	36.8	40.9	44.9	57.2	63.1

IMPERIAL TABLE - SPANS 6' (all measuements in feet and/or inches).

SPAN			6'																				
HEIGHT			2'		3'		4'			5'				6'					7'				
STRENGTH CLASSIFICATION			A	B	A	B	A	B	C	A	B	C	D	A	B	C	D	E	A	B	C	D	E
MAX FILL OVER TOP			10	18	10	18	10	18	25	9	18	25	36	9	17	25	36	45	9	17	25	36	45
CONC.	Top Slab	T_1	8 1/4	8 1/4	8 1/4	8 1/4	8 1/4	8 1/4	9 1/4	8 1/4	8 1/4	9 1/4	11	8 1/4	8 1/4	9 1/4	11	12	8 1/4	8 1/4	9 1/4	11	12
CONC.	Bottom Slab	T_2	6 3/4	8	6 3/4	8	6 3/4	8	9 3/4	7 1/4	8 1/4	10	11 1/4	7 1/4	8 1/4	10 1/2	11 1/4	12 1/4	7 1/4	8 1/4	10 1/2	11 1/4	12 1/4
CONC.	Sidewalls	T_3	6	6	6	6	6	6	6	6	6	6	6	6	6	6	6 1/4	7	6	6	6 1/4	7	7 3/4
Reinforcing Steel	"a"	Size Bar "	5	5	5	5	5	5	6	5	5	6	6	5	5	6	7	7	5	5	6	7	7
Reinforcing Steel	"a"	Spacing	4	4	4	4	4	4	5	4	4	5	4 1/2	4	4	5	5 1/2	5	4	4	5	5 1/2	5
Reinforcing Steel	"a"	Length	7-3	7-3	7-3	7-3	7-3	7-3	7-2	7-3	7-3	7-2	7-2	7-3	7-3	7-2	7-3	7-5	7-3	7-3	7-2	7-5	7-6
Reinforcing Steel	"d" Dist.	Top Slab-No. of	7	4	7	4	7	4		7	4		4	7	4		4	4	7	4		4	4
Reinforcing Steel	Bars	Bottom Slab-No. of	4		4		4			4			4	4			4	4	4			4	4
Reinforcing Steel	"e" Bars	Spacing	18	18	18	18	18	18	17	18	15 1/2	11 1/2	8 1/2	17	10 1/2	7 1/2	6	5	12	7 1/2	7	5	4 1/2
Reinforcing Steel	Spacers	Number	12		12		14			16				16					18				
QUAN.	Concrete: C.Y. per lin. ft.		40	42	43	46	47	50	58	52	54	60	66	56	58	65	71	78	59	61	70	78	88
QUAN.	Reinf. lbs per lin. ft.		64	63	66	65	69	67	74	70	70	80	91	73	78	92	112	127	81	90	99	126	139

Note

For boxes of height less than that shown in table, use next greater table height slabs, wall dimensions and reinforcing steel, and make necessary changes in bar lengths, number of spacers and quantities.

This drawing is NOT in conformance with latest UBC and should be used with care and judgment.

Revision	By	Approved	Date
ORIGINAL		A.Kercheval	12/75
Add Metric		T. Stanton	03/03

SAN DIEGO REGIONAL STANDARD DRAWING

SINGLE BOX CULVERT
DETAILS No.1

RECOMMENDED BY THE SAN DIEGO REGIONAL STANDARDS COMMITTEE

Chairperson R.C.E. 19246 Date 3/01/2003

DRAWING NUMBER D-76B

METRIC TABLE – SPAN 2.13m (all measuements in millimeters unless otherwise noted).

For Imperial table (7' Span) – see drawing D76D

SPAN			2.13m												
HEIGHT			914		1.22m		1.52m			1.83m			2.14		
STRENGTH CLASSIFICATION			A	B	A	B	A	B	C	A	B	C	A	B	C
MAX FILL OVER TOP			406	660	406	660	406	660	889	406	660	889	406	660	889
CONC.	Top Slab	T_1	184	210	184	210	184	210	248	184	210	248	184	210	248
CONC.	Bottom Slab	T_2	191	222	191	222	191	222	267	191	222	267	191	222	267
CONC.	Sidewalls	T_3	152	178	152	178	152	178	216	152	178	216	152	178	216
Reinforcing Steel	"a"	Size Bar "	16	16	16	16	16	16	19	16	16	19	16	16	19
		Spacing	229	178	229	178	229	178	229	229	178	229	229	178	229
		Length	2.03m	2.06m	2.03m	2.06m	2.03m	2.06m	2.08m	2.03m	2.06m	2.08m	2.03m	2.06m	2.08m
	"b"	Size Bar "	16	16	16	16	16	16	19	16	16	19	16	16	19
		Spacing	229	178	229	178	229	178	229	229	178	229	229	178	229
		Dimension "X"	381	406	381	406	381	406	508	381	406	508	381	406	508
		Length	940	965	940	965	940	965	1.17m	940	965	1.17m	940	965	1.17m
	"c"	Size Bar "	16	16	16	16	16	16	19	16	16	19	16	16	19
		Spacing	229	178	229	178	229	178	229	229	178	229	229	178	229
		Dimension "Y"	559	584	559	584	559	584	686	559	584	686	559	584	686
		Length	1.58m	1.53m	1.58m	1.93m	2.18m	2.24m	2.39m	2.49m	2.24m	2.69m	2.80m	2.85m	3.0m
	"c_1"	Size Bar "	16	16	16	16	16	16	19	16	16	19	16	16	19
		Spacing	229	178	229	178	229	178	229	229	178	229	229	178	229
		Dimension "Y"	559	584	559	584	559	584	686	559	584	686	559	584	686
		Length	1.12m	1.17m	1.12m	1.17m	1.12m	1.17m	1.37m	1.12m	1.17m	1.37m	1.12m	1.17m	1.37m
	"d" Bars	Top Slab–No. of	7	4	7	4	7	4	4	7	4	4	7	4	4
		Bottom Slab–No. of	4	4	4	4	4	4	4	4	4	4	4	4	4
	"e" Bars	Spacing	457	457	457	457	457	457	457	457	457	457	457	457	457
	Spacers	Total Number	24		28		28			32			36		
QUAN.	Concrete: cu meters per lin. ft.		36.0	42.9	39.0	45.9	42.1	49.0	59.7	44.4	52.0	64.3	47.4	55.9	68.0
QUAN.	Reinf kg per lin. ft.		48.6	59.0	51.8	62.6	53.6	64.9	76.3	56.7	68.0	80.0	59.9	71.7	83.5

For boxes of height less than that shown in table, use next greater table height slabs, wall dimensions and reinforcing steel, and make necessary changes in bar lengths, number of spacers and quantities.

This drawing is NOT in conformance with latest UBC and should be used with care and judgment.

Revision	By	Approved	Date
ORIGINAL		A.Kercheval	12/75
Add Metric		T. Stanton	03/03

SAN DIEGO REGIONAL STANDARD DRAWING

SINGLE BOX CULVERT

DETAILS No.1

RECOMMENDED BY THE SAN DIEGO REGIONAL STANDARDS COMMITTEE

Chairperson R.C.E. 19246 Date 3/01/2003

DRAWING NUMBER D-76C

IMPERIAL TABLE – SPAN 7' (all measuements in feet and/or inches unless otherwise noted).
For Metric Table (2.13m Span) – see drawing D76C

SPAN			7'												
HEIGHT			3'		4'		5'			6'			7'		
STRENGTH CLASSIFICATION			A	B	A	B	A	B	C	A	B	C	A	B	C
MAX FILL OVER TOP			16	26	16	26	16	26	35	16	26	35	16	26	35
CONC.	Top Slab	T_1	7 1/4	8 1/4	7 1/4	8 1/4	7 1/4	8 1/4	9 3/4	7 1/4	8 1/4	9 3/4	7 1/4	8 1/4	9 3/4
CONC.	Bottom Slab	T_2	7 1/2	8 3/4	7 1/2	8 3/4	7 1/2	8 3/4	10 1/2	7 1/2	8 3/4	10 1/2	7 1/2	8 3/4	10 1/2
CONC.	Sidewalls	T_3	6	7	6	7	6	7	8 1/2	6	7	8 1/2	6	7	8 1/2
Reinforcing Steel	"a"	Size Bar "	5	5	5	5	5	5	6	5	5	6	5	5	6
		Spacing	9	7	9	7	9	7	9	9	7	9	9	7	9
		Length	6-8	6-9	6-8	6-9	6-8	6-9	6-10	6-8	6-9	6-10	6-8	6-9	6-10
	"b"	Size Bar "	5	5	5	5	5	5	6	5	5	6	5	5	6
		Spacing	9	7	9	7	9	7	9	9	7	9	9	7	9
		Dimension "X"	1-3	1-4	1-3	1-4	1-3	1-4	1-8	1-3	1-4	1-8	1-3	1-4	1-8
		Length	3-1	3-2	3-1	3-2	3-1	3-2	3-10	3-1	3-2	3-10	3-1	3-2	3-10
	"c"	Size Bar "	5	5	5	5	5	5	6	5	5	6	5	5	6
		Spacing	9	7	9	7	9	7	9	9	7	9	9	7	9
		Dimension "Y"	1-10	1-11	1-10	1-11	1-10	1-11	2-3	1-10	1-11	2-3	1-10	1-11	2-3
		Length	5-2	5-4	6-2	6-4	7-2	7-4	7-10	8-2	8-4	8-10	9-2	9-4	9-10
	"c_1"	Size Bar "	5	5	5	5	5	5	6	5	5	6	5	5	6
		Spacing	9	7	9	7	9	7	9	9	7	9	9	7	9
		Dimension "Y"	1-10	1-11	1-10	1-11	1-10	1-11	2-3	1-10	1-11	2-3	1-10	1-11	2-3
		Length	3-8	3-10	3-8	3-10	3-8	3-10	4-6	3-8	3-10	4-6	3-8	3-10	4-6
	"d" Bars	Top Slab-No. of	7	4	7	4	7	4	4	7	4	4	7	4	4
		Bottom Slab-No. of	4	4	4	4	4	4	4	4	4	4	4	4	4
	"e" Bars	Spacing	18	18	18	18	18	18	18	18	18	18	18	18	18
	Spacers	Total Number	24		28		28			32			36		
QUAN.	Concrete: C.Y. per lin. ft.		47	56	51	60	55	64	78	58	68	84	62	73	89
QUAN.	Reinf lbs per lin. ft.		107	130	114	138	118	143	168	125	150	176	132	158	184

For boxes of height less than that shown in table, use next greater table height slabs, wall dimensions and reinforcing steel, and make necessary changes in bar lengths, number of spacers and quantities.

This drawing is NOT in conformance with latest UBC and should be used with care and judgment.

Revision	By	Approved	Date
ORIGINAL		A.Kercheval	12/75
Add Metric		T. Stanton	03/03

SAN DIEGO REGIONAL STANDARD DRAWING

SINGLE BOX CULVERT
DETAILS No.1

RECOMMENDED BY THE SAN DIEGO REGIONAL STANDARDS COMMITTEE

Chairperson R.C.E. 19246 Date 3/10/2003

DRAWING NUMBER D-76D

METRIC TABLE – SPAN 2.44m (all measuements in millimeters unless otherwise noted).

For Imperial table (8' Span) – see drawing D76F

SPAN			2.44m														
HEIGHT			910mm		1.22m		1.52m		1.83m			2.13m			2.44m		
STRENGTH CLASSIFICATION			A	B	A	B	A	B	A	B	C	A	B	C	A	B	C
MAX FILL OVER TOP			4m	6.4m	4m	6.4m	4m	6.4m	4m	6.4m	9.4m	4m	6.4m	9.4m	4m	6.4m	9.4m
CONC.	Top Slab	T_1	184	216	184	216	184	216	184	216	260	184	216	260	184	216	260
CONC.	Bottom Slab	T_2	184	241	184	241	184	241	184	241	292	184	241	292	184	241	292
CONC.	Sidewalls	T_3	165	184	165	184	165	184	165	184	248	165	184	248	165	184	248
Reinforcing Steel	"a"	Size Bar "	16	16	16	16	16	16	16	16	19	16	16	19	16	16	19
		Spacing	229	178	229	178	229	178	229	178	203	229	178	203	229	178	203
		Length	2.31m	2.34m	2.31m	2.34m	2.31m	2.34m	2.31m	2.34m	2.40m	2.31m	2.34m	2.40m	2.31m	2.34m	2.40m
	"b"	Size Bar "	16	16	16	16	16	16	16	16	19	16	16	19	16	16	19
		Spacing	229	178	229	178	229	178	229	178	203	229	178	203	229	178	203
		Dimension "X"	457	483	457	483	457	483	457	483	508	457	483	508	457	483	508
		Length	1.02m	1.04m	1.02m	1.04m	1.02m	1.04m	1.02m	1.04m	1.17m	1.02m	1.04m	1.17m	1.02m	1.04m	1.17m
	"c"	Size Bar "	16	16	16	16	16	16	16	16	19	16	16	19	16	16	19
		Spacing	229	178	229	178	229	178	229	178	203	229	178	203	229	178	203
		Dimension "Y"	610	737	610	737	610	737	610	737	813	610	737	813	610	737	813
		Length	1.02m	1.17m	1.93m	2.08m	2.24m	2.39m	2.54m	2.69m	2.82m	2.84m	3.10m	3.12m	3.15m	3.30m	3.43m
	"c_1"	Size Bar "	16	16	16	16	16	16	16	16	19	16	16	19	16	16	19
		Spacing	9	7	9	7	9	7	9	7	8	9	7	8	9	7	8
		Dimension "Y"	610	737	610	737	610	737	610	737	813	610	686	813	610	737	813
		Length	1.14m	1.35m	1.14m	1.35m	1.14m	1.35m	3–9	1.35m	1.52m	1.14m	1.35m	1.52m	1.14m	1.35m	1.52m
	"d" Bars	Top Slab–No. of	7	5	7	5	7	5	7	5	5	7	5	5	7	5	5
		Bottom Slab–No. of	5	5	5	5	5	5	5	5	5	5	5	5	5	5	5
	"e" Bars	Spacing	457	457	457	457	457	457	457	457	457	457	457	457	457	457	457
	Spacers	Total Number	28		32		32		36			40			40		
QUAN.	Concrete: Cubic Meter per lin. ft.		39.8	50.0	42.9	53.6	46.9	56.6	50.0	60.4	76.5	52.8	63.5	81.1	55.9	67.3	85.7
QUAN.	Reinf kg per lin. ft.		53.6	65.8	56.7	69.9	58.6	63.1	61.7	75.8	95.8	64.9	79.0	99.8	66.7	81.2	102.1

Note

For boxes of height less than that shown in table, use next greater table height slabs, wall dimensions and reinforcing steel, and make necessary changes in bar lengths, number of spacers and quantities.

This drawing is NOT in conformance with latest UBC and should be used with care and judgment.

Revision	By	Approved	Date
ORIGINAL		A.Kercheval	12/75
Add Metric		T. Stanton	03/03

SAN DIEGO REGIONAL STANDARD DRAWING

SINGLE BOX CULVERT

DETAILS No.1

RECOMMENDED BY THE SAN DIEGO REGIONAL STANDARDS COMMITTEE

Chairperson R.C.E. 19246 Date 3/10/2003

DRAWING NUMBER D-76E

IMPERIAL TABLE - SPAN 8' (all measuements in feet and/or inches unless otherwise noted).

For Metric table (2.44m Span) - see drawing D76E

SPAN			8'														
HEIGHT			3'		4'		5'		6'			7'			8'		
STRENGTH CLASSIFICATION			A	B	A	B	A	B	A	B	C	A	B	C	A	B	C
MAX FILL OVER TOP			13	21	13	21	13	21	13	21	31	13	21	31	13	21	31
CONC.	Top Slab	T_1	7 1/4	8 1/2	7 1/4	8 1/2	7 1/4	8 1/2	7 1/4	8 1/2	10 1/4	7 1/4	8 1/2	10 1/4	7 1/4	8 1/2	10 1/4
CONC.	Bottom Slab	T_2	7 1/4	9 1/2	7 1/4	9 1/2	7 1/4	9 1/2	7 1/4	9 1/2	11 1/2	7 1/4	9 1/2	11 1/2	7 1/4	9 1/2	11 1/2
CONC.	Sidewalls	T_3	6 1/2	7 1/2	6 1/2	7 1/2	6 1/2	7 1/2	6 1/2	7 1/2	9 3/4	6 1/2	7 1/2	9 3/4	6 1/2	7 1/2	9 3/4
Reinforcing Steel	"a"	Size Bar "	5	5	5	5	5	5	5	5	6	5	5	6	5	5	6
Reinforcing Steel	"a"	Spacing	9	7	9	7	9	7	9	7	8	9	7	8	9	7	8
Reinforcing Steel	"a"	Length	7-7	7-8	7-7	7-8	7-7	7-8	7-7	7-8	7-10	7-7	7-8	7-10	7-7	7-8	7-10
Reinforcing Steel	"b"	Size Bar "	5	5	5	5	5	5	5	5	6	5	5	6	5	5	6
Reinforcing Steel	"b"	Spacing	9	7	9	7	9	7	9	7	8	9	7	8	9	7	8
Reinforcing Steel	"b"	Dimension "X"	1-6	1-7	1-6	1-7	1-6	1-7	1-6	1-7	1-8	1-6	1-7	1-8	1-6	1-7	1-8
Reinforcing Steel	"b"	Length	3-4	3-5	3-4	3-5	3-4	3-5	3-4	3-5	3-10	3-4	3-5	3-10	3-4	3-5	3-10
Reinforcing Steel	"c"	Size Bar "	5	5	5	5	5	5	5	5	6	5	5	6	5	5	6
Reinforcing Steel	"c"	Spacing	9	7	9	7	9	7	9	7	8	9	7	8	9	7	8
Reinforcing Steel	"c"	Dimension "Y"	2-0	2-5	2-0	2-5	2-0	2-5	2-0	2-5	2-8	2-0	2-5	2-8	2-0	2-5	2-8
Reinforcing Steel	"c"	Length	3-4	3-10	6-4	6-10	7-4	7-10	8-4	8-10	9-3	9-4	9-10	10-3	10-4	10-10	11-3
Reinforcing Steel	"c_1"	Size Bar "	5	5	5	5	5	5	5	5	6	5	5	6	5	5	6
Reinforcing Steel	"c_1"	Spacing	9	7	9	7	9	7	9	7	8	9	7	8	9	7	8
Reinforcing Steel	"c_1"	Dimension "Y"	2-0	2-5	2-0	2-5	2-0	2-5	2-0	2-5	2-8	2-0	2-3	2-8	2-0	2-5	2-8
Reinforcing Steel	"c_1"	Length	3-9	4-5	3-9	4-5	3-9	4-5	3-9	4-5	5-0	3-9	4-5	5-0	3-9	4-5	5-0
Reinforcing Steel	"d" Bars	Top Slab-No. of	7	5	7	5	7	5	7	5	5	7	5	5	7	5	5
Reinforcing Steel	"d" Bars	Bottom Slab-No. of	5	5	5	5	5	5	5	5	5	5	5	5	5	5	5
Reinforcing Steel	"e" Bars	Spacing	18	18	18	18	18	18	18	18	18	18	18	18	18	18	18
Reinforcing Steel	Spacers	Total Number	28		32		32		36			40			40		
QUAN.	Concrete: C.Y. per lin. ft.		52	65	56	70	60	74	65	79	100	69	83	106	73	88	112
QUAN.	Reinf lbs per lin. ft.		118	146	125	154	129	139	136	167	211	143	174	220	147	179	225

For boxes of height less than that shown in table, use next greater table height slabs, *wall dimensions and reinforcing steel, and make necessary changes in bar lengths,* number of spacers and quantities.

This drawing is NOT in conformance with latest UBC and should be used with care and judgment.

Revision	By	Approved	Date
ORIGINAL	A.Kercheval	12/75	
Add Metric	T. Stanton	03/03	

SAN DIEGO REGIONAL STANDARD DRAWING

SINGLE BOX CULVERT

DETAILS No.1

RECOMMENDED BY THE SAN DIEGO REGIONAL STANDARDS COMMITTEE

Chairperson R.C.E. 19246 Date 3/10/2003

DRAWING NUMBER D-76F

Revision	By	Approved	Date
ORIGINAL		A.Kercheval	12/75
Add Metric		T. Stanton	03/03

SAN DIEGO REGIONAL STANDARD DRAWING

SINGLE BOX CULVERT
DETAILS No.1

RECOMMENDED BY THE SAN DIEGO REGIONAL STANDARDS COMMITTEE

Chairperson R.C.E. 19246 Date 3/10/2003

DRAWING NUMBER D-76G

This drawing is NOT in conformance with latest UBC and should be used with care and judgment.

METRIC TABLE – SPAN 3.05m (all measuements in millimeters unless otherwise noted).
For Imperial table (10' Span) – see drawing D76H

SPAN			3.05m																
HEIGHT			1.22m		1.52m		1.83m		2.13m		2.44m			2.74m			3.05m		
STRENGTH CLASSIFICATION			A	B	A	B	A	B	A	B	A	B	C	A	B	C	A	B	C
MAX FILL OVER TOP			2.7m	5.5m	2.7m	5.5m	2.7m	5.5m	2.7m	5.5m	2.4m	5.5m	8.5m	2.4m	5.5m	8.5m	2.4m	5.5m	8.5m
CONC.	Top Slab	T_1	203	241	210	248	210	248	216	248	216	248	311	216	248	311	216	248	311
CONC.	Bottom Slab	T_2	222	267	229	272	229	272	235	279	235	279	337	235	279	337	235	279	337
CONC.	Sidewalls	T_3	184	241	184	241	184	241	184	241	184	241	292	8	241	292	229	241	292
Reinforcing Steel	"a"	Size Bar "	19	19	19	19	19	19	19	19	19	19	22	19	19	22	19	19	22
		Spacing	279	203	279	203	279	203	279	203	279	203	229	279	203	229	279	203	229
		Length	2.87m	2.95m	2.87m	2.95m	2.87m	2.95m	2.87m	2.95m	2.87m	2.95m	2.97m	9-6	2.95m	2.97m	2.87m	2.95m	2.97m
	"b"	Size Bar "	16	19	16	19	16	19	16	19	16	19	19	16	19	19	16	19	19
		Spacing	279	203	279	203	279	203	279	203	279	203	229	279	203	229	279	203	229
		Dimension "X"	610	610	610	610	610	610	610	610	610	610	782	610	610	782	610	610	782
		Length	1.17m	1.27m	1.17m	1.27m	1.17m	1.27m	1.17m	1.27m	1.17m	1.27m	1.42m	1.17m	1.27m	1.42m	1.17m	1.27m	1.42m
	"c"	Size Bar "	16	19	16	19	16	19	16	19	16	19	19	16	19	19	16	19	19
		Spacing	279	203	279	203	279	203	279	203	279	203	229	279	203	229	279	203	229
		Dimension "Y"	813	1.02m	813	1.02m	813	1.02m	813	1.02m	813	1.02m	1.07m	813	1.02m	1.07m	813	1.02m	1.07m
		Length	2.11m	2.39m	2.46m	2.69m	2.77m	9-10	10-1	10-10	11-1	11-10	12-3	12-1	12-10	13-3	13-1	13-10	14-3
	"c_1"	Size Bar "	16	19	16	19	16	19	16	19	16	19	19	16	19	19	16	19	19
		Spacing	279	203	279	203	279	203	279	203	279	203	229	279	203	229	279	203	229
		Dimension "Y"	813	1.02m	813	1.02m	813	1.02m	813	1.02m	813	1.02m	1.07m	813	1.02m	1.07m	813	1.02m	1.07m
		Length	1.40m	1.73m	1.40m	1.73m	1.40m	1.73m	1.40m	1.73m	1.40m	1.73m	1.88m	1.40m	1.73m	1.88m	1.40m	1.73m	1.88m
	"d" Bars	Top Slab-No. of	9	5	9	5	9	5	9	5	9	5	5	9	5	5	9	5	5
		Bottom Slab-No. of	5	5	5	5	5	5	5	5	5	5	5	5	5	5	5	5	5
	"e" Bars	Spacing	457	457	457	457	457	457	457	457	457	457	457	457	457	457	457	457	457
	Spacers	Total Number	32		34		36		40		40			44			48		
QUAN.	Concrete: Cu Meter per lin. ft.		57.4	71.9	62.7	85.6	65.8	85.6	70.4	88.0	74.2	92.6	114.7	81.1	96.4	120.1	90.3	101.0	126.2
QUAN.	Reinf kg per lin. ft.		64.9	100	67.2	103.5	69.9	106.6	72.6	110.7	74.4	113.4	120.3	77.2	117.5	123.9	80.8	121.2	127.5

For boxes of height less than that shown in table, use next greater table height slabs, wall dimensions and reinforcing steel, and make necessary changes in bar lengths, number of spacers and quantities.

IMPERIAL TABLE – SPAN 10' (*all measuements in feet and/or inches unless otherwise noted*).

For Metric table (3.05m Span) – see drawing D76G

SPAN			10'																
HEIGHT			4'		5'		6'		7'		8'			9'			10'		
STRENGTH CLASSIFICATION			A	B	A	B	A	B	A	B	A	B	C	A	B	C	A	B	C
MAX FILL OVER TOP			9	18	9	18	9	18	9	18	8	18	28	8	18	28	8	18	28
CONC.	Top Slab	T_1	8	9 1/2	8 1/4	9 3/4	8 1/4	9 3/4	8 1/2	9 3/4	8 1/2	9 3/4	12 1/4	8 1/2	9 3/4	12 1/4	8 1/2	9 3/4	12 1/4
CONC.	Bottom Slab	T_2	8 3/4	10 1/2	9	10 3/4	9	10 3/4	9 1/4	11	9 1/4	11	13 1/4	9 1/4	11	13 1/4	9 1/4	11	13 1/4
CONC.	Sidewalls	T_3	7 1/4	9 1/2	7 1/4	9 1/2	7 1/4	9 1/2	7 1/4	9 1/2	7 1/4	9 1/2	11 1/2	8	9 1/2	11 1/2	9	9 1/2	11 1/2
Reinforcing Steel	"a"	Size Bar #	6	6	6	6	6	6	6	6	6	6	7	6	6	7	6	6	7
Reinforcing Steel	"a"	Spacing	11	8	11	8	11	8	11	8	11	8	9	11	8	9	11	8	9
Reinforcing Steel	"a"	Length	9–5	9–8	9–5	9–8	9–5	9–8	9–5	9–8	9–5	9–8	9–9	9–6	9–8	9–9	9–5	9–8	9–9
Reinforcing Steel	"b"	Size Bar #	5	6	5	6	5	6	5	6	5	6	6	5	6	6	5	6	6
Reinforcing Steel	"b"	Spacing	11	8	11	8	11	8	11	8	11	8	9	11	8	9	11	8	9
Reinforcing Steel	"b"	Dimension "X"	2–0	2–0	2–0	2–0	2–0	2–0	2–0	2–0	2–0	2–0	2–6	2–0	2–0	2–6	2–0	2–0	2–6
Reinforcing Steel	"b"	Length	3–10	4–2	3–10	4–2	3–10	4–2	3–10	4–2	3–10	4–2	4–8	3–10	4–2	4–8	3–10	4–2	4–8
Reinforcing Steel	"c"	Size Bar #	5	6	5	6	5	6	5	6	5	6	6	5	6	6	5	6	6
Reinforcing Steel	"c"	Spacing	11	8	11	8	11	8	11	8	11	8	9	11	8	9	11	8	9
Reinforcing Steel	"c"	Dimension "Y"	2–8	3–4	2–8	3–4	2–8	3–4	2–8	3–4	2–8	3–4	3–6	2–8	3–4	3–6	2–8	3–4	3–6
Reinforcing Steel	"c"	Length	6–11	7–10	8–1	8–10	9–1	9–10	10–1	10–10	11–1	11–10	12–3	12–1	12–10	13–3	13–1	13–10	14–3
Reinforcing Steel	"c_1"	Size Bar #	5	6	5	6	5	6	5	6	5	6	6	5	6	6	5	6	6
Reinforcing Steel	"c_1"	Spacing	11	8	11	8	11	8	11	8	11	8	9	11	8	9	11	8	9
Reinforcing Steel	"c_1"	Dimension "Y"	2–8	3–4	2–8	3–4	2–8	3–4	2–8	3–4	2–8	3–4	3–6	2–8	3–4	3–6	2–8	3–4	3–6
Reinforcing Steel	"c_1"	Length	4–7	5–8	4–7	5–8	4–7	5–8	4–7	5–8	4–7	5–8	6–0	4–7	5–8	6–0	4–7	5–8	6–2
Reinforcing Steel	"d" Bars	Top Slab–No. of	9	5	9	5	9	5	9	5	9	5	5	9	5	5	9	5	5
Reinforcing Steel	"d" Bars	Bottom Slab–No. of	5	5	5	5	5	5	5	5	5	5	5	5	5	5	5	5	5
Reinforcing Steel	"e" Bars	Spacing	18	18	18	18	18	18	18	18	18	18	18	18	18	18	18	18	18
Reinforcing Steel	Spacers	Total Number	32		34		36		40		40			44			48		
QUAN.	Concrete: C.Y. per lin. ft.		75	94	82	108	86	108	92	115	97	121	150	106	126	157	118	132	165
QUAN.	Reinf lbs per lin. ft.		143	221	148	228	154	235	160	244	164	250	265	170	259	273	178	267	281

For boxes of height less than that shown in table, use next greater table height slabs, wall dimensions and reinforcing steel, and make necessary changes in bar lengths, number of spacers and quantities.

This drawing is NOT in conformance with latest UBC and should be used with care and judgment.

Revision	By	Approved	Date
ORIGINAL		A.Kercheval	12/75
Add Metric		T. Stanton	03/03

SAN DIEGO REGIONAL STANDARD DRAWING

SINGLE BOX CULVERT

DETAILS No.1

RECOMMENDED BY THE SAN DIEGO REGIONAL STANDARDS COMMITTEE

Chairperson R.C.E. 19248 Date 3/04/2003

DRAWING NUMBER D-76H

METRIC TABLE – SPAN 3.66m (all measuements in millimeters unless otherwise noted).

For Imperial table (12' Span) – see drawing D76J

SPAN			3.66m														
HEIGHT			1.83m		2.13m		2.44m		2.74m			3.05m			3.66m		
STRENGTH CLASSIFICATION			A	B	A	B	A	B	A	B	C	A	B	C	A	B	C
MAX FILL OVER TOP			1.5m	4.9m	1.5m	4.9m	1.5m	4.9m	1.5m	4.9m	7.3m	1.5m	4.9m	7.3m	1.5m	4.9m	7.3m
CONC.	Top Slab	T_1	222	286	222	286	222	286	229	286	337	229	286	337	229	286	337
CONC.	Bottom Slab	T_2	222	311	222	311	222	311	229	311	375	229	311	375	229	311	375
CONC.	Sidewalls	T_3	191	267	191	267	191	267	203	267	318	229	267	318	229	267	318
Reinforcing Steel	"a"	Size Bar #	19	22	19	22	19	22	19	22	22	19	22	22	19	22	22
		Spacing	279	254	279	254	279	254	279	254	203	279	254	203	279	254	203
		Length	3.38m	4.27m	3.38m	4.27m	3.38m	4.27m	3.45m	4.27m	3.56m	3.48m	4.27m	3.56m	3.48m	4.27m	3.56m
	"b"	Size Bar #	19	22	19	22	19	22	19	22	22	19	22	22	19	22	22
		Spacing	279	254	279	254	279	254	279	254	203	279	254	203	279	254	203
		Dimension "X"	813	914	813	914	813	914	813	914	914	813	914	914	813	914	914
		Length	1.47m	1.70m	1.47m	1.70m	1.47m	1.70m	1.47m	1.70m	1.70m	1.47m	1.70m	1.70m	1.47m	1.70m	1.70m
	"c"	Size Bar #	19	22	19	22	19	22	19	22	22	19	22	22	19	22	22
		Spacing	279	254	279	254	279	254	279	254	203	279	254	203	279	254	203
		Dimension "Y"	1.14m	1.14m	1.14m	1.14m	1.14m	1.14m	1.14m	1.14m	1.14m	1.14m	1.14m	1.14m	1.14m	1.14m	1.14m
		Length	3.10m	3.15m	3.40m	3.45m	3.71m	3.76m	4.01m	4.06m	4.11m	4.32m	4.37m	4.42m	4.93m	4.98m	5.03m
	"c_1"	Size Bar #	19	22	19	22	19	22	19	22	22	19	22	22	19	22	22
		Spacing	11	10	11	10	11	10	11	10	8	11	10	8	11	10	8
		Dimension "Y"	1.14m	1.14m	1.14m	1.14m	1.14m	1.14m	1.14m	1.14m	1.14m	1.14m	1.14m	1.14m	1.14m	1.14m	1.14m
		Length	1.80m	1.96m	1.80m	1.96m	1.80m	1.98m	1.80m	1.98m	2.03m	1.80m	1.98m	2.03m	1.80m	1.98m	2.03m
	"d" Bars	Top Slab–No. of	10	6	10	6	10	6	10	6	6	10	6	6	10	6	6
		Bottom Slab–No. of	6	6	6	6	6	6	6	6	6	6	6	6	6	6	6
	"e" Bars	Spacing	457	457	457	457	457	457	457	457	457	457	457	457	457	457	457
	Spacers	Total Number	36		44		44		44			48			52		
QUAN.	Concrete: cu m per lin. ft.		76.7	105.5	78.8	110.1	82.6	116.3	90.3	120.6	145.3	99.4	126.2	151.4	107.9	136.1	162.9
QUAN.	Reinf kg per lin. ft.		92.1	133.0	96.7	137.9	98.9	141.1	101.2	143.8	175.6	104.8	147.9	180.1	110.3	154.7	188.3

For boxes of height less than that shown in table, use next greater table height slabs, wall dimensions and reinforcing steel, and make necessary changes in bar lengths, number of spacers and quantities.

This drawing is NOT in conformance with latest UBC and should be used with care and judgment.

Revision	By	Approved	Date
ORIGINAL		A.Kercheval	12/75
Add Metric		T. Stanton	03/03

SAN DIEGO REGIONAL STANDARD DRAWING

SINGLE BOX CULVERT

DETAILS No.1

RECOMMENDED BY THE SAN DIEGO REGIONAL STANDARDS COMMITTEE

Chairperson R.C.E. 19246 Date 3/31/2003

DRAWING NUMBER D-761

IMPERIAL TABLE – SPAN 12' (all measuements in feet and/or inches unless otherwise noted).
For Metric table (3.66m Span) – see drawing D76I

SPAN			12'														
HEIGHT			6'		7'		8'		9'			10'			12'		
STRENGTH CLASSIFICATION			A	B	A	B	A	B	A	B	C	A	B	C	A	B	C
MAX FILL OVER TOP			5	16	5	16	5	16	5	16	24	5	16	24	5	16	24
CONC.	Top Slab	T_1	8 3/4	11 1/4	8 3/4	11 1/4	8 3/4	11 1/4	9	11 1/4	13 1/4	9	11 1/4	13 1/4	9	11 1/4	13 1/4
CONC.	Bottom Slab	T_2	8 3/4	12 1/4	8 3/4	12 1/4	8 3/4	12 1/4	9	12 1/4	14 3/4	9	12 1/4	14 3/4	9	12 1/4	14 3/4
CONC.	Sidewalls	T_3	7 1/2	10 1/2	7 1/2	10 1/2	7 1/2	10 1/2	8	10 1/2	12 1/2	9	10 1/2	12 1/2	9	10 1/2	12 1/2
Reinforcing Steel	"a"	Size Bar #	6	7	6	7	6	7	6	7	7	6	7	7	6	7	7
		Spacing	11	10	11	10	11	10	11	10	8	11	10	8	11	10	8
		Length	11-3	11-6	11-3	11-6	11-3	11-6	11-4	11-6	11-8	11-5	11-6	11-8	11-5	11-6	11-8
	"b"	Size Bar #	6	7	6	7	6	7	6	7	7	6	7	7	6	7	7
		Spacing	11	10	11	10	11	10	11	10	8	11	10	8	11	10	8
		Dimension "X"	2-8	3-0	2-8	3-0	2-8	3-0	2-8	3-0	3-0	2-8	3-0	3-0	2-8	3-0	3-0
		Length	4-10	5-7	4-10	5-7	4-10	5-7	4-10	5-7	5-7	4-10	5-7	5-7	4-10	5-7	5-7
	"c"	Size Bar #	6	7	6	7	6	7	6	7	7	6	7	7	6	7	7
		Spacing	11	10	11	10	11	10	11	10	8	11	10	8	11	10	8
		Dimension "Y"	3-9	3-9	3-9	3-9	3-9	3-9	3-9	3-9	3-9	3-9	3-9	3-9	3-9	3-9	3-9
		Length	10-2	10-4	11-2	11-4	12-2	12-4	13-2	13-4	13-6	14-2	14-4	14-6	16-2	16-4	16-6
	"c_1"	Size Bar #	6	7	6	7	6	7	6	7	7	6	7	7	6	7	7
		Spacing	11	10	11	10	11	10	11	10	8	11	10	8	11	10	8
		Dimension "Y"	3-9	3-9	3-9	3-9	3-9	3-9	3-9	3-9	3-9	3-9	3-9	3-9	3-9	3-9	3-9
		Length	5-11	6-5	5-11	6-5	5-11	6-6	5-11	6-6	6-8	5-11	6-6	6-8	5-11	6-6	6-8
	"d" Bars	Top Slab-No. of	10	6	10	6	10	6	10	6	6	10	6	6	10	6	6
		Bottom Slab-No. of	6	6	6	6	6	6	6	6	6	6	6	6	6	6	6
	"e" Bars	Spacing	18	18	18	18	18	18	18	18	18	18	18	18	18	18	18
	Spacers	Total Number	36		44		44		44			48			52		
QUAN.	Concrete: C.Y. per lin. ft.		99	138	103	144	108	152	118	158	190	130	185	198	141	178	213
QUAN.	Reinf lbs per lin. ft.		203	293	213	304	218	311	223	317	387	231	326	397	243	341	415

For boxes of height less than that shown in table, use next greater table height slabs, wall dimensions and reinforcing steel, and make necessary changes in bar lengths, number of spacers and quantities.

This drawing is NOT in conformance with latest UBC and should be used with care and judgment.

Revision	By	Approved	Date
ORIGINAL		A.Kerchevai	12/75
Add Metric		T. Stanton	03/03

SAN DIEGO REGIONAL STANDARD DRAWING

SINGLE BOX CULVERT
DETAILS No.1

RECOMMENDED BY THE SAN DIEGO REGIONAL STANDARDS COMMITTEE

Chairperson R.C.E. 19246 Date 3/10/2003

DRAWING NUMBER D-76J

This drawing is NOT in conformance with latest UBC and should be used with care and judgment.

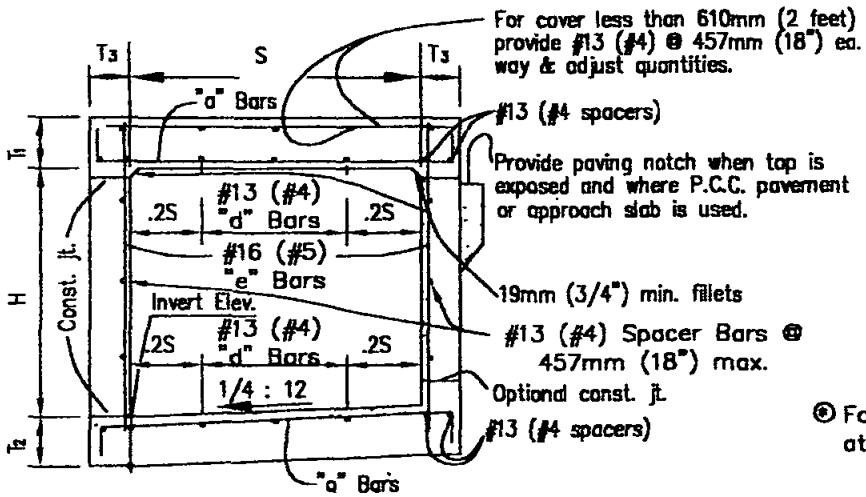

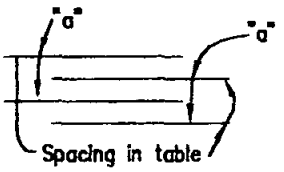

DETAIL "A"

⊕ For reinforcement clearance, except at bottom, see "Miscellaneous Details."

TYPICAL SECTIONS 610mm (2') THRU 1.83m (6') SPANS

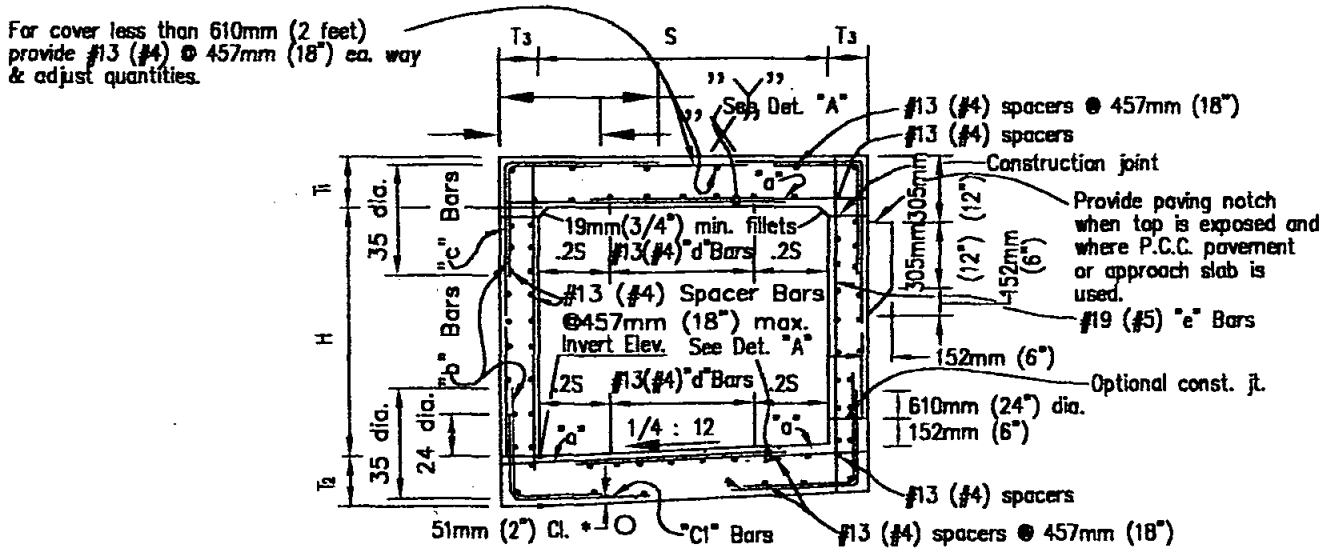

TYPICAL SECTIONS 2.13m (7') THRU 3.66m (12') SPANS

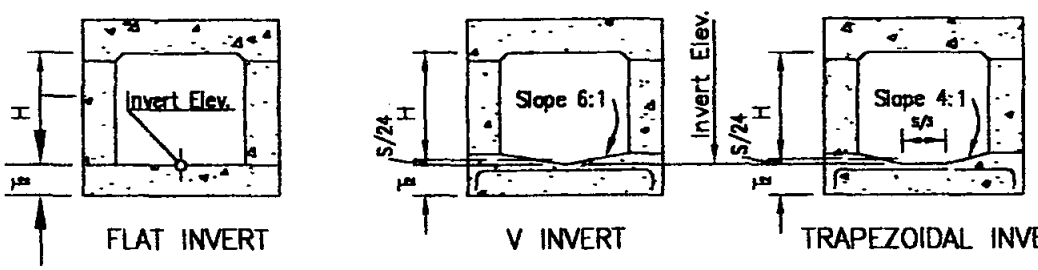

FLAT INVERT

V INVERT

TRAPEZOIDAL INVERT

ALTERNATIVE INVERTS

(When shown)

Revision	By	Approved	Date
ORIGINAL		Kercheval	12/75
Add Metric		T. Stanton	03/03

SAN DIEGO REGIONAL STANDARD DRAWING

SINGLE BOX CULVERT
DETAILS NO.2

RECOMMENDED BY THE SAN DIEGO REGIONAL STANDARDS COMMITTEE

T. Stanton 3/10/2003

Chairperson R.C.E. 19246 Date

DRAWING NUMBER D-76K

METRIC TABLE - SPAN 1.22m (all measuements in millimeters unless otherwise noted).
For Imperial table (4' Span) - see drawing D77B

SPAN			1.22m										
HEIGHT			610mm			914mm				1.22m			
STRENGTH CLASSIFICATION			A	B	C	A	B	C	D	A	B	C	D
MAX FILL OVER TOP			3.35m	6.4m	9.75m	3.35m	7.0m	10.4m	14.0m	3.35m	7.0m	10.4m	14.0m
Conc.	Top Slab	T_1	165	165	184	165	165	191	216	165	165	191	216
Conc.	Bottom Slab	T_2	152	184	216	152	191	216	241	152	191	216	241
Conc.	Sidewalls	T_3	152	152	152	152	152	152	152	152	152	152	152
Reinforcing Steel	"a"	Size Bar #	16	13	13	16	13	13	13	16	13	13	13
		Spacing	279	279	229	279	267	216	191	279	267	216	191
		Length	3.12m	3.10m	3.10m	3.12m	3.10m	3.10m	3.10m	3.12m	3.10m	3.10m	3.10m
	"b" or "b_1"	Size Bar #	16	16	16	16	16	16	16	16	16	16	16
		Spacing	279	279	229	279	267	216	191	279	267	216	191
		Length "b"	2.84m	2.84m	2.90m	2.84m	2.84m	2.90m	2.92	2.84m	2.84m	2.90m	2.92
		Length "b_1"	2.84m	9-5	2.90m	2.84m	2.84m	2.90m	2.92	2.84m	2.84m	2.90m	2.92
	"c"	Size Bar #	13	16	16	13	16	16	16	13	16	16	16
		Spacing	279	279	229	279	267	216	191	279	267	216	191
		Length	1.37m	1.37m	1.37m	1.37m	1.37m	1.37m	1.37m	1.37m	1.37m	1.37m	1.37m
	"d" Dist Bars	Top Slab-Tot. No.	10	6	6	10	6	6	6	10	6	6	6
		Bottom Slab-Tot. No.	6	6	6	6	6	6	6	6	6	6	6
	"e" Bars	Size Bar #	13	13	13	13	13	13	13	13	13	13	16
		Spacing	457	457	457	457	457	406	305	457	305	229	254
	Spacers	Number	23			26				29			
Quan.	Concrete: C.Y. per lin. ft.		0.36	0.39	0.44	0.41	0.44	0.48	0.53	0.45	0.48	0.53	0.57
Quan.	Reinf :lbs per lin. ft.		37	34	38	38	36	41	46	40	39	45	50

Note

For boxes of height less than that shown in table, use next greater table height slabs, wall dimensions and reinforcing steel, and make necessary changes in bar lengths, number of spacers and quantities. Number of "d" bars in table is slab total for both cells.

This drawing is NOT in conformance with latest UBC and should be used with care and judgment.

Revision	By	Approved	Date
ORIGINAL		Kercheval	12/75
Add Metric	T. Stanton		03/03

SAN DIEGO REGIONAL STANDARD DRAWING

DOUBLE BOX CULVERT
DETAILS No. 1

RECOMMENDED BY THE SAN DIEGO REGIONAL STANDARDS COMMITTEE

Chairperson R.C.E. 19246 Date 3/01/2003

DRAWING NUMBER D-77A

IMPERIAL TABLE – SPAN 4' (all measuements in feet and/or inches unless otherwise noted).

For Metric Table (1.22m Span) – see drawing D77A

SPAN			4'										
HEIGHT			2'			3'				4'			
STRENGTH CLASSIFICATION			A	B	C	A	B	C	D	A	B	C	D
MAX FILL OVER TOP			11	21	32	11	23	34	46	11	23	34	46
Conc.	Top Slab	T_1	6 1/2	6 1/2	7 1/4	6 1/2	6 1/2	7 1/2	8 1/2	6 1/2	6 1/2	7 1/2	8 1/2
Conc.	Bottom Slab	T_2	6	7 1/4	8 1/2	6	7 1/2	8 1/2	9 1/2	6	7 1/2	8 1/2	9 1/2
Conc.	Sidewalls	T_3	6	6	6	6	6	6	6	6	6	6	6
Reinforcing Steel	"a"	Size Bar #	5	4	4	5	4	4	4	5	4	4	4
		Spacing	11	11	9	11	10 1/2	8 1/2	7 1/2	11	10 1/2	8 1/2	7 1/2
		Length	10-3	10-2	10-2	10-3	10-2	10-2	10-2	10-3	10-2	10-2	10-2
	"b" or "b_1"	Size Bar #	5	5	5	5	5	5	5	5	.5	5	5
		Spacing	11	11	9	11	10 1/2	8 1/2	7 1/2	11	10 1/2	8 1/2	7 1/2
		Length "b"	9-4	9-4	9-6	9-4	9-4	9-6	9-7	9-4	9-4	9-6	9-7
		Length "b_1"	9-4	9-5	9-6	9-4	9-4	9-6	9-7	9-4	9-4	9-6	9-7
	"c"	Size Bar #	4	5	5	4	5	5	5	4	5	5	5
		Spacing	11	11	9	11	10 1/2	8 1/2	7 1/2	11	10 1/2	8 1/2	7 1/2
		Length	4-6	4-6	4-6	4-6	4-6	4-6	4-6	4-6	4-6	4-6	4-6
	"d" Dist Bars	Top Slab-Tot. No.	10	6	6	10	6	6	6	10	6	6	6
		Bottom Slab-Tot. No.	6	6	6	6	6	6	6	6	6	6	6
	"e" Bars	Size Bar #	4	4	4	4	4	4	4	4	4	4	5
		Spacing	18	18	18	18	18	16	12	18	12	9	10
	Spacers	Number	23			26				29			
Quan.	Concrete: C.Y. per lin. ft.		0.47	0.51	0.57	0.53	0.57	0.63	0.69	0.59	0.63	0.69	0.75
	Reinf :lbs per lin. ft.		81	74	84	84	79	91	101	87	85	99	111

Note

For boxes of height less than that shown in table, use next greater table height slabs, wall dimensions and reinforcing steel, and make necessary changes in bar lengths, number of spacers and quantities. Number of "d" bars in table is slab total for both cells.

This drawing is NOT in conformance with latest UBC and should be used with care and judgment.

Revision	By	Approved	Date
ORIGINAL		Kercheval	12/75
Add Metric		T. Stanton	03/03

SAN DIEGO REGIONAL STANDARD DRAWING

DOUBLE BOX CULVERT

DETAILS No. 1

RECOMMENDED BY THE SAN DIEGO REGIONAL STANDARDS COMMITTEE

Chairperson R.C.E. 19246 Date 3/10/2003

DRAWING NUMBER D-77B

METRIC TABLE – SPAN 1.52m (all measuements in millimeters unless otherwise noted).
For Imperial table (5' Span) – see drawing D77D

SPAN			1.52m													
HEIGHT			610mm			914mm			1.22m				1.62m			
STRENGTH CLASSIFICATION			A	B	C	A	B	C	A	B	C	D	A	B	C	D
MAX FILL OVER TOP			1.83m	1.0m	1.0m	1.83m	7.3m	1.0m	1.83m	7.0m	10.4m	14m	1.83m	7.0m	10.4m	14m
Conc.	Top Slab	T_1	171	197	235	171	197	235	171	197	235	260	171	197	235	260
Conc.	Bottom Slab	T_2	165	222	260	165	222	260	165	222	260	286	165	222	260	286
Conc.	Sidewalls	T_3	152	152	152	152	152	152	152	152	152	152	152	152	152	152
Reinforcing Steel	"a"	Size Bar #	16	13	13	16	13	13	16	13	13	13	16	13	13	13
		Spacing	254	216	254	254	216	254	254	216	254	229	254	216	267	229
		Length	3.73m	3.71m	3.71m	3.73m	3.71m	3.71m	3.73m	3.71m	3.71m	3.71m	3.73m	3.71m	3.71m	3.71m
	"b" or "b_1"	Size Bar #	16	16	19	16	16	19	16	16	19	19	16	16	19	19
		Spacing	254	216	254	254	216	254	254	216	254	229	254	216	267	229
		Length "b"	3.48m	3.51m	3.53m	3.48m	3.51m	3.53m	3.48m	3.51m	3.53m	3.54m	3.48m	3.51m	3.53m	3.54m
		Length "b_1"	3.45m	3.51m	3.53m	3.45m	3.51m	3.53m	3.45m	3.51m	3.53m	3.54m	3.45m	3.51m	3.53m	3.54m
	"c"	Size Bar #	13	16	19	13	16	19	13	16	19	19	13	16	19	19
		Spacing	254	216	254	254	216	254	254	216	254	229	254	216	267	229
		Length	1.68m	1.68m	1.68m	1.68m	1.68m	1.68m	1.68m	1.68m	1.68m	1.68m	1.68m	1.68m	1.68m	1.68m
	"d" Dist Bars	Top Slab-Tot. No.	12	6	6	12	6	6	12	6	6	6	12	6	6	6
		Bottom Slab-Tot. No.	6	6	6	6	6	6	6	6	6	6	6	6	6	6
	"e" Bars	Size Bar #	13	13	13	13	13	13	13	13	13	16	13	13	16	19
		Spacing	457	457	457	457	457	406	457	305	254	267	457	216	229	229
	Spacers	Number	23			26			29				32			
Quan.	Concrete: C.Y. per lin. ft.		0.44	0.53	0.61	0.48	0.57	0.66	0.53	0.61	0.68	0.75	0.57	0.66	0.74	0.80
	Reinf :lbs per lin. ft.		45	45	49	47	47	51	48	49	54	60	49	53	57	67

Note

For boxes of height less than that shown in table, use next greater table height slabs, wall dimensions and reinforcing steel, and make necessary changes in bar lengths, number of spacers and quantities. Number of "d" bars in table is slab total for both cells.

This drawing is NOT in conformance with latest UBC and should be used with care and judgment.

Revision	By	Approved	Date
ORIGINAL		Kercheval	12/75
Add Metric	T. Stanton		03/03

SAN DIEGO REGIONAL STANDARD DRAWING

DOUBLE BOX CULVERT
DETAILS No. 1

RECOMMENDED BY THE SAN DIEGO REGIONAL STANDARDS COMMITTEE

Chairperson R.C.E. 19246 Date 3/10/2003

DRAWING NUMBER D-77C

IMPERIAL TABLE – SPAN 5' (all measuements in feet and/or inches unless otherwise noted).

For Metric Table (1.52m Span) – see drawing D77C

SPAN			5'													
HEIGHT			2'			3'			4'				5'			
STRENGTH CLASSIFICATION			A	B	C	A	B	C	A	B	C	D	A	B	C	D
MAX FILL OVER TOP			6	36	36	6	24	36	6	23	34	46	6	23	34	46
Conc.	Top Slab	T_1	6 3/4	7 3/4	9 1/4	6 3/4	7 3/4	9 1/4	6 3/4	7 3/4	9 1/4	10 1/4	6 3/4	7 3/4	9 1/4	10 1/4
Conc.	Bottom Slab	T_2	6 1/2	8 3/4	10 1/4	6 1/2	8 3/4	10 1/4	6 1/2	8 3/4	10 1/4	11 1/4	6 1/2	8 3/4	10 1/4	11 1/4
Conc.	Sidewalls	T_3	6	6	6	6	6	6	6	6	6	6	6	6	6	6
Reinforcing Steel	"a"	Size Bar #	5	4	4	5	4	4	5	4	4	4	5	4	4	4
Reinforcing Steel	"a"	Spacing	10	8 1/2	10	10	8 1/2	10	10	8 1/2	10	9	10	8 1/2	10 1/2	9
Reinforcing Steel	"a"	Length	12–3	12–2	12–2	12–3	12–2	12–2	12–3	12–2	12–2	12–2	12–3	12–2	12–2	12–2
Reinforcing Steel	"b" or "b_1"	Size Bar #	5	5	6	5	5	6	5	5	6	6	5	5	6	6
Reinforcing Steel	"b" or "b_1"	Spacing	10	8 1/2	10	10	8 1/2	10	10	8 1/2	10	9	10	8 1/2	10 1/2	9
Reinforcing Steel	"b" or "b_1"	Length "b"	11–5	11–6	11–7	11–5	11–6	11–7	11–5	11–6	11–7	11–8	11–5	11–6	11–7	11–8
Reinforcing Steel	"b" or "b_1"	Length "b_1"	11–4	11–6	11–7	11–4	11–6	11–7	11–4	11–6	11–7	11–8	11–4	11–6	11–7	11–8
Reinforcing Steel	"c"	Size Bar #	4	5	6	4	5	6	4	5	6	6	4	5	6	6
Reinforcing Steel	"c"	Spacing	10	8 1/2	10	10	8 1/2	10	10	8 1/2	10	9	10	8 1/2	10 1/2	9
Reinforcing Steel	"c"	Length	5–6	5–6	5–6	5–6	5–6	5–6	5–6	5–6	5–6	5–6	5–6	5–6	5–6	5–6
Reinforcing Steel	"d" Dist Bars	Top Slab–Tot. No.	12	6	6	12	6	6	12	6	6	6	12	6	6	6
Reinforcing Steel	"d" Dist Bars	Bottom Slab–Tot. No.	6	6	6	6	6	6	6	6	6	6	6	6	6	6
Reinforcing Steel	"e" Bars	Size Bar #	4	4	4	4	4	4	4	4	4	5	4	4	5	6
Reinforcing Steel	"e" Bars	Spacing	18	18	18	18	18	16	18	12	10	10 1/2	18	8 1/2	9	9
	Spacers	Number	23			26			29				32			
Quan.	Concrete: C.Y. per lin. ft.		0.58	0.69	0.80	0.63	0.75	0.86	0.69	0.80	0.89	0.98	0.74	0.86	0.97	1.04
Quan.	Reinf :lbs per lin. ft.		99	100	109	103	104	112	106	109	119	133	109	116	126	148

Note

For boxes of height less than that shown in table, use next greater table height slabs, wall dimensions and reinforcing steel, and make necessary changes in bar lengths, number of spacers and quantities. Number of "d" bars in table is slab total for both cells.

This drawing is NOT in conformance with latest UBC and should be used with care and judgment.

Revision	By	Approved	Date
ORIGINAL		Kercheval	12/75
Add Metric	T. Stanton		03/03

SAN DIEGO REGIONAL STANDARD DRAWING

DOUBLE BOX CULVERT

DETAILS No. 1

RECOMMENDED BY THE SAN DIEGO REGIONAL STANDARDS COMMITTEE

3/10/2003

Chairperson R.C.E. 19246 Date

DRAWING NUMBER D-77D

METRIC TABLE – SPAN 1.83m (all measuements in millimeters unless otherwise noted).

For Imperial table (6' Span) – see drawing D77F

SPAN			1.83m													
HEIGHT			914mm			1.22m			1.52m				1.83m			
STRENGTH CLASSIFICATION			A	B	C	A	B	C	A	B	C	D	A	B	C	D
MAX FILL OVER TOP			1.22m	6.1m	10.4m	1.22m	6.1m	10.4m	1.22m	5.79m	10m	13.1m	1.22m	5.8m	10m	13.1m
Conc.	Top Slab	T_1	184	210	267	184	210	267	184	210	267	305	184	210	267	305
Conc.	Bottom Slab	T_2	184	241	292	184	241	292	184	241	292	324	184	241	292	324
Conc.	Sidewalls	T_3	152	152	152	152	152	152	152	152	152	152	152	152	152	191
Reinforcing Steel	"a"	Size Bar #	16	13	13	16	13	13	16	13	13	13	16	13	13	13
		Spacing	241	279	216	241	279	216	241	279	216	267	241	279	216	267
		Length	4.34m	4.32m	4.32m	4.34m	4.32m	4.32m	4.34m	4.32m	4.32m	4.32m	4.34m	4.32m	4.32m	4.47m
	"b" or "b_1"	Size Bar #	16	19	19	16	19	19	16	19	19	22	16	19	19	22
		Spacing	241	279	216	241	279	216	241	279	216	267	241	279	216	267
		Length "b"	4.11m	4.11m	4.17m	4.11m	4.11m	4.17m	4.11m	4.11m	4.17m	4.19m	4.11m	4.11m	4.17m	4.32m
		Length "b_1"	4.09m	4.14m	4.17m	4.09m	4.14m	4.17m	4.09m	4.11m	4.17m	4.19m	4.11m	4.11m	4.17m	4.32m
	"c"	Size Bar #	13	19	19	13	19	19	13	19	19	22	13	19	19	22
		Spacing	241	279	216	241	279	216	241	279	216	267	241	279	216	267
		Length	1.98m	1.98m	1.98m	1.98m	1.98m	1.98m	1.98m	1.98m	1.98m	1.98m	1.98m	1.98m	1.98m	2.03m
	"d" Dist Bars	Top Slab–Tot. No.	12	6	6	12	6	6	12	6	6	6	12	6	6	6
		Bottom Slab–Tot. No.	6	6	6	6	6	6	6	6	6	6	6	6	6	6
	"e" Bars	Size Bar #	13	13	13	13	13	13	13	13	16	16	13	16	19	19
		Spacing	457	457	406	457	356	216	457	254	241	178	457	279	229	152
	Spacers	Number	30			33			36				36			
Quan.	Concrete: cu m per lin. ft.		0.59	0.69	0.83	0..63	0.73	0.86	.67	.77	.91	.99	0.71	.82	.96	1.12
Quan.	Reinf: kgs per lin. ft.		55	54	67	57	56	70	58	59	74	79	59	62	80	91

Note

For boxes of height less than that shown in table, use next greater table height slabs, wall dimensions and reinforcing steel, and make necessary changes in bar lengths, number of spacers and quantities. Number of "d" bars in table is slab total for both cells.

This drawing is NOT in conformance with latest UBC and should be used with care and judgment.

Revision	By	Approved	Date
ORIGINAL		Kercheval	12/75
Add Metric		T. Stanton	03/03

SAN DIEGO REGIONAL STANDARD DRAWING

DOUBLE BOX CULVERT

DETAILS No. 1

RECOMMENDED BY THE SAN DIEGO REGIONAL STANDARDS COMMITTEE

Chairperson R.C.E. 19246 Date 3/10/2003

DRAWING NUMBER D-77E

IMPERIAL TABLE – SPAN 6' (all measuements in feet and/or inches unless otherwise noted).
For Metric Table (1.83m Span) – see drawing D77E

SPAN			6'													
HEIGHT			3'			4'			5'				6'			
STRENGTH CLASSIFICATION			A	B	C	A	B	C	A	B	C	D	A	B	C	D
MAX FILL OVER TOP			4	20	34	4	20	34	4	19	33	43	4	19	33	43
Conc.	Top Slab	T_1	7 1/4	8 1/4	10 1/2	7 1/4	8 1/4	10 1/2	7 1/4	8 1/4	10 1/2	12	7 1/4	8 1/4	10 1/2	12
Conc.	Bottom Slab	T_2	7 1/4	9 1/2	11 1/2	7 1/4	9 1/2	11 1/2	7 1/4	9 1/2	11 1/2	12 3/4	7 1/4	9 1/2	11 1/2	12 3/4
Conc.	Sidewalls	T_3	6	6	6	6	6	6	6	6	6	6	6	6	6	7 1/2
Reinforcing Steel	"a"	Size Bar #	5	4	4	5	4	4	5	4	4	4	5	4	4	4
Reinforcing Steel	"a"	Spacing	9 1/2	11	8 1/2	9 1/2	11	8 1/2	9 1/2	11	8 1/2	10 1/2	9 1/2	11	8 1/2	10 1/2
Reinforcing Steel	"a"	Length	14–3	14–2	14–2	14–3	14–2	14–2	14–3	14–2	14–2	14–2	14–3	14–2	14–2	14–8
Reinforcing Steel	"b" or "b_1"	Size Bar #	5	6	6	5	6	6	5	6	6	7	5	6	6	7
Reinforcing Steel	"b" or "b_1"	Spacing	9 1/2	11	8 1/2	9 1/2	11	8 1/2	9 1/2	11	8 1/2	10 1/2	9 1/2	11	8 1/2	10 1/2
Reinforcing Steel	"b" or "b_1"	Length "b"	13–6	13–6	13–8	13–6	13–6	13–8	13–6	13–6	13–8	13–9	13–6	13–6	13–8	14–2
Reinforcing Steel	"b" or "b_1"	Length "b_1"	13–5	13–7	13–8	13–5	13–7	13–8	13–5	13–6	13–8	13–9	13–6	13–6	13–8	14–2
Reinforcing Steel	"c"	Size Bar #	4	6	6	4	6	6	4	6	6	7	4	6	6	7
Reinforcing Steel	"c"	Spacing	9 1/2	11	8 1/2	9 1/2	11	8 1/2	9 1/2	11	8 1/2	10 1/2	9 1/2	11	8 1/2	10 1/2
Reinforcing Steel	"c"	Length	6–6	6–6	6–6	6–6	6–6	6–6	6–6	6–6	6–6	6–6	6–6	6–6	6–6	6–8
Reinforcing Steel	"d" Dist Bars	Top Slab–Tot. No.	12	6	6	12	6	6	12	6	6	6	12	6	6	6
Reinforcing Steel	"d" Dist Bars	Bottom Slab–Tot. No.	6	6	6	6	6	6	6	6	6	6	6	6	6	6
Reinforcing Steel	"e" Bars	Size Bar #	4	4	4	4	4	4	4	4	5	5	4	5	6	6
Reinforcing Steel	"e" Bars	Spacing	18	18	16	18	14	8 1/2	18	10	9 1/2	7	18	11	9	6
Reinforcing Steel	Spacers	Number	30			33			36				36			
Quan.	Concrete: C.Y. per lin. ft.		0.77	0.90	1.08	0.82	0.96	1.13	0.88	1.01	1.19	1.30	0.93	1.07	1.25	1.47
Quan.	Reinf :lbs per lin. ft.		121	119	147	125	124	155	128	131	164	175	129	137	177	201

Note

For boxes of height less than that shown in table, use next greater table height slabs, wall dimensions and reinforcing steel, and make necessary changes in bar lengths, number of spacers and quantities. Number of "d" bars in table is slab total for both cells.

This drawing is NOT in conformance with latest UBC and should be used with care and judgment.

Revision	By	Approved	Date
ORIGINAL		Kercheval	12/75
Add Metric		T. Stanton	03/03

SAN DIEGO REGIONAL STANDARD DRAWING

DOUBLE BOX CULVERT
DETAILS No. 1

RECOMMENDED BY THE SAN DIEGO REGIONAL STANDARDS COMMITTEE

Chairperson R.C.E. 19246 Date 3/01/2003

DRAWING NUMBER D-77F

METRIC TABLE – SPAN 2.44m (all measuements in millimeters unless otherwise noted).
For Imperial table (8' Span) – see drawing D77H

SPAN			2.44m																
HEIGHT			1.22m			1.52m			1.83m			2.13m				2.44m			
STRENGTH CLASSIFICATION			A	B	C	A	B	C	A	B	C	A	B	C	D	A	B	C	D
MAX FILL OVER TOP			914mm	4.27m	7.62m	914mm	4.27m	7.62m	914mm	4.27m	7.62m	914mm	4.27m	7.62m	11.3m	914mm	4.27m	7.62m	11.3m
Conc.	Top Slab	T	216	241	305	216	241	305	216	241	305	216	241	311	362	216	241	311	362
Conc.	Bottom Slab	T_2	191	267	324	191	267	324	191	267	324	191	273	13	15	191	273	13	15
Conc.	Sidewalls	T_3	152	152	152	152	152	152	152	152	152	178	178	178	203	178	178	203	216
Reinforcing Steel	"a"	Size Bar #	19	13	13	19	13	13	19	13	13	19	13	13	13	19	13	13	13
		Spacing	305	241	267	305	241	254	305	241	254	292	241	254	216	292	241	254	216
		Length	5.59m	5.54m	5.54m	5.59m	5.54m	5.54m	5.59m	5.54m	5.54m	5.66m	5.61m	5.61m	5.69m	5.66m	5.61m	5.69m	5.74m
	"b" or "b_1"	Size Bar #	19	19	22	19	19	22	19	19	22	19	19	22	22	19	19	22	22
		Spacing	305	241	267	305	241	254	305	241	254	292	241	254	216	292	241	254	216
		Length "b"	5.36m	5.38m	5.41m	5.36m	5.38m	5.41m	5.36m	5.38m	5.41m	5.44m	5.44m	5.49m	5.61m	5.44m	5.44m	5.56m	5.64m
		Length "b_1"	5.31m	5.38m	5.41m	5.31m	5.38m	5.41m	5.31m	5.38m	5.41m	5.44m	5.44m	5.49m	5.61m	5.38m	5.46m	5.49m	5.66m
	"c"	Size Bar #	13	19	22	13	19	22	13	19	22	13	19	22	22	13	19	22	22
		Spacing	305	241	267	305	241	254	305	241	254	292	241	254	216	292	241	254	216
		Length	2.59m	2.59m	2.59m	2.59m	2.59m	2.59m	2.59m	2.59m	2.59m	2.62m	2.62m	2.62m	2.64m	2.62m	2.62m	2.64m	2.67m
	"d" Dist Bars	Top Slab–Tot. No.	16	8	8	16	8	8	16	8	8	16	8	8	8	16	8	8	8
		Bottom Slab–Tot. No.	8	8	8	8	8	8	8	8	8	8	8	8	8	8	8	8	8
	"e" Bars	Size Bar #	13	13	16	13	13	16	13	16	19	13	16	19	22	13	16	22	22
		Spacing	457	457	267	457	305	254	457	292	254	356	241	191	216	292	216	191	229
	Spacers	Number	41			44			44			47			56	50		60	
Quan.	Concrete: cu m per lin. ft.		.83	.99	1.19	0.87	1.05	1.23	0.91	1.09	1.27	1.00	1.19	1.40	1.64	1.06	1.24	1.52	1.73
Quan.	Reinf: kg per lin. ft.		77	79	91	78	82	99	79	85	104	84	90	113	136	87	94	129	142

Note

For boxes of height less than that shown in table, use next greater table height slabs, wall dimensions and reinforcing steel, and make necessary changes in bar lengths, number of spacers and quantities. Number of "d" bars in table is slab total for both cells.

This drawing is NOT in conformance with latest UBC and should be used with care and judgment.

Revision	By	Approved	Date
ORIGINAL		Kercheval	12/75
Add Metric	T. Stanton		03/03

SAN DIEGO REGIONAL STANDARD DRAWING

DOUBLE BOX CULVERT
DETAILS No. 1

RECOMMENDED BY THE SAN DIEGO REGIONAL STANDARDS COMMITTEE

Chairperson R.C.E. 19246 Date 3/10/2003

DRAWING NUMBER D-77G

IMPERIAL TABLE – SPAN 8' (all measuements in feet and/or inches unless otherwise noted).

For Metric Table (2.44m Span) – see drawing D77G

SPAN			8'																
HEIGHT			4'			5'			6'			7'				8'			
STRENGTH CLASSIFICATION			A	B	C	A	B	C	A	B	C	A	B	C	D	A	B	C	D
MAX FILL OVER TOP			3	14	25	3	14	25	3	14	25	3	14	25	37	3	14	25	37
Conc.	Top Slab	T_1	8 1/2	9 1/2	12	8 1/2	9 1/2	12	8 1/2	9 1/2	12	8 1/2	9 1/2	12 1/4	14 1/4	8 1/2	9 1/2	12 1/4	14 1/4
Conc.	Bottom Slab	T_2	7 1/2	10 1/2	12 3/4	7 1/2	10 1/2	12 3/4	7 1/2	10 1/2	12 3/4	7 1/2	10 3/4	13	15	7 1/2	10 3/4	13	15
Conc.	Sidewalls	T_3	6	6	6	6	6	6	6	6	6	7	7	7	8	7	7	8	8 1/2
Reinforcing Steel	"a"	Size Bar #	6	4	4	6	4	4	6	4	4	6	4	4	4	6	4	4	4
Reinforcing Steel	"a"	Spacing	12	9 1/2	10 1/2	12	9 1/2	10	12	9 1/2	10	11 1/2	9 1/2	10	8 1/2	11 1/2	9 1/2	10	8 1/2
Reinforcing Steel	"a"	Length	18-4	18-2	18-2	18-4	18-2	18-2	18-4	18-2	18-2	18-7	18-5	18-5	18-8	18-7	18-5	18-8	18-10
Reinforcing Steel	"b" or "b_1"	Size Bar #	6	6	7	6	6	7	6	6	7	6	6	7	7	6	6	7	7
Reinforcing Steel	"b" or "b_1"	Spacing	12	9 1/2	10 1/2	12	9 1/2	10	12	9 1/2	10	11 1/2	9 1/2	10	8 1/2	11 1/2	9 1/2	10	8 1/2
Reinforcing Steel	"b" or "b_1"	Length "b"	17-7	17-8	17-9	17-7	17-8	17-9	17-7	17-8	17-9	17-10	17-10	18-0	18-5	17-10	17-10	18-3	18-6
Reinforcing Steel	"b" or "b_1"	Length "b_1"	17-5	17-8	17-9	17-5	17-8	17-9	17-5	17-8	17-9	17-10	17-10	18-0	18-5	17-8	17-11	18-0	18-7
Reinforcing Steel	"c"	Size Bar #	4	6	7	4	6	7	4	6	7	4	6	7	7	4	6	7	7
Reinforcing Steel	"c"	Spacing	12	9 1/2	10 1/2	12	9 1/2	10	12	9 1/2	10	11 1/2	9 1/2	10	8 1/2	11 1/2	9 1/2	10	8 1/2
Reinforcing Steel	"c"	Length	8-6	8-6	8-6	8-6	8-6	8-6	8-6	8-6	8-6	8-7	8-7	8-7	8-8	8-7	8-7	8-8	8-9
Reinforcing Steel	"d" Dist Bars	Top Slab-Tot. No.	16	8	8	16	8	8	16	8	8	16	8	8	8	16	8	8	8
Reinforcing Steel	"d" Dist Bars	Bottom Slab-Tot. No.	8	8	8	8	8	8	8	8	8	8	8	8	8	8	8	8	8
Reinforcing Steel	"e" Bars	Size Bar #	4	4	5	4	4	5	4	5	6	4	5	6	7	4	5	7	7
Reinforcing Steel	"e" Bars	Spacing	18	18	10 1/2	18	12	10	18	11 1/2	10	14	9 1/2	7 1/2	8 1/2	11 1/2	8 1/2	7 1/2	9
	Spacers	Number		41			44			44			47		56		50	60	
Quan.	Concrete: C.Y. per lin. ft.		1.08	1.30	1.55	1.14	1.37	1.61	1.19	1.42	1.66	1.32	1.56	1.83	2.14	1.39	1.62	1.99	2.27
Quan.	Reinf :lbs per lin. ft.		169	175	200	172	181	218	173	188	229	185	199	248	299	191	207	284	314

Note

For boxes of height less than that shown in table, use next greater table height slabs, wall dimensions and reinforcing steel, and make necessary changes in bar lengths, number of spacers and quantities. Number of "d" bars in table is slab total for both cells.

This drawing is NOT in conformance with latest UBC and should be used with care and judgment.

Revision	By	Approved	Date
ORIGINAL		Kercheval	12/75
Add Metric		T. Stanton	03/03

SAN DIEGO REGIONAL STANDARD DRAWING

DOUBLE BOX CULVERT

DETAILS No. 1

RECOMMENDED BY THE SAN DIEGO REGIONAL STANDARDS COMMITTEE

Chairperson R.C.E. 19246 Date 3/10/2003

DRAWING NUMBER D-77H

METRIC TABLE – SPAN 3.05m (all measuements in millimeters unless otherwise noted).
For Imperial table (10' Span) – see drawing D77J

SPAN			3.05m																
HEIGHT			1.52m			1.83m			2.13m			2.44m				3.05m			
STRENGTH CLASSIFICATION			A	B	C	A	B	C	A	B	C	A	B	C	D	A	B	C	D
MAX FILL OVER TOP			610mm	5.18m	9.14m	610mm	5.18m	9.14m	610mm	5.18m	9.14m	610mm	4.88m	8.84m	11m	610mm	4.88m	8.84m	11m
Conc.	Top Slab	T	222	324	406	222	324	406	222	324	406	222	324	406	438	222	324	406	445
Conc.	Bottom Slab	T_2	210	343	419	210	343	419	210	349	425	222	343	419	464	222	343	419	470
Conc.	Sidewalls	T_3	152	152	152	152	152	152	152	165	179	179	179	191	191	203	203	229	254
Reinforcing Steel	"a"	Size Bar #	19	13	13	19	13	13	19	13	13	19	13	13	13	19	13	13	13
Reinforcing Steel	"a"	Spacing	279	254	254	279	241	254	279	241	254	279	254	254	229	279	254	254	229
Reinforcing Steel	"a"	Length	6.81m	6.76m	6.76m	6.81m	6.76m	6.76m	6.81m	6.81m	6.83m	6.88m	6.83m	6.88m	6.96m	6.96m	6.91m	6.99m	7.06m
Reinforcing Steel	"b" or "b_1"	Size Bar #	19	22	25	19	22	25	19	22	25	19	22	25	25	19	22	25	25
Reinforcing Steel	"b" or "b_1"	Spacing	279	254	254	279	241	254	279	241	254	279	254	254	229	279	254	254	229
Reinforcing Steel	"b" or "b_1"	Length "b"	6.58m	6.65m	6.71m	6.58m	6.65m	6.71m	6.58m	6.68m	6.78m	6.65m	6.73m	6.81m	6.93m	6.73m	6.81m	6.93m	7.04m
Reinforcing Steel	"b" or "b_1"	Length "b_1"	6.53m	6.65m	6.71m	6.53m	6.65m	6.71m	6.53m	6.68m	6.78m	6.63m	6.71m	6.81m	6.93m	6.71m	6.78m	6.91m	7.06m
Reinforcing Steel	"c"	Size Bar #	19	22	25	19	22	25	19	22	25	19	22	25	25	19	22	25	25
Reinforcing Steel	"c"	Spacing	279	254	254	279	241	254	279	241	254	279	254	254	229	279	254	254	229
Reinforcing Steel	"c"	Length	3.20m	3.20m	3.20m	3.20m	3.20m	3.20m	3.20m	3.23m	3.23m	3.23m	3.23m	3.25m	3.28m	3.25m	3.25m	3.28m	3.30m
Reinforcing Steel	"d" Dist Bars	Top Slab–Tot. No.	10	10	10	10	10	10	18	10	10	18	10	10	10	18	10	10	10
Reinforcing Steel	"d" Dist Bars	Bottom Slab–Tot. No.	10	10	10	10	10	10	10	10	10	10	10	10	10	10	10	10	10
Reinforcing Steel	"e" Bars	Size Bar #	13	13	16	13	13	16	13	13	19	13	16	19	22	13	19	19	22
Reinforcing Steel	"e" Bars	Spacing	457	254	254	457	152	165	356	152	203	279	216	152	152	191	178	140	127
Reinforcing Steel	Spacers	Number	48			48			51			54			64	68			
Quan.	Concrete: cu m per lin. ft.		1.07	1.57	1.88	1.10	1.58	1.90	1.15	1.67	2.02	1.28	1.74	2.09	2.32	1.47	1.92	2.33	2.61
Quan.	Reinf: kg per lin. ft.		107	115	141	108	124	147	110	127	154	114	126	161	195	127	148	181	216

Note

For boxes of height less than that shown in table, use next greater table height slabs, wall dimensions and reinforcing steel, and make necessary changes in bar lengths, number of spacers and quantities. Number of "d" bars in table is slab total for both cells.

This drawing is NOT in conformance with latest UBC and should be used with care and judgment.

Revision	By	Approved	Date
ORIGINAL		Kercheval	12/75
Add Metric		T. Stanton	03/03

SAN DIEGO REGIONAL STANDARD DRAWING

DOUBLE BOX CULVERT
DETAILS No. 1

RECOMMENDED BY THE SAN DIEGO REGIONAL STANDARDS COMMITTEE

Chairperson R.C.E. 19246 Date 3/10/2003

DRAWING NUMBER D-771

IMPERIAL TABLE - SPAN 10' (all measuements in feet and/or inches unless otherwise noted).

For Metric Table (3.05m Span) - see drawing D771

SPAN			10'																
HEIGHT			5'			6'			7'			8'				10'			
STRENGTH CLASSIFICATION			A	B	C	A	B	C	A	B	C	A	B	C	D	A	B	C	D
MAX FILL OVER TOP			2	17	30	2	17	30	2	17	30	2	16	29	36	2	16	29	36
Conc.	Top Slab	T_1	8 3/4	12 3/4	16	8 3/4	12 3/4	16	8 3/4	12 3/4	16	8 3/4	12 3/4	16	17 1/4	8 3/4	12 3/4	16	17 1/2
Conc.	Bottom Slab	T_2	8 1/4	13 1/2	16 1/2	8 1/4	13 1/2	16 1/2	8 1/4	13 3/4	16 3/4	8 3/4	13 1/2	16 1/2	18 1/4	8 3/4	13 1/2	16 1/2	18 1/2
Conc.	Sidewalls	T_3	6	6	6	6	6	6	6	6 1/2	7	7	7	7 1/2	7 1/2	8	8	9	10
Reinforcing Steel	"a"	Size Bar #	6	4	4	6	4	4	6	4	4	6	4	4	4	6	4	4	4
Reinforcing Steel	"a"	Spacing	11	10	10	11	9 1/2	10	11	9 1/2	10	11	10	10	9	11	10	10	9
Reinforcing Steel	"a"	Length	22-4	22-2	22-2	22-4	22-2	22-2	22-4	22-4	22-5	22-7	22-5	22-7	22-10	22-10	22-8	22-11	23-2
Reinforcing Steel	"b" or "b_1"	Size Bar #	6	7	8	6	7	8	6	7	8	6	7	8	8	6	7	8	8
Reinforcing Steel	"b" or "b_1"	Spacing	11	10	10	11	9 1/2	10	11	9 1/2	10	11	10	10	9	11	10	10	9
Reinforcing Steel	"b" or "b_1"	Length "b"	21-7	21-10	22-0	21-7	21-10	22-0	21-7	21-11	22-3	21-10	22-1	22-4	22-9	22-1	22-4	22-9	23-1
Reinforcing Steel	"b" or "b_1"	Length "b_1"	21-5	21-10	22-0	21-5	21-10	22-0	21-5	21-11	22-3	21-9	22-0	22-4	22-9	22-0	22-3	22-8	23-2
Reinforcing Steel	"c"	Size Bar #	6	7	8	6	7	8	6	7	8	6	7	8	8	6	7	8	8
Reinforcing Steel	"c"	Spacing	11	10	10	11	9 1/2	10	11	9 1/2	10	11	10	10	9	11	10	10	9
Reinforcing Steel	"c"	Length	10-6	10-6	10-6	10-6	10-6	10-6	10-6	10-7	10-7	10-7	10-7	10-8	10-9	10-8	10-8	10-9	10-10
Reinforcing Steel	"d" Dist Bars	Top Slab-Tot. No.	18	10	10	18	10	10	18	10	10	18	10	10	10	18	10	10	10
Reinforcing Steel	"d" Dist Bars	Bottom Slab-Tot. No.	10	10	10	10	10	10	10	10	10	10	10	10	10	10	10	10	10
Reinforcing Steel	"e" Bars	Size Bar #	4	4	5	4	4	5	4	4	6	4	5	6	7	4	6	6	7
Reinforcing Steel	"e" Bars	Spacing	18	10	10	18	6	6 1/2	14	6	8	11	8 1/2	6	6	7 1/2	7	5 1/2	5
Reinforcing Steel	Spacers	Number	48			48			51			54			64	68			
Quan.	Concrete: C.Y. per lin. ft.		1.40	2.05	2.46	1.45	2.07	2.48	1.51	2.18	2.64	1.68	2.27	2.74	3.04	1.92	2.51	3.05	3.41
Quan.	Reinf :lbs per lin. ft.		236	254	310	238	274	324	243	280	339	252	278	355	430	279	327	400	476

Note

For boxes of height less than that shown in table, use next greater table height slabs, wall dimensions and reinforcing steel, and make necessary changes in bar lengths, number of spacers and quantities. Number of "d" bars in table is slab total for both cells.

This drawing is NOT in conformance with latest UBC and should be used with care and judgment.

Revision	By	Approved	Date
ORIGINAL		Kerchevgl	12/75
Add Metric		T. Stanton	03/03

SAN DIEGO REGIONAL STANDARD DRAWING

DOUBLE BOX CULVERT

DETAILS No. 1

RECOMMENDED BY THE SAN DIEGO REGIONAL STANDARDS COMMITTEE

Chairperson R.C.E. 19246 Date 3/01/2003

DRAWING NUMBER D-77J

SPAN			12'																			
HEIGHT			6'			7'			8'			9'				10'				12'			
STRENGTH CLASSIFICATION			A	B	C	A	B	C	A	B	C	A	B	C	D	A	B	C	D	A	B	C	D
MAX FILL OVER TOP			610mm	4.27m	7.9m	610mm	4.27m	7.9m	610mm	4.27m	7.9m	610mm	4.27m	7.9m	11m	610mm	4.27m	7.9m	11m	610mm	4.27m	7.9m	11m
Conc.	Top Slab	T_1	254	356	445	254	362	445	260	362	451	260	368	451	527	260	368	451	527	260	368	464	540
Conc.	Bottom Slab	T_2	235	375	457	235	381	464	248	381	470	254	387	476	540	260	387	476	546	267	387	489	559
Conc.	Sidewalls	T_3	152	152	165	178	178	178	203	203	216	229	229	229	254	229	229	241	279	229	254	279	305
Reinforcing Steel	"a"	Size Bar #	19	13	13	19	13	13	19	13	13	19	13	13	13	19	13	13	13	19	13	13	13
		Spacing	229	292	229	229	292	229	229	279	216	229	279	216	229	229	279	216	229	229	279	216	229
		Length	8.03m	7.98m	8.03m	8.10m	8.05m	8.05m	8.18m	8.13m	8.18m	8.26m	8.20	8.20	8.26m	8.26m	8.20	8.31m	8.36m	8.26m	8.28m	8.36m	8.43m
	"b" or "b_1"	Size Bar #	19	25	25	19	25	25	19	25	25	19	25	25	29	19	25	25	29	19	25	25	29
		Spacing	229	292	229	229	292	229	229	279	216	229	279	216	229	229	279	216	229	229	279	216	229
		Length "b"	7.82m	7.87m	8.00m	7.90m	7.95m	8.03m	7.98m	8.03m	8.15m	8.05m	8.13m	8.18m	8.33m	8.05m	8.13m	8.28m	8.38m	8.05m	8.20	8.36m	8.48m
		Length "b_1"	7.77m	7.87m	8.00m	7.85m	7.98m	8.03m	7.95m	8.05m	8.15m	8.03m	8.13m	8.20	8.33m	8.03m	8.13m	8.28m	8.41m	8.03m	8.20	8.36m	8.51m
	"c"	Size Bar #	16	25	25	16	25	25	16	25	25	16	25	25	29	16	25	25	29	16	25	25	29
		Spacing	229	292	229	229	292	229	229	279	216	229	279	216	229	229	279	216	229	229	279	216	229
		Length	3.81m	3.81m	3.84m	3.84m	3.84m	3.84m	3.86m	3.86m	3.89m	3.89m	3.89m	3.89m	3.91m	3.89m	3.89m	3.91m	3.94m	3.89m	3.91m	3.94m	3.96m
	"d" Dist Bars	Top Slab–Tot. No.	24	10	10	24	10	10	24	10	10	24	10	10	10	24	10	10	10	24	10	10	10
		Bottom Slab–Tot. No.	10	10	10	10	10	10	10	10	10	10	10	10	10	10	10	10	10	10	10	10	10
	"e" Bars	Size Bar #	13	13	16	13	13	16	13	13	16	13	16	22	25	13	22	25	25	19	22	25	29
		Spacing	457	203	203	381	152	165	305	140	152	229	191	216	203	216	11	216	229	305	203	178	178
	Spacers	Number	52			55			68			68				72				76			
Quan.	Concrete: cu m per lin. ft.		1.41	1.98	2.42	1.51	2.12	2.51	1.67	2.24	2.74	1.82	.57	2.82	3.25	1.90	2.47	2.95	3.43	2.04	2.70	3.29	3.76
Quan.	Reinf: kg per lin. ft.		140	144	182	142	150	188	152	165	209	156	170	211	262	159	179	235	264	168	194	257	305

Note

For boxes of height less than that shown in table, use next greater table height slabs, wall dimensions and reinforcing steel, and make necessary changes in bar lengths, number of spacers and quantities. Number of "d" bars in table is slab total for both cells.

This drawing is NOT in conformance with latest UBC and should be used with care and judgment.

Revision	By	Approved	Date
ORIGINAL		Kercheval	12/75
Add Metric		T. Stanton	03/03

SAN DIEGO REGIONAL STANDARD DRAWING

DOUBLE BOX CULVERT

DETAILS No. 1

RECOMMENDED BY THE SAN DIEGO REGIONAL STANDARDS COMMITTEE

Chairperson R.C.E. 19246 Date 3/10/2003

DRAWING NUMBER D-77K

Revision	By	Approved	Date
ORIGINAL		Kercheval	12/75
Add Metric		T. Stanton	03/03

SAN DIEGO REGIONAL STANDARD DRAWING

DOUBLE BOX CULVERT

DETAILS No. 1

IMPERIAL TABLE – SPAN 12' (all measuements in feet and/or inches unless otherwise noted).

For Metric Table (3.66m Span) – see drawing D77K

SPAN			12'																			
HEIGHT			6'			7'			8'			9'				10'				12'			
STRENGTH CLASSIFICATION			A	B	C	A	B	C	A	B	C	A	B	C	D	A	B	C	D	A	B	C	D
MAX FILL OVER TOP			2	14	26	2	14	26	2	14	26	2	14	26	36	2	14	26	36	2	14	26	36
Conc.	Top Slab	T_1	10	14	17 1/2	10	14 1/4	17 1/2	10 1/4	14 1/4	17 3/4	10 1/4	14 1/2	17 3/4	20 3/4	10 1/4	14 1/2	17 3/4	20 3/4	10 1/4	14 1/2	18 1/4	21 1/4
Conc.	Bottom Slab	T_2	9 1/4	14 3/4	18	9 1/4	15	18 1/4	9 3/4	15	18 1/2	10	15 1/4	18 3/4	21 1/4	10 1/4	15 1/4	18 3/4	21 1/2	10 1/2	15 1/4	19 1/4	22
Conc.	Sidewalls	T_3	6	6	6 1/2	7	7	7	8	8	8 1/2	9	9	9	10	9	9	9 1/2	11	9	10	11	12
Reinforcing Steel	"a"	Size Bar #	6	4	4	6	4	4	6	4	4	6	4	4	4	6	4	4	4	6	4	4	4
		Spacing	9	11 1/2	9	9	11 1/2	9	9	11	8 1/2	9	11	8 1/2	9	9	11	8 1/2	9	9	11	8 1/2	9
		Length	26-4	26-2	26-4	26-7	26-5	26-5	26-10	26-8	26-10	27-1	26-11	26-11	27-1	27-1	26-11	27-3	27-5	27-1	27-2	27-5	27-8
	"b" or "b_1"	Size Bar #	6	8	8	6	8	8	6	8	8	6	8	8	9	6	8	8	9	6	8	8	9
		Spacing	9	11 1/2	9	9	11 1/2	9	9	11	8 1/2	9	11	8 1/2	9	9	11	8 1/2	9	9	11	8 1/2	9
		Length "b"	25-8	25-10	26-3	25-11	26-1	26-4	26-2	26-4	26-9	26-5	26-8	26-10	27-4	26-5	26-8	27-2	27-6	26-5	26-11	27-5	27-10
		Length "b_1"	25-6	25-10	26-3	25-9	26-2	26-4	26-1	26-5	26-9	26-4	26-8	26-11	27-4	26-4	26-8	27-2	27-7	26-4	26-11	27-5	27-11
	"c"	Size Bar #	5	8	8	5	8	8	5	8	8	5	8	8	9	5	8	8	9	5	8	8	9
		Spacing	9	11 1/2	9	9	11 1/2	9	9	11	8 1/2	9	11	8 1/2	9	9	11	8 1/2	9	9	11	8 1/2	9
		Length	12-6	12-6	12-7	12-7	12-7	12-7	12-8	12-8	12-9	12-9	12-9	12-9	12-10	12-9	12-9	12-10	12-11	12-9	12-10	12-11	13-0
	"d" Dist Bars	Top Slab-Tot. No.	24	10	10	24	10	10	24	10	10	24	10	10	10	24	10	10	10	24	10	10	10
		Bottom Slab-Tot. No.	10	10	10	10	10	10	10	10	10	10	10	10	10	10	10	10	10	10	10	10	10
	"e" Bars	Size Bar #	4	4	5	4	4	5	4	4	5	4	5	7	8	4	7	8	8	6	7	8	9
		Spacing	18	8	8	15	6	6 1/2	12	5 1/2	6	9	7 1/2	8 1/2	8	8 1/2	11	8 1/2	9	12	8	7	7
	Spacers	Number	52			55			68			68				72				76			
Quan.	Concrete: C.Y. per lin. ft.		1.84	2.59	3.16	1.97	2.77	3.28	2.19	2.93	3.59	2.38	0.74	3.69	4.25	2.48	3.23	3.86	4.49	2.67	3.53	4.30	4.92
Quan.	Reinf :lbs per lin. ft.		309	317	401	316	330	415	336	363	460	345	374	485	578	351	394	519	582	371	427	567	673

Note

For boxes of height less than that shown in table, use next greater table height slabs, wall dimensions and reinforcing steel, and make necessary changes in bar lengths, number of spacers and quantities. Number of "d" bars in table is slab total for both cells.

RECOMMENDED BY THE SAN DIEGO REGIONAL STANDARDS COMMITTEE

T. Stanton 3/10/2003

Chairperson R.C.E. 19246 Date

DRAWING NUMBER D-77L

This drawing is NOT in conformance with latest UBC and should be used with care and judgment.

This drawing is NOT in conformance with latest UBC and should be used with care and judgment.

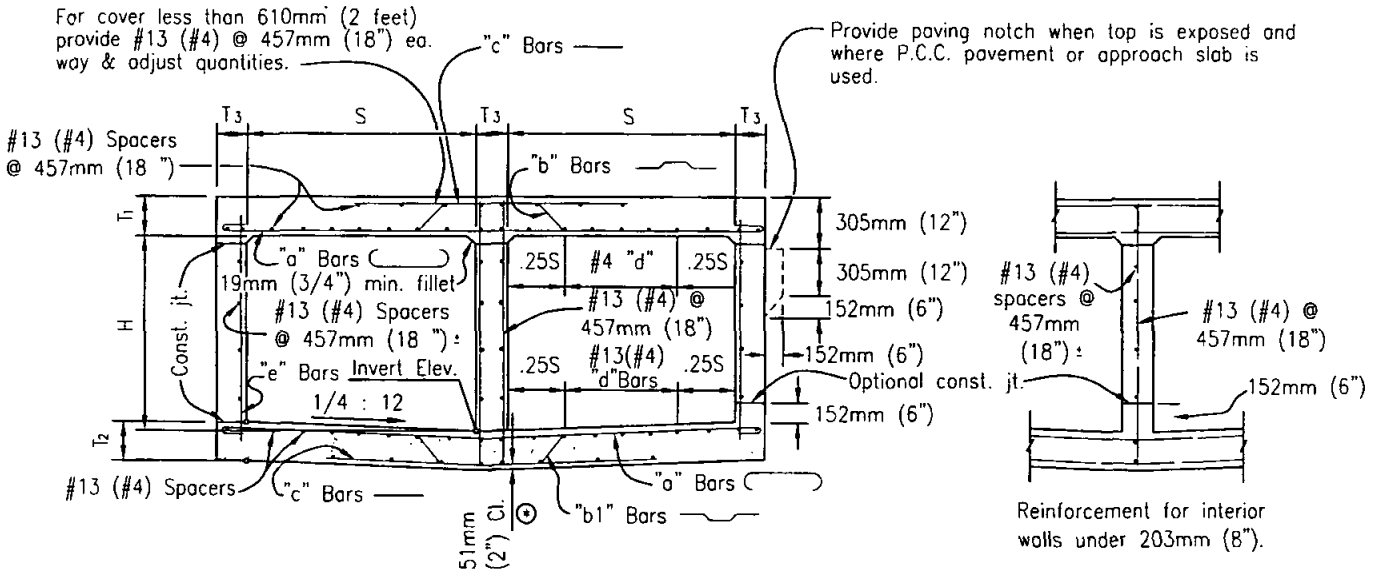

TYPICAL SECTION

(Showing reinforcement for interior walls 203mm (8") and over.)

⊕ For reinforcement clearance, except at bottom, see "Miscellaneous Details."

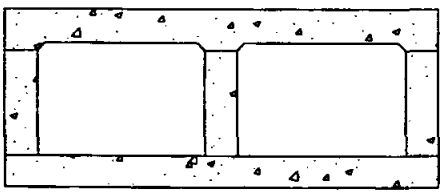

"FLAT INVERT" ALTERNATIVE

(When shown)

Revision	By	Approved	Date
ORIGINAL		Kercheval	12/75
Add Metric		T. Stanton	03/03

SAN DIEGO REGIONAL STANDARD DRAWING

DOUBLE BOX CULVERT
DETAILS NO. 2

RECOMMENDED BY THE SAN DIEGO REGIONAL STANDARDS COMMITTEE

T. Stanton 3/10/2003

Chairperson R.C.E. 19246 Date

DRAWING NUMBER D-77M

METRIC TABLE – SPAN 1.22m (all measuements in millimeters unless otherwise noted).
For Imperial table (4' Span) – see drawing D78B

SPAN			1.22m								
HEIGHT			610mm			914mm			1.22m		
STRENGTH CLASSIFICATION			A	B	C	A	B	C	A	B	C
MAX FILL OVER TOP			3m	7.3m	11.6m	3m	7.3m	11.6m	3m	7.3m	11.6m
Conc.	Top Slab	T_1	159	159	184	159	159	184	159	159	184
Conc.	Bottom Slab	T_2	152	178	210	152	178	210	152	178	210
Conc.	Sidewalls	T_3	152	152	152	152	152	152	152	152	152
Reinforcing Steel	"a"	Size Bar #	16	13	16	16	13	16	16	13	16
		Spacing	279	286	330	279	286	330	279	286	330
		Length	4.50m	4.47m	4.50m	4.50m	4.47m	4.50m	4.50m	4.47m	4.50m
	"b" or "b_1"	Size Bar #	16	16	19	16	16	19	16	16	19
		Spacing	279	286	330	279	286	330	279	286	330
		Length "b"	4.32m	4.32m	4.34m	4.32m	4.32m	4.34m	4.32m	4.32m	4.34m
		Length "b_1"	4.27m	4.32m	4.34m	4.27m	4.32m	4.34m	4.27m	4.32m	4.34m
	"c"	Size Bar #	13	16	19	13	16	19	13	16	19
		Spacing	279	286	330	279	286	330	279	286	330
		Length	2.74m	2.74m	2.74m	2.74m	2.74m	2.74m	2.74m	2.74m	2.74m
	"d" Dist Bars	Top Slab–Tot. No.	15	9	9	15	9	9	15	9	9
		Bottom Slab–Tot. No.	9	9	9	9	9	9	9	9	9
	"e" Bars	Size Bar #	13	13	13	13	13	13	13	13	16
		Spacing	457	457	457	457	457	330	457	286	330
	Spacers	Number		34			38			42	
Quan.	Concrete: cu m per lin. ft.		0.51	0.54	0.62	0.57	0.60	0.68	0.63	0.66	0.73
	Reinf: kg per lin. ft.		55	50	60	58	52	63	59	55	67

Note

For boxes of height less than that shown in table, use next greater table height slabs, wall dimensions and reinforcing steel, and make necessary changes in bar lengths, number of spacers and quantities. Number of "d" bars in table is slab total for both cells.

This drawing is NOT in conformance with latest UBC and should be used with care and judgment.

Revision	By	Approved	Date
ORIGINAL		Kercheval	12/75
Add Metric		T. Stanton	03/03

SAN DIEGO REGIONAL STANDARD DRAWING

TRIPLE BOX CULVERT
DETAILS No. 1

RECOMMENDED BY THE SAN DIEGO REGIONAL STANDARDS COMMITTEE

Chairperson R.C.E. 19246 Date 3/10/2003

DRAWING NUMBER D-78A

IMPERIAL TABLE – SPAN 4' (all measuements in feet and/or inches).

For Metric table (1.22m Span) – see drawing D78A

SPAN			4'								
HEIGHT			2'			3'			4'		
STRENGTH CLASSIFICATION			A	B	C	A	B	C	A	B	C
MAX FILL OVER TOP			10	24	38	10	24	38	10	24	38
Conc.	Top Slab	T_1	6 1/4	6 1/4	7 1/4	6 1/4	6 1/4	7 1/4	6 1/4	6 1/4	7 1/4
Conc.	Bottom Slab	T_2	6	7	8 1/4	6	7	8 1/4	6	7	8 1/4
Conc.	Sidewalls	T_3	6	6	6	6	6	6	6	6	6
Reinforcing Steel	"a"	Size Bar #	5	4	5	5	4	5	5	4	5
		Spacing	11	11 1/2	13	11	11 1/2	13	11	11 1/2	13
		Length	14-9	14-8	14-9	14-9	14-8	14-9	14-9	14-8	14-9
	"b" or "b_1"	Size Bar #	5	5	6	5	5	6	5	5	6
		Spacing	11	11 1/2	13	11	11 1/2	13	11	11 1/2	13
		Length "b"	14-2	14-2	14-3	14-2	14-2	14-3	14-2	14-2	14-3
		Length "b_1"	14-0	14-2	14-3	14-0	14-2	14-3	14-0	14-2	14-3
	"c"	Size Bar #	4	5	6	4	5	6	4	5	6
		Spacing	11	11 1/2	13	11	11 1/2	13	11	11 1/2	13
		Length	9-0	9-0	9-0	9-0	9-0	9-0	9-0	9-0	9-0
	"d" Dist Bars	Top Slab-Tot. No.	15	9	9	15	9	9	15	9	9
		Bottom Slab-Tot. No.	9	9	9	9	9	9	9	9	9
	"e" Bars	Size Bar #	4	4	4	4	4	4	4	4	5
		Spacing	18	18	18	18	18	13	18	11 1/2	13
	Spacers	Number		34			38			42	
Quan.	Concrete: C.Y. per lin. ft.		0.67	0.71	0.81	0.75	0.79	0.89	0.82	0.86	0.96
	Reinf :lbs per lin. ft.		122	110	133	127	115	138	131	122	147

Note

For boxes of height less than that shown in table, use next greater table height slabs, wall dimensions and reinforcing steel, and make necessary changes in bar lengths, number of spacers and quantities. Number of "d" bars in table is slab total for both cells.

This drawing is NOT in conformance with latest UBC and should be used with care and judgment.

Revision	By	Approved	Date
ORIGINAL		Kercheval	12/75
Add Metric		T. Stanton	03/03

SAN DIEGO REGIONAL STANDARD DRAWING

TRIPLE BOX CULVERT

DETAILS No. 1

RECOMMENDED BY THE SAN DIEGO REGIONAL STANDARDS COMMITTEE

Chairperson R.C.E. 19246 Date 3/10/2003

DRAWING NUMBER D-78B

METRIC TABLE – SPAN 1.52m (all measuements in millimeters unless otherwise noted).
For Imperial table (5' Span) – see drawing D78B

SPAN			1.52m													
HEIGHT			610mm			914mm			1.22m				1.52m			
STRENGTH CLASSIFICATION			A	B	C	A	B	C	A	B	C	D	A	B	C	D
MAX FILL OVER TOP			2.4m	5.2m	7.9m	2.4m	5.2m	7.9m	2.4m	5.2m	7.9m	10.7m	2.4m	5.2m	7.9m	10.7m
Conc.	Top Slab	T_1	171	171	191	171	171	191	171	171	191	216	171	171	191	216
Conc.	Bottom Slab	T_2	159	184	216	159	184	216	159	184	216	241	159	191	216	241
Conc.	Sidewalls	T_3	152	152	152	152	152	152	152	152	152	152	152	152	152	152
Reinforcing Steel	"a"	Size Bar #	16	13	16	16	13	16	5	4	5	5	5	4	5	5
		Spacing	254	286	330	254	286	330	254	279	330	286	254	279	330	286
		Length	5.41m	5.38m	5.41m	5.41m	5.38m	5.41m	5.41m	5.38m	5.41m	5.41m	5.41m	5.38m	5.41m	5.41m
	"b" or "b_1"	Size Bar #	16	16	19	16	16	19	16	16	19	19	16	16	19	19
		Spacing	254	286	13	254	286	330	254	279	330	286	254	279	330	286
		Length "b"	5.26m	5.26m	5.26m	5.26m	5.26m	5.26m	5.26m	5.26m	5.26m	5.26m	5.26m	5.26m	5.26m	5.31m
		Length "b_1"	5.18m	5.23m	5.28m	5.18m	5.23m	5.28m	5.18m	5.23m	5.28m	5.31m	5.18m	5.23m	5.28m	5.31m
	"c"	Size Bar #	13	16	19	13	16	19	13	16	19	19	13	16	19	19
		Spacing	254	286	330	254	286	330	254	279	330	286	254	279	330	286
		Length	3.35m	3.35m	3.35m	3.35m	3.35m	3.35m	3.35m	3.35m	3.35m	3.35m	3.35m	3.35m	3.35m	3.35m
	"d" Dist Bars	Top Slab–Tot. No.	18	9	9	18	9	9	18	9	9	9	18	9	9	9
		Bottom Slab–Tot. No.	9	9	9	9	9	9	9	9	9	9	9	9	9	9
	"e" Bars	Size Bar #	13	13	13	13	13	13	13	13	13	16	13	13	13	19
		Spacing	457	457	457	457	457	457	457	432	286	286	457	279	102	286
	Spacers	Number	34			38			38				42			
Quan.	Concrete: cu m per lin. ft.		0.63	0.66	0.75	0.69	0.73	0.80	0.74	0.78	0.86	0.94	0.80	0.85	0.92	1.00
Quan.	Reinf: kg per lin. ft.		68	57	69	70	59	71	71	62	73	82	73	65	78	87

Note

For boxes of height less than that shown in table, use next greater table height slabs, wall dimensions and reinforcing steel, and make necessary changes in bar lengths, number of spacers and quantities. Number of "d" bars in table is slab total for both cells.

This drawing is NOT in conformance with latest UBC and should be used with care and judgment.

Revision	By	Approved	Date
ORIGINAL		Kercheval	12/75
Add Metric		T. Stanton	03/03

SAN DIEGO REGIONAL STANDARD DRAWING

TRIPLE BOX CULVERT

DETAILS No. 1

RECOMMENDED BY THE SAN DIEGO REGIONAL STANDARDS COMMITTEE

Chairperson R.C.E. 19246 Date 3/10/2003

DRAWING NUMBER D-78C

IMPERIAL TABLE – SPAN 5' (all measuements in feet and/or inches).

For Metric table (1.52m Span) – see drawing D78C

SPAN			5'													
HEIGHT			2'			3'			4'				5'			
STRENGTH CLASSIFICATION			A	B	C	A	B	C	A	B	C	D	A	B	C	D
MAX FILL OVER TOP			8	17	26	8	17	26	8	17	26	35	8	17	26	35
Conc.	Top Slab	T_1	6 3/4	6 3/4	7 1/2	6 3/4	6 3/4	7 1/2	6 3/4	6 3/4	7 1/2	8 1/2	6 3/4	6 3/4	7 1/2	8 1/2
Conc.	Bottom Slab	T_2	6 1/4	7 1/4	8 1/2	6 1/4	7 1/4	8 1/2	6 1/4	7 1/4	8 1/2	9 1/2	6 1/4	7 1/2	8 1/2	9 1/2
Conc.	Sidewalls	T_3	6	6	6	6	6	6	6	6	6	6	6	6	6	6
Reinforcing Steel	"a"	Size Bar #	5	4	5	5	4	5	5	4	5	5	5	4	5	5
		Spacing	10	11 1/2	13	10	11 1/2	13	10	11	13	11 1/2	10	11	13	11 1/2
		Length	17-9	17-8	17-9	17-9	17-8	17-9	17-9	17-8	17-9	17-9	17-9	17-8	17-9	17-9
	"b" or "b_1"	Size Bar #	5	5	6	5	5	6	5	5	6	6	5	5	6	6
		Spacing	10	11 1/2	13	10	11 1/2	13	10	11	13	11 1/2	10	11	13	11 1/2
		Length "b"	17-3	17-3	17-3	17-3	17-3	17-3	17-3	17-3	17-3	17-3	17-3	17-3	17-3	17-5
		Length "b_1"	17-0	17-2	17-4	17-0	17-2	17-4	17-0	17-2	17-4	17-5	17-0	17-2	17-4	17-5
	"c"	Size Bar #	4	5	6	4	5	6	4	5	6	6	4	5	6	6
		Spacing	10	11 1/2	13	10	11 1/2	13	10	11	13	11 1/2	10	11	13	11 1/2
		Length	11-0	11-0	11-0	11-0	11-0	11-0	11-0	11-0	11-0	11-0	11-0	11-0	11-0	11-0
	"d" Dist Bars	Top Slab-Tot. No.	18	9	9	18	9	9	18	9	9	9	18	9	9	9
		Bottom Slab-Tot. No.	9	9	9	9	9	9	9	9	9	9	9	9	9	9
	"e" Bars	Size Bar #	4	4	4	4	4	4	4	4	4	5	4	4	4	6
		Spacing	18	18	18	18	18	18	18	17	11 1/2	11 1/2	18	11	4	11 1/2
	Spacers	Number	34			38			38				42			
Quan.	Concrete: C.Y. per lin. ft.		0.82	0.87	0.98	0.90	0.95	1.05	0.97	1.02	1.13	1.23	1.04	1.11	1.20	1.31
Quan.	Reinf :lbs per lin. ft.		150	126	153	155	130	157	157	136	161	181	161	143	171	192

Note

For boxes of height less than that shown in table, use next greater table height slabs, wall dimensions and reinforcing steel, and make necessary changes in bar lengths, number of spacers and quantities. Number of "d" bars in table is slab total for both cells.

This drawing is NOT in conformance with latest UBC and should be used with care and judgment.

Revision	By	Approved	Date
ORIGINAL		Kercheval	12/75
Add Metric		T. Stanton	03/03

SAN DIEGO REGIONAL STANDARD DRAWING

TRIPLE BOX CULVERT

DETAILS No. 1

RECOMMENDED BY THE SAN DIEGO REGIONAL STANDARDS COMMITTEE

Chairperson R.C.E. 19246 Date 3/10/2003

DRAWING NUMBER D-78D

METRIC TABLE – SPAN 1.83m (all measuements in millimeters unless otherwise noted).
For Imperial table (6' Span) – see drawing D78F

SPAN			1.83m													
HEIGHT			914mm			1.22m			1.52m				1.83m			
STRENGTH CLASSIFICATION			A	B	C	A	B	C	A	B	C	D	A	B	C	D
MAX FILL OVER TOP			1.2m	6.1m	10.4m	1.2m	6.1m	10.4m	1.2m	5.8m	10m	13.1m	1.2m	5.8m	10m	13.1m
Conc.	Top Slab	T_1	184	210	267	184	210	267	184	210	267	305	184	210	267	305
Conc.	Bottom Slab	T_2	184	241	292	184	241	292	184	241	292	324	184	241	292	324
Conc.	Sidewalls	T_3	152	152	152	152	152	152	152	152	152	152	152	152	152	191
Reinforcing Steel	"a"	Size Bar #	16	13	13	16	13	13	16	13	13	13	16	13	13	13
Reinforcing Steel	"a"	Spacing	241	279	216	241	279	216	241	279	216	267	241	279	216	267
Reinforcing Steel	"a"	Length	4.34m	4.32m	4.32m	4.34m	4.32m	4.32m	4.34m	4.32m	4.32m	4.32m	4.34m	4.32m	4.32m	4.47m
Reinforcing Steel	"b" or "b_1"	Size Bar #	16	19	19	16	19	19	16	19	19	22	16	19	19	22
Reinforcing Steel	"b" or "b_1"	Spacing	241	279	216	241	279	216	241	279	216	267	241	279	216	267
Reinforcing Steel	"b" or "b_1"	Length "b"	4.11m	4.11m	4.17m	4.11m	4.11m	4.17m	4.11m	4.11m	4.17m	4.19m	4.11m	4.11m	4.17m	4.32m
Reinforcing Steel	"b" or "b_1"	Length "b_1"	4.09m	4.14m	4.17m	4.09m	4.14m	4.17m	4.09m	4.11m	4.17m	4.19m	4.11m	4.11m	4.17m	4.32m
Reinforcing Steel	"c"	Size Bar #	13	19	19	13	19	19	13	19	19	22	13	19	19	22
Reinforcing Steel	"c"	Spacing	241	279	216	241	279	216	241	279	216	267	241	279	216	267
Reinforcing Steel	"c"	Length	1.98m	1.98m	1.98m	1.98m	1.98m	1.98m	1.98m	1.98m	1.98m	1.98m	1.98m	1.98m	1.98m	2.03m
Reinforcing Steel	"d" Dist Bars	Top Slab–Tot. No.	12	6	6	12	6	6	12	6	6	6	12	6	6	6
Reinforcing Steel	"d" Dist Bars	Bottom Slab–Tot. No.	6	6	6	6	6	6	6	6	6	6	6	6	6	6
Reinforcing Steel	"e" Bars	Size Bar #	13	13	13	13	13	13	13	13	16	16	13	16	19	19
Reinforcing Steel	"e" Bars	Spacing	457	457	406	457	356	216	457	254	241	178	457	279	229	152
Reinforcing Steel	Spacers	Number	30			33			36				36			
Quan.	Concrete: cu m per lin. ft.		0.59	0.69	0.83	0..63	0.73	0.86	.67	.77	.91	.99	0.71	.82	.96	1.12
Quan.	Reinf: kgs per lin. ft.		55	54	67	57	56	70	58	59	74	79	59	62	80	91

Note

For boxes of height less than that shown in table, use next greater table height slabs, wall dimensions and reinforcing steel, and make necessary changes in bar lengths, number of spacers and quantities. Number of "d" bars in table is slab total for both cells.

This drawing is NOT in conformance with latest UBC and should be used with care and judgment.

Revision	By	Approved	Date
ORIGINAL		Kercheval	12/75
Add Metric		T. Stanton	03/03

SAN DIEGO REGIONAL STANDARD DRAWING

DOUBLE BOX CULVERT
DETAILS No. 1

RECOMMENDED BY THE SAN DIEGO REGIONAL STANDARDS COMMITTEE

Chairperson R.C.E. 19246 Date 3/01/2003

DRAWING NUMBER D-78E

IMPERIAL TABLE - SPAN 6' (all measuements in feet and/or inches).

For Metric table (1.83m Span) - see drawing D78E

SPAN			6'													
HEIGHT			3'			4'			5'				6'			
STRENGTH CLASSIFICATION			A	B	C	A	B	C	A	B	C	D	A	B	C	D
MAX FILL OVER TOP			3	13	23	3	13	23	3	13	23	30	3	13	23	30
Conc.	Top Slab	T_1	7 1/2	7 1/2	8 1/4	7 1/2	7 1/2	8 1/4	7 1/2	7 1/2	8 1/4	9 1/4	7 1/2	7 1/2	8 1/4	9 1/4
Conc.	Bottom Slab	T_2	6	7 3/4	9 1/4	6	7 3/4	9 1/4	6	8	9 1/4	10	6	8	9 1/4	10 1/4
Conc.	Sidewalls	T_3	6	6	6	6	6	6	6	6	6	6	6	6	6	6
Reinforcing Steel	"a"	Size Bar #	6	5	5	6	5	5	6	5	5	5	6	5	5	5
Reinforcing Steel	"a"	Spacing	13	14	11 1/2	13	14	11 1/2	13	14	11 1/2	10	13	14	11 1/2	10
Reinforcing Steel	"a"	Length	20-10	20-9	20-9	20-10	20-9	20-9	20-10	20-9	20-9	20-9	20-10	20-9	20-9	20-9
Reinforcing Steel	"b" or "b_1"	Size Bar #	6	6	6	6	6	6	6	6	6	6	6	6	6	6
Reinforcing Steel	"b" or "b_1"	Spacing	13	14	11 1/2	13	14	11 1/2	13	14	11 1/2	10	13	14	11 1/2	10
Reinforcing Steel	"b" or "b_1"	Length "b"	20-3	20-3	20-5	20-3	20-3	20-5	20-3	20-3	20-5	20-6	20-3	20-3	20-5	20-6
Reinforcing Steel	"b" or "b_1"	Length "b_1"	20-0	20-2	20-5	20-0	20-2	20-5	20-0	20-2	20-5	20-6	20-0	20-0	20-5	20-7
Reinforcing Steel	"c"	Size Bar #	4	6	6	4	6	6	4	6	6	6	4	6	6	6
Reinforcing Steel	"c"	Spacing	13	14	11 1/2	13	14	11 1/2	13	14	11 1/2	10	13	14	11 1/2	10
Reinforcing Steel	"c"	Length	13-0	13-0	13-0	13-0	13-0	13-0	13-0	13-0	13-0	13-0	13-0	13-0	13-0	13-0
Reinforcing Steel	"d" Dist Bars	Top Slab-Tot. No.	18	9	9	18	9	9	18	9	9	9	18	9	9	9
Reinforcing Steel	"d" Dist Bars	Bottom Slab-Tot. No.	9	9	9	9	9	9	9	9	9	9	9	9	9	9
Reinforcing Steel	"e" Bars	Size Bar #	4	4	4	4	4	4	4	4	5	5	4	4	6	6
Reinforcing Steel	"e" Bars	Spacing	18	18	18	18	18	11 1/2	18	11 1/2	12	10	18	8	12	10
Reinforcing Steel	Spacers	Number	40			40			52				48			
Quan.	Concrete: C.Y. per lin. ft.		1.05	1.15	1.29	1.12	1.23	1.37	1.19	1.32	1.44	1.55	1.27	1.39	1.52	1.64
Quan.	Reinf :lbs per lin. ft.		181	168	196	183	170	200	187	177	209	235	192	187	221	249

Note

For boxes of height less than that shown in table, use next greater table height slabs, wall dimensions and reinforcing steel, and make necessary changes in bar lengths, number of spacers and quantities. Number of "d" bars in table is slab total for both cells.

This drawing is NOT in conformance with latest UBC and should be used with care and judgment.

Revision	By	Approved	Date
ORIGINAL		Kerchevel	12/75
Add Metric		T. Stanton	03/03

SAN DIEGO REGIONAL STANDARD DRAWING

TRIPLE BOX CULVERT

DETAILS No. 1

RECOMMENDED BY THE SAN DIEGO REGIONAL STANDARDS COMMITTEE

Chairperson R.C.E. 19246 Date 3/10/2003

DRAWING NUMBER D-78F

METRIC TABLE – SPAN 2.44m (all measuements in millimeters unless otherwise noted).
For Imperial table (8' Span) – see drawing D78BH

SPAN			2.44m																
HEIGHT			1.22m			1.52m			1.83m			2.13m				2.44m			
STRENGTH CLASSIFICATION			A	B	C	A	B	C	A	B	C	A	B	C	D	A	B	C	D
MAX FILL OVER TOP			610	3.4m	6.1m	610	3.4m	6.1m	610	3.4m	6.1m	610	3.4m	6.1m	8.5m	610	3.4m	6.1m	8.5m
Conc.	Top Slab	T_1	210	210	260	210	210	260	210	210	260	210	210	260	286	210	210	260	286
Conc.	Bottom Slab	T_2	165	229	279	165	235	279	165	235	279	171	235	11	311	171	235	279	311
Conc.	Sidewalls	T_3	152	152	152	152	152	152	152	152	152	152	152	165	165	178	178	191	216
Reinforcing Steel	"a"	Size Bar #	19	16	16	19	16	16	19	16	16	19	16	16	19	19	16	16	19
		Spacing	286	305	305	286	305	305	286	305	305	286	305	305	267	286	286	305	267
		Length	8.18m	8.15m	8.15m	8.18m	8.15m	8.15m	8.18m	8.15m	8.15m	8.18m	8.15m	8.20m	8.33m	8.28m	8.26m	8.31m	8.43m
	"b" or "b_1"	Size Bar #	19	19	22	19	19	22	19	19	22	19	19	22	22	19	19	22	22
		Spacing	286	305	305	286	305	305	286	305	305	286	305	305	267	286	286	305	267
		Length "b"	8.05m	8.05m	8.10m	8.05m	8.05m	8.10m	8.05m	8.05m	8.10m	8.05m	8.05m	8.15m	8.31m	8.15m	8.15m	8.26m	8.41m
		Length "b_1"	12.19m	8.03m	8.10m	12.19m	8.05m	8.10m	12.19m	8.05m	8.10m	7.95m	8.05m	8.15m	8.31m	8.05m	8.15m	8.26m	8.41m
	"c"	Size Bar #	13	19	22	13	19	22	13	19	22	13	19	22	22	13	19	22	22
		Spacing	286	305	305	286	305	305	286	305	305	286	305	305	267	286	286	305	267
		Length	5.18m	5.18m	5.18m	5.18m	5.18m	5.18m	5.18m	5.18m	5.18m	5.18m	5.18m	5.21m	5.26m	5.23m	5.23m	5.26m	5.31m
	"d" Dist Bars	Top Slab–Tot. No.	24	12	12	24	12	12	24	12	12	24	12	12	12	24	12	12	12
		Bottom Slab–Tot. No.	12	12	12	12	12	12	12	12	12	12	12	12	12	12	12	12	12
	"e" Bars	Size Bar #	13	13	13	13	13	16	13	16	19	13	19	22	22	13	19	22	22
		Spacing	457	457	305	457	305	305	457	305	305	286	305	305	267	286	286	305	267
	Spacers	Number	58			62			62			66				70			88
Quan.	Concrete: cu m per lin. ft.		1.12	1.28	1.52	1.18	1.35	1.57	1.24	1.41	1.64	1.31	1.46	1.73	1.96	1.45	1.61	1.88	2.13
Quan.	Reinf: kg per lin. ft.		118	113	137	121	117	141	121	120	145	125	126	152	186	128	134	157	200

Note

For boxes of height less than that shown in table, use next greater table height slabs, wall dimensions and reinforcing steel, and make necessary changes in bar lengths, number of spacers and quantities. Number of "d" bars in table is slab total for both cells.

This drawing is NOT in conformance with latest UBC and should be used with care and judgment.

Revision	By	Approved	Date
ORIGINAL		Kercheval	12/75
Add Metric		T. Stanton	03/03

SAN DIEGO REGIONAL STANDARD DRAWING

TRIPLE BOX CULVERT

DETAILS No. 1

RECOMMENDED BY THE SAN DIEGO REGIONAL STANDARDS COMMITTEE

Chairperson R.C.E. 19246 Date 3/10/2003

DRAWING NUMBER D-78G

IMPERIAL TABLE – SPAN 8' (all measuements in feet and/or inches).

For Metric table (2.44m Span) – see drawing D78G

SPAN			8'																
HEIGHT			4'			5'			6'			7'				8'			
STRENGTH CLASSIFICATION			A	B	C	A	B	C	A	B	C	A	B	C	D	A	B	C	D
MAX FILL OVER TOP			2	11	20	2	11	20	2	11	20	2	11	20	28	2	11	20	28
Conc.	Top Slab	T_1	8 1/4	8 1/4	10 1/4	8 1/4	8 1/4	10 1/4	8 1/4	8 1/4	10 1/4	8 1/4	8 1/4	10 1/4	11 1/2	8 1/4	8 1/4	10 1/4	11 1/2
Conc.	Bottom Slab	T_2	6 1/2	9	11	6 1/2	9 1/4	11	6 1/2	9 1/4	11	6 3/4	9 1/4	11	12 1/4	6 3/4	9 1/4	11	12 1/4
Conc.	Sidewalls	T_3	6	6	6	6	6	6	6	6	6	6	6	6 1/2	6 1/2	7	7	7 1/2	8 1/2
Reinforcing Steel	"a"	Size Bar #	6	5	5	6	5	5	6	5	5	6	5	5	6	6	5	5	6
Reinforcing Steel	"a"	Spacing	11 1/2	12	12	11 1/2	12	12	11 1/2	12	12	11 1/2	12	12	10 1/2	11 1/2	11 1/2	12	10 1/2
Reinforcing Steel	"a"	Length	26-10	26-9	26-9	26-10	26-9	26-9	26-10	26-9	26-9	26-10	26-9	26-11	27-4	27-2	27-1	27-3	27-8
Reinforcing Steel	"b" or "b_1"	Size Bar #	6	6	7	6	6	7	6	6	7	6	6	7	7	6	6	7	7
Reinforcing Steel	"b" or "b_1"	Spacing	11 1/2	12	12	11 1/2	12	12	11 1/2	12	12	11 1/2	12	12	10 1/2	11 1/2	11 1/2	12	10 1/2
Reinforcing Steel	"b" or "b_1"	Length "b"	26-5	26-5	26-7	26-5	26-5	26-7	26-5	26-5	26-7	26-5	26-5	26-9	27-3	26-9	26-9	27-1	27-7
Reinforcing Steel	"b" or "b_1"	Length "b_1"	26-0	26-4	26-7	26-0	26-5	26-7	26-0	26-5	26-7	26-1	26-5	26-9	27-3	26-5	26-9	27-1	27-7
Reinforcing Steel	"c"	Size Bar #	4	6	7	4	6	7	4	6	7	4	6	7	7	4	6	7	7
Reinforcing Steel	"c"	Spacing	11 1/2	12	12	11 1/2	12	12	11 1/2	12	12	11 1/2	12	12	10 1/2	11 1/2	11 1/2	12	10 1/2
Reinforcing Steel	"c"	Length	17-0	17-0	17-0	17-0	17-0	17-0	17-0	17-0	17-0	17-0	17-0	17-1	17-3	17-2	17-2	17-3	17-5
Reinforcing Steel	"d" Dist Bars	Top Slab–Tot. No.	24	12	12	24	12	12	24	12	12	24	12	12	12	24	12	12	12
Reinforcing Steel	"d" Dist Bars	Bottom Slab–Tot. No.	12	12	12	12	12	12	12	12	12	12	12	12	12	12	12	12	12
Reinforcing Steel	"e" Bars	Size Bar #	4	4	4	4	4	5	4	5	6	4	6	7	7	4	6	7	7
Reinforcing Steel	"e" Bars	Spacing	18	18	12	18	12	12	18	12	12	11 1/2	12	12	10 1/2	11 1/2	11 1/2	12	10 1/2
Reinforcing Steel	Spacers	Number	58			62			62			66				70			88
Quan.	Concrete: C.Y. per lin. ft.		1.47	1.67	1.99	1.54	1.76	2.06	1.62	1.84	2.14	1.71	1.91	2.26	2.57	1.90	2.10	2.46	2.79
Quan.	Reinf :lbs per lin. ft.		261	250	301	266	257	310	267	264	320	276	277	336	409	283	295	347	441

Note

For boxes of height less than that shown in table, use next greater table height slabs, wall dimensions and reinforcing steel, and make necessary changes in bar lengths, number of spacers and quantities. Number of "d" bars in table is slab total for both cells.

This drawing is NOT in conformance with latest UBC and should be used with care and judgment.

Revision	By	Approved	Date
ORIGINAL		Kercheval	12/75
Add Metric	T. Stanton		03/03

SAN DIEGO REGIONAL STANDARD DRAWING

TRIPLE BOX CULVERT

DETAILS No. 1

RECOMMENDED BY THE SAN DIEGO REGIONAL STANDARDS COMMITTEE

Chairperson R.C.E. 19246 Date 3/10/2003

DRAWING NUMBER D-78H

METRIC TABLE - SPAN 3.05m (all measuements in millimeters unless otherwise noted).

For Imperial table (10' Span) - see drawing D78BJ

SPAN			3.05m																
HEIGHT			1.52m			1.83m			2.13m			2.44m				3.05m			
STRENGTH CLASSIFICATION			A	B	C	A	B	C	A	B	C	A	B	C	D	A	B	C	D
MAX FILL OVER TOP			610	3.4m	6.1m	610	3.4m	6.1m	610	3.4m	6.1m	610	3.4m	6.1m	28	610	3.4m	6.1m	28
Conc.	Top Slab	T_1	229	254	305	229	254	305	229	254	305	229	254	305	362	229	260	318	368
Conc.	Bottom Slab	T_2	191	273	330	191	273	13	191	273	330	197	279	330	381	203	279	343	381
Conc.	Sidewalls	T_3	152	152	152	152	152	152	152	152	165	178	178	191	216	203	216	229	254
Reinforcing Steel	"a"	Size Bar #	19	19	19	19	19	19	19	19	19	19	19	19	22	19	19	19	22
		Spacing	267	330	254	254 1/2	330	254	267	330	254	267	330	254	279	267	330	254	279
		Length	10.01m	10.01m	10.01m	10.01m	10.01m	10.01m	10.01m	10.01m	10.01m	10.11m	10.11m	10.16m	10.26m	10.21m	10.26m	10.31m0	10.41m
	"b" or "b_1"	Size Bar #	19	22	22	19	22	22	19	22	22	19	22	22	25	19	22	22	25
		Spacing	267	330	254	254 1/2	330	254	267	330	254	267	330	254	279	267	330	254	279
		Length "b"	9.91m	9.93m	10.01m	9.91m	9.93m	10.01m	9.91m	9.93m	10.06m	10.01m	10.03m	10.16m	10.31m	9.80m	10.19m	10.31m	10.49m
		Length "b_1"	9.80m	9.93m	10.03m	9.80m	9.93m	10.03m	9.80m	9.93m	10.31m	9.91m	10.03m	10.19m	10.31m	10.03m	10.19m	10.31m	10.49m
	"c"	Size Bar #	16	22	22	16	22	22	16	22	22	16	22	22	25	16	22	22	25
		Spacing	267	330	254	267	330	254	267	13	254	267	330	254	279	267	330	254	279
		Length	6.40m	6.40m	6.40m	6.40m	6.40m	6.40m	6.40m	6.40m	6.43m	6.45m	6.45m	6.48m	6.53m	6.50m	6.53m	6.55m	6.60m
	"d" Dist Bars	Top Slab-Tot. No.	27	15	15	27	15	15	27	15	15	27	15	15	15	27	15	15	15
		Bottom Slab-Tot. No.	15	15	15	15	15	15	15	15	15	15	15	15	15	15	15	15	15
	"e" Bars	Size Bar #	13	13	16	13	16	19	13	19	22	13	19	22	25	16	19	25	25
		Spacing	457	330	254	457	330	254	330	330	254	267	305	10	279	267	229	254	229
	Spacers	Number	68			68			72			76			94	102			
Quan.	Concrete: cu m per lin. ft.		1.51	1.83	2.16	1.57	1.90	2.22	1.63	1.95	2.32	1.79	2.12	2.47	2.90	2.05	2.43	2.85	3.23
Quan.	Reinf kg per lin. ft.		162	169	213	163	172	219	166	177	228	171	182	233	268	191	205	262	287

Note

For boxes of height less than that shown in table, use next greater table height slabs, wall dimensions and reinforcing steel, and make necessary changes in bar lengths, number of spacers and quantities. Number of "d" bars in table is slab total for both cells.

This drawing is NOT in conformance with latest UBC and should be used with care and judgment.

Revision	By	Approved	Date
ORIGINAL		Kercheval	12/75
Add Metric		T. Stanton	03/03

SAN DIEGO REGIONAL STANDARD DRAWING

TRIPLE BOX CULVERT

DETAILS No. 1

RECOMMENDED BY THE SAN DIEGO REGIONAL STANDARDS COMMITTEE

Chairperson R.C.E. 19246 Date 3/10/2003

DRAWING NUMBER D-781

IMPERIAL TABLE - SPAN 10' (all measuements in feet and/or inches).

For Metric table (3.05m Span) - see drawing D78I

SPAN			10'																
HEIGHT			5'			6'			7'			8'				10'			
STRENGTH CLASSIFICATION			A	B	C	A	B	C	A	B	C	A	B	C	D	A	B	C	D
MAX FILL OVER TOP			2	11	20	2	11	20	2	11	20	2	11	20	28	2	11	20	28
Conc.	Top Slab	T_1	9	10	12	9	10	12	9	10	12	9	10	12	14 1/4	9	10 1/4	12 1/2	14 1/2
Conc.	Bottom Slab	T_2	7 1/2	10 3/4	13	7 1/2	10 3/4	13	7 1/2	10 3/4	13	7 3/4	11	13	15	8	11	13 1/2	15
Conc.	Sidewalls	T_3	6	6	6	6	6	6	6	6	6 1/2	7	7	7 1/2	8 1/2	8	8 1/2	9	10
Reinforcing Steel	"a"	Size Bar #	6	6	6	6	6	6	6	6	6	6	6	6	7	6	6	6	7
		Spacing	10 1/2	13	10	10 1/2	13	10	10 1/2	13	10	10 1/2	13	10	11	10 1/2	13	10	11
		Length	32-10	32-10	32-10	32-10	32-10	32-10	32-10	32-10	32-10	33-2	33-2	33-4	33-8	33-6	33-8	33-10	34-2
	"b" or "b_1"	Size Bar #	6	7	7	6	7	7	6	7	7	6	7	7	8	6	7	7	8
		Spacing	10 1/2	13	10	10 1/2	13	10	10 1/2	13	10	10 1/2	13	10	11	10 1/2	13	10	11
		Length "b"	32-6	32-7	32-10	32-6	32-7	32-10	32-6	32-7	33-0	32-10	32-11	33-4	33-11	32-2	33-5	33-11	34-5
		Length "b_1"	32-2	32-7	32-11	32-2	32-7	32-11	32-2	32-7	33-1	32-6	32-11	33-5	33-11	32-11	33-5	33-11	34-5
	"c"	Size Bar #	5	7	7	5	7	7	5	7	7	5	7	7	8	5	7	7	8
		Spacing	10 1/2	13	10	10 1/2	13	10	10 1/2	13	10	10 1/2	13	10	11	10 1/2	13	10	11
		Length	21-0	21-0	21-0	21-0	21-0	21-0	21-0	21-0	21-1	21-2	21-2	21-3	21-5	21-4	21-5	21-6	21-8
	"d" Dist Bars	Top Slab-Tot. No.	27	15	15	27	15	15	27	15	15	27	15	15	15	27	15	15	15
		Bottom Slab-Tot. No.	15	15	15	15	15	15	15	15	15	15	15	15	15	15	15	15	15
	"e" Bars	Size Bar #	4	4	5	4	5	6	4	6	7	4	6	7	8	5	6	8	8
		Spacing	18	13	10	18	13	10	13	13	10	10 1/2	12	10	11	10 1/2	9	10	9
	Spacers	Number	68			68			72			76			94	102			
Quan.	Concrete: C.Y. per lin. ft.		1.98	2.40	2.82	2.06	2.48	2.90	2.13	2.55	3.03	2.34	2.77	3.23	3.78	2.68	3.18	3.73	4.22
Quan.	Reinf :lbs per lin. ft.		358	372	470	359	379	482	367	391	502	377	402	514	590	421	453	577	632

Note

For boxes of height less than that shown in table, use next greater table height slabs, wall dimensions and reinforcing steel, and make necessary changes in bar lengths, number of spacers and quantities. Number of "d" bars in table is slab total for both cells.

This drawing is NOT in conformance with latest UBC and should be used with care and judgment.

Revision	By	Approved	Date
ORIGINAL		Kercheval	12/75
Add Metric		T. Stanton	03/03

SAN DIEGO REGIONAL STANDARD DRAWING

TRIPLE BOX CULVERT

DETAILS No. 1

RECOMMENDED BY THE SAN DIEGO REGIONAL STANDARDS COMMITTEE

Chairperson R.C.E. 19246 Date 3/01/2003

DRAWING NUMBER D-78J

METRIC TABLE – SPAN 3.66m (all measuements in millimeters unless otherwise noted).

For Imperial table (12' Span) – see drawing D78BJ

SPAN			3.66m																			
HEIGHT			1.83m			2.13m			2.44m			2.74m				3.05m				3.66m			
STRENGTH CLASSIFICATION			A	B	C	A	B	C	A	B	C	A	B	C	D	A	B	C	D	A	B	C	D
MAX FILL OVER TOP			610	3m	5.5m	610	3m	5.5m	610	3m	5.5m	2	3.4m	20	9.1m	610	3.4m	20	9.1m	610	3.4m	20	9.1m
Conc.	Top Slab	T_1	260	286	356	260	286	356	260	286	356	260	305	375	451	260	305	375	451	260	305	375	451
Conc.	Bottom Slab	T_2	210	305	368	216	305	375	216	305	375	222	318	394	464	222	318	394	464	229	324	400	464
Conc.	Sidewalls	T_3	152	152	165	152	152	178	178	178	191	203	203	229	254	203	203	229	267	229	229	267	305
Reinforcing Steel	"a"	Size Bar #	22	19	22	22	19	22	22	19	22	22	19	22	25	22	19	22	25	22	19	22	25
		Spacing	305	11	286	305	279	286	305	279	286	305	267	279	286	305	267	279	286	305	267	279	286
		Length	11.91m	11.84m	11.96m	11.91m	11.84m	12.01m	12.01m	11.94m	12.07m	12.12m	12.04m	12.22m	12.45m	12.12m	12.04m	12.22m	12.50m	12.22m	11.91m	12.37m	12.65m
	"b" or "b_1"	Size Bar #	22	22	25	22	22	25	22	22	25	22	22	25	29	22	22	25	29	22	22	25	29
		Spacing	305	279	286	305	279	286	305	279	286	305	267	279	286	305	267	279	286	305	267	279	286
		Length "b"	11.76m	11.81m	11.96m	11.76m	11.81m	12.01m	11.86m	11.91m	12.07m	11.96m	12.04m	12.24m	12.45m	11.96m	12.04m	12.24m	12.50m	12.07m	11.91m	12.40m	12.65m
		Length "b_1"	11.66m	11.76m	11.94m	11.66m	11.81m	12.01m	11.76m	11.91m	12.07m	11.89m	12.04m	12.24m	12.45m	11.89m	12.04m	12.24m	12.50m	11.99m	11.91m	12.42m	12.65m
	"c"	Size Bar #	19	22	25	19	22	25	19	22	25	19	22	25	29	19	22	25	29	19	22	25	29
		Spacing	305	279	286	305	279	286	305	279	286	305	267	279	286	305	267	279	286	305	267	279	286
		Length	7.62m	7.62m	7.65m	7.62m	7.62m	7.67m	7.67m	7.67m	7.70m	7.72m	7.72m	7.77m	7.82m	7.72m	7.72m	7.77m	7.85m	7.77m	7.77m	7.85m	7.92m
	"d" Dist Bars	Top Slab–Tot. No.	36	15	15	36	15	15	36	15	15	36	15	15	15	36	15	15	15	36	15	15	15
		Bottom Slab–Tot. No.	15	15	15	15	15	15	15	15	15	15	15	15	15	15	15	15	15	15	15	15	15
	"e" Bars	Size Bar #	13	13	19	13	13	19	13	13	19	13	19	22	25	16	22	25	25	19	22	29	29
		Spacing	457	178	286	305	146	286	305	140	229	254	267	279	286	305	267	279	165	305	229	279	229
	Spacers	Number	76			80			84			104				110				116			
Quan.	Concrete: cu m per lin. ft.		1.99	2.43	2.92	2.06	2.49	3.04	2.20	2.64	3.16	2.39	2.90	3.52	4.17	2.47	2.97	3.61	4.32	2.77	3.27	4.01	4.72
Quan.	Reinf kg per lin. ft.		222	229	285	225	234	289	229	239	297	243	264	326	396	249	275	338	426	261	288	360	440

Note

For boxes of height less than that shown in table, use next greater table height slabs, wall dimensions and reinforcing steel, and make necessary changes in bar lengths, number of spacers and quantities. Number of "d" bars in table is slab total for both cells.

This drawing is NOT in conformance with latest UBC and should be used with care and judgment.

Revision	By	Approved	Date
ORIGINAL		Kercheval	12/75
Add Metric		T. Stanton	03/03

SAN DIEGO REGIONAL STANDARD DRAWING

TRIPLE BOX CULVERT

DETAILS No. 1

RECOMMENDED BY THE SAN DIEGO REGIONAL STANDARDS COMMITTEE

Chairperson R.C.E. 19246 Date 3/10/2003

DRAWING NUMBER D-78K

IMPERIAL TABLE – SPAN 12' (all measuements in feet and/or inches).

For Metric table (3.66m Span) – see drawing D78I

SPAN			12'																				
HEIGHT			6'			7'			8'			9'				10'				12'			
STRENGTH CLASSIFICATION			A	B	C	A	B	C	A	B	C	A	B	C	D	A	B	C	D	A	B	C	D
MAX FILL OVER TOP			2	10	18	2	10	18	2	10	18	2	11	20	30	2	11	20	30	2	11	20	30
Conc.	Top Slab	T_1	10 1/4	11 1/2	14	10 1/4	11 1/2	14	10 1/4	11 1/2	14	10 1/4	12	14 3/4	17 3/4	10 1/4	12	14 3/4	17 3/4	10 1/4	12	14 3/4	17 3/4
Conc.	Bottom Slab	T_2	8 1/4	12	14 1/2	8 1/2	12	14 3/4	8 1/2	12	14 3/4	8 3/4	12 1/2	15 1/2	18 1/4	8 3/4	12 1/2	15 1/2	18 1/4	9	12 3/4	15 3/4	18 1/4
Conc.	Sidewalls	T_3	6	6	6 1/2	6	6	7	7	7	7 1/2	8	8	9	10	8	8	9	10 1/2	9	9	10 1/2	12
Reinforcing Steel	"a"	Size Bar #	7	6	7	7	6	7	7	6	7	7	6	7	8	7	6	7	8	7	6	7	8
		Spacing	12	11	11 1/2	12	11	11 1/2	12	11	11 1/2	12	10 1/2	11	11 1/2	12	10 1/2	11	11 1/2	12	10 1/2	11	11 1/2
		Length	39-1	38-10	39-3	39-1	38-10	39-5	39-5	39-2	39-7	39-9	39-6	40-1	40-10	39-9	39-6	40-1	41-0	40-1	39-10	40-7	41-6
	"b" or "b_1"	Size Bar #	7	7	8	7	7	8	7	7	8	7	7	8	9	7	7	8	9	7	7	8	9
		Spacing	12	11	11 1/2	12	11	11 1/2	12	11	11 1/2	12	10 1/2	11	11 1/2	12	10 1/2	11	11 1/2	12	10 1/2	11	11 1/2
		Length "b"	38-7	38-9	39-3	38-7	38-9	39-5	38-11	39-1	39-7	39-3	39-6	40-2	40-10	39-3	39-6	40-2	41-0	39-7	39-10	40-8	41-6
		Length "b_1"	38-3	38-7	39-2	38-3	38-9	39-5	38-7	39-1	39-7	39-0	39-6	40-2	40-10	39-0	39-6	40-2	41-0	39-4	39-10	40-9	41-6
	"c"	Size Bar #	6	7	8	6	7	8	6	7	8	6	7	8	9	6	7	8	9	6	7	8	9
		Spacing	12	11	11 1/2	12	11	11 1/2	12	11	11 1/2	12	10 1/2	11	11 1/2	12	10 1/2	11	11 1/2	12	10 1/2	11	11 1/2
		Length	25-0	25-0	25-1	25-0	25-0	25-2	25-2	25-2	25-3	25-4	25-4	25-6	25-8	25-4	25-4	25-6	25-9	25-6	25-6	25-9	26-0
	"d" Dist Bars	Top Slab-Tot. No.	36	15	15	36	15	15	36	15	15	36	15	15	15	36	15	15	15	36	15	15	15
		Bottom Slab-Tot. No.	15	15	15	15	15	15	15	15	15	15	15	15	15	15	15	15	15	15	15	15	15
	"e" Bars	Size Bar #	4	4	6	4	4	6	4	4	6	4	6	7	8	5	7	8	8	6	7	9	9
		Spacing	18	7	11 1/2	12	5 3/4	11 1/2	12	5 1/2	9	10	10 1/2	11	11 1/2	12	10 1/2	11	6 1/2	12	9	11	9
	Spacers	Number	76			80			84			104				110				116			
Quan.	Concrete: C.Y. per lin. ft.		2.60	3.18	3.82	2.70	3.26	3.98	2.88	3.45	4.13	3.13	3.79	4.61	5.45	3.23	3.89	4.72	5.65	3.62	4.28	5.24	6.18
Quan.	Reinf :lbs per lin. ft.		489	505	628	497	516	637	505	527	654	536	582	719	872	548	606	745	939	575	636	793	963

Note

For boxes of height less than that shown in table, use next greater table height slabs, wall dimensions and reinforcing steel, and make necessary changes in bar lengths, number of spacers and quantities. Number of "d" bars in table is slab total for both cells.

This drawing is NOT in conformance with latest UBC and should be used with care and judgment.

Revision	By	Approved	Date
ORIGINAL		Kercheval	12/75
Add Metric		T. Stanton	03/03

SAN DIEGO REGIONAL STANDARD DRAWING

TRIPLE BOX CULVERT

DETAILS No. 1

RECOMMENDED BY THE SAN DIEGO REGIONAL STANDARDS COMMITTEE

Chairperson R.C.E. 19246 Date 3/01/2003

DRAWING NUMBER D-78L

This drawing is NOT in conformance with latest UBC and should be used with care and judgment.

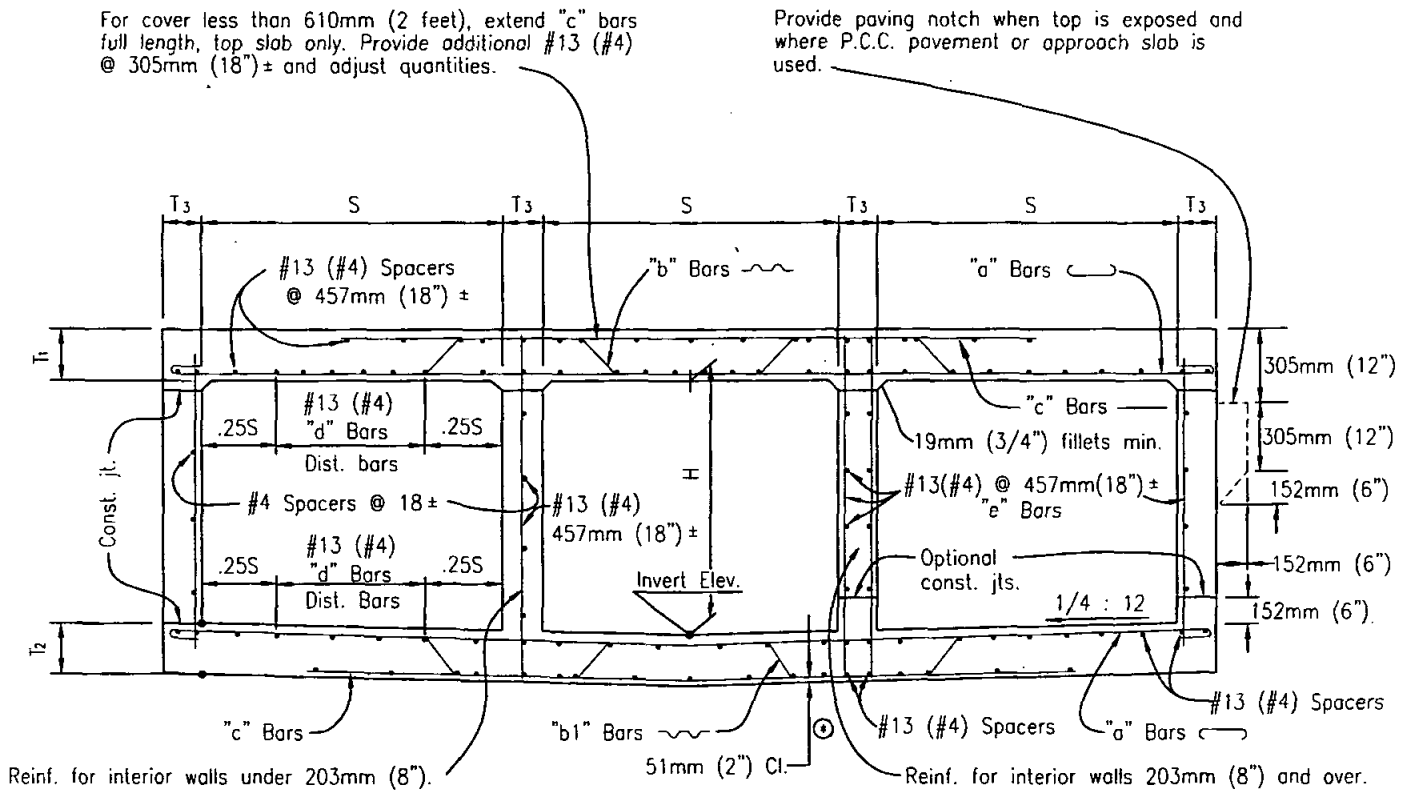

TYPICAL SECTION

⊕ For reinforcement clearance, except at bottom, see "Miscellaneous Details."

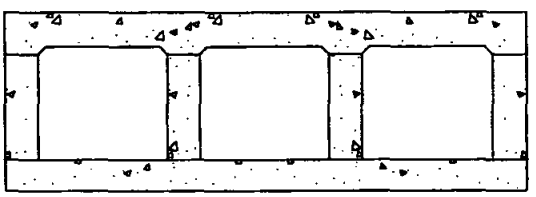

"FLAT INVERT" ALTERNATIVE

(When shown)

Revision	By	Approved	Date
ORIGINAL		Kercheval	12/75
Add Metric		T. Stanton	03/03

SAN DIEGO REGIONAL STANDARD DRAWING

TRIPLE BOX CULVERT DETAILS NO.2

RECOMMENDED BY THE SAN DIEGO REGIONAL STANDARDS COMMITTEE

T. Stanton 3/10/2003

Chairperson R.C.E. 19246 Date

DRAWING NUMBER D-78M

This drawing is NOT in conformance with latest UBC and should be used with care and judgment.

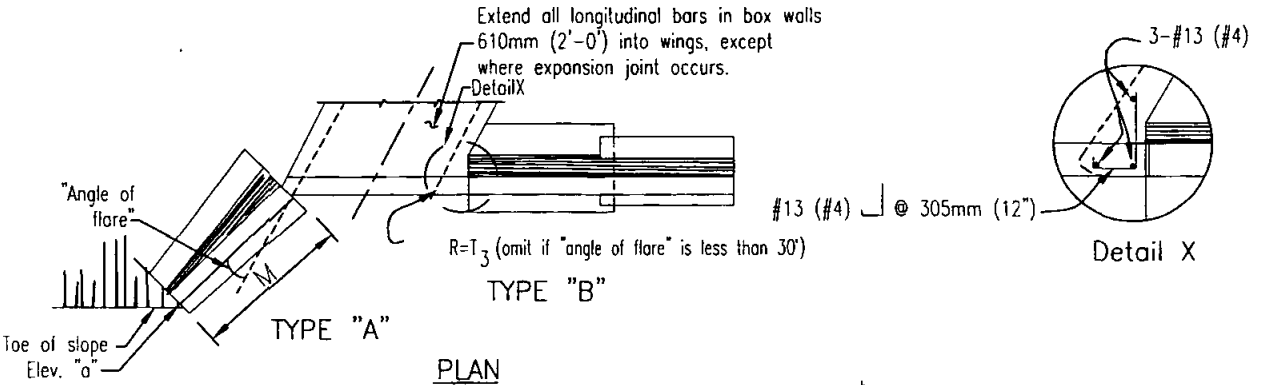

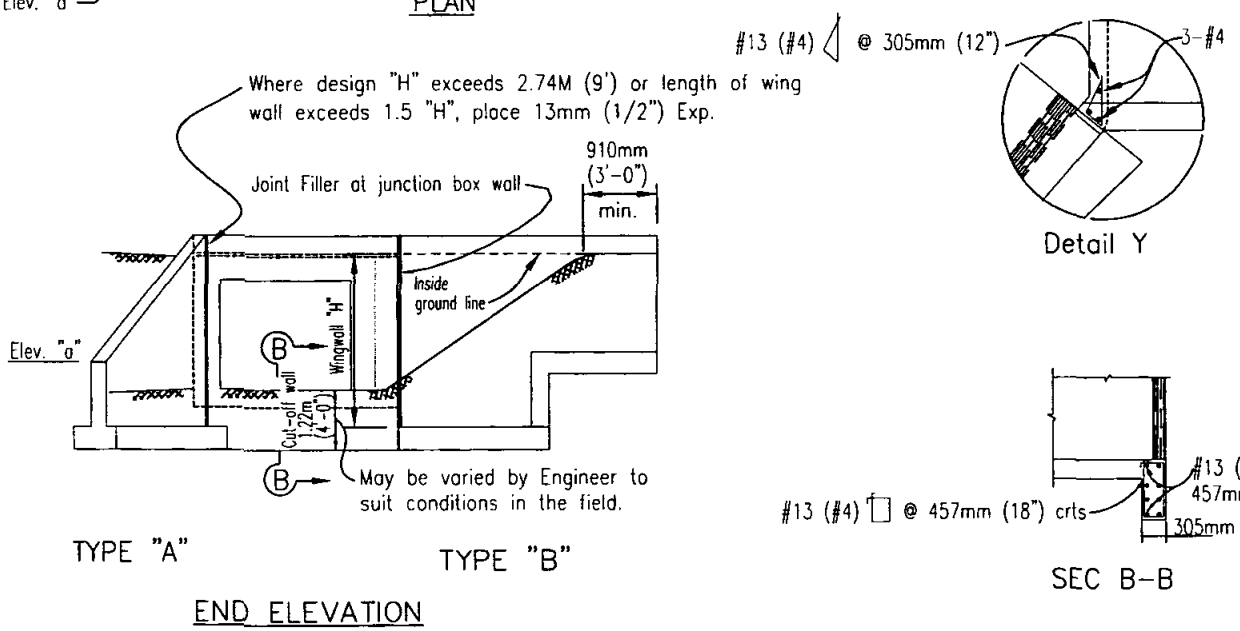

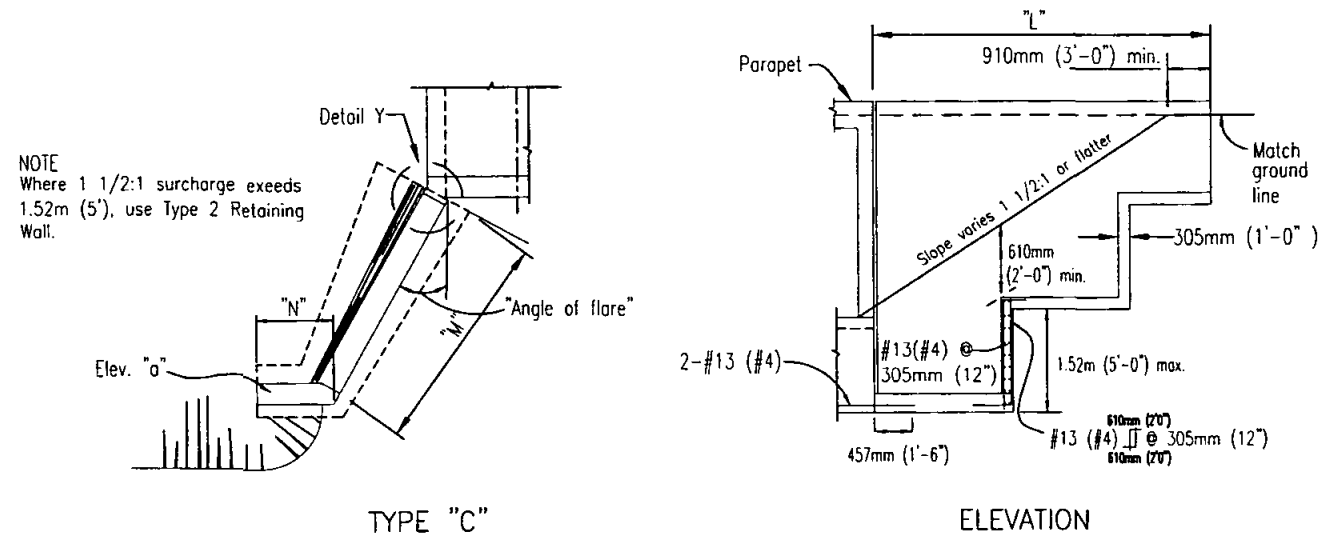

Revision	By	Approved	Date
ORIGINAL		Kercheval	12/75
Add Metric		T. Stanton	03/03

SAN DIEGO REGIONAL STANDARD DRAWING

BOX CULVERT WINGWALL
TYPES A, B & C
DETAILS NO. 1

RECOMMENDED BY THE SAN DIEGO REGIONAL STANDARDS COMMITTEE

T. Stanton 3/10/2003

Chairperson R.C.E. 19246 Date

DRAWING NUMBER D-79A

This drawing is NOT in conformance with latest UBC and should be used with care and judgment.

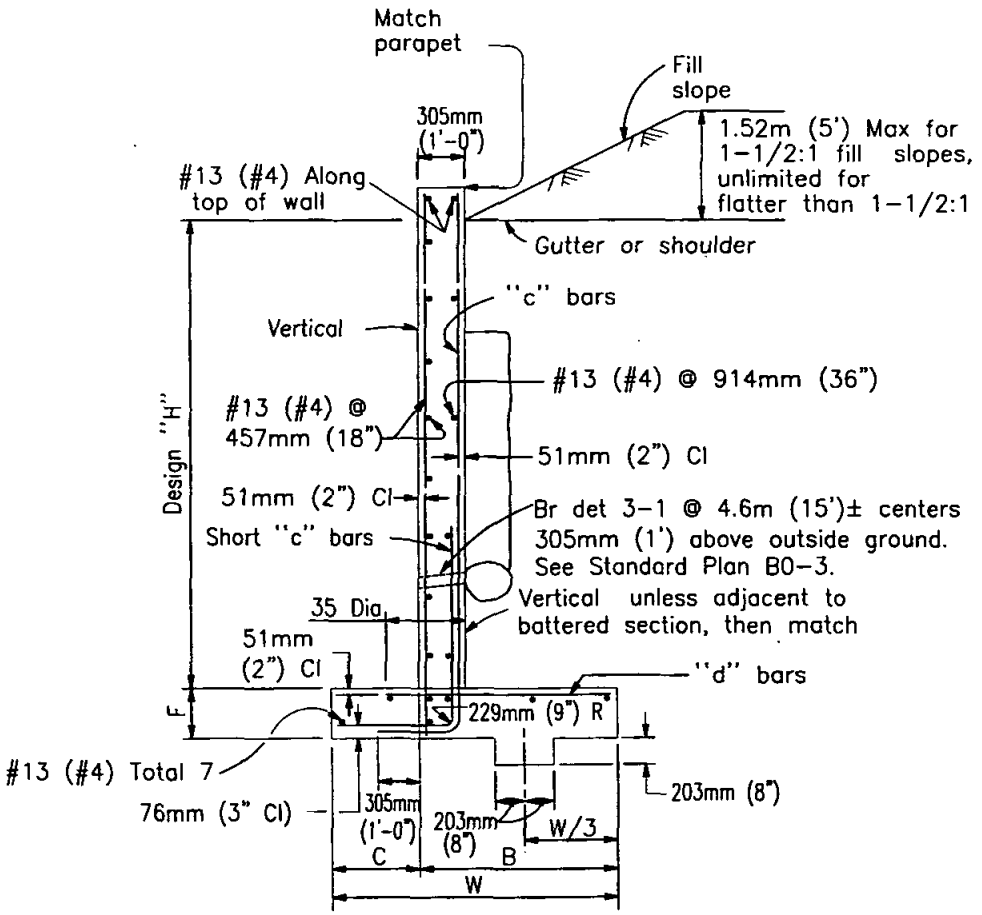

TYPICAL SECTION

H=1.22m (4') Thru 3.66m (12')

Revision	By	Approved	Date
ORIGINAL		Kercheval	12/75
Add Metric		T. Stanton	03/03

SAN DIEGO REGIONAL STANDARD DRAWING

BOX CULVERT WINGWALL
TYPES A, B & C
DETAILS NO. 2

RECOMMENDED BY THE SAN DIEGO REGIONAL STANDARDS COMMITTEE

T. Stanton 3/10/2003

Chairperson R.C.E. 19246 Date

DRAWING NUMBER D-79B

This drawing is NOT in conformance with latest UBC and should be used with care and judgment.

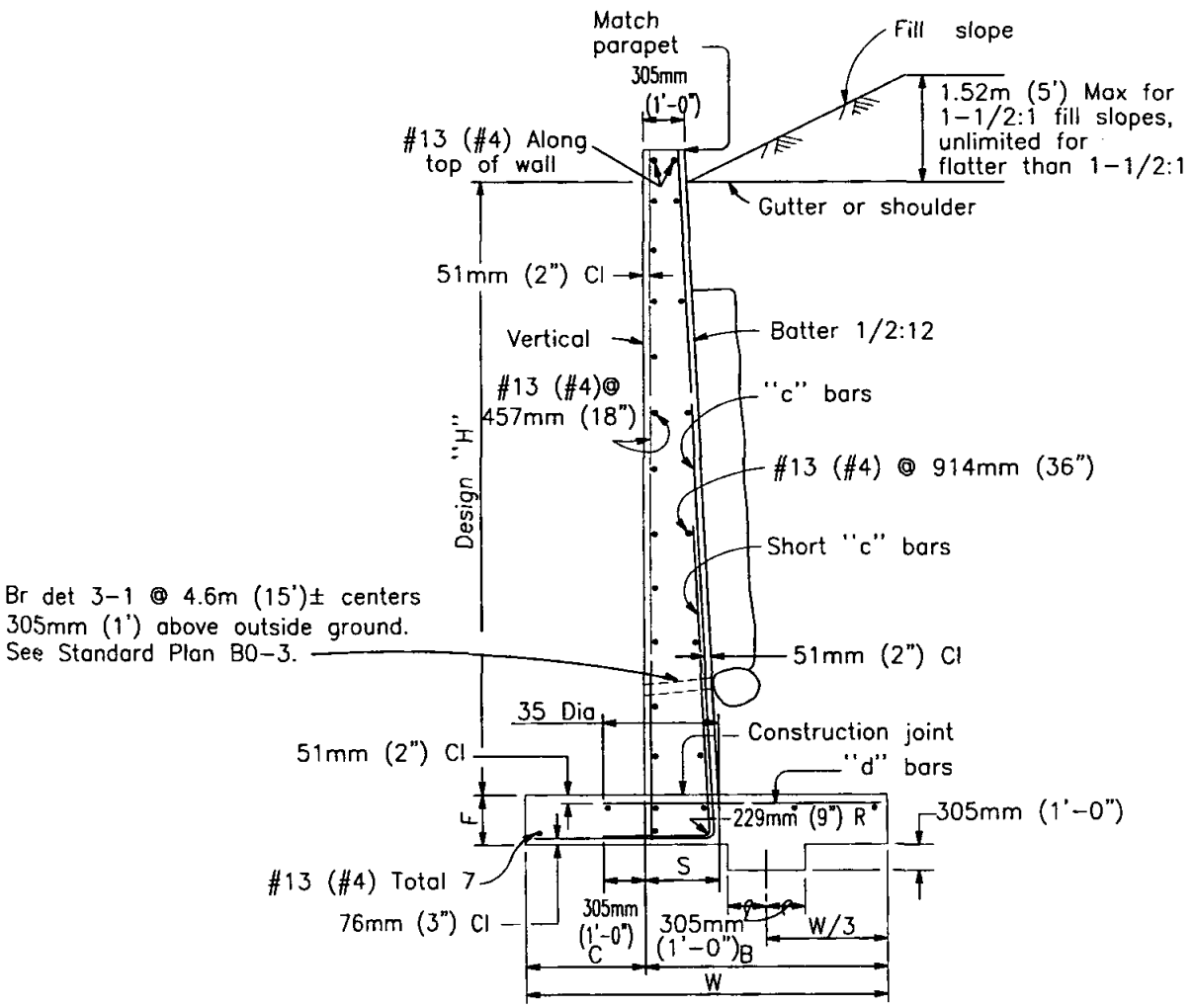

TYPICAL SECTION

H=4.0m (13') Thru 4.9m (16')

Revision	By	Approved	Date
ORIGINAL		Kercheval	12/75
Add Metric		T. Stanton	03/03

SAN DIEGO REGIONAL STANDARD DRAWING

BOX CULVERT WINGWALL
TYPES A, B & C
DETAILS NO. 2

RECOMMENDED BY THE SAN DIEGO REGIONAL STANDARDS COMMITTEE

T. Stanton 3/10/2003

Chairperson R.C.E. 19246 Date

DRAWING NUMBER D-79C

This drawing is NOT in conformance with latest UBC and should be used with care and judgment.

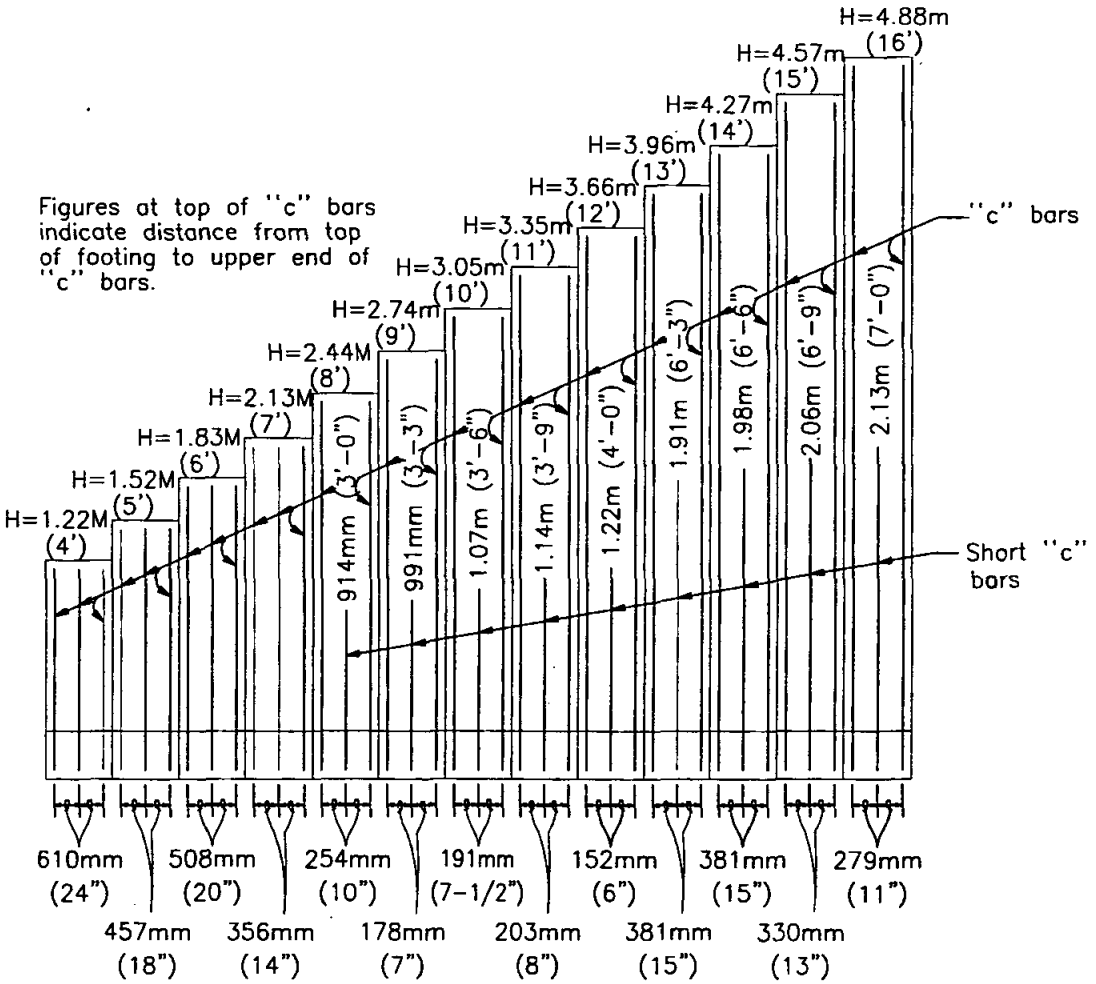

TYPICAL LAYOUT EXAMPLE 1

Revision	By	Approved	Date
ORIGINAL		Kercheval	12/75
Add Metric		T. Stanton	03/03

SAN DIEGO REGIONAL STANDARD DRAWING

BOX CULVERT WINGWALL
TYPES A, B & C
DETAILS NO. 2

RECOMMENDED BY THE SAN DIEGO REGIONAL STANDARDS COMMITTEE

T. Stanton 3/10/2003

Chairperson R.C.E. 19246 Date

DRAWING NUMBER D-79D

This drawing is NOT in conformance with latest UBC and should be used with care and judgment.

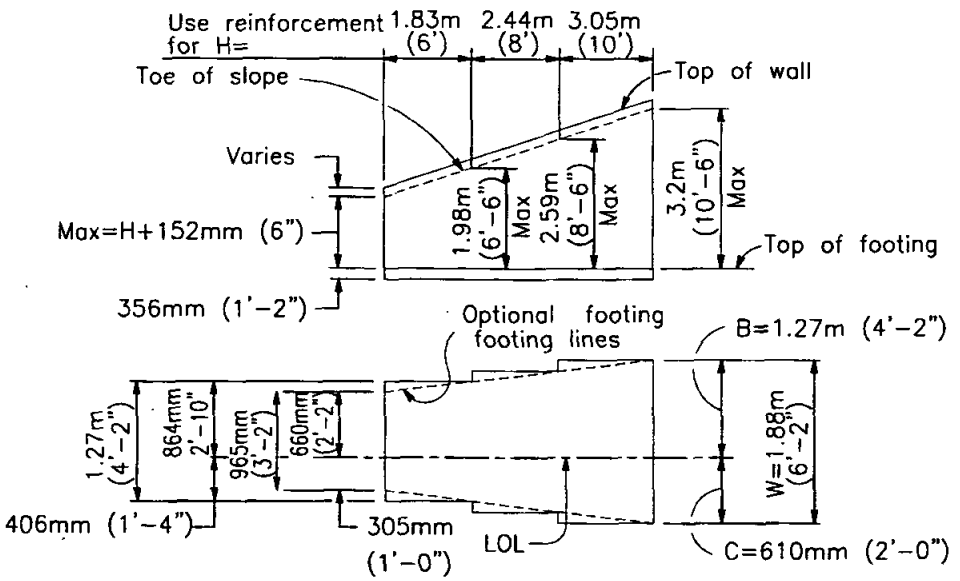

TYPICAL LAYOUT EXAMPLE 2

NOTES

- Unit Stresses: f_s=138 Mpa (20,000 psi), f_c=8.3Mpa (1,200 psi), n=10
  Maximum Toe Pressure = 144Kpa (1-1/2 Tons/sq. ft).

Elevations, length and angle of flare of wings may be varied by the Engineer to suit conditions encountered in the field.

Walls designed for 610mm (2') liveload surcharge, 1-1/2:1 sloping surcharge not to exceed 1.52m (5') in elevation plus 610mm (2') liveload surcharge, or unlimited 2:1 surcharge. Dimensions "H","L","M","N", Elevation "a" and "Angle of flare" (as apply) are shown on the plans.

Wall height may be exceeded by 152mm (6") before going to next greater "H". Eliminate cutoff wall if adjacent channel is paved and skew is 20° maximum.

Revision	By	Approved	Date
ORIGINAL		Kercheval	12/75
Add Metric		T. Stanton	03/03

SAN DIEGO REGIONAL STANDARD DRAWING

BOX CULVERT WINGWALL
TYPES A, B & C
DETAILS NO. 2

RECOMMENDED BY THE SAN DIEGO REGIONAL STANDARDS COMMITTEE

T. Stanton 3/10/2003

Chairperson R.C.E. 19246 Date

DRAWING NUMBER D-79E

REINFORCED CONCRETE WINGWALLS – METRIC

"H"	1.22m	1.52m	1.83m	2.13m	2.44m	2.74m	3.05m	3.35m	3.66m	3.96m	4.27m	4.57m	4.88m
W	965mm	1.12m	1.27m	1.42m	1.57m	1.73m	1.88m	2.03m	2.18m	2.34m	2.49m	2.64m	2.79m
C	305mm	356mm	406mm	457mm	508mm	559mm	610mm	660mm	711mm	762mm	813mm	864mm	914mm
B	660mm	762mm	864mm	965mm	1.07m	1.17m	1.27m	1.37m	1.47m	1.57m	1.68m	1.78m	1.88m
F	1'-2"												
Batter	None									1/2 : 12			
S	305mm	305mm	305mm	305mm	305mm	305mm	305mm	305mm	305mm	1'-6 ½"	1'-7"	1'-7 ½"	1'-8"
"c" Bars (mm)	#13@254	#13@457	#16@508	#16@356	#16@254	#16@178	#19@191	#22@203	#22@152	#29@381	#32@381	#32@330	#32@279
"d" Bars (mm)	#13@254	#13@457	#16@508	#16@356	#16@254	#19@356	#22@381	#25@16	#22@305	#25@381	#29@381	#32@330	#29@279
Conc cu m/lf	0.25	0.30	0.34	0.38	0.43	0.47	0.52	0.56	0.61	0.78	0.85	0.91	0.97
Reinf #/lf	13	16	19	25	30	37	49	62	76	73	90	104	125

Quantities do not include that portion above the design "H" limit.

REINFORCED CONCRETE WINGWALLS – IMPERIAL

"H"	4'	5'	6'	7'	8'	9'	10'	11'	12'	13'	14'	15'	16'
W	3'-2"	3'-8"	4'-2"	4'-8"	5'-2"	5'-8"	6'-2"	6'-8"	7'-2"	7'-8"	8'-2"	8'-8"	9'-2"
C	1'-0"	1'-2"	1'-4"	1'-6"	1'-8"	1'-10"	2'-0"	2'-2"	2'-4"	2'-6"	2'-8"	2'-10"	3'-0"
B	2'-2"	2'-6"	2'-10"	3'-2"	3'-6"	3'-10"	4'-2"	4'-6"	4'-10"	5'-2"	5'-6"	5'-10"	6'-2"
F	1'-2"												
Batter	None									1/2 : 12			
S	1'-0"	1'-0"	1'-0"	1'-0"	1'-0"	1'-0"	1'-0"	1'-0"	1'-0"	1'-6 ½"	1'-7"	1'-7 ½"	1'-8"
"c" Bars	#4@24	#4@18	#5@20	#5@14	#5@10	#5@7	#6@7½	#7@8	#7@6	#9@15	#10@15	#10@13	#10@11
"d" Bars	#4@24	#4@18	#5@20	#5@14	#5@10	#6@14	#7@15	#8@16	#7@12	#8@15	#9@15	#10@13	#9@11
Conc cy/lf	0.32	0.38	0.44	0.49	0.55	0.61	0.67	0.73	0.79	1.02	1.10	1.18	1.26
Reinf #/lf	13	16	19	25	30	37	49	62	76	73	90	104	125

Quantities do not include that portion above the design "H" limit.

This drawing is NOT in conformance with latest UBC and should be used with care and judgment.

Revision	By	Approved	Date
ORIGINAL		Kercheval	12/75
Add Metric		T. Stanton	03/03

SAN DIEGO REGIONAL STANDARD DRAWING

BOX CULVERT WINGWALL
TYPES A, B & C
DETAILS NO. 2

RECOMMENDED BY THE SAN DIEGO REGIONAL STANDARDS COMMITTEE

Chairperson R.C.E. 19246 Date 3/01/2003

DRAWING NUMBER D-79F

This drawing is NOT in conformance with latest UBC and should be used with care and judgment.

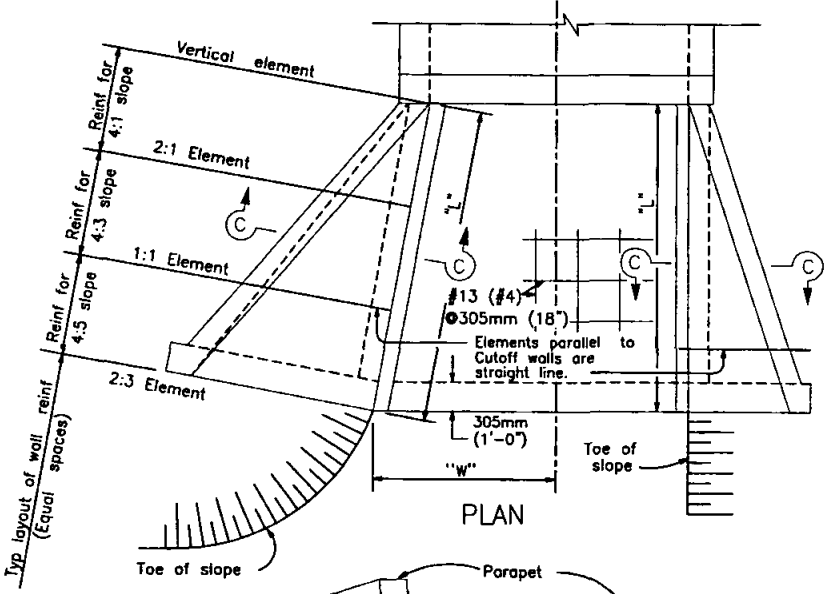

PLAN

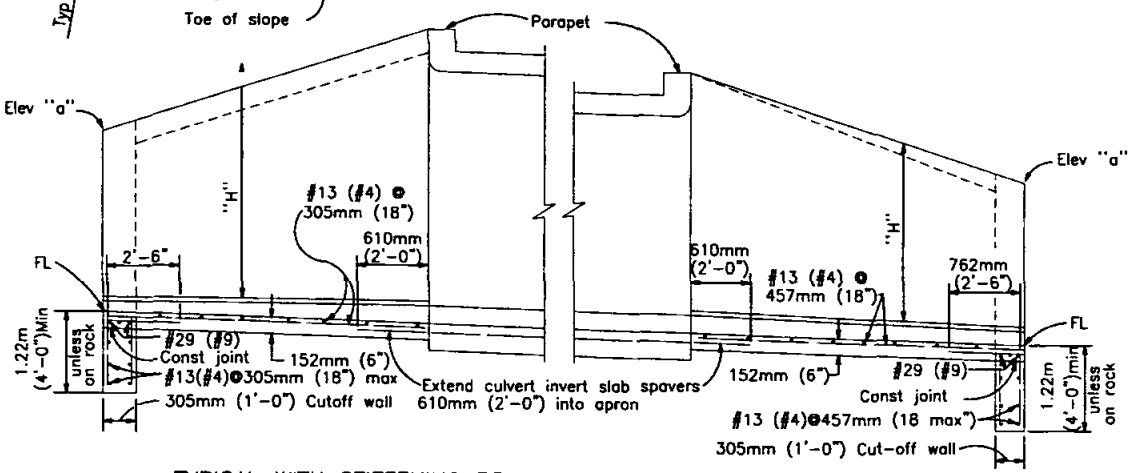

TYPICAL WITH STIFFENING BEAM TYPICAL WITHOUT STIFFENING BEAM

PART LONGITUDAL SECTION

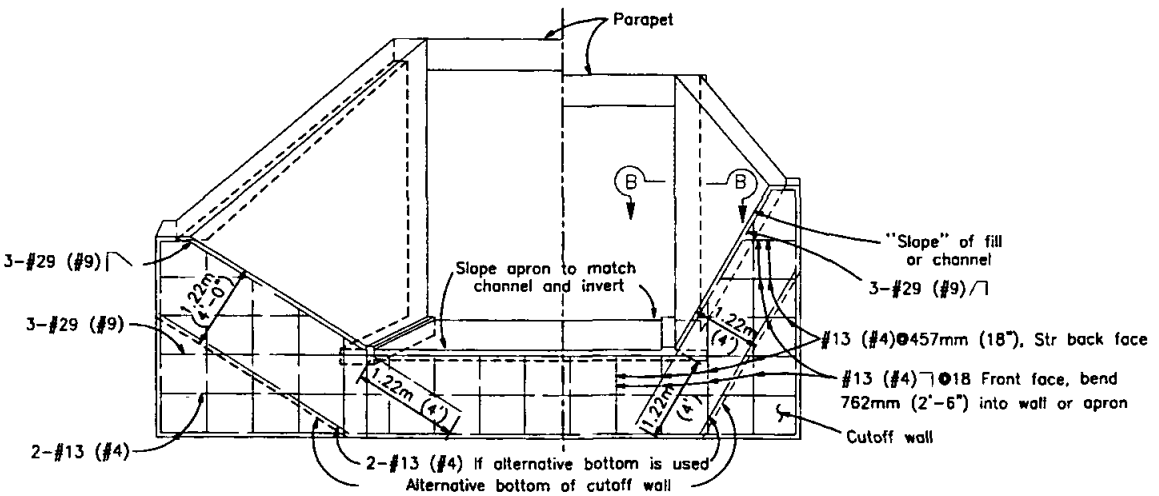

END ELEVATION

Revision	By	Approved	Date
ORIGINAL		Kercheval	12/75
Add Metric		T. Stanton	03/03

SAN DIEGO REGIONAL STANDARD DRAWING

BOX CULVERT WARPED WINGWALL DETAILS NO. 1

RECOMMENDED BY THE SAN DIEGO REGIONAL STANDARDS COMMITTEE

T. Stanton 3/10/2003

Chairperson R.C.E. 19246 Date

DRAWING NUMBER D-80A

This drawing is NOT in conformance with latest UBC and should be used with care and judgment.

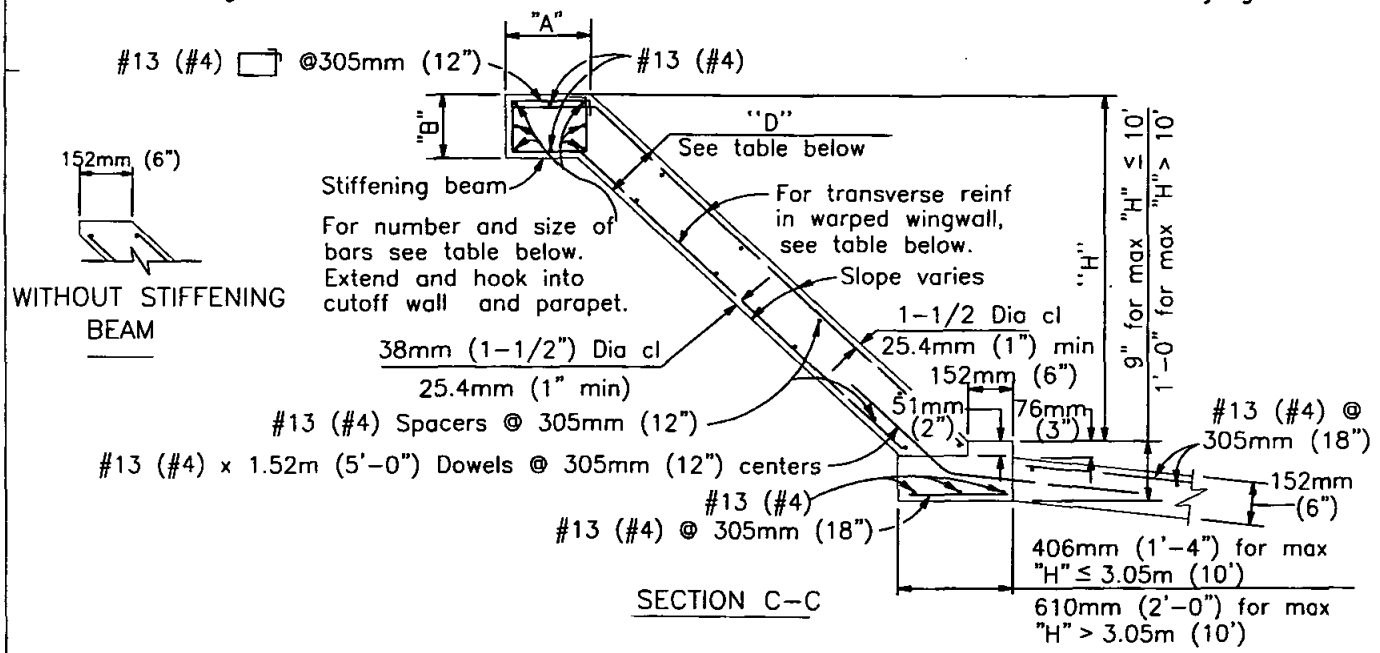

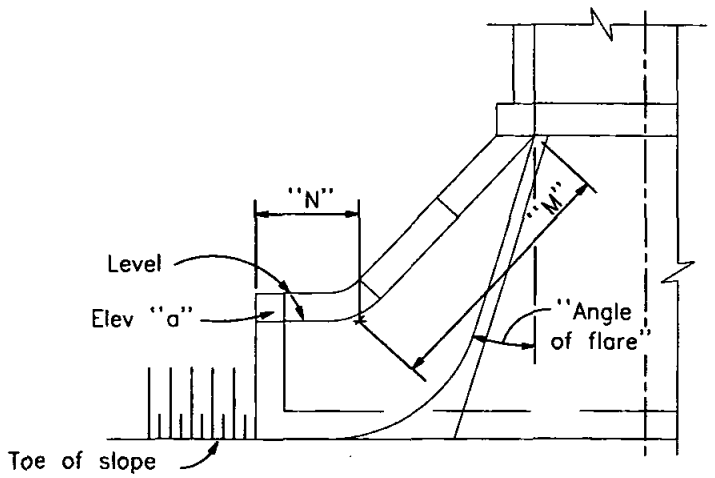

ALTERNATIVE WARPED WINGWALL

Use where additional protection to toe of embankment is required.

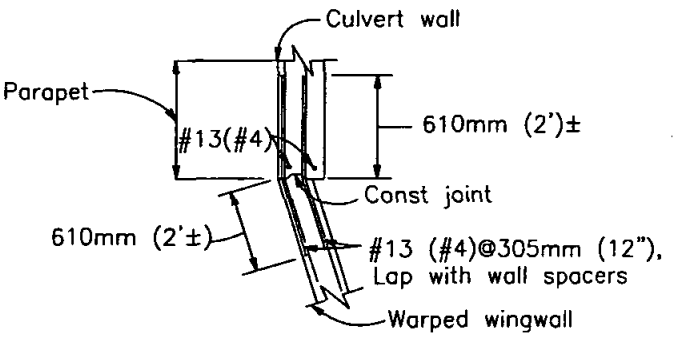

SECTION B-B

NOTES

Walls designed for 610mm (2') surcharge; earth density = 3.40 cu. m (120 #/cu. ft.); equivalent fluid pressure = 1.0 cu m (36 #/cu. ft.)

Vary "D" of warped wall uniformly from that at cutoff wall to that at culvert, for maximum "H" > 3.66m (12').

Where abrasion is anticipated increase apron thickness to 178mm (7") minimum to provide 51mm (2") minimum reinforcement coverage.

Dimensions "L", "W", "H", "M", "N", Elevation "a"," Angle of flare", and end "Slope" (as apply) are shown on the plans.

Concrete shall be 332 kg/M^3-C-22Mpa (560-C-3250).

Revision	By	Approved	Date
ORIGINAL		A.Kercheval	12/75
Add Metric		T. Stanton	03/03

SAN DIEGO REGIONAL STANDARD DRAWING

BOX CULVERT WARPED WINGWALL DETAILS No. 2

RECOMMENDED BY THE SAN DIEGO REGIONAL STANDARDS COMMITTEE

3/10/2003

Tim Stanton Chairperson R.C.E. 19246 Date

DRAWING NUMBER D-80B

Revision	By	Approved	Date
ORIGINAL		A.Kercheval	12/75
Add Metric		T. Stanton	03/03

SAN DIEGO REGIONAL STANDARD DRAWING

BOX CULVERT WARPED WINGWALL

DETAILS No. 2

WARPED WINGWALLS – METRIC MEASUREMENT TABLE ONLY

WALL DIMENSIONS AND REINFORCING

Element Slope	"H"	2.44or less bar mm	3.05 bar mm	12' bar mm	14' bar mm	16' bar mm	18' bar mm	20' bar mm
1/4:1	Front face reinf	#13@305	#13@178	#16@178	#16@127	#19@152	#22@178	#22@152
	Rear face reinf	#13@305	#13@305	#13@305	#13@305	#13@305	#13@305	#13@305
3/4:1	Front face reinf	#13@305	#13@305	#13@305	#13@305	#13@254	#13@203	#13@152
	Rear face reinf	#13@305	#13@305	#13@305	#13@254	#13@178	#13@152	#16@203
1-1/4:1	Front face reinf	#13@305	#13@305	#13@305	#13@305	#13@305	#13@305	#13@305
	Rear face reinf	#13@203	#13@203	#13@127	#16@152	#19@178	#19@152	#22@152
"D" at Cutoff Wall		152	152	152	191	203	241	279
"D" at Culvert		152	152	152	203	241	279	330

STIFFENING BEAM DIMENSIONS AND REINFORCING

"H" max \ "L"	3.66m	4.27m	4.88m	5.49m	6.10m	7.62m	9.14m	10.7m	12.2m or more
1.83m	No beam. Place 2-#6 in each face along top of wall.								
2.44m		"A"= 305mm							
3.05m		"B"= 229mm							
3.66m			"A"= 457mm						
4.27m	Total 6-#19		"B"= 305mm			"A"=559mm			
4.88m				Total 6-#22		"B"=305mm	"A"=610mm		
5.49m						Total 6-#8	"B"=457MM		
6.10m							Total 8-#29		

WARPED WINGWALLS – U.S. MEASUREMENT TABLE ONLY

WALL DIMENSIONS AND REINFORCING

Element Slope	"H"	8'or less	10'	12'	14'	16'	18'	20'
1/4:1	Front face reinf	#4@12	#4@ 7	#5@ 7	#5@ 5	#6@ 6	#7@ 7	#7@ 6
	Rear face reinf	#4@12	#4@12	#4@12	#4@12	#4@12	#4@12	#4@12
3/4:1	Front face reinf	#4@12	#4@12	#4@12	#4@12	#4@10	#4@ 8	#4@ 6
	Rear face reinf	#4@12	#4@12	#4@12	#4@10	#4@ 7	#4@ 6	#5@ 8
1-1/4:1	Front face reinf	#4@12	#4@12	#4@12	#4@12	#4@12	#4@12	#4@12
	Rear face reinf	#4@ 8	#4@ 8	#4@ 5	#5@ 6	#6@ 7	#6@ 6	#7@ 6
"D" at Cutoff Wall		6"	6"	6"	7-1/2"	8"	9-1/2"	11"
"D" at Culvert		6"	6"	6"	8"	9-1/2"	11"	1'-1"

STIFFENING BEAM DIMENSIONS AND REINFORCING

"H" max \ "L"	12'	14'	16'	18'	20'	25'	30'	35'	40' or more
6'	No beam. Place 2-#6 in each face along top of wall.								
8'		"A"= 1'-0"							
10'		"B"= 9"							
12'			"A"= 1'-6"						
14'	Total 6-#6		"B"= 1'-0"			"A"= 1'-10"			
16'				Total 6-#7		"B"=1'-0"	"A"=2'-0"		
18'						Total 6-#8	"B"= 1'-6"		
20'							Total 8-#9		

RECOMMENDED BY THE SAN DIEGO REGIONAL STANDARDS COMMITTEE

Tim Stanton 3/10/2003
Chairperson R.C.E. 19246 Date

DRAWING NUMBER D-80C

This drawing is NOT in conformance with latest UBC and should be used with care and judgment.

This drawing is NOT in conformance with latest UBC and should be used with care and judgment.

GENERAL NOTES

QUANTITIES: Quantities are for the sloped invert slab and do not include splices in the longitudinal bars, nor temperature reinforcement for exposed top culvert, nor concrete or reinforcement for parapets or cutoff walls

SPECIAL COVERAGE: Box standard plans are not to be used for culverts in a corrosive environment or where there is a severe abrasive flow condition

DESIGNATION: Show on plans as span x height-strength classification x length, thus 1.22m x 1.22m-A x 18.3m (4 x 4-A x 60'), followed by alternatives.

ALTERNATIVES: Invert will be sloped unless "Trapezoidal Invert", "Flat Invert" or "V Invert" is included in designation. Ends of culvert will be rounded unless "Square Ends" are designated. Parapets will be as shown unless "__ ft. parapet" is designated in plans. Such designations may be different for inlet and outlet ends.

REINF. PLACEMENT: Main Reinforcement is positioned transverse or, for curved culverts, radial when radial, reinforcing spacing is measured along ℄.

CONSTRUCTION NOTES

CONCRETE: Bottom slab & walls shall be class 332 kg/M^3 -B-22Mpa (560-B-3250). Top slab shall be class 332 kg/M^3 -C-22Mpa (560-C-3250).

EXPANSION JOINTS: Bottom Slab-No expansion joints shall be placed.
Top Slab and Walls-When cover is less than span length, place 13mm (1/2") expansion joint filler at 15.2m (50')± centers outside the paved roadway lanes and place bridge detail 3-2 at 9.14m (30')± centers under paved roadway lanes.
When cover is more than span

CONSTRUCTION LOADS: Not permitted until concrete has reached a strength of 20.7Mpa (3,000p.s.i.) or age of 28 days, whichever occurs first, and falsework plans have been submitted by the Contractor, to the Engineer, and approved.

CONSTRUCTION JOINTS: Temporary joints may be permitted if normal (or radial) to C of R.C.B. otherwise, the Contractor is to submit a proposal for consideration.

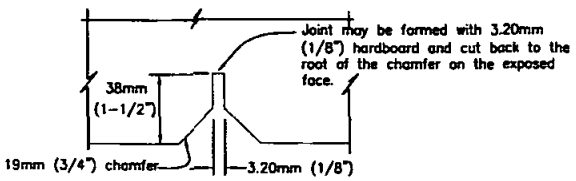

BRIDGE DETAIL 3-2
(Portion)

See Standard Drawing C-15

DESIGN NOTES

SPECIFICATIONS
DESIGN: AASHO, dated 1973, with revisions as supplemented by State of California Bridge Planning and Design Manual.

Sections designed for culvert in a trench on hard foundation, or culvert untrenched on yielding foundation, for culverts on piles or rock foundations, special design will be required.

LOADING
LIVE LOAD: For legal highway loads, use HS20-44 or Alternative with 30% impact for all cover depths, no impact on invert.

COVER LESS THAN 610mm (2') - Wheel load distribution on the top slab is E=0.175S+3.2' longitudinally and concentrated along the span. Wheel load distribution on the invert slab is 2.29m (7.5')longitudinally and uniformly over the breath of the culvert.

COVER 610mm (2') OR MORE - Wheel loads distributed uniformly over a square, the sides of which are 1.75 times the depth of cover, but not less longitudinally than E on the top slab, or 2.29m (7.5') on the invert slab when such areas from several wheel concentrations overlap, the total load shall be considered as uniformly distributed over the area defined by the outside limits of the individual areas, but the overall longitudinal dimension shall not exceed the total length of the supporting slab. Neglect live load, on single spans when cover is more than 2.44m (8') and exceeds span, and on multiple spans when cover exceeds distance between exterior walls.

DEAD LOAD: Earth load of 120 pcf and an equivalent fluid pressure of 36 pcf, reduced to 84 pcf and 25 pcf respectively for clear spans of 20' or less.

UNIT STRESSES: Fs = 138Mpa (20,000 psi), N = 10
Fc = 8.27Mpa (1,200 psi)

Reinforcement embedment is 38mm (1-1/2) dia. clear, min 25.4mm (1") and in 6.35mm (1/4") increments, except as noted.

Distribution "d" bars expressed as a percent of main positive reinforcement.

Classification "A" top slab $=\frac{100}{\sqrt{SPAN}}$,max 50% (unless traffic longitudinal)

Classification "B" to "E": Top and bottom slabs #13 (#4) @ 457mm (18") max.

USE OF STANDARD DRAWING

"Strength Classification, symbolized by the letters "A", "B", "C" etc., at the top of the data table is merely a convenient designation for a particular structural section for a culvert of any given opening it is dictated by the cover or depth of fill over the the top slab.

LIVE LOAD & R.C.B. TERMINOLOGY

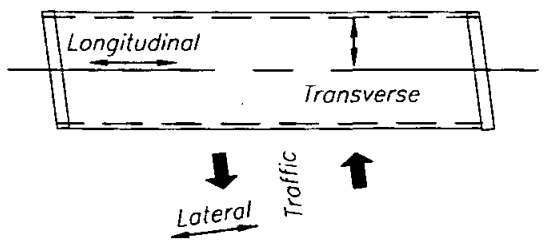

Revision	By	Approved	Date
ORIGINAL		Kercheval	12/75
Add Metric		T. Stanton	03/03

SAN DIEGO REGIONAL STANDARD DRAWING

BOX CULVERT
MISCELLANEOUS DETAILS No. 1

RECOMMENDED BY THE SAN DIEGO REGIONAL STANDARDS COMMITTEE

T. Stanton 3/01/2003
Chairperson R.C.E. 19246 Date

DRAWING NUMBER D-81A

This drawing is NOT in conformance with latest UBC and should be used with care and judgment.

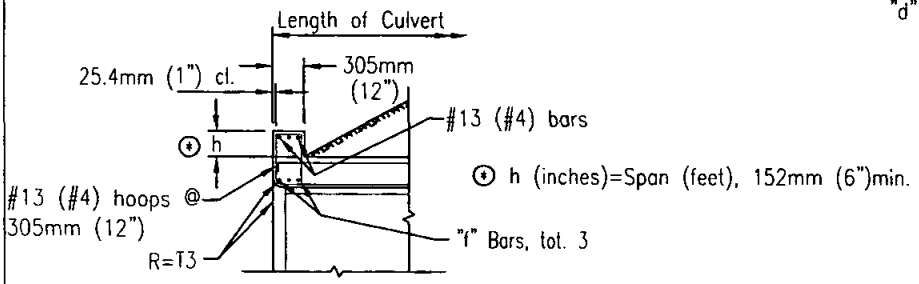

PART SECTION

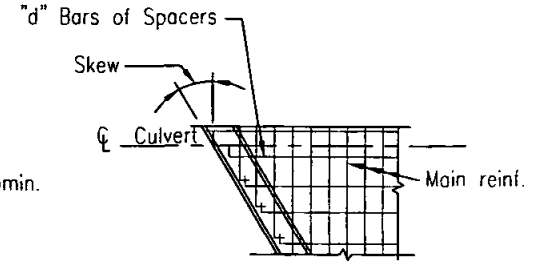

PART PLAN–SKEWED

PARAPET "f" BAR Nos.	SKEW ANGLE		
SPAN	0° TO 15°	16° TO 30°	31° TO 45°
1.22M (4')	#13 (#4)	#13 (#4)	#13 (#4)
1.83M (6')	#13 (#4)	#13 (#4)	#16 (#5)
2.44M (8')	#13 (#4)	#16 (#5)	#19 (#6)
3.05M (10')	#16 (#5)	#19 (#6)	#22 (#7)
3.66M (12')	#19 (#6)	#22 (#7)	#25 (#8)
4.27M (14')	#22 (#7)	#25 (#8)	#29 (#9)

PARAPET DETAILS FOR SINGLE SPAN CULVERTS

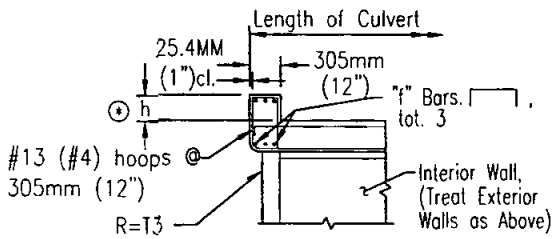

PART SECTION

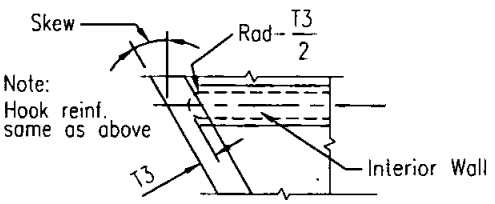

PART PLAN–SKEWED

PARAPET DETAILS FOR MULTIPLE SPAN CULVERTS

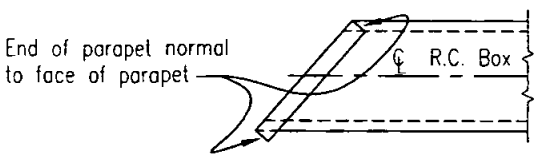

PAPAPET DETAIL FOR SKEWED CULVERTS W/O WINGWALLS

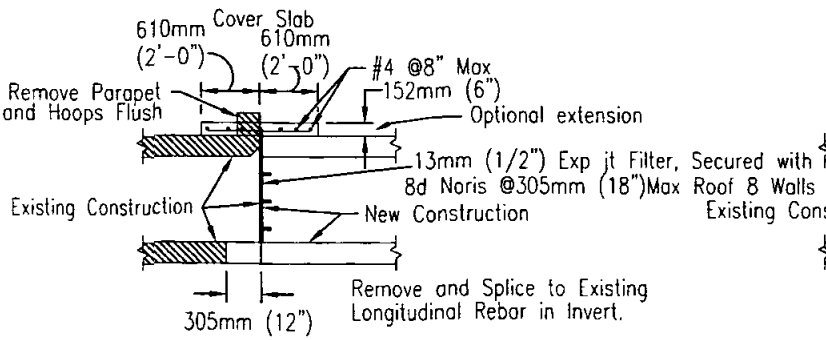

COVER: 305mm (1') AND GREATER

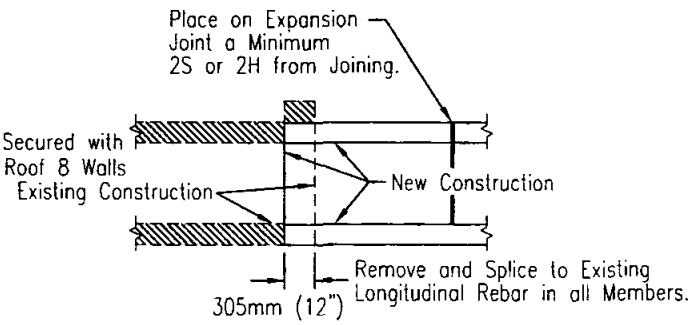

COVER: EXPOSED TOP AND GREATER

CULVERT EXTENSION

20° SKEW MAXIMUM

Revision	By	Approved	Date
ORIGINAL		Kercheval	12/75
Add Metric		T. Stanton	03/03

SAN DIEGO REGIONAL STANDARD DRAWING

BOX CULVERT

MISCELLANEOUS DETAILS NO. 2

RECOMMENDED BY THE SAN DIEGO REGIONAL STANDARDS COMMITTEE

T. Stanton 3/10/2003

Chairperson R.C.E. 19246 Date

DRAWING NUMBER D-81B

This drawing is NOT in conformance with latest UBC and should be used with care and judgment.

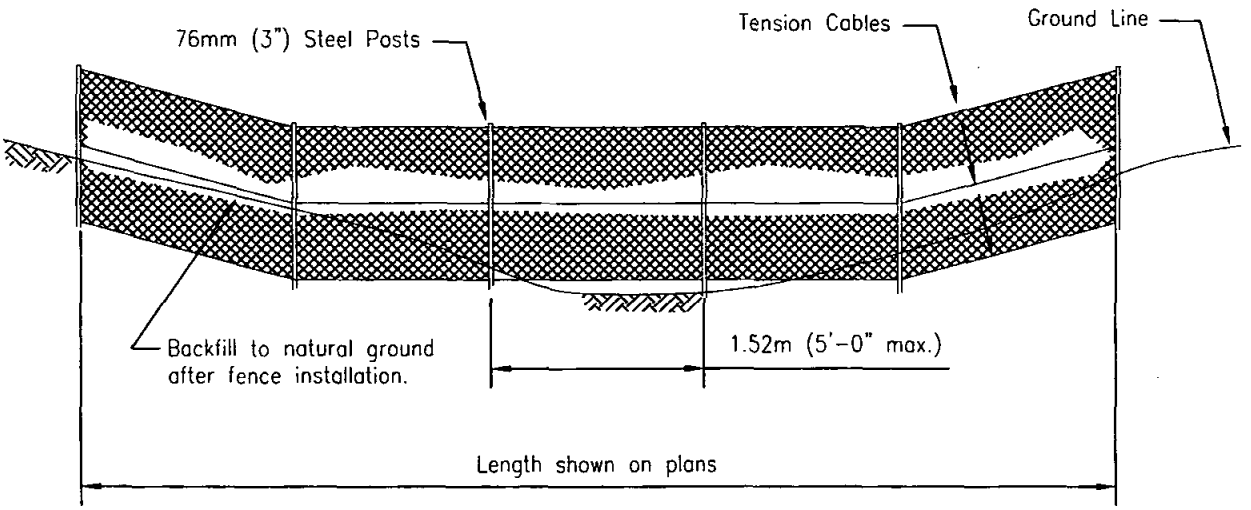

ELEVATION

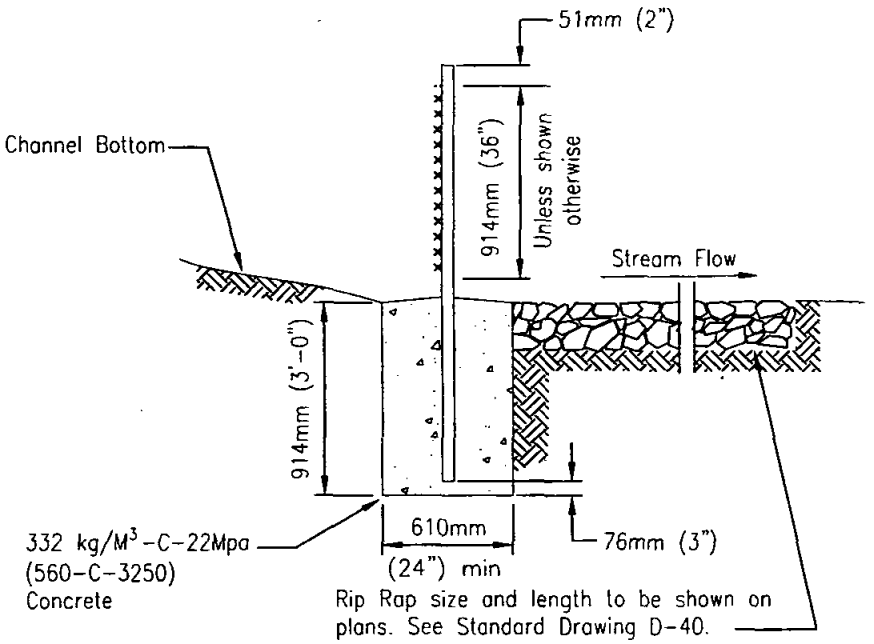

SECTION

NOTES:

1. Fence fabric shall be 51mm (2") mesh, 9 gage galvanized wire, chain link placed on the upstream side of the posts and tension cables.

2. Tension cable shall be 8mmø (5/16") steel at 457mm (18") c/c, secured at ends with cable clamps. Secure fence to cable with No. 12 galvanized steel wire looped at 152mm (6") c/c.

3. Posts shall be 76mmø (3") steel pipe, 2.63kg (5.79) lb/ft. Fill with mortar after placing.

4. Fence fabric shall be secured to posts with 9 gage wire clips at 229mm (9") c/c.

LEGEND ON PLANS

Revision	By	Approved	Date
ORIGINAL		H. Hecht	10/82
Add Metric		T. Stanton	03/03

SAN DIEGO REGIONAL STANDARD DRAWING

DEBRIS FENCE

RECOMMENDED BY THE SAN DIEGO REGIONAL STANDARDS COMMITTEE

3/01/2003

Chairperson R.C.E. 19246 Date

DRAWING NUMBER D-82

ELECTRICAL SYSTEMS

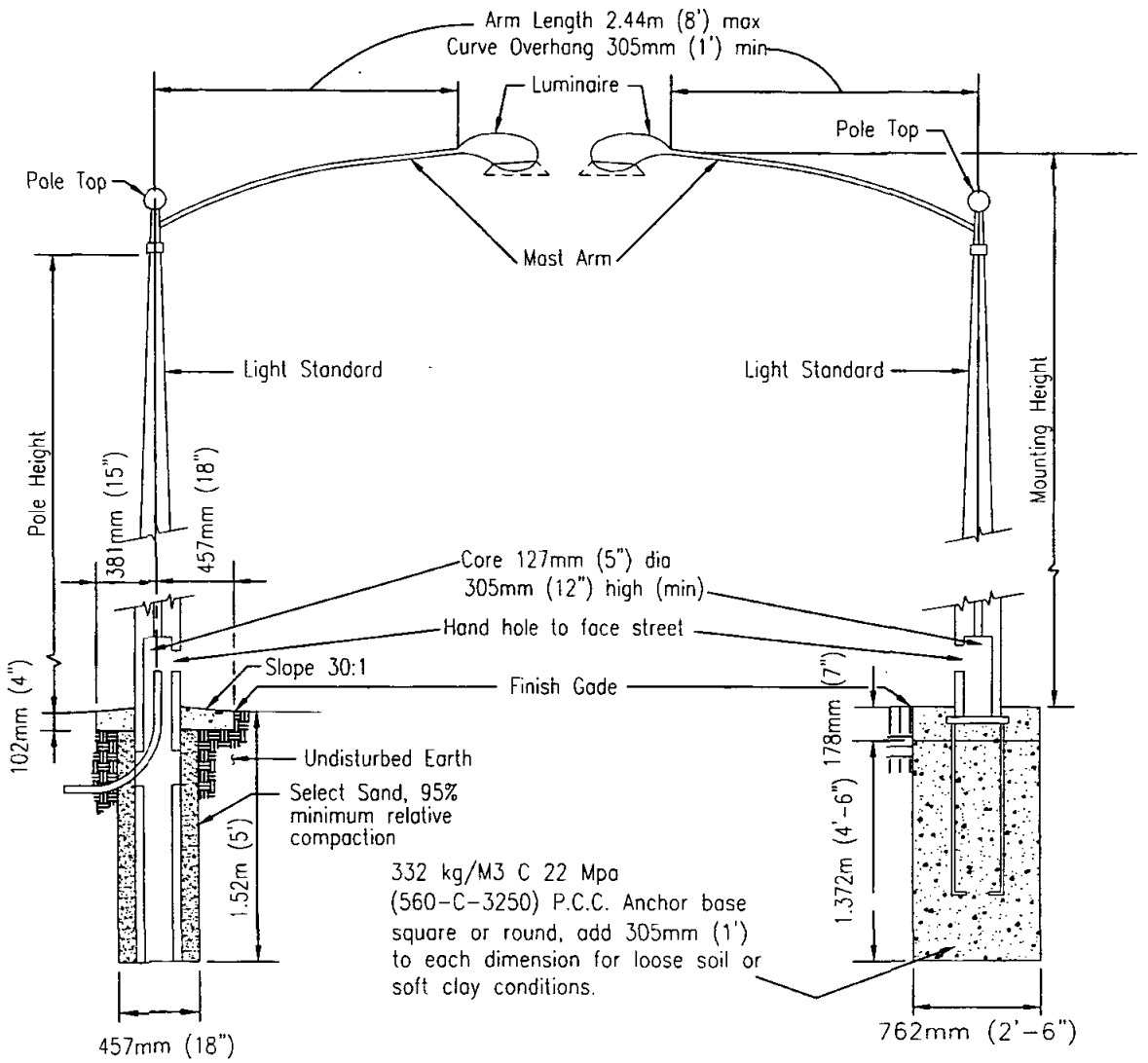

DIRECT BURIAL FOUNDATION

ANCHOR BASE FOUNDATION

POLE HEIGHT	MOUNTING HEIGHT	LAMP SIZE (WATTS)
7.62m ±610mm 25' ±2'	8.23m ±305mm 27' ±1'	170 M.V. 100 H.P.S. 90 L.P.S.
8.53m ±610mm 28' ±2'	9.14m ±305mm 30' ±1'	400 M.V. 250 H.P.S. 180 L.P.S.
7m 23' -0"	8.15m 26' -9"	70 H.P.S.
8.1m 26' -6"	9.14m 30' -0"	150 H.P.S.

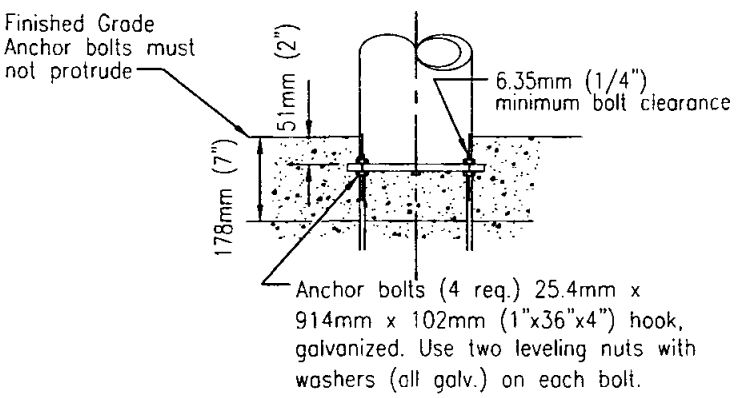

Revision	By	Approved	Date
ORIGINAL		Kercheval	12/75
Add Metric		T. Stanton	03/03

SAN DIEGO REGIONAL STANDARD DRAWING

STREET LIGHTING STANDARD

RECOMMENDED BY THE SAN DIEGO REGIONAL STANDARDS COMMITTEE

T. Stanton 3/10/2003

Chairperson R.C.E. 19246 Date

DRAWING NUMBER E-1

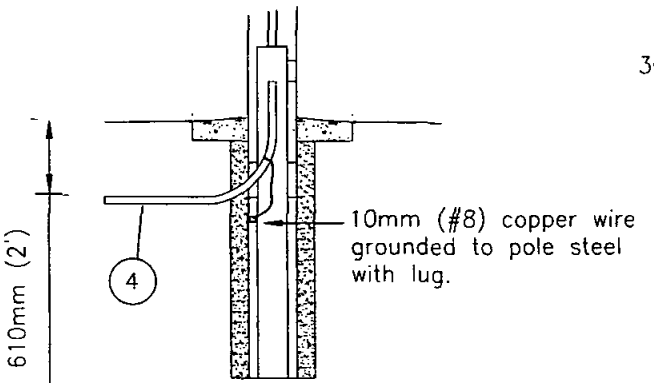

STEEL CONDUIT

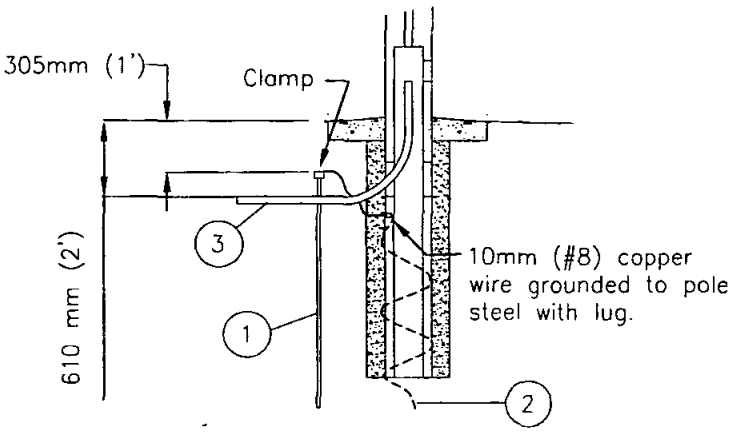

NON-METALLIC CONDUIT

DIRECT BURIAL FOUNDATION

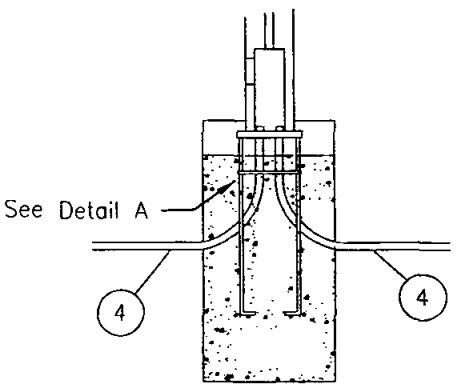

STEEL CONDUIT

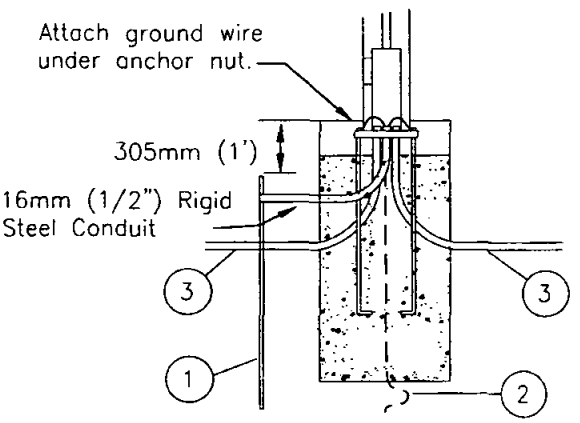

NON-METALLIC CONDUIT

ANCHOR BASE FOUNDATION

1. 19mm x 2.4m (3/4" x 8') copper covered steel ground rod.
2. Alternate Ground: 4.57m (15") 35mm (no. 4) stranded copper wire, coiled.
3. Approved non-metallic conduit.
4. Steel conduit.

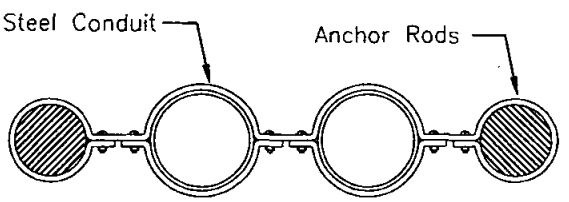

DETAIL A

Revision	By	Approved	Date
ORIGINAL		Kercheval	12/75
Add Metric		T. Stanton	03/03

SAN DIEGO REGIONAL STANDARD DRAWING

GROUNDING OF CONCRETE LIGHTING STANDARDS

RECOMMENDED BY THE SAN DIEGO REGIONAL STANDARDS COMMITTEE

T. Stanton 3/10/2003

Chairperson R.C.E. 19246 Date

DRAWING NUMBER E-2

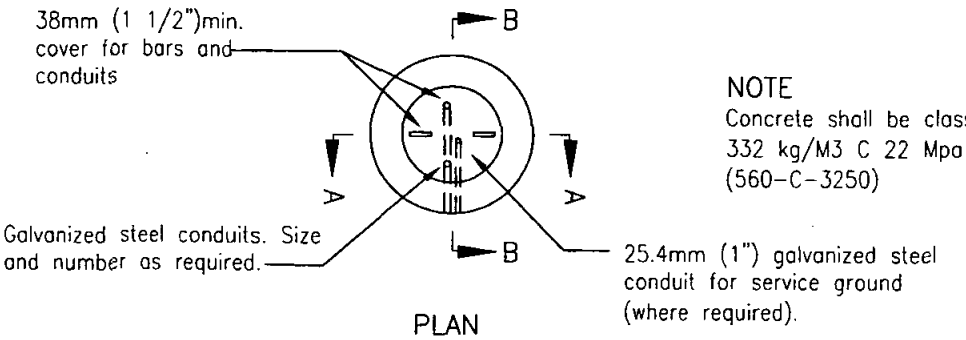

PLAN

NOTE
Concrete shall be class 332 kg/M3 C 22 Mpa (560-C-3250)

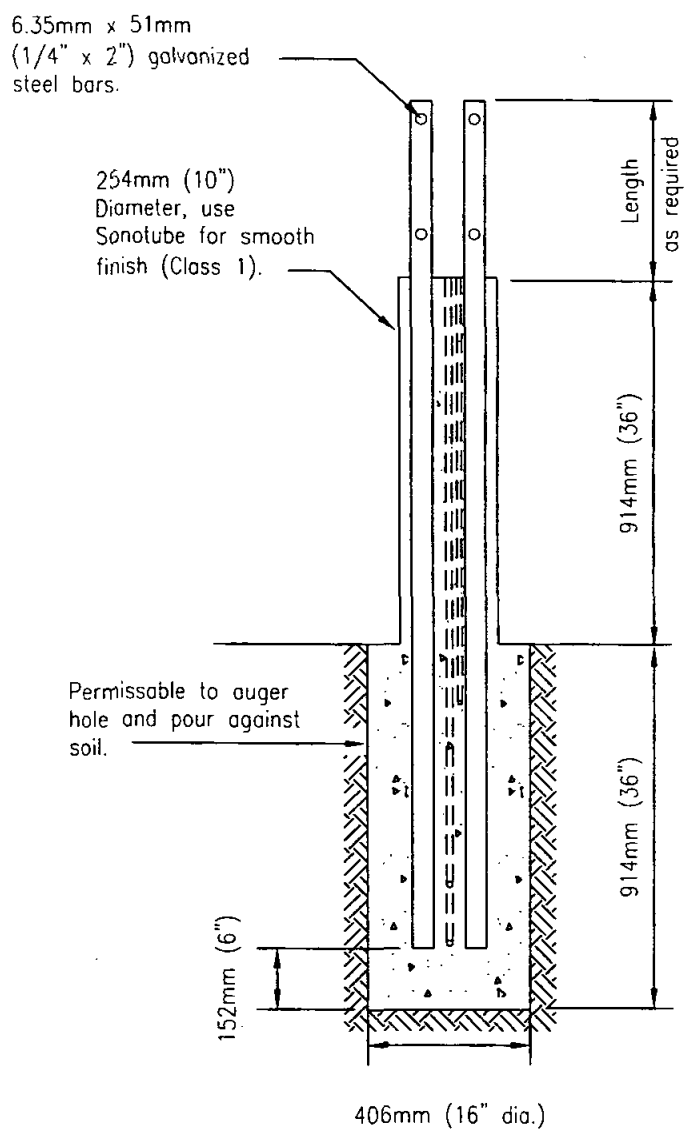

SECTION A-A

STEEL & CONCRETE DIMENSIONS

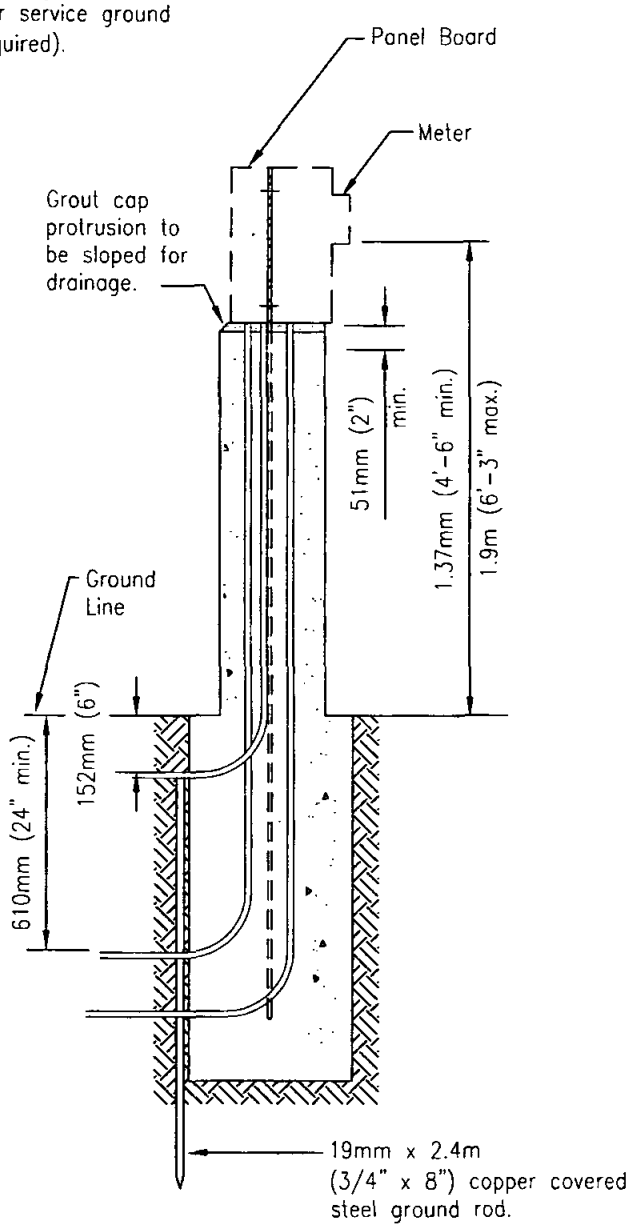

SECTION B-B

CONDUIT & EQUIPMENT

Revision	By	Approved	Date
ORIGINAL		Kercheval	12/75
Add Metric		T. Stanton	03/03

SAN DIEGO REGIONAL STANDARD DRAWING

PEDESTAL FOR ELECTRICAL EQUIPMENT

RECOMMENDED BY THE SAN DIEGO REGIONAL STANDARDS COMMITTEE

T. Stanton 3/10/2003

Chairperson R.C.E. 19246 Date

DRAWING NUMBER E-33

GENERAL SURFACE IMPROVEMENTS

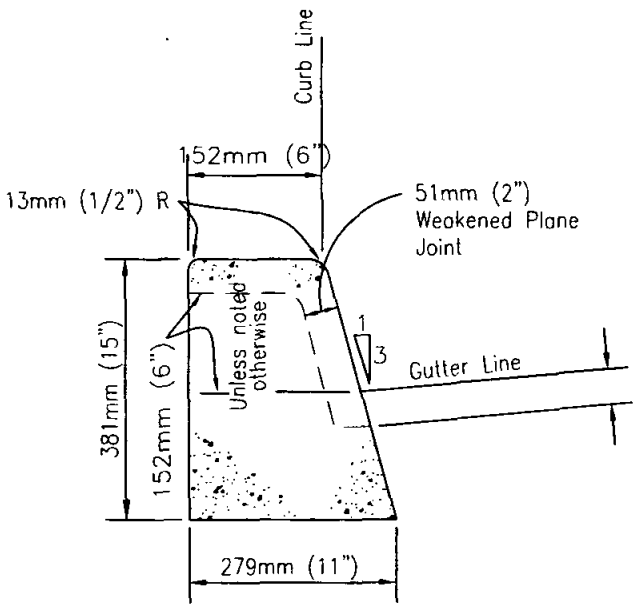

152mm (6") CURB
Area=0.083m (0.89 Sq. Ft.)

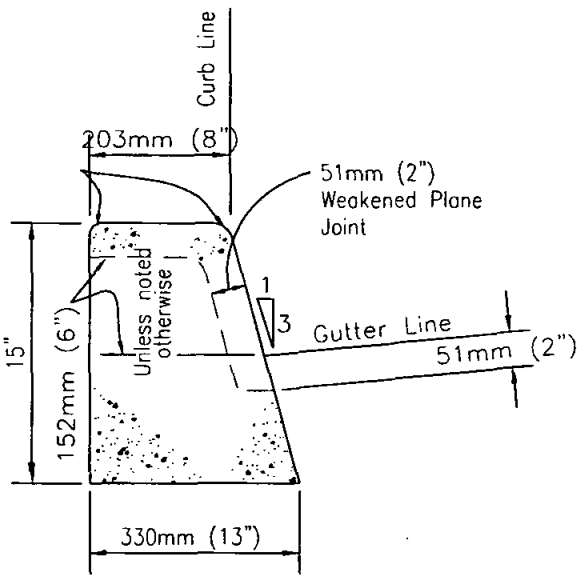

203mm (8") CURB
Area=0.1m (1.09 Sq. Ft.)

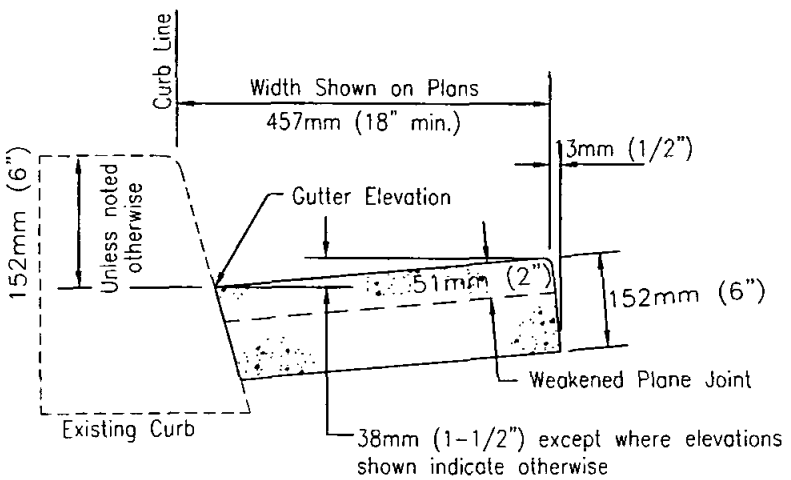

GUTTER

NOTES

1. Concrete shall be 308kg/M^2 -C-17-Mpa (520-C-2500).
2. See Standard Drawing G-10 for joint details.
3. Slope top of curb 6.35mm (1/4") per foot toward street.

LEGEND ON PLANS

152mm (6") curb

Revision	By	Approved	Date
ORIGINAL		Kercheval	12/75
Add Metric		T. Stanton	03/03

SAN DIEGO REGIONAL STANDARD DRAWING

CURBS AND GUTTER - SEPARATE

RECOMMENDED BY THE SAN DIEGO REGIONAL STANDARDS COMMITTEE

T. Stanton 3/10/2003

Chairperson R.C.E. 19246 Date

DRAWING NUMBER G-1

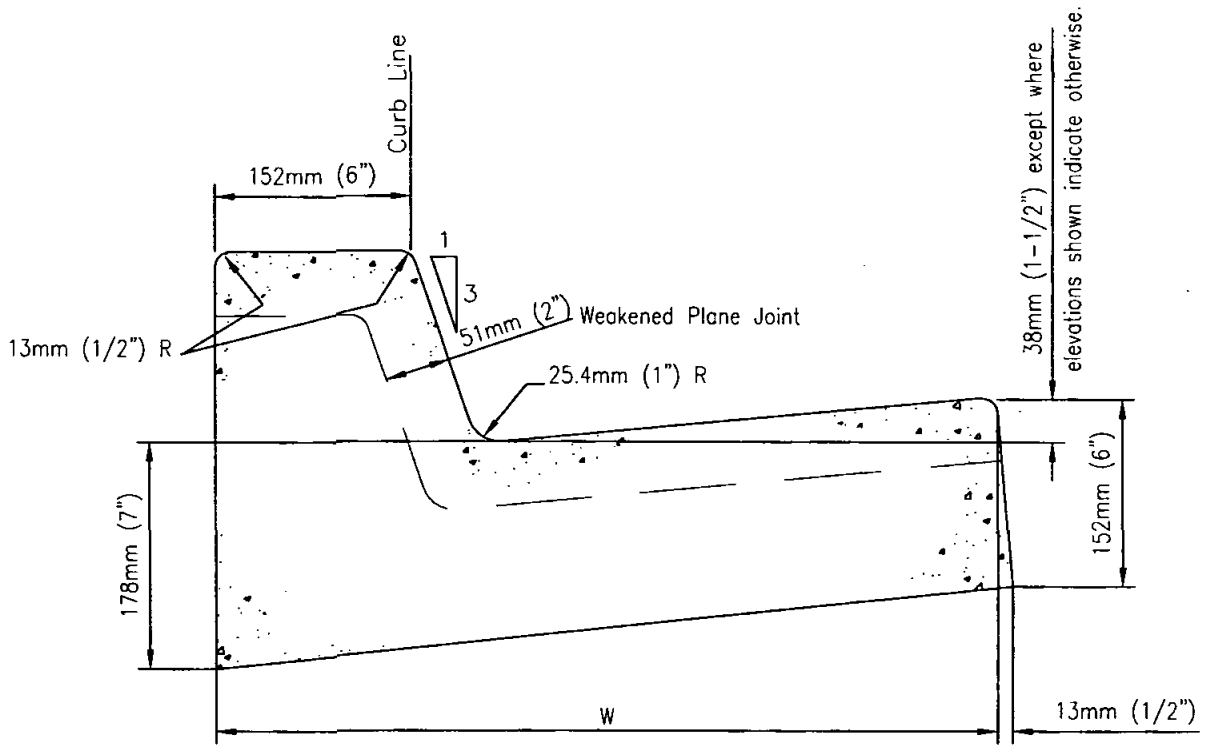

TYPE	W	*AREA
G	610mm (24")	.124sq. m (1.34sq ft.)
H	762mm (30")	.150sq. m (1.61sq ft.)

* with 152mm (6") Curb Face

NOTES

1. Concrete shall be 308kg/M3-C-17-Mpa (520-C-2500).
2. See Standard Drawing G-10 for joint details.
3. Slope top of curb 6.35mm (1/4") per foot toward street.

LEGEND ON PLANS

Revision	By	Approved	Date
ORIGINAL		Kercheval	12/75
Add Metric		T. Stanton	03/03

SAN DIEGO REGIONAL STANDARD DRAWING

CURB AND GUTTER - COMBINED

RECOMMENDED BY THE SAN DIEGO REGIONAL STANDARDS COMMITTEE

T. Stanton 3/10/2003

Chairperson R.C.E. 19246 Date

DRAWING NUMBER G-2

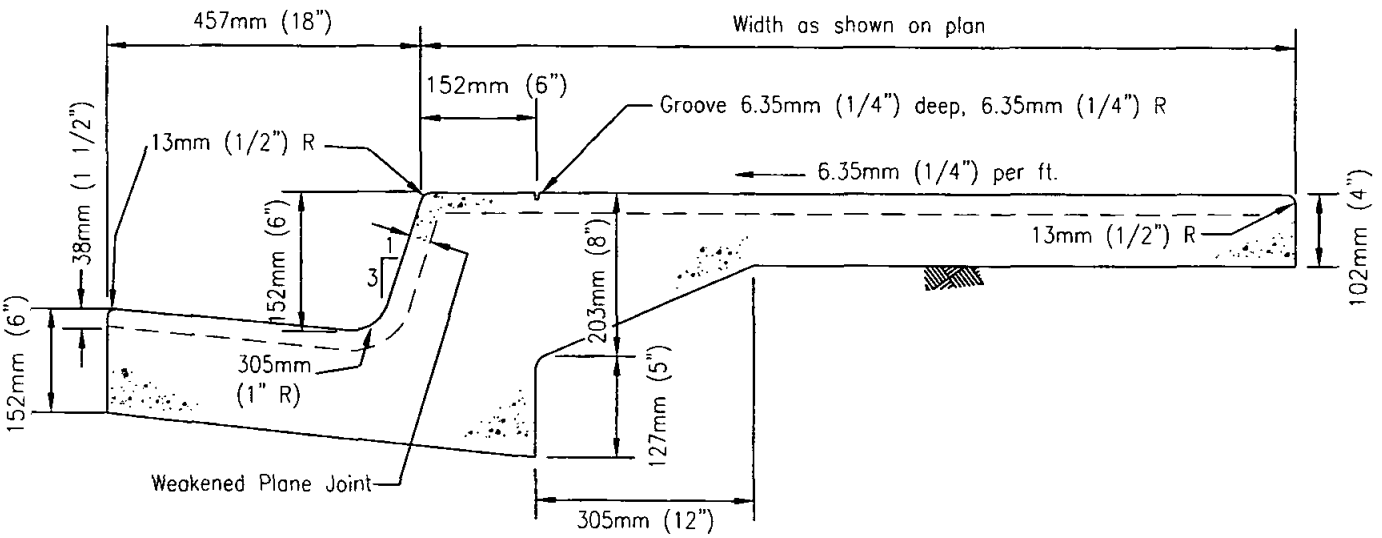

NOTES

1. Concrete shall be 308kg/M3-C-17-Mpa (520-C-2500).
2. See Standard Drawing G-10 for joint details.
3. Monolithic curb, gutter and sidewalk is to be used with Agency approval only.

LEGEND ON PLANS

Revision	By	Approved	Date
ORIGINAL		Kercheval	12/75
Add Metric		T. Stanton	03/03

SAN DIEGO REGIONAL STANDARD DRAWING

MONOLITHIC CURB,
GUTTER AND SIDEWALK

RECOMMENDED BY THE SAN DIEGO REGIONAL STANDARDS COMMITTEE

T. Stanton 3/10/2003

Chairperson R.C.E. 19246 Date

DRAWING NUMBER G-3

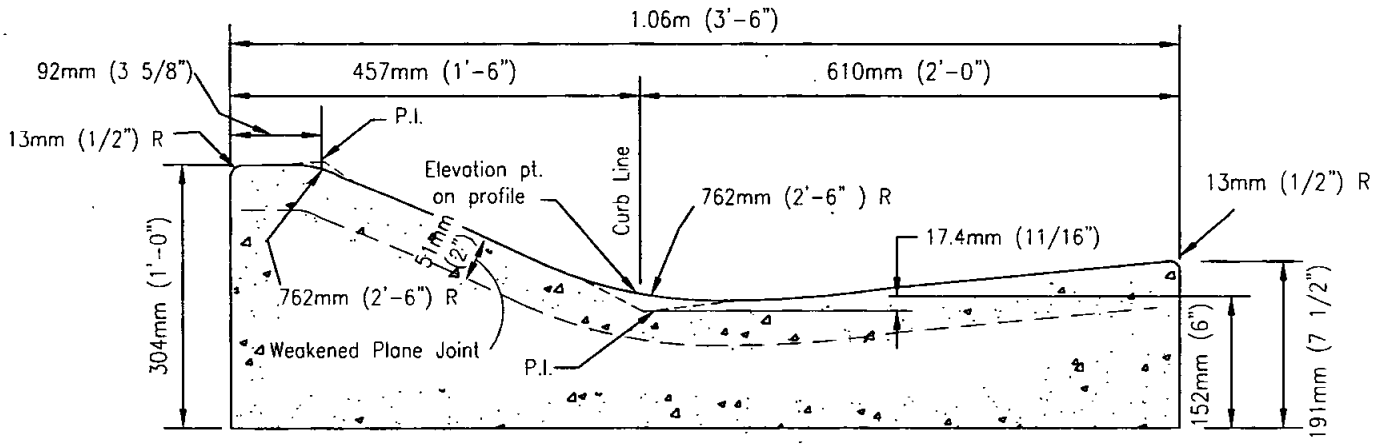

TYPE A
CURB AREA
(.21m (2.23 sq. ft.))

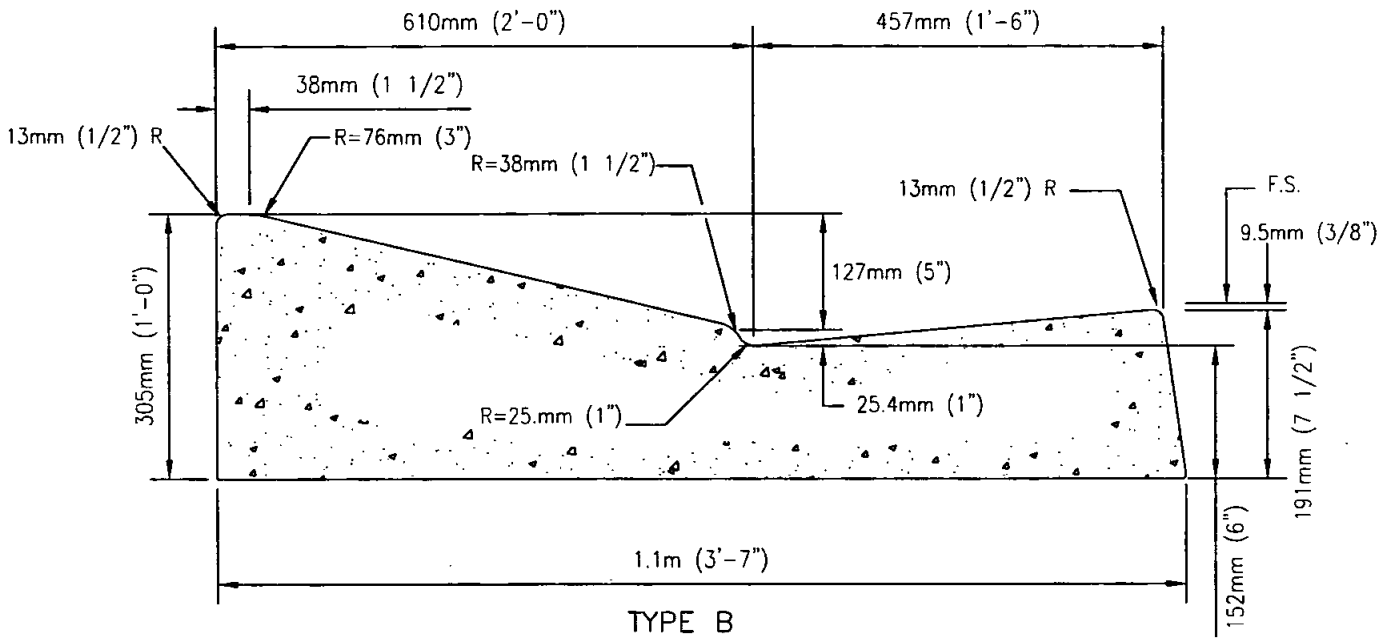

TYPE B
CURB AREA
(.230sq. m (2.48 sq. ft))

NOTES

1. Transition to type G curb at all curb returns, except where sidewalk ramps are provided, and at all cul-de-sacs with drainage structures.
2. Concrete shall be 308kg/M^2 -C-17-Mpa (520-C-2500).
3. See Standard Drawing G-10 for joint details.

LEGEND ON PLANS

Revision	By	Approved	Date
ORIGINAL		Kercheval	12/75
Add Metric		T. Stanton	03/03

SAN DIEGO REGIONAL STANDARD DRAWING

CURB AND GUTTER - ROLLED

RECOMMENDED BY THE SAN DIEGO REGIONAL STANDARDS COMMITTEE

T. Stanton 3/01/2003

Chairperson R.C.E. 19246 Date

DRAWING NUMBER G-4

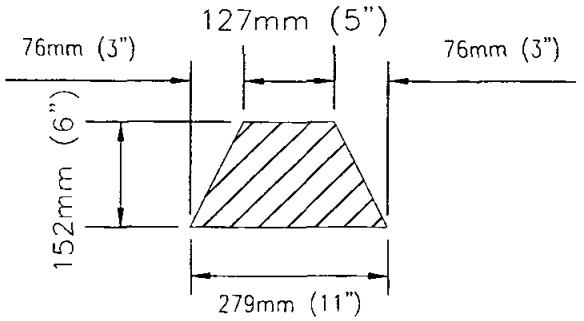

TYPE A

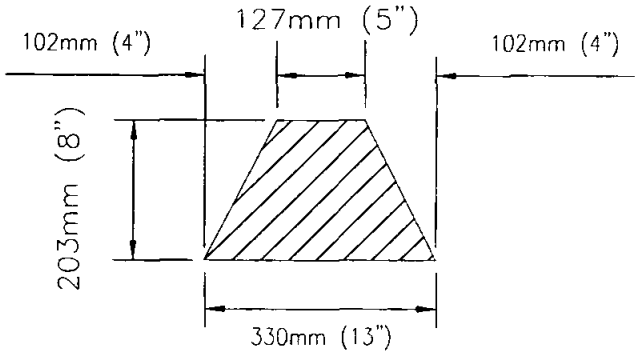

TYPE B

Height 152mm (6"), 203mm (8"), or 229mm (9") as indicated on plans

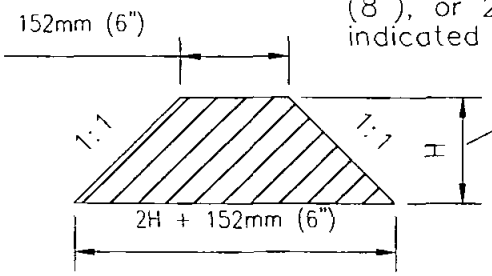

TYPE C

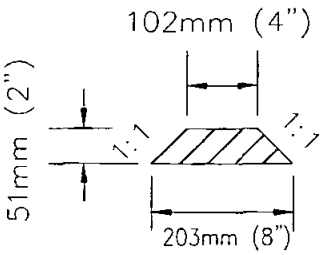

TYPE D

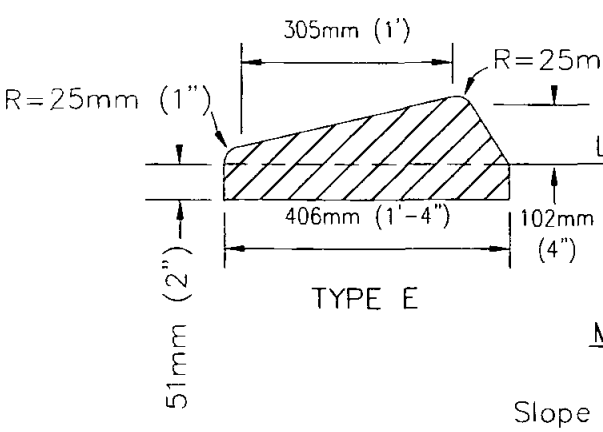

TYPE E

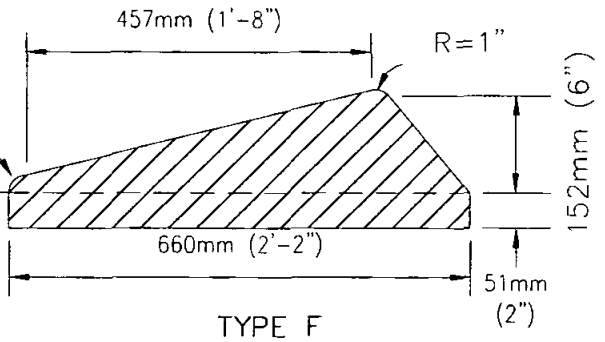

TYPE F

MOUNTABLE DIKES

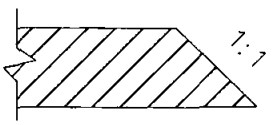

ALL TYPES - SIDE VIEW

Slope end of dike 1:1 when not joining other improvements

APPROX. DIKE QUANTITIES	
TYPE	REQD PER LIN. FT.
A	25.4kg (0.0250 tn.)
B	38.1kg (0.0375 tn.)
C-152mm (6")	38.1kg (0.0375 tn.)
C-203mm (8")	59.2kg (0.0583 tn.)
C-229mm (9")	71.3kg (0.0702 tn.)
D	6.3kg (0.0062 tn.)
E	41.4kg (0.0407 tn.)
F	63.3kg (0.0623 tn.)

NOTES

1. Dike is to be placed on a 51mm (2") of A.C. surfacing, extending throughout the width of the dike.
2. AR-8000 grade asphalt to be used for all dikes.
3. A.C. dikes may be shaped and compacted with an extrusion machine or other equipment capable of shaping and compacting the material to the required cross section.

Revision	By	Approved	Date
ORIGINAL		Kercheval	12/75
Add Metric		T. Stanton	03/03

SAN DIEGO REGIONAL STANDARD DRAWING

DIKES - ASPHALT CONCRETE

RECOMMENDED BY THE SAN DIEGO REGIONAL STANDARDS COMMITTEE

T. Stanton 3/10/2003

Chairperson R.C.E. 19246 Date

DRAWING NUMBER G-5

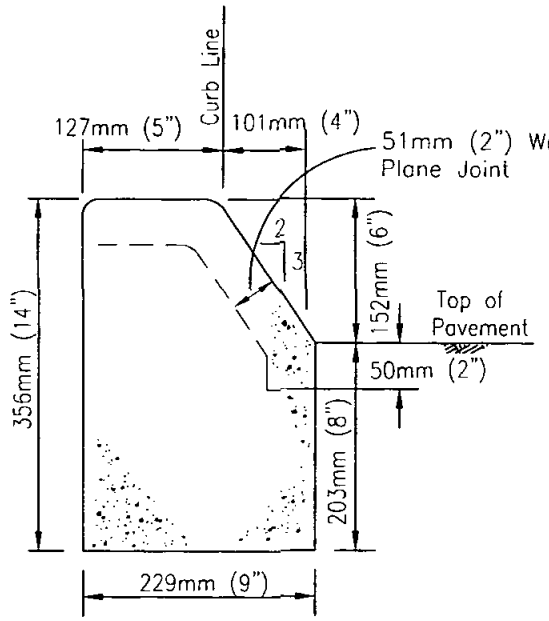

B-1
Area= .073 sq. m (0.79 Sq.Ft.)

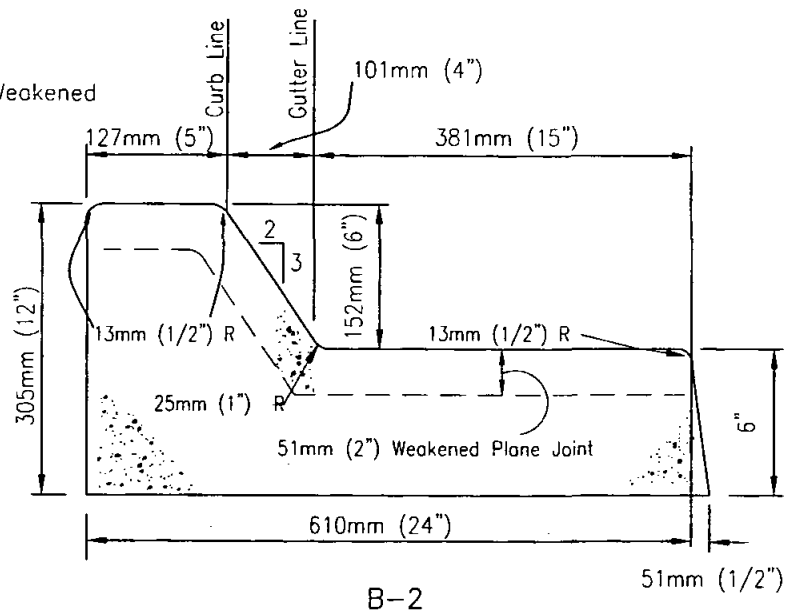

B-2
Area= .120 Sq.m (1.29 Sq.Ft.)

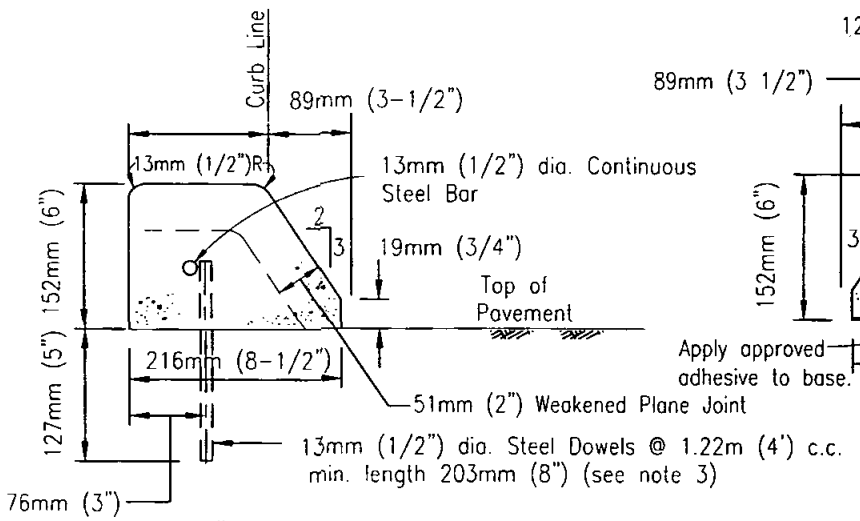

B-3
Area= .027 sq. m (0.29 Sq.Ft.)

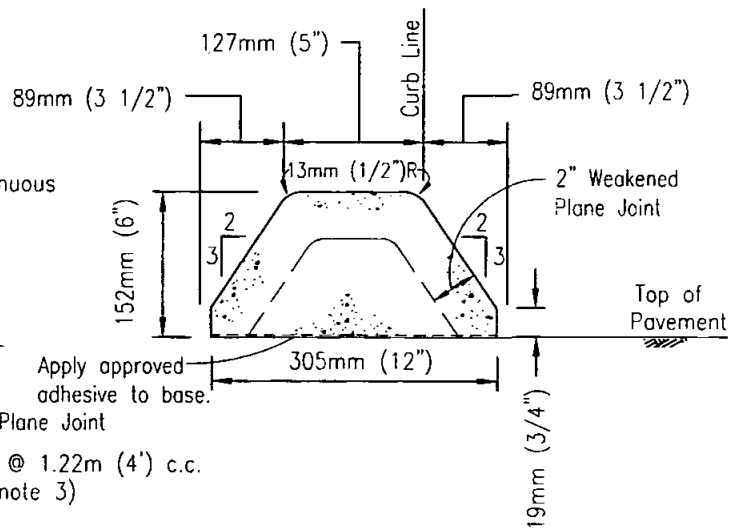

B-4
Area= .033 sq. m (0.35 Sq.Ft.)

NOTES

1. Concrete shall be 308kg/M3-C-17-Mpa (520-C-2500.)
2. See Standard Drawing G-10 for joint details.
3. Extruded type B-3 curb shall be anchored to existing pavement by placing steel dowels and reinforcing steel as shown or by using an approved adhesive.

LEGEND ON PLANS

Type B-2 Curb and Gutter

Type B-1, B-3, B-4 Curb

Revision	By	Approved	Date
ORIGINAL		Kercheval	12/75
Add Metric		T. Stanton	03/03

SAN DIEGO REGIONAL STANDARD DRAWING

CURBS AND GUTTER - MEDIANS

RECOMMENDED BY THE SAN DIEGO REGIONAL STANDARDS COMMITTEE

T. Stanton 3/10/2003

Chairperson R.C.E. 19246 Date

DRAWING NUMBER G-6

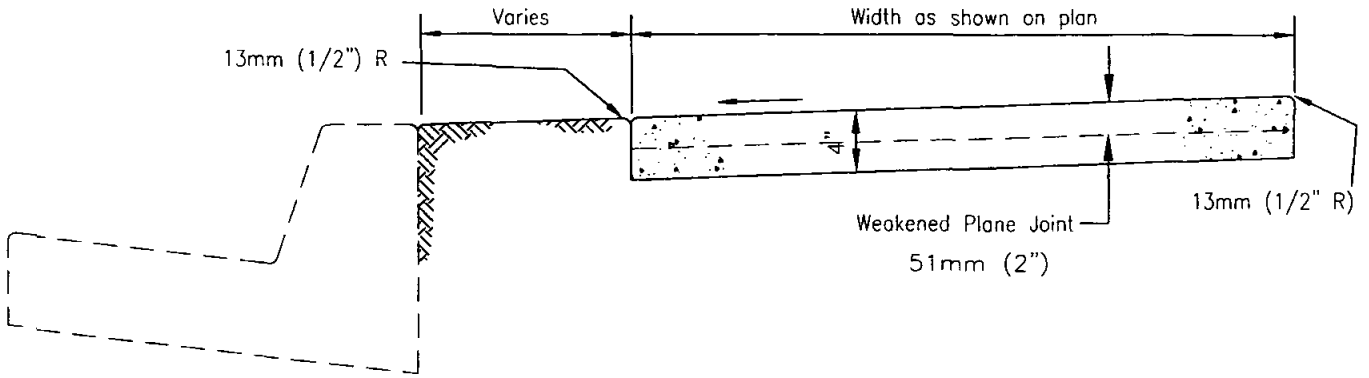

NON–CONTIGUOUS

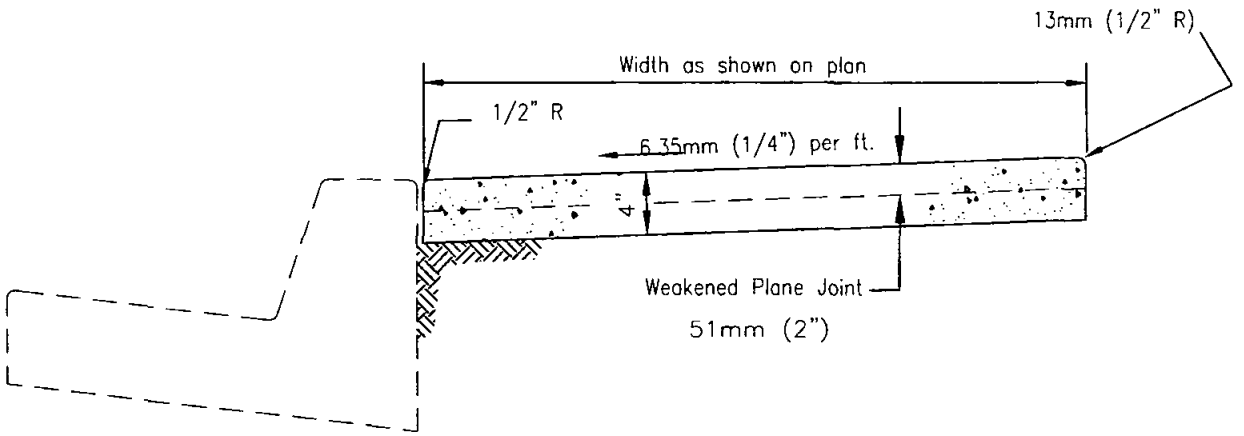

CONTIGUOUS

NOTES

1. Concrete shall be 308 kg/M3 C 17 Mpa (520–C–2500).
2. See Standard Drawing G–9 and G–10 for joint details.

LEGEND ON PLANS

Revision	By	Approved	Date
ORIGINAL		Kercheval	12/75
Add Metric		T. Stanton	03/03

SAN DIEGO REGIONAL STANDARD DRAWING

SIDEWALK – TYPICAL SECTIONS

RECOMMENDED BY THE SAN DIEGO REGIONAL STANDARDS COMMITTEE

T. Stanton 3/10/2003

Chairperson R.C.E. 19246 Date

DRAWING NUMBER G–7

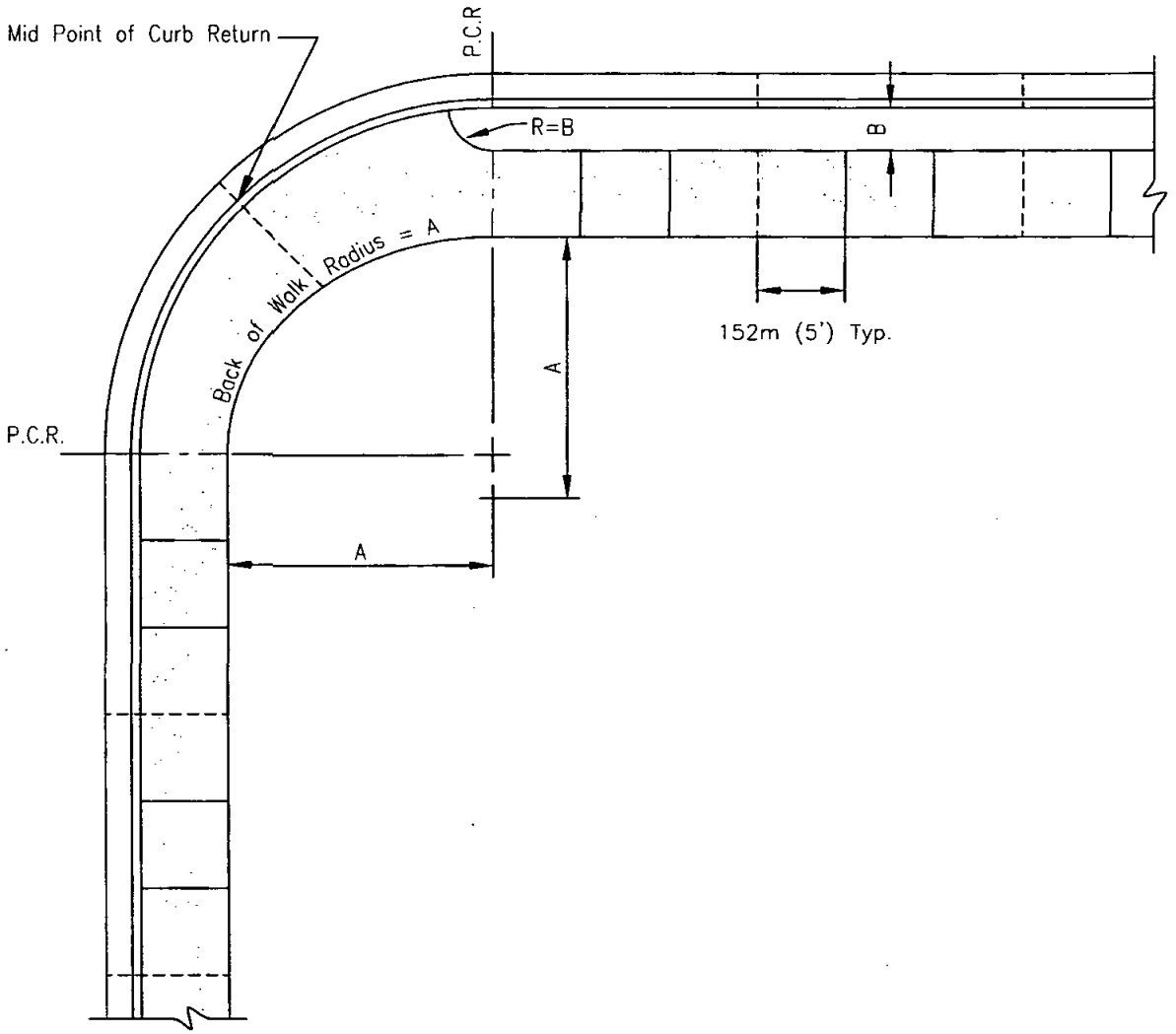

NOTES

1. Expansion joints — - — at curb returns, adjacent to structures and at 13.7m (45') intervals. (See Standard Drawing G-10).

2. Weakened Plane Joints - - - - - - at mid point of curb return, when required, and at 4.57m (15') intervals from P.C.R.'s (See Standard Drawing G-10).

3. 6.35mm (1/4") grooves ——— with 6.35 (1/4") radius edges at 152m (5') intervals.

Revision	By	Approved	Date
ORIGINAL		Kercheval	12/75
Add Metric		T. Stanton	03/03

SAN DIEGO REGIONAL STANDARD DRAWING

SIDEWALK JOINT LOCATIONS

RECOMMENDED BY THE SAN DIEGO REGIONAL STANDARDS COMMITTEE

T. Stanton 3/10/2003

Chairperson R.C.E. 19246 Date

DRAWING NUMBER G-9

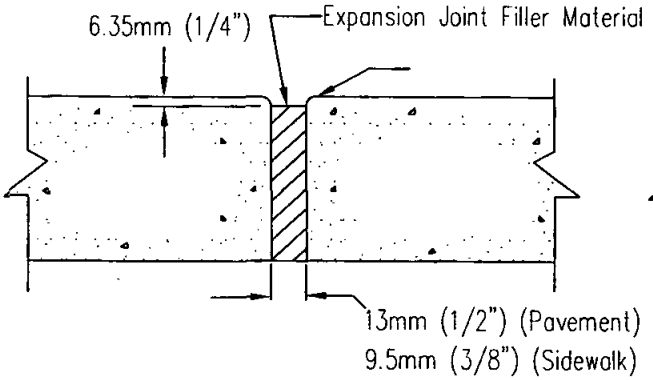

EXPANSION JOINT

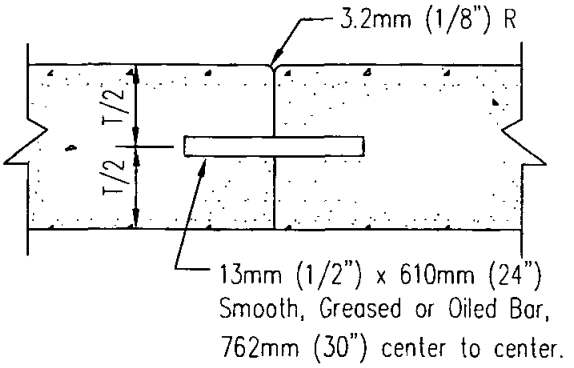

CONTACT JOINT

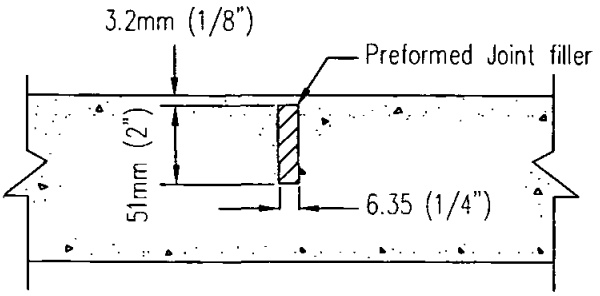

WEAKENED PLANE JOINT
GUTTER AND PAVEMENT

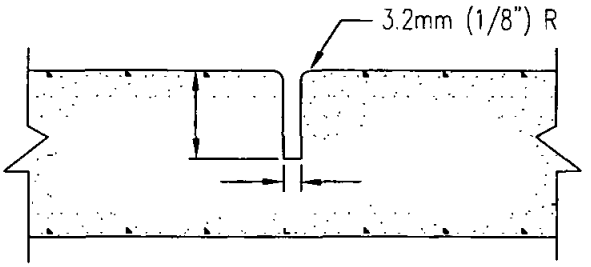

WEAKENED PLANE JOINT
CURB AND SIDEWALK

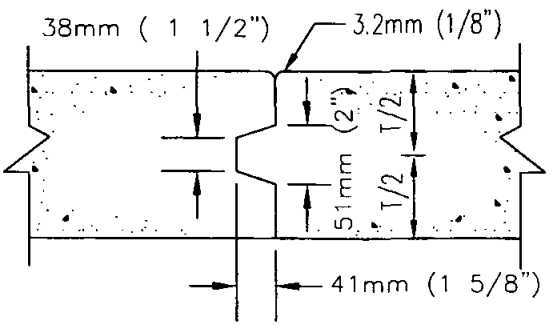

KEYED JOINT

Revision	By	Approved	Date
ORIGINAL		Parkinson	2/95
Add Metric		T. Stanton	03/03

SAN DIEGO REGIONAL STANDARD DRAWING

CONCRETE JOINT DETAILS

RECOMMENDED BY THE SAN DIEGO REGIONAL STANDARDS COMMITTEE

T. Stanton 3/10/2003

Chairperson R.C.E. 19246 Date

DRAWING NUMBER G-10

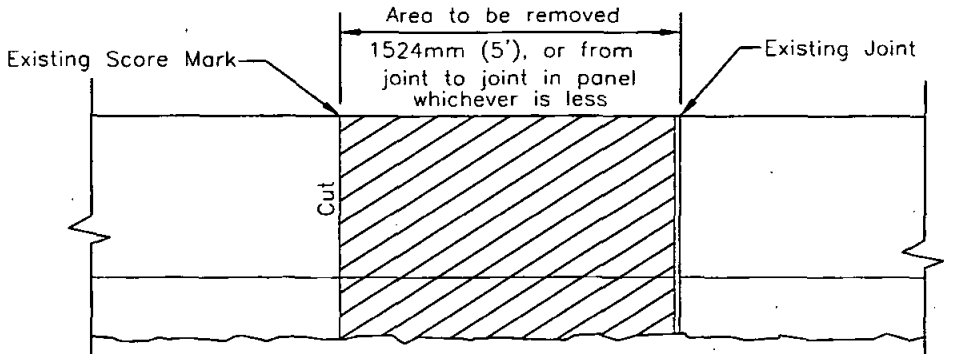

SIDEWALK PLAN

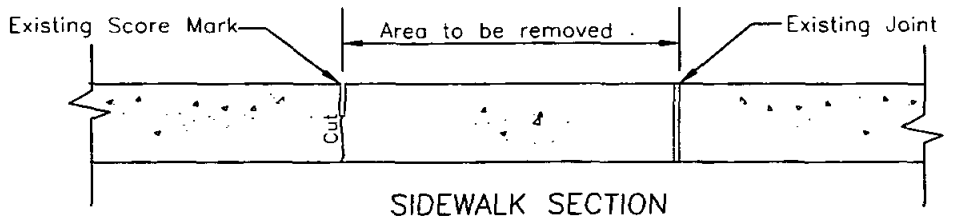

SIDEWALK SECTION

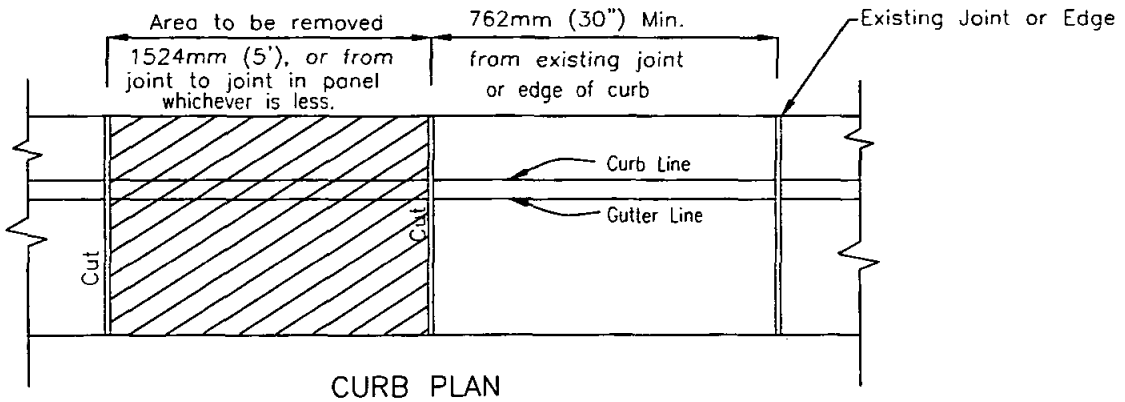

CURB PLAN

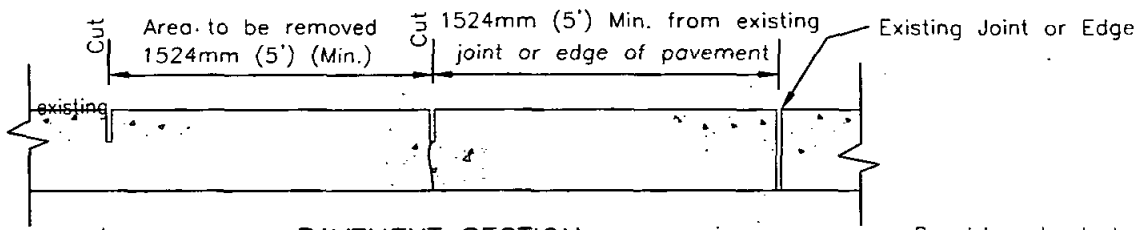

PAVEMENT SECTION

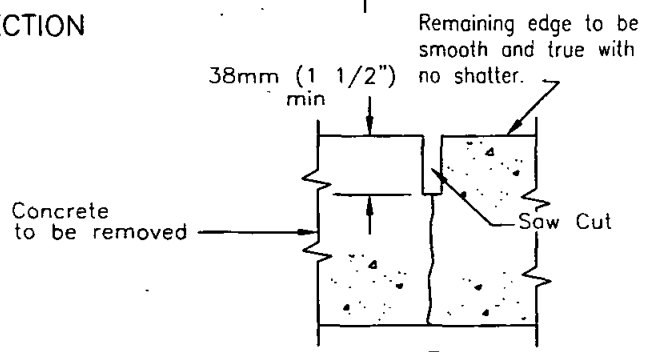

SECTION
Showing Cut

NOTE

When distance from, "Area to be removed", to existing joint, edge or score mark is less than minimum shown, "Area to be removed" shall be extended to joint, edge or score mark.

Revision	By	Approved	Date
ORIGINAL		Kercheval	12/75
Add Metric		T. Stanton	03/03

SAN DIEGO REGIONAL STANDARD DRAWING

CONCRETE CURB, GUTTER, SIDEWALK AND PAVEMENT REMOVAL AND REPLACEMENT

RECOMMENDED BY THE SAN DIEGO REGIONAL STANDARDS COMMITTEE

T. Stanton 3/10/2003

Chairperson R.C.E. 19246 Date

DRAWING NUMBER G-11

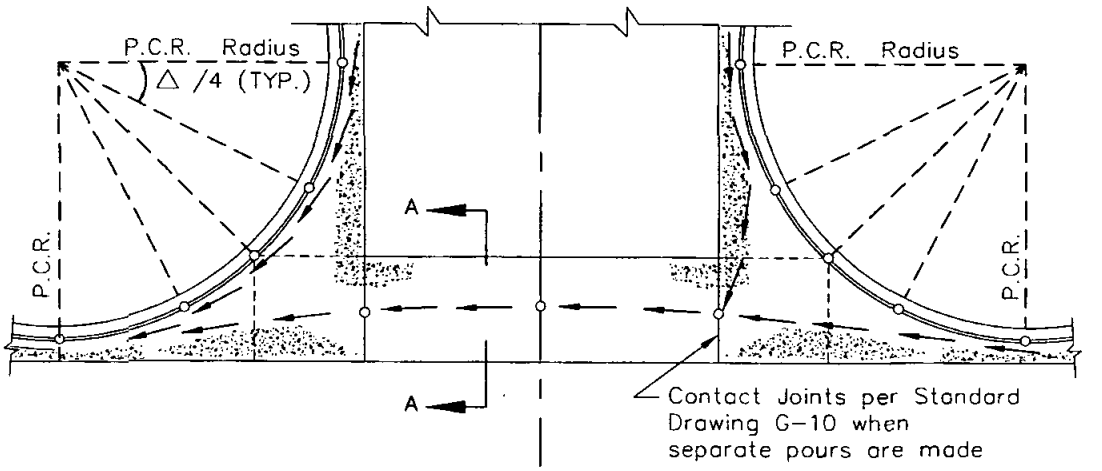

PLAN

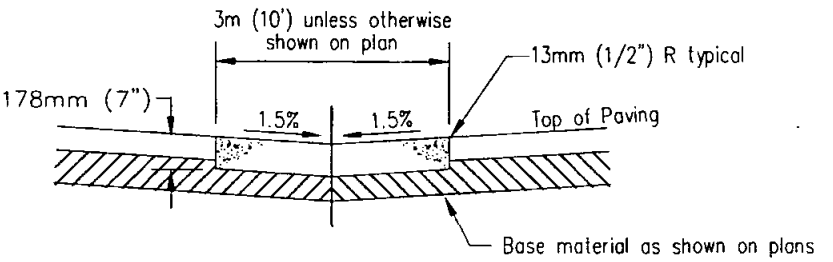

SECTION A–A

NOTES

1. Concrete shall be 332 kg/M3 C 22 Mpa (560 C 3250).
2. - - - - - - - - - = Weakened plane joints.
3. ←— ←— = Typical flowlines.
4. ○ = Elevations to be shown on plans.
5. Return segments to be 178mm (7") Thick.
6. Curb between P.C.R.s. shall be considered as part of cross gutter.
7. In all cases subgrade shall be compacted to 95% min relative compaction to depth of 305mm (12").

LEGEND ON PLANS

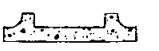

Revision	By	Approved	Date
ORIGINAL		Kercheval	12/75
Add Metric		T. Stanton	03/03

SAN DIEGO REGIONAL STANDARD DRAWING

CROSS GUTTER

RECOMMENDED BY THE SAN DIEGO REGIONAL STANDARDS COMMITTEE

T. Stanton 3/01/2003

Chairperson R.C.E. 19246 Date

DRAWING NUMBER G-12

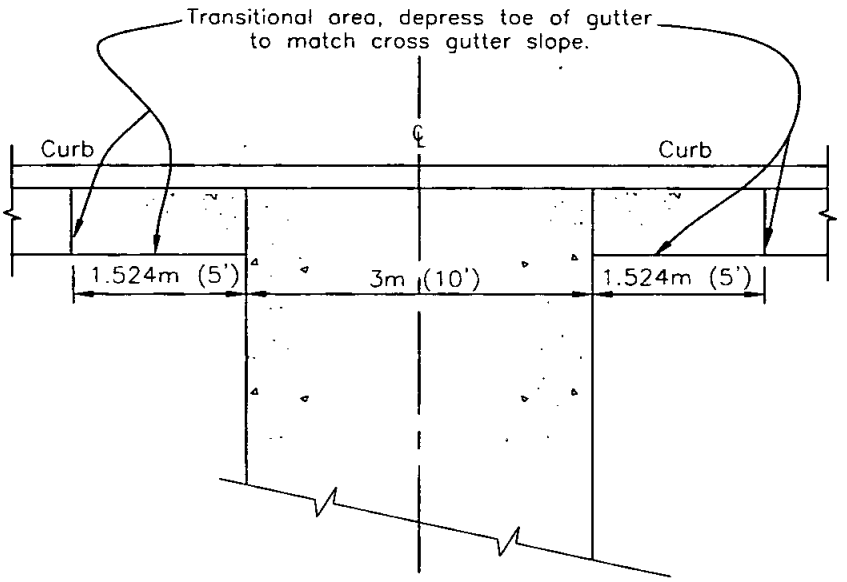

PLAN

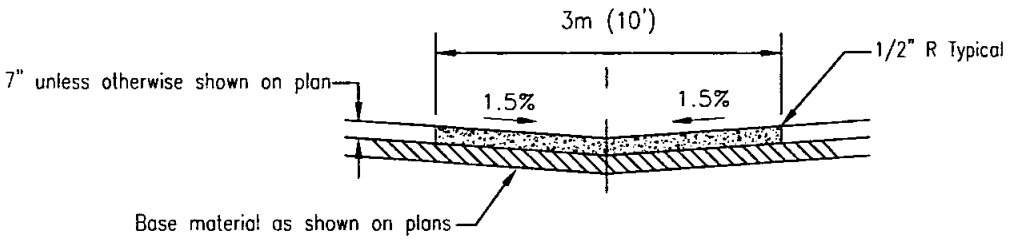

SECTION

NOTES

1. Cross gutter to be constructed where the drainage is carried across street.
2. Minimum allowable cross slope is 0.5%.
3. Concrete shall be 332 kg/M3 C 22 Mpa (560-C-3250).
4. In all cases subgrade shall be compacted to 95% minimum relative compaction to depth of 305mm (12").

LEGEND ON PLANS

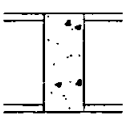

Revision	By	Approved	Date
ORIGINAL		Kercheval	12/75
Add Metric		T. Stanton	03/03

SAN DIEGO REGIONAL STANDARD DRAWING

MID-BLOCK CROSS GUTTER

RECOMMENDED BY THE SAN DIEGO REGIONAL STANDARDS COMMITTEE

T. Stanton 3/10/2003

Chairperson R.C.E. 19246 Date

DRAWING NUMBER G-13

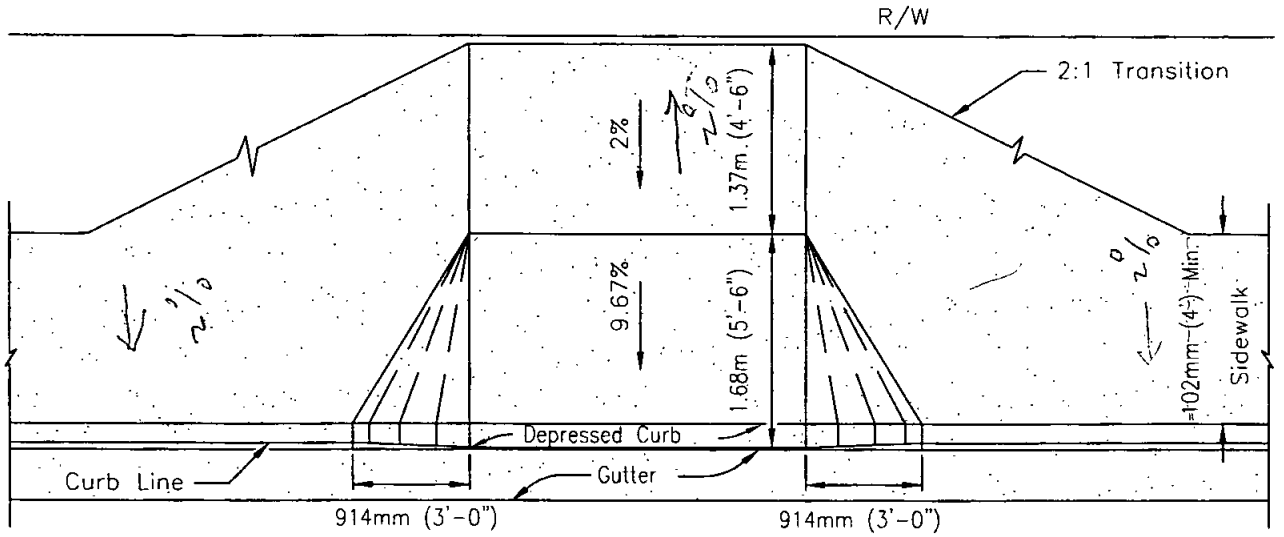

PLAN

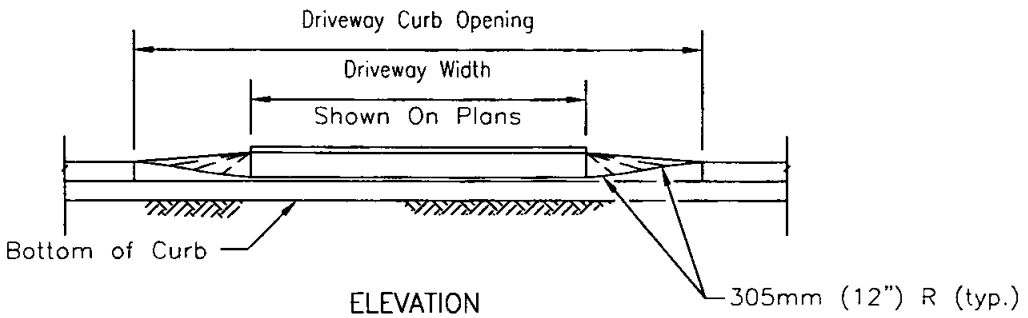

ELEVATION

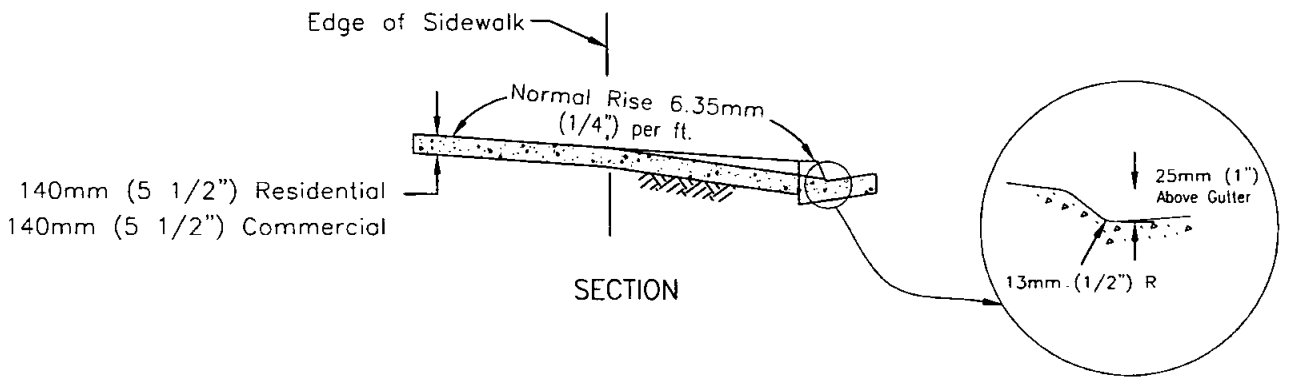

SECTION

NOTES

1. No concrete shall be placed until forms and subgrade are inspected by the Agency.
2. Concrete shall be 332 kg/M3 C 22 Mpa (520-C-2500).
3. See Standard Drawings G-15 and G-16 for width and location requirements
4. Driveway ramp to extend to 3m (10') from curb face or to property line whichever is less. (For commercial driveways only)
5. See Standard Drawings G-2 and G-10 for curb and joint details.

Revision	By	Approved	Date
ORIGINAL		R. Munoz	4/97
Add Metric		T. Stanton	03/03

SAN DIEGO REGIONAL STANDARD DRAWING

CONCRETE DRIVEWAY
(Contiguous Sidewalk)

RECOMMENDED BY THE SAN DIEGO REGIONAL STANDARDS COMMITTEE

T. Stanton 3/01/2003

Chairperson R.C.E. 19246 Date

DRAWING NUMBER G-14A

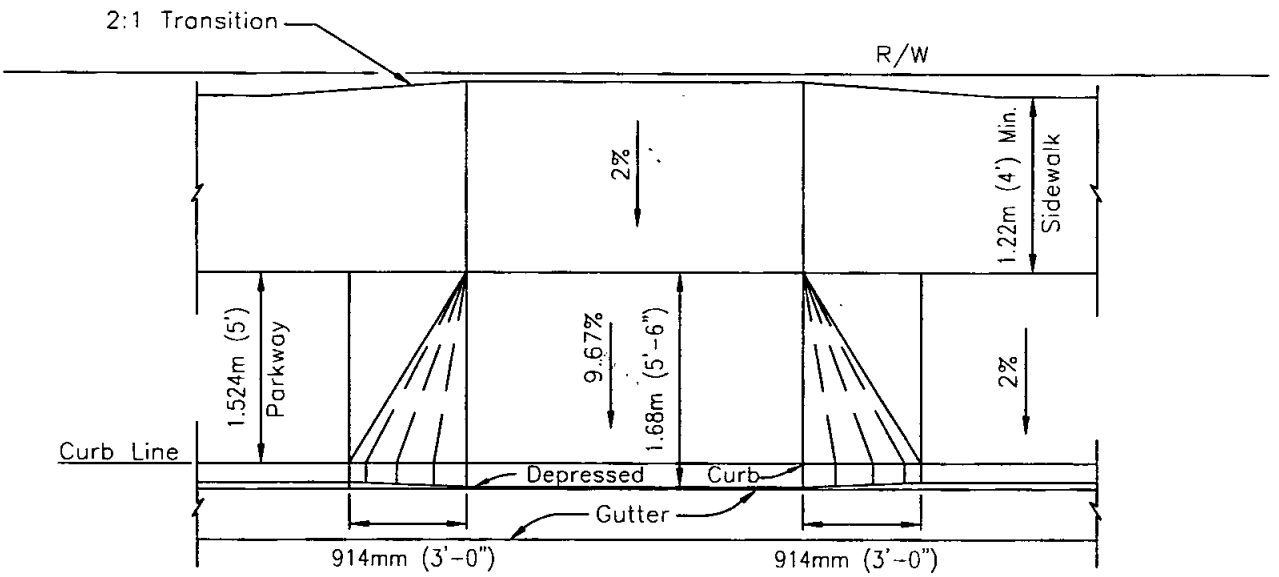

PLAN

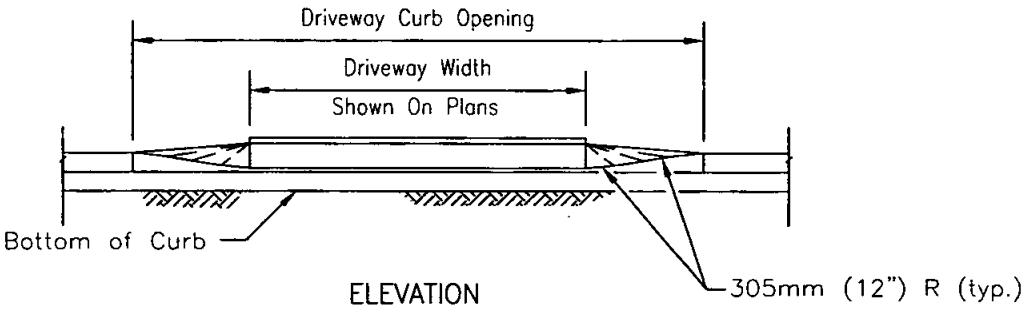

ELEVATION

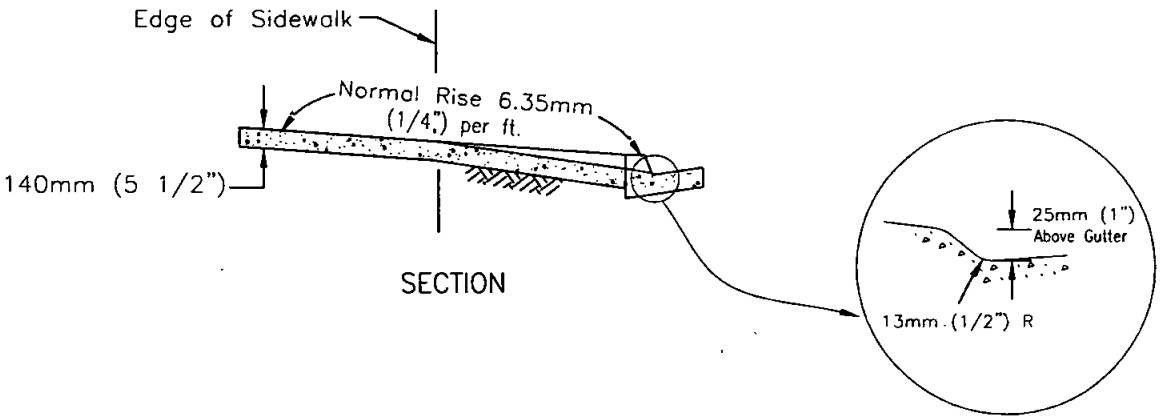

SECTION

NOTES

1. No concrete shall be placed until forms and subgrade are inspected by the Agency.
2. Concrete shall be 308 kg/M3 C 17 Mpa (520-C-2500).
3. See Standard Drawings G-15 and G-16 for width and location requirements
4. Driveway ramp to extend to 3m (10') from curb face or to property line whichever is less. (For commercial driveways only)
5. See Standard Drawings G-2 and G-10 for curb and joint details.

Revision	By	Approved	Date	SAN DIEGO REGIONAL STANDARD DRAWING	RECOMMENDED BY THE SAN DIEGO REGIONAL STANDARDS COMMITTEE
ORIGINAL		R. Munoz	4/97		
Add Metric		T. Stanton	03/03	CONCRETE DRIVEWAY (Non-contiguous Sidewalk)	T. Stanton 3/01/2003 Chairperson R.C.E. 19246 Date
					DRAWING NUMBER G-14B

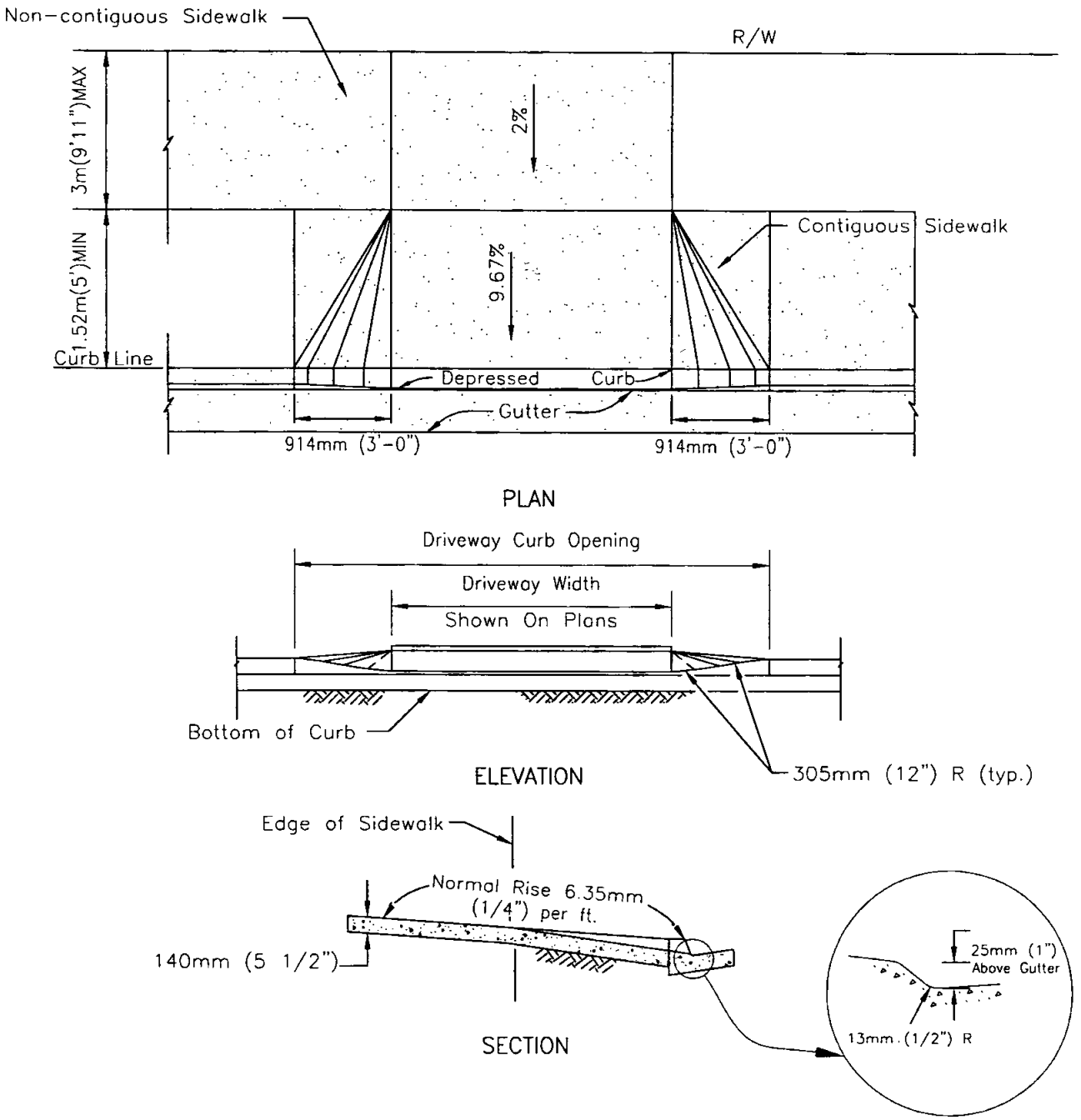

NOTES

1. No concrete shall be placed until forms and subgrade are inspected by the Agency.
2. Concrete shall be 308 kg/M3 C 17 Mpa (520-C-2500).
3. See Standard Drawings G-15 and G-16 for width and location requirements
4. Driveway ramp to extend to 3m (10') from curb face or to property line whichever is less. (For commercial driveways only)
5. See Standard Drawings G-2 and G-10 for curb and joint details.

Revision	By	Approved	Date
ORIGINAL		R. Munoz	4/97
Add Metric		T. Stanton	03/03

SAN DIEGO REGIONAL STANDARD DRAWING

RESIDENTIAL
CONCRETE DRIVEWAY
(PARKWAY LESS THAN 10' IN DEPTH)

RECOMMENDED BY THE SAN DIEGO REGIONAL STANDARDS COMMITTEE

T. Stanton 3/01/2003

Chairperson R.C.E. 19246 Date

DRAWING NUMBER G-14C

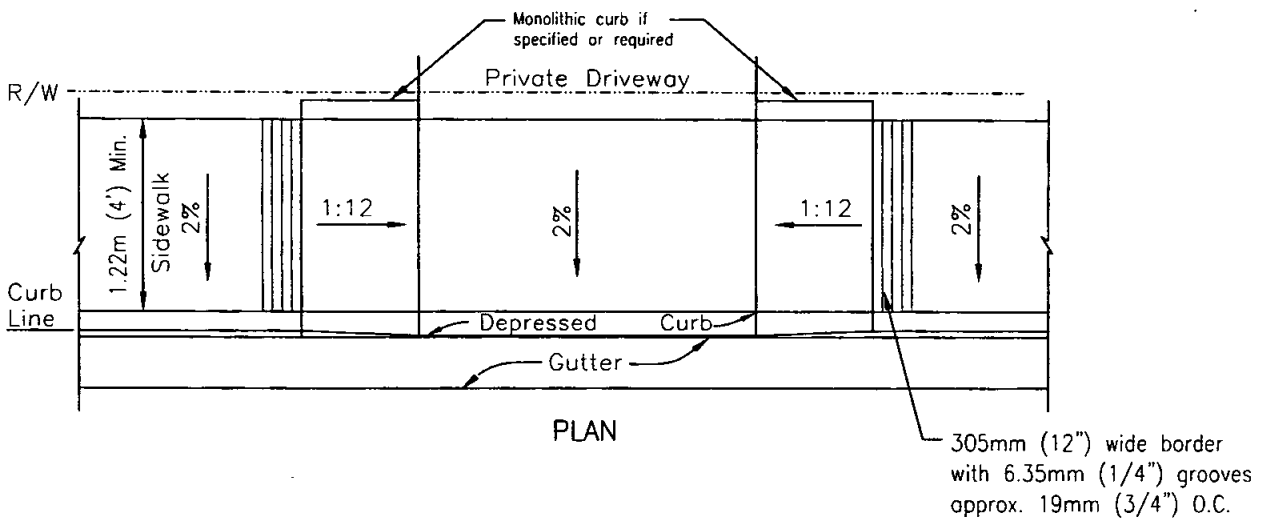

PLAN

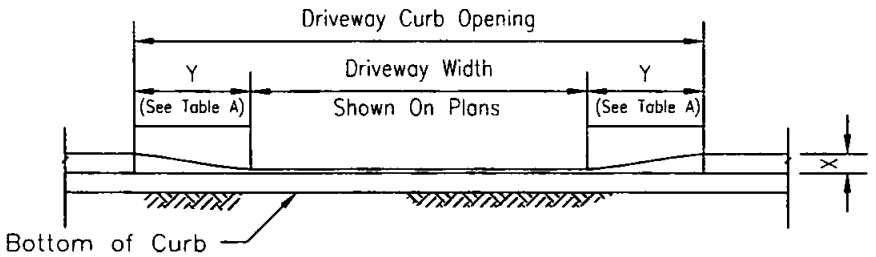

ELEVATION

TABLE A	
X	Y
CURB HIEGHT	RAMP LENGTH
25mm (1")	152mm (0-6")
51mm (2")	457mm (1'-6")
76mm (3")	762mm (2'-6")
102mm (4")	1.10m (3'-6")
127mm (5")	1.40m (4'-6")
152mm (6")	1.70m (5'-6")
178mm (7")	2.0m (6'-6")
203mm (8")	23m (7'-6")

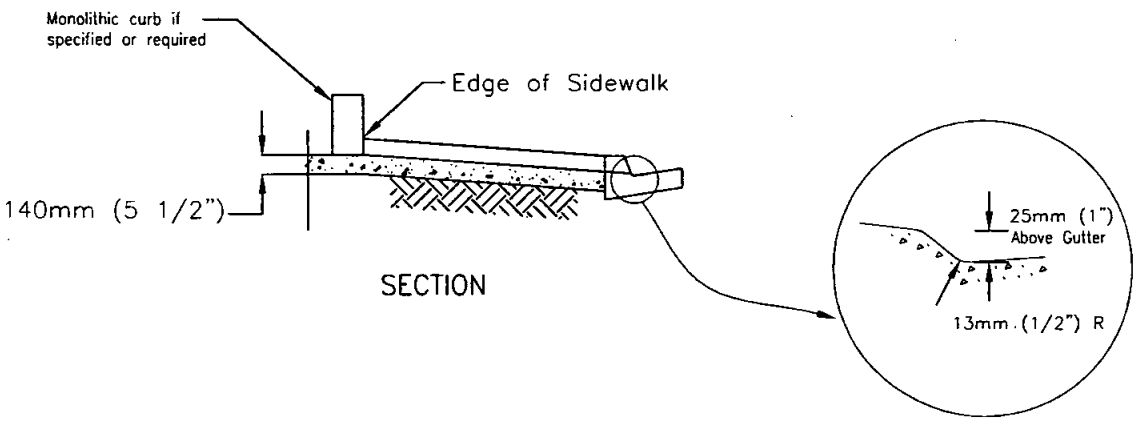

SECTION

NOTES

1. No concrete shall be placed until forms and subgrade are inspected by the Agency.
2. Concrete shall be 308 kg/M3 C 17 Mpa (520-C-2500).
3. See Standard Drawings G-15 and G-16 for width and location requirements
4. See Standard Drawings G-2 and G-10 for curb and joint details.

Revision	By	Approved	Date
ORIGINAL	HH	T. Stanton	02/03
Add Metric		T. Stanton	03/03

SAN DIEGO REGIONAL STANDARD DRAWING

Concrete Driveway
(for Confined Right-of-Way)

RECOMMENDED BY THE SAN DIEGO REGIONAL STANDARDS COMMITTEE

T. Stanton 3/10/2003

Chairperson R.C.E. 19246 Date

DRAWING NUMBER G-14D

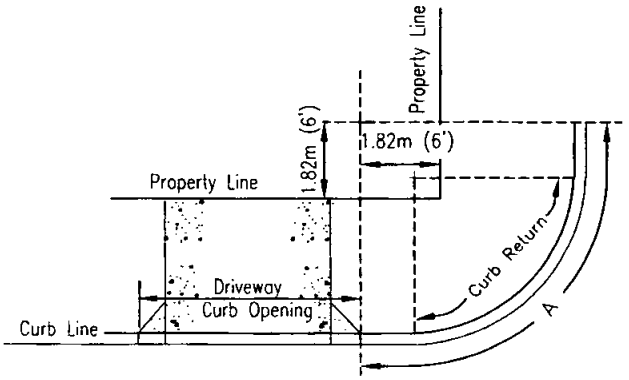

REQUIREMENT 1

No portion of any curb opening shall be permitted within 6' of the intersection of the prolonged property lines and the curb as shown by arc A.

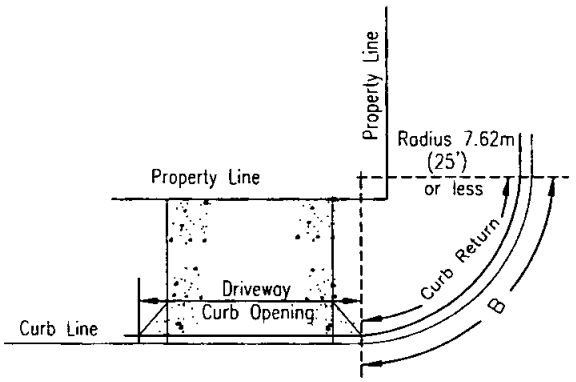

REQUIREMENT 2

No portion of any curb opening shall be permitted in the curb return where the radius of curb is 7.62m (25') or less, as shown by arc B.

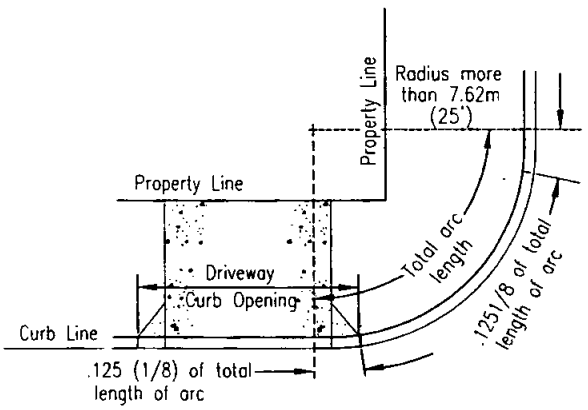

REQUIREMENT 3

On all curb returns where the radius is more than 25', curb openings may encroach upon each end of the return a distance equal to 12 1/2% or .125 (1/8) of the total length of the arc on the curb return, thus leaving at least 75% of the length of arc on the return face free from driveway encroachment, provided Requirement 1 is met.

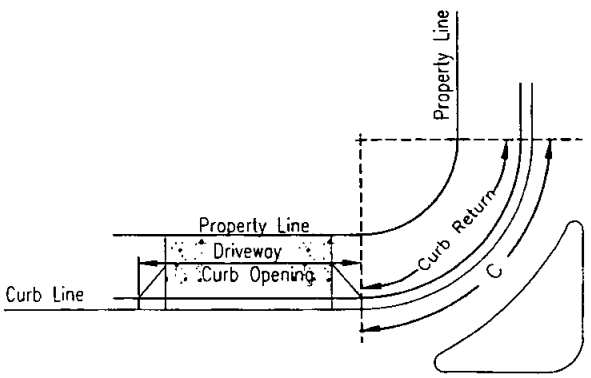

REQUIREMENT 4

No portion of any curb opening shall be permitted in the curb return where a separate turning movement is provided, as shown by arc C.

Revision	By	Approved	Date
ORIGINAL		Kercheval	12/75
Add Metric		T. Stanton	03/03

SAN DIEGO REGIONAL STANDARD DRAWING

DRIVEWAY LOCATION – ADJACENT TO CURB RETURNS AND STREET LINES

RECOMMENDED BY THE SAN DIEGO REGIONAL STANDARDS COMMITTEE

T. Stanton 3/01/2003

Chairperson R.C.E. 19246 Date

DRAWING NUMBER G-15

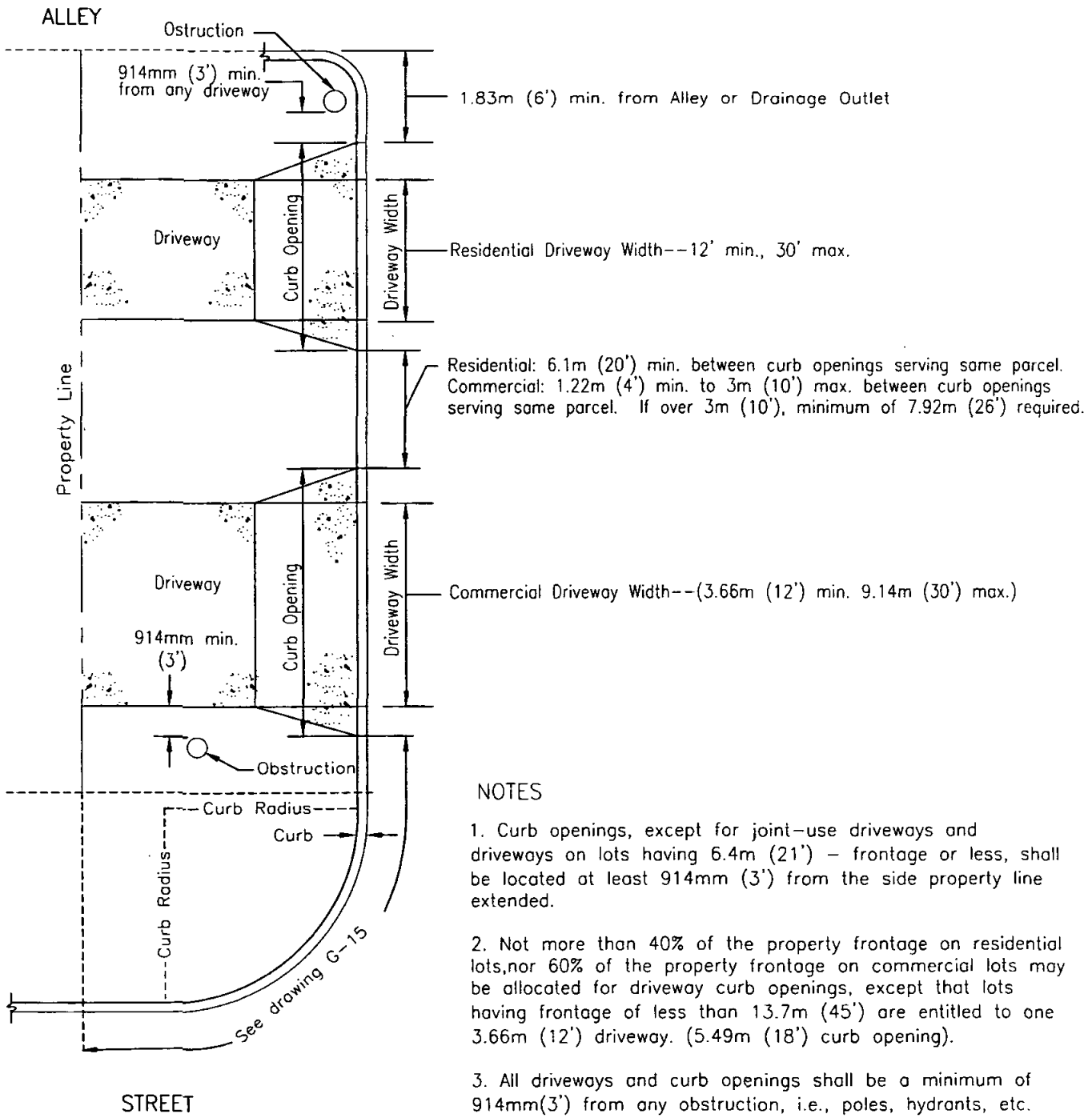

NOTES

1. Curb openings, except for joint-use driveways and driveways on lots having 6.4m (21') - frontage or less, shall be located at least 914mm (3') from the side property line extended.

2. Not more than 40% of the property frontage on residential lots,nor 60% of the property frontage on commercial lots may be allocated for driveway curb openings, except that lots having frontage of less than 13.7m (45') are entitled to one 3.66m (12') driveway. (5.49m (18') curb opening).

3. All driveways and curb openings shall be a minimum of 914mm(3') from any obstruction, i.e., poles, hydrants, etc.

4. No portion of any driveway shall be allowed across a line extending normal to the roadway from the front corner of the property, except that joint-use driveways may be permitted in special instances where written approval of both property owners is filed with the Agency.

Revision	By	Approved	Date
ORIGINAL		Kercheval	12/75
Add Metric		T. Stanton	03/03

SAN DIEGO REGIONAL STANDARD DRAWING

DRIVEWAY LOCATION AND WIDTH REQUIREMENTS

RECOMMENDED BY THE SAN DIEGO REGIONAL STANDARDS COMMITTEE

T. Stanton 3/10/2003

Chairperson R.C.E. 19246 Date

DRAWING NUMBER G-16

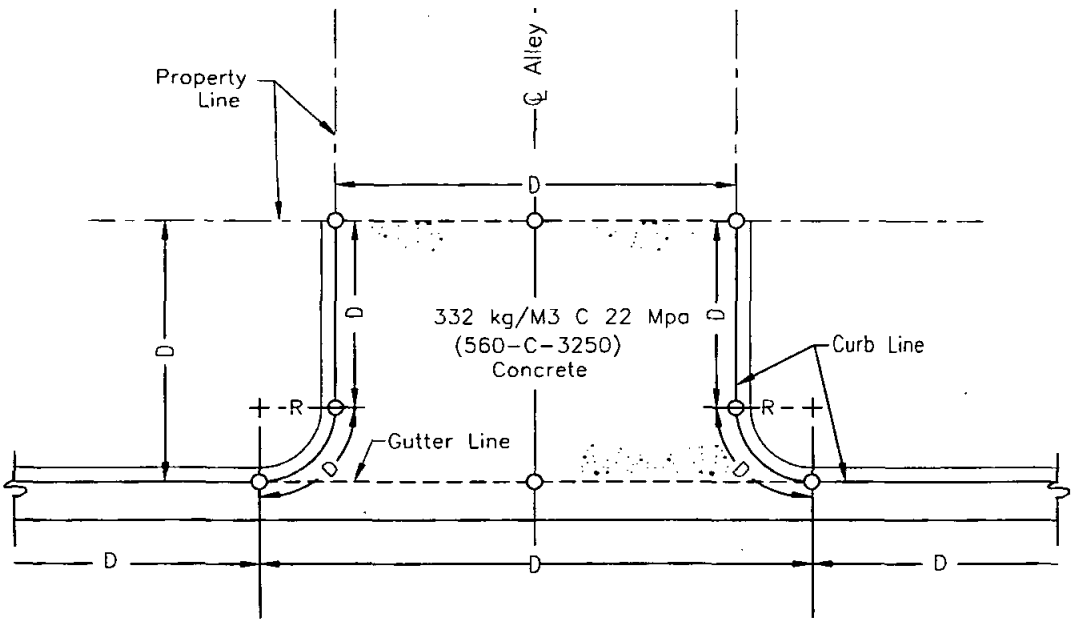

PLAN

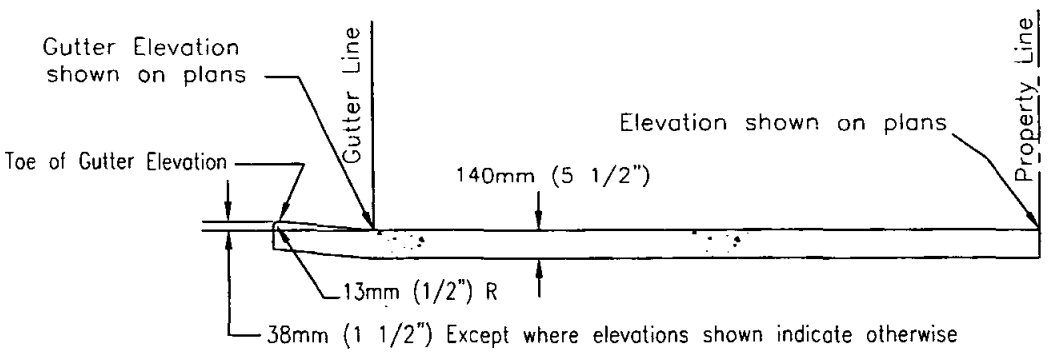

℄ SECTION

NOTES

1. Sidewalk ramps shall be installed as required by Agency.
2. D= distance shown on plans.
3. R= radius shown on plans (914mm (3') minimum).
4. O = elevations shown on plans (top of curb, and gutter elev.)
5. --- = 13mm (1/2") expansion joints.

LEGEND ON PLANS

Revision	By	Approved	Date
ORIGINAL		Kercheval	12/75
Add Metric		T. Stanton	03/03

SAN DIEGO REGIONAL STANDARD DRAWING

ALLEY APRON

RECOMMENDED BY THE SAN DIEGO REGIONAL STANDARDS COMMITTEE

T. Stanton 3/10/2003

Chairperson R.C.E. 19246 Date

DRAWING NUMBER G-17

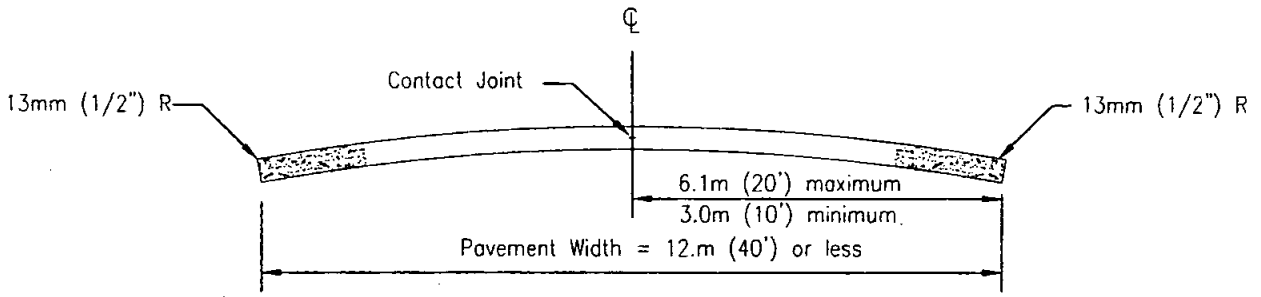

SECTION

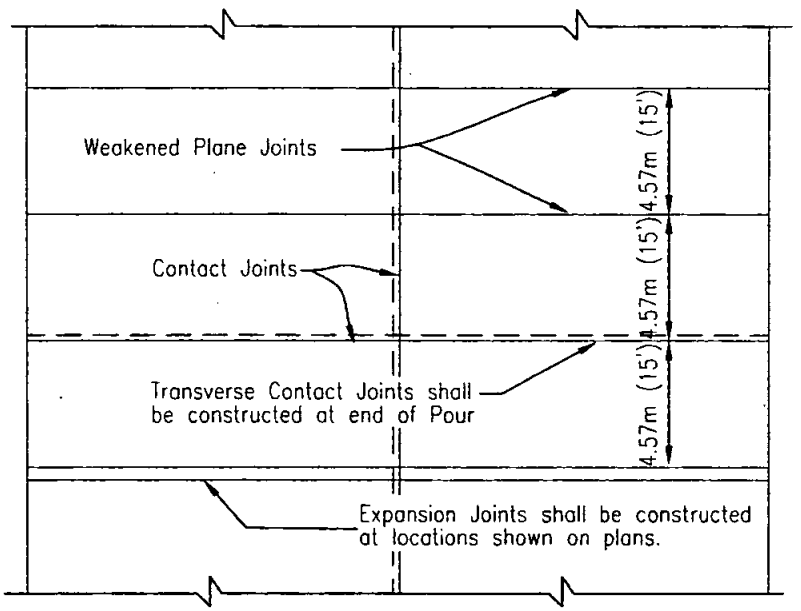

PLAN

NOTES

1. Concrete shall be 332 kg/M3 C 22 Mpa (560-C-3250).
2. See Standard Drawing G-10 for joint details.
3. Adjust 4.57m (15') interval between Transverse Joints to match adjacent existing improvements.

Revision	By	Approved	Date
ORIGINAL		Kercheval	12/75
Add Metric		T. Stanton	03/03

SAN DIEGO REGIONAL STANDARD DRAWING

CONCRETE PAVEMENT
WIDTH 40' OR LESS

RECOMMENDED BY THE SAN DIEGO REGIONAL STANDARDS COMMITTEE

T. Stanton 3/01/2003

Chairperson R.C.E. 19246 Date

DRAWING NUMBER G-18

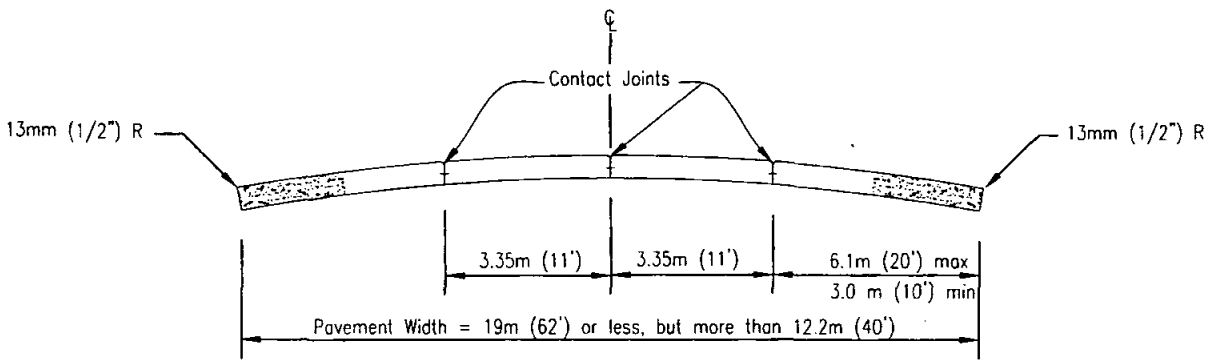

SECTION

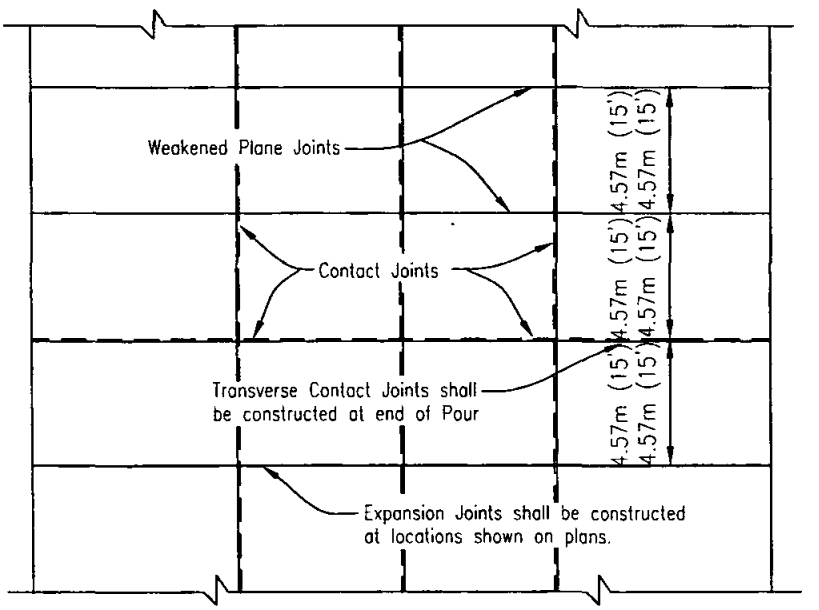

PLAN

NOTES

1. Concrete shall be 332 kg/M3 C 22 Mpa (560-C-3250).
2. See Standard Drawing G-10 for joint details.
3. Adjust 4.57m (15') interval between Transverse Joints to *match adjacent existing improvements.*

Revision	By	Approved	Date
ORIGINAL		Kercheval	12/75
Add Metric		T. Stanton	03/03

SAN DIEGO REGIONAL STANDARD DRAWING

CONCRETE PAVEMENT
WIDTH 40' TO 62'

RECOMMENDED BY THE SAN DIEGO REGIONAL STANDARDS COMMITTEE

T. Stanton 3/10/2003

Chairperson R.C.E. 19246 Date

DRAWING NUMBER G-19

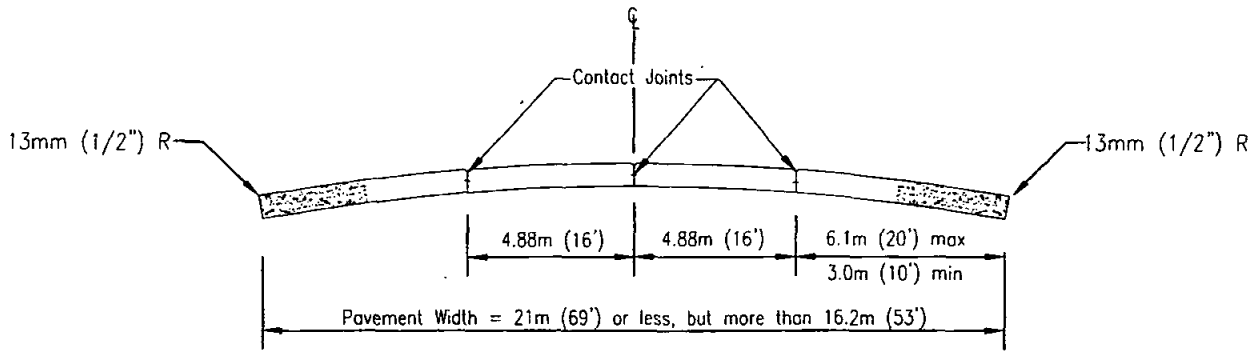

SECTION

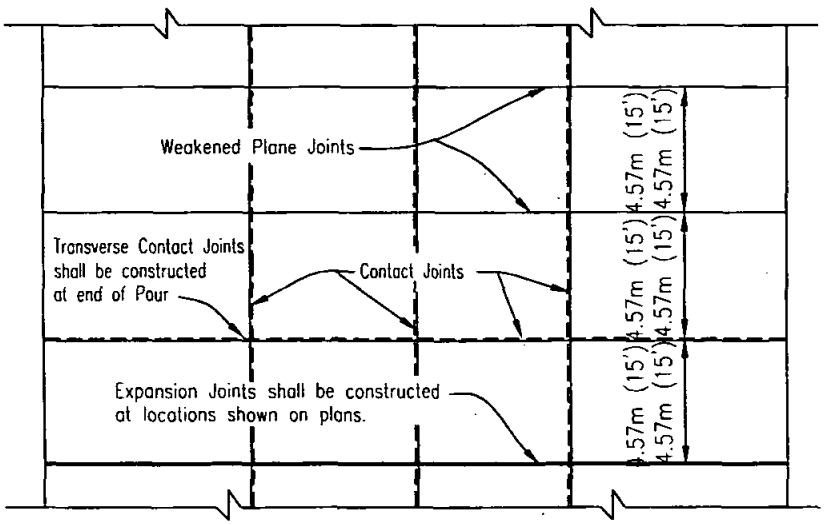

PLAN

NOTES

1. Concrete shall be 332 kg/M3 C 22 Mpa (560-C-3250).
2. See Standard Drawing G-10 for joint details.
3. Adjust 4.57m (15') interval between Transverse Joints to match adjacent existing improvements.

Revision	By	Approved	Date
ORIGINAL		Kercheval	12/75
Add Metric		T. Stanton	03/03

SAN DIEGO REGIONAL STANDARD DRAWING

CONCRETE PAVEMENT, ALLEY SECTION
WIDTH 53' TO 69'

RECOMMENDED BY THE SAN DIEGO REGIONAL STANDARDS COMMITTEE

T. Stanton 3/10/2003

Chairperson R.C.E. 19246 Date

DRAWING NUMBER G-20

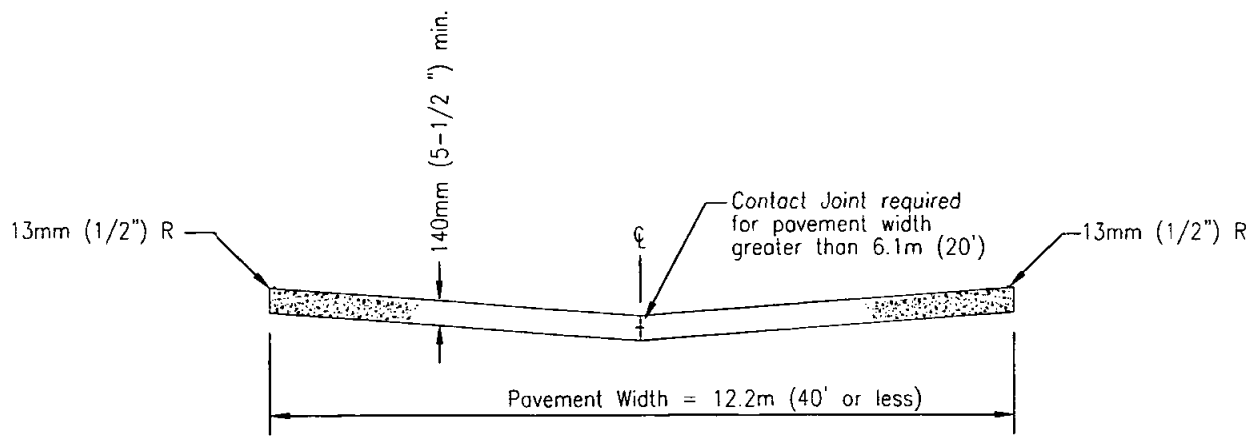

SECTION

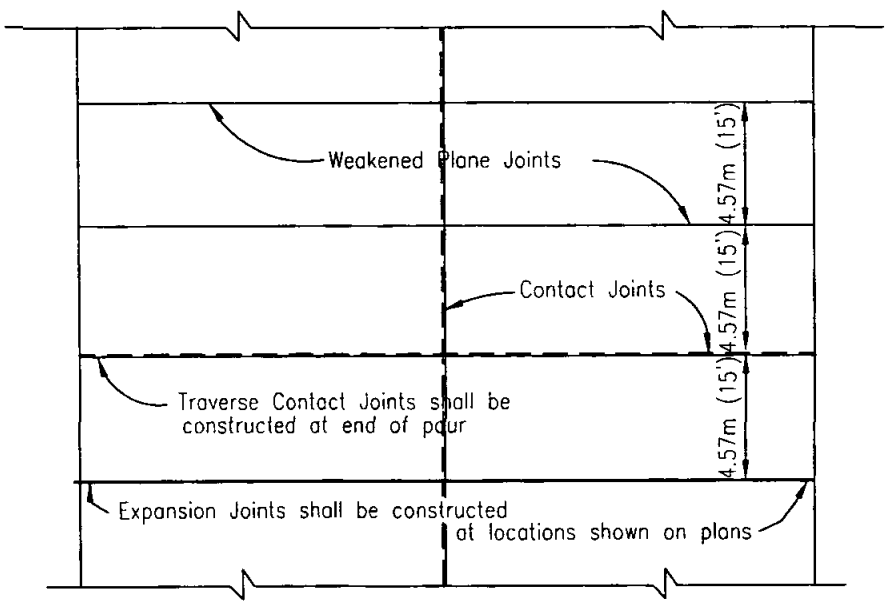

PLAN

NOTES

1. Concrete shall be 332 kg/M3 C 22 Mpa (560-C-3250).
2. See Standard Drawing G-10 for joint details.
3. Adjust 4.57m (15') interval between Transverse Joints to match adjacent existing improvements.

Revision	By	Approved	Date
ORIGINAL		Kercheval	12/75
Add Metric		T. Stanton	03/03

SAN DIEGO REGIONAL STANDARD DRAWING

CONCRETE PAVEMENT
ALLEY SECTION, WIDTH 40' OR LESS

RECOMMENDED BY THE SAN DIEGO REGIONAL STANDARDS COMMITTEE

T. Stanton 3/01/2003

Chairperson R.C.E. 19246 Date

DRAWING NUMBER G-21

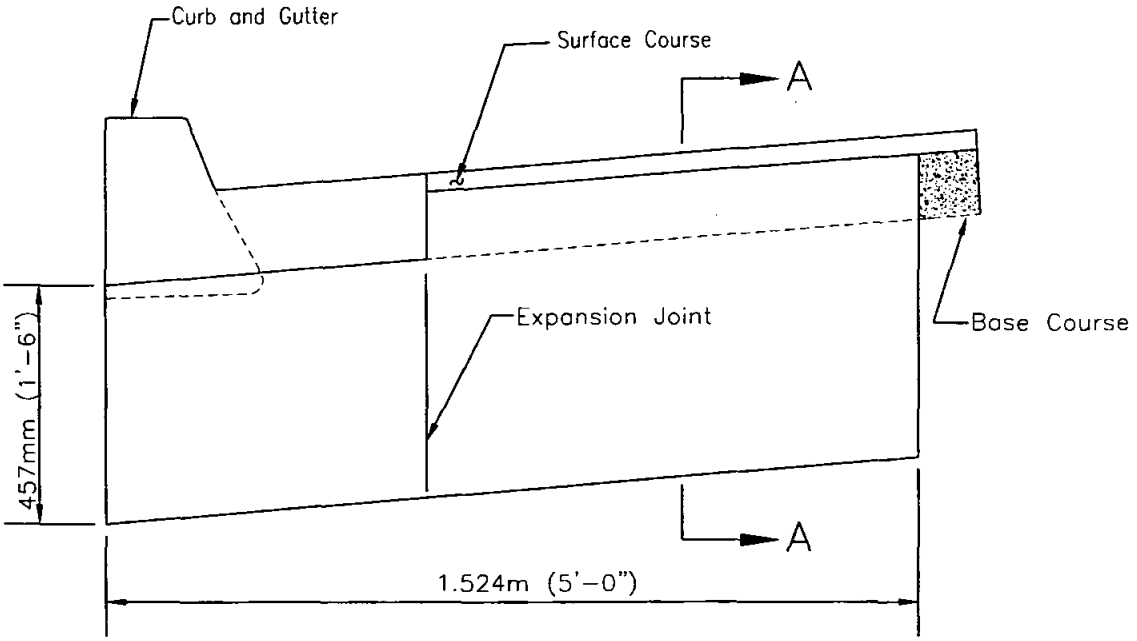

ELEVATION

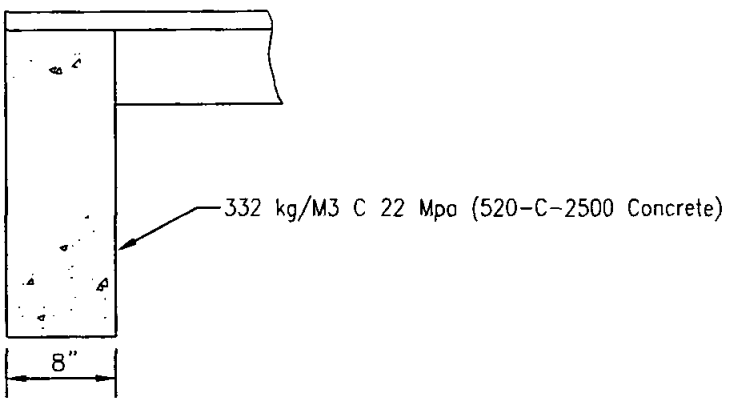

SECTION A-A

LEGEND ON PLANS

Revision	By	Approved	Date
ORIGINAL		Kercheval	12/75
Add Metric		T. Stanton	03/03

SAN DIEGO REGIONAL STANDARD DRAWING

CUTOFF WALL
AT END OF PAVEMENT

RECOMMENDED BY THE SAN DIEGO REGIONAL STANDARDS COMMITTEE

T. Stanton 3/10/2003

Chairperson R.C.E. 19246 Date

DRAWING NUMBER G-22

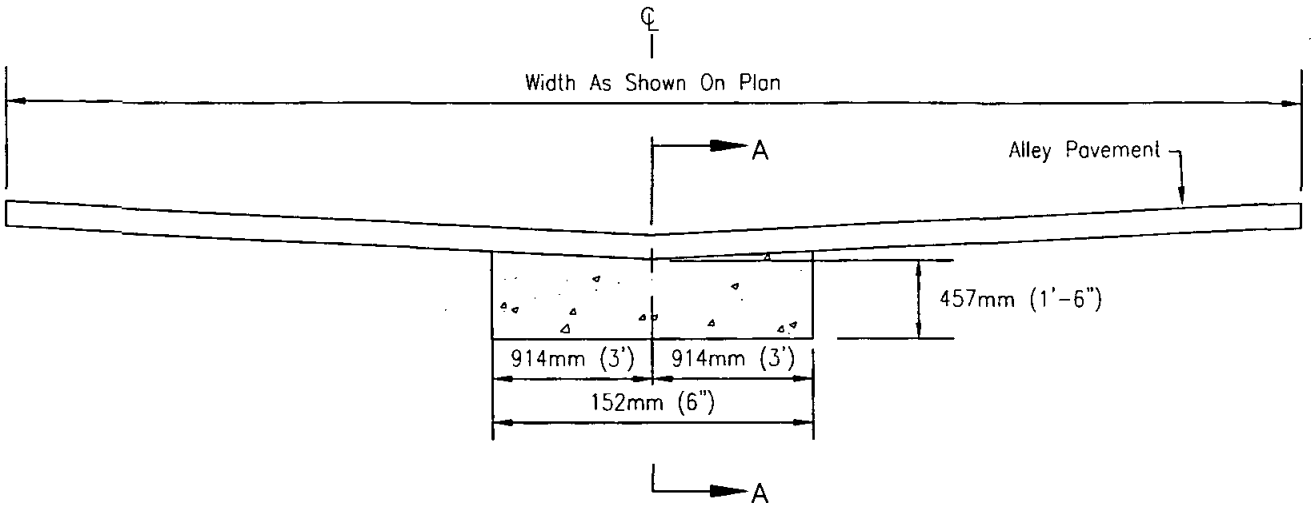

ELEVATION

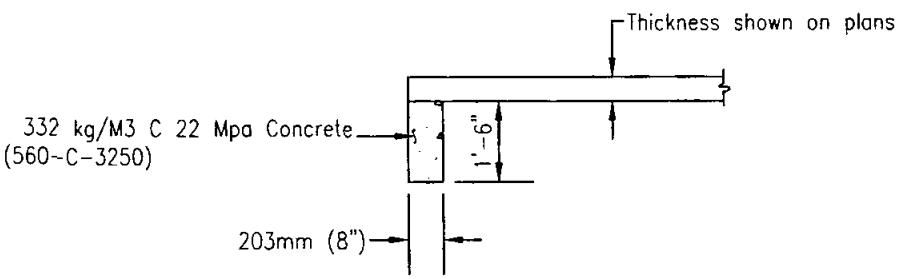

SECTION A–A

LEGEND ON PLANS

Revision	By	Approved	Date
ORIGINAL		Kercheval	12/75
Add Metric		T. Stanton	03/03

SAN DIEGO REGIONAL STANDARD DRAWING

CUTOFF WALL
AT END OF ALLEY PAVEMENT

RECOMMENDED BY THE SAN DIEGO REGIONAL STANDARDS COMMITTEE

T. Stanton 3/01/2003

Chairperson R.C.E. 19246 Date

DRAWING NUMBER G-23

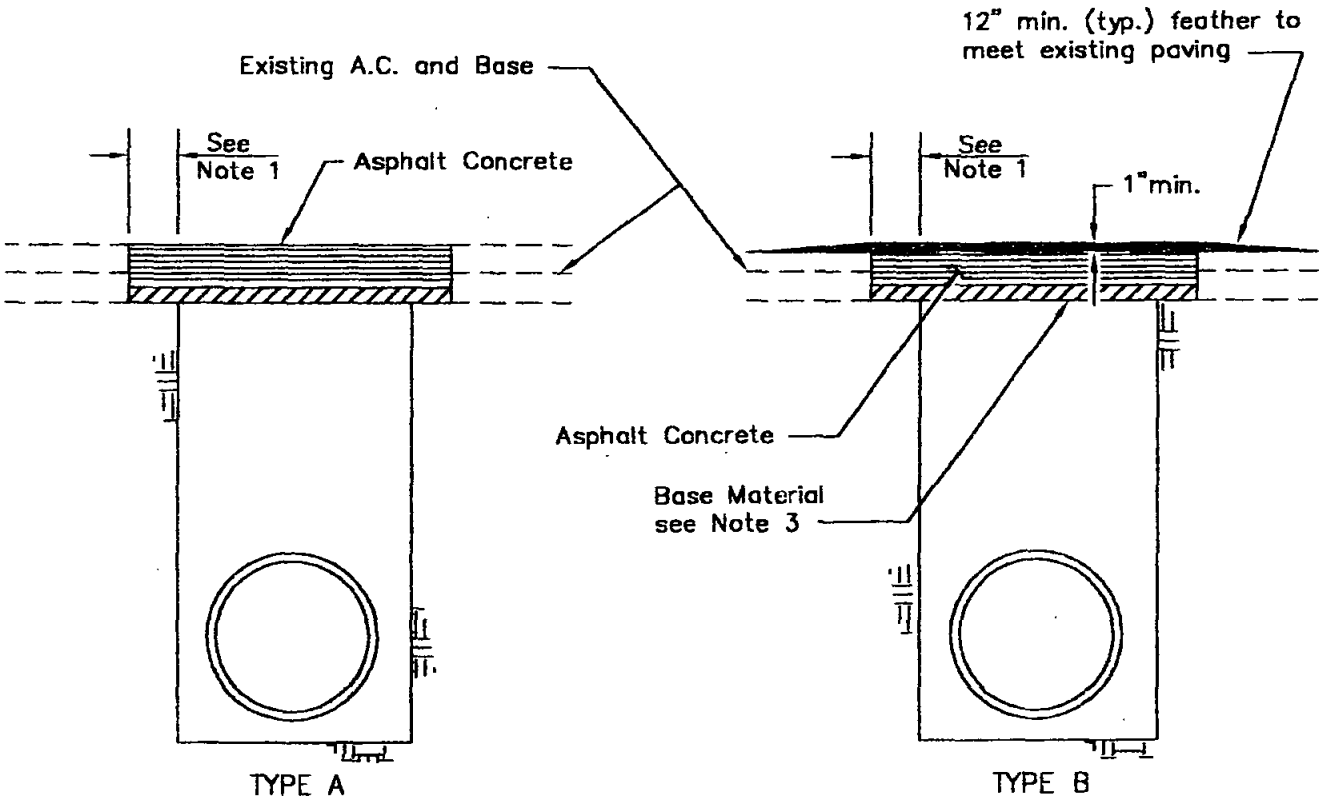

NOTES

1. Trench edges to be cut a minimum of 6" wider than trench for trenches 3' wide or less, and 12" wider for trenches over 3' wide.
2. Existing A.C. shall be cut and removed in such a manner so as not to tear, bulge or displace adjacent pavement. Edges shall be clean and vertical. All cuts shall be parallel or perpendicular to street centerline, when practical.
3. Base material shall be replaced to depth of existing base. A.C. may be substituted for base material.
4. A tack coat of asphaltic emulsion or paving asphalt shall be applied to existing A.C. or P.C.C. contact surfaces, prior to resurfacing.
5. Asphalt Concrete Resurfacing:
   a) Minimum total thickness shall be one inch greater than existing A.C.
   b) A.C. shall be hot plant mix.
   c) Finish course for Type B resurfacing shall be laid down using a spreader box.
6. All A.C. resurfacing shall be seal coated with an emulsified asphalt and covered with sand. Chip sealing shall be applied as required by Agency.
7. Type B shall not be used on lateral crossings.
8. Sloughing of trench under pavement shall be cause for requiring additional pavement and base.

Revision	By	Approved	Date	SAN DIEGO REGIONAL STANDARD DRAWING	RECOMMENDED BY THE SAN DIEGO REGIONAL STANDARDS COMMITTEE
ORIGINAL		Parkinson	2/95	TRENCH RESURFACING TYPES A & B	Chairperson R.C.E. 19246 Date
					DRAWING NUMBER G-24

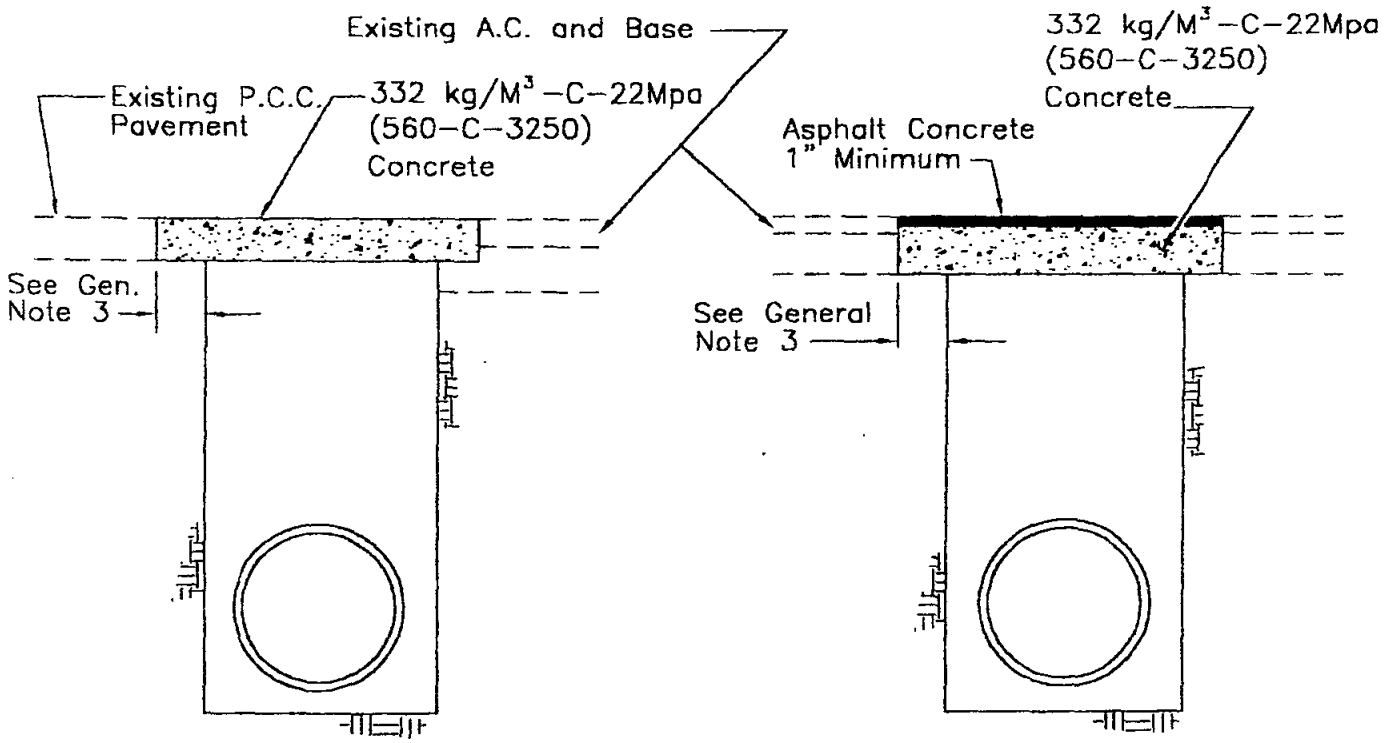

TYPE C

TYPE D

GENERAL NOTES

1. Existing A.C. shall be cut and removed in such a manner so as not to tear, bulge or displace adjacent pavement. Edges shall be clean and vertical. All cuts shall be parallel or perpendicular to street centerline, when practical.
2. Sloughing of trench under pavement shall be cause for requiring additional pavement and base.
3. Trench edges to be cut a minimum of 152mm(6") wider than trench for 914mm (3') wide or less, and 305mm (12") wider for trenches over 914mm (3') wide.

NOTES TYPE–C

1. Concrete shall be colored black where required to match existing pavement, method to be specified by Agency.
2. Minimum concrete thickness:
   Alleys and local residential street ----------127mm (5 inches)
   Major streets and highway ----------178mm (7 inches)
   Trench resurfacing in P.C.C. pavement shall have the above minimum thickness or match the existing concrete thickness plus one inch, whichever is greater.

NOTES TYPE–D

1. A.C. shall be hot plant mix.
2. A tack coat of asphaltic emulsion or paving asphalt shall be applied to the existing A.C. at all contact surfaces and to portland cement concrete prior to placing new A.C.
3. A.C. resurfacing shall be seal coated with an emulsified asphalt and covered with sand. Chip sealing shall be applied as required by Agency.

Revision	By	Approved	Date	SAN DIEGO REGIONAL STANDARD DRAWING	RECOMMENDED BY THE SAN DIEGO REGIONAL STANDARDS COMMITTEE
ORIGINAL		Parkinson	2/95		
Add Metric		T. Stanton	03/03	TRENCH RESURFACING TYPES C & D	3/01/2003 Chairperson R.C.E. 19246 Date
					DRAWING NUMBER G-25

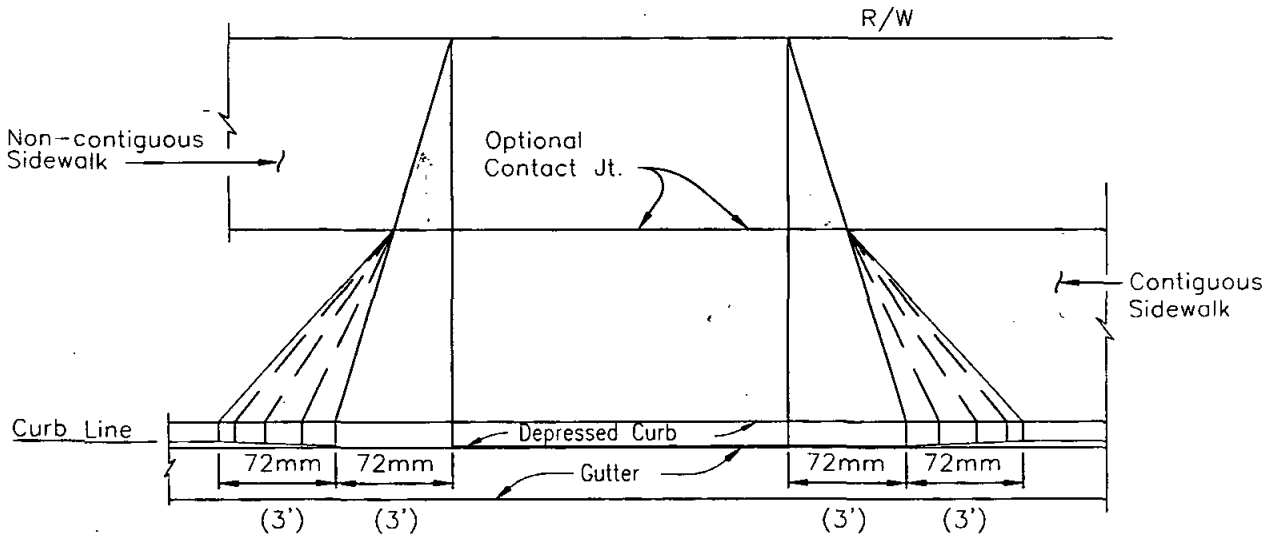

PLAN

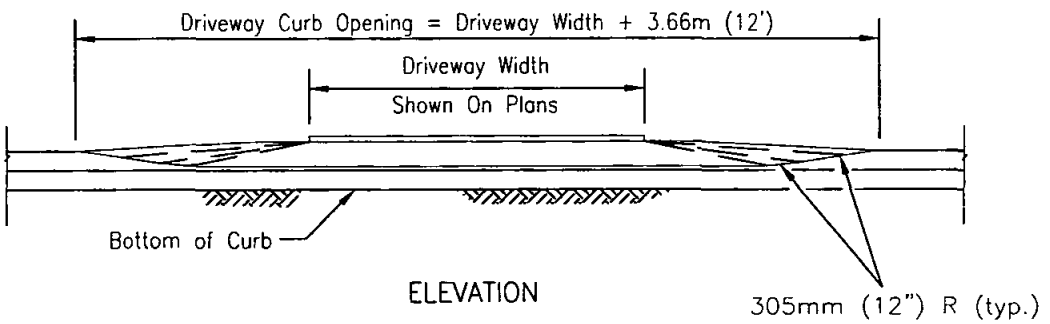

ELEVATION

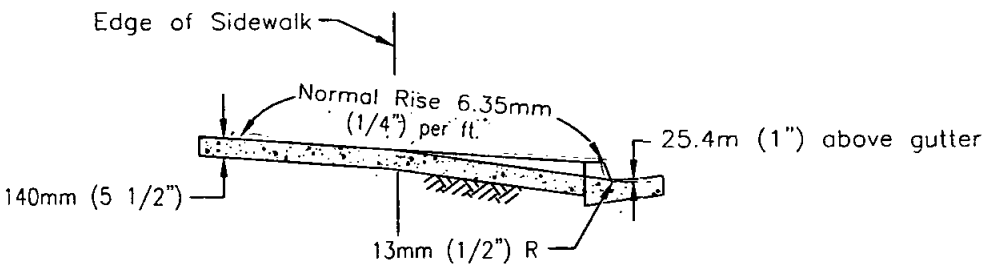

SECTION

NOTES

1. No concrete shall be be placed until forms and subgrade are inspected by the Agency.
2. Concrete shall be 308 kg/M3 C 17 Mpa (520-C-2500.)
3. See Standard Drawings G-15 and G-16 for width and location requirements
4. Driveway ramp to extend to 3m (10') from curb face or to property line whichever is less. (For commercial driveways only)
5. See Standard Drawings G-2 and G-10 for curb and joint details.

Revision	By	Approved	Date	SAN DIEGO REGIONAL STANDARD DRAWING	RECOMMENDED BY THE SAN DIEGO REGIONAL STANDARDS COMMITTEE
ORIGINAL		H. Hecht	10/82		
Add Metric		T. Stanton	03/03	CONCRETE DRIVEWAY COMMERCIAL ALTERNATE	T. Stanton 3/01/2003
					Chairperson R.C.E. 19246 Date
					DRAWING NUMBER G-26

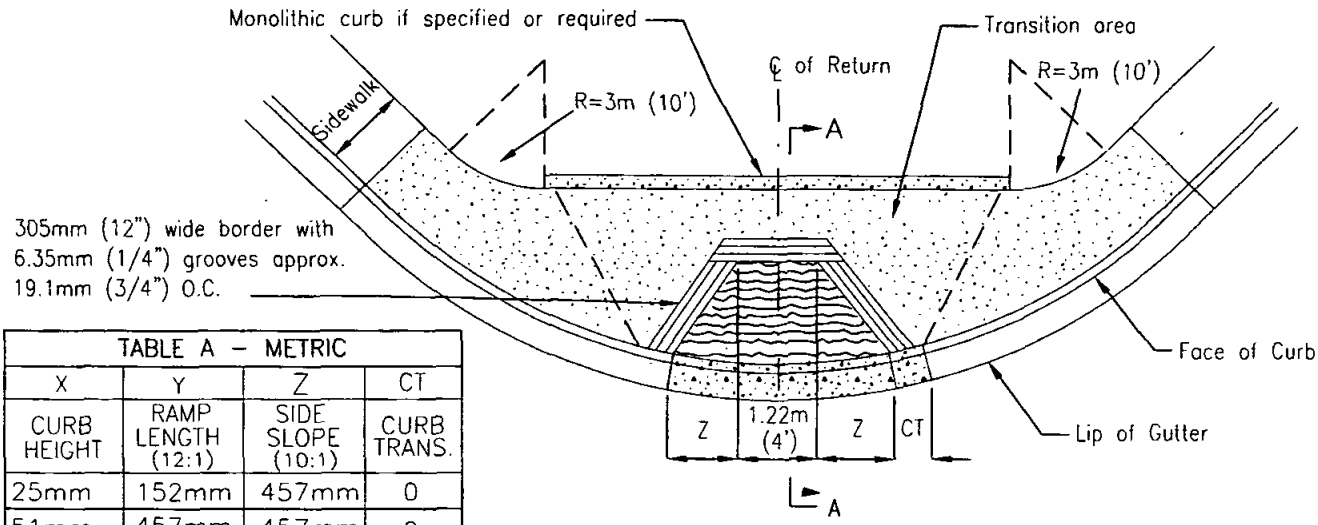

PLAN – TYPE A

TABLE A – METRIC			
X	Y	Z	CT
CURB HEIGHT	RAMP LENGTH (12:1)	SIDE SLOPE (10:1)	CURB TRANS.
25mm	152mm	457mm	0
51mm	457mm	457mm	0
76mm	762mm	635mm	0
102mm	1.07m	889mm	0
127mm	1.37m	1.14m	0
152mm	1.68m	1.4m	0
178mm	1.98m	1.4m	305mm
203mm	2.29m	1.4m	610mm

TABLE A – U.S.			
X	Y	Z	CT
CURB HEIGHT	RAMP LENGTH (12:1)	SIDE SLOPE (10:1)	CURB TRANS.
1"	0'–6"	1'–6"	0'–0"
2"	1'–6"	1'–6"	0'–0"
3"	2'–6"	2'–1"	0'–0"
4"	3'–6"	2'–11"	0'–0"
5"	4'–6"	3'–9"	0'–0"
6"	5'–6"	4'–7"	0'–0"
7"	6'–6"	4'–7"	1'–0"
8"	7'–6"	4'–7"	2'–0"

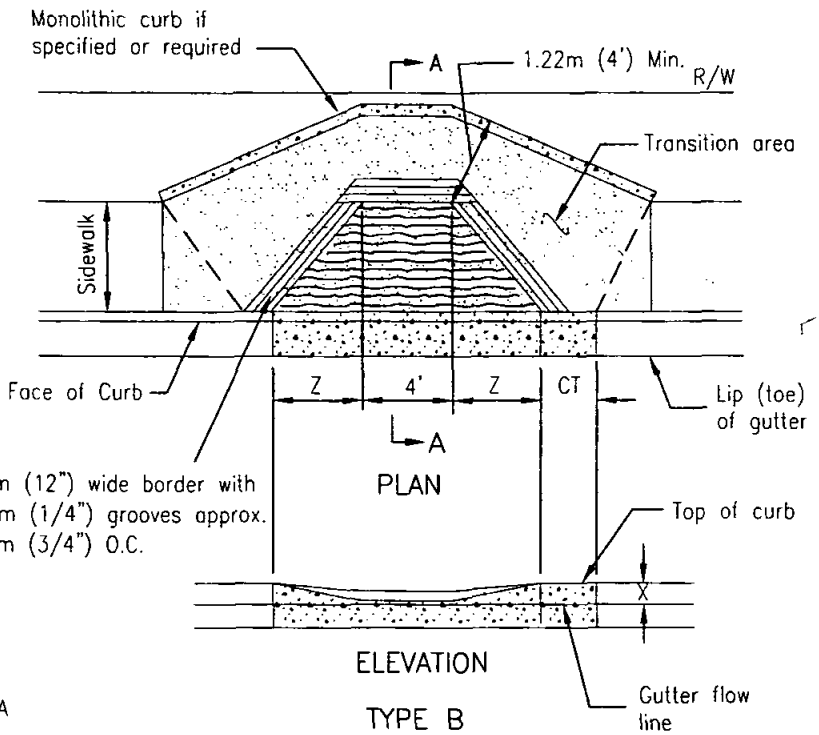

PLAN

ELEVATION

TYPE B

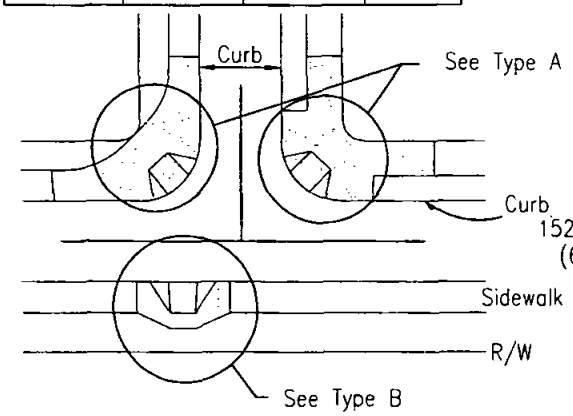

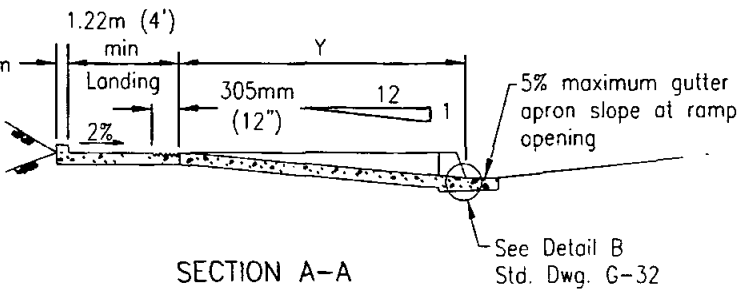

SECTION A–A

NOTE

See Standard Drawing G-32 for general notes.

Revision	By	Approved	Date
ORIGINAL		M.Bahmanian	4/86
Add Metric		T. Stanton	03/03

SAN DIEGO REGIONAL STANDARD DRAWING

CURB RAMP – TYPES A and B
(New Construction)

RECOMMENDED BY THE SAN DIEGO REGIONAL STANDARDS COMMITTEE

3/01/2003

Chairperson R.C.E. 19246 Date

DRAWING NUMBER G-27

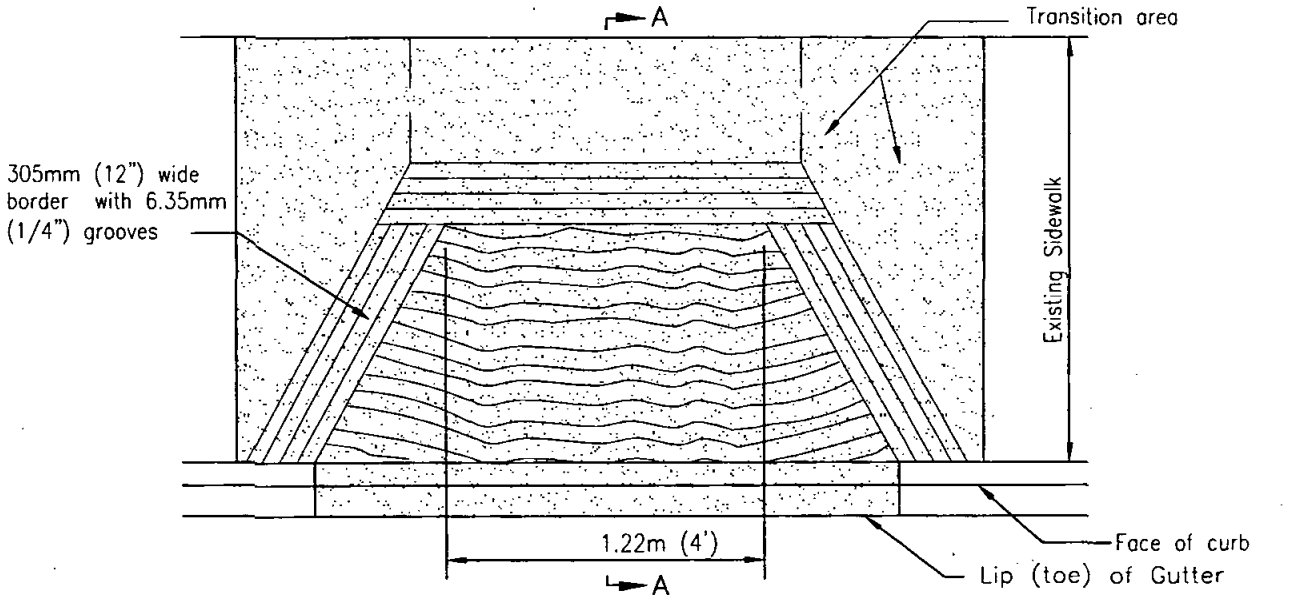

PLAN (TYPE B-1)

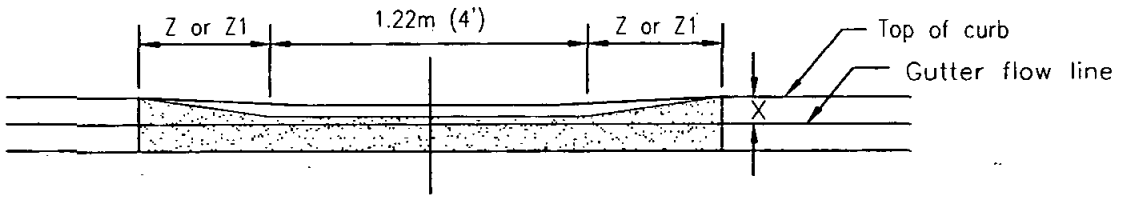

ELEVATION

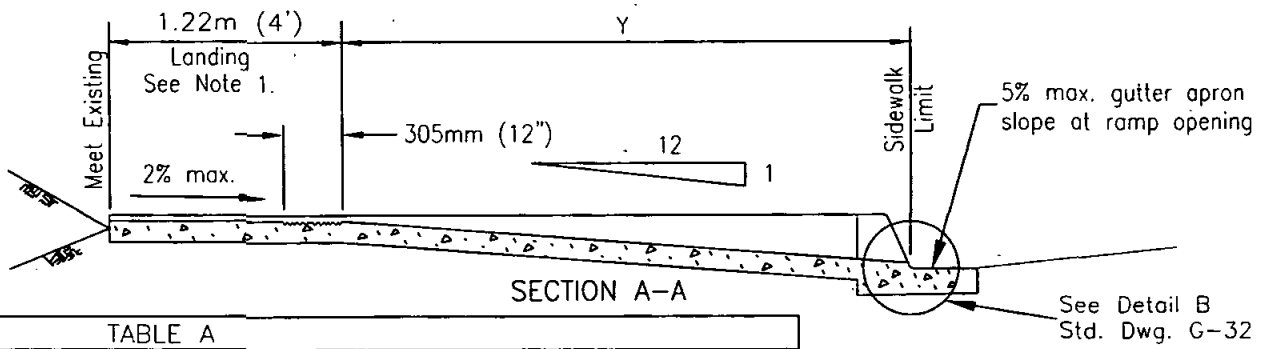

SECTION A-A

TABLE A

X	Y	Z	Z1
CURB HEIGHT	RAMP LENGTH (12:1)	SIDE SLOPE (10:1)	SIDE SLOPE (12:1)
1" *	152mm (0'-6")	457mm (1'-6")	457mm (1'-6")
2"	457mm (1'-6")	457mm (1'-6")	457mm (1'-6")
3"	762mm (2'-6")	635mm (2'-1")	762mm (2'-6")
4"	1.1m (3'-6")	889mm (2'-11")	1.1m (3'-6")
5"	1.34m (4'-6")	1.14m (3'-9")	1.37m (4'-6")
6"	1.68m (5'-6")	1.4m (4'-7")	1.68m (5'-6")
7"	1.98m (6'-6")	1.65m (5'-5")	1.98m (6'-6")
8"	2.29m (7'-6")	1.91m (6'-3")	2.29m (7'-6")

NOTES

1. If inadequate R/W exists to provide a 4' landing, a landing width less than 1.22m (4') but at least 3' is acceptable if the side slopes are revised to 12:1 per side slope Z1 in table A.
2. See Standard Drawing G-32 for general notes.
3. Type A-1 is a designation for ramp at curb return.
4. Type B-1 is a designation for ramp at straight curb. (Shown above).

*5. Delete 305mm (12") wide border when X=1"

Revision	By	Approved	Date
ORIGINAL		G.Parkinson	2/95
Add Metric		T. Stanton	03/03

SAN DIEGO REGIONAL STANDARD DRAWING

CURB RAMP - TYPES A-1 and B-1
(For Existing Sidewalk)

RECOMMENDED BY THE SAN DIEGO REGIONAL STANDARDS COMMITTEE

T. Stanton 3/01/2003

Chairperson R.C.E. 19246 Date

DRAWING NUMBER G-28

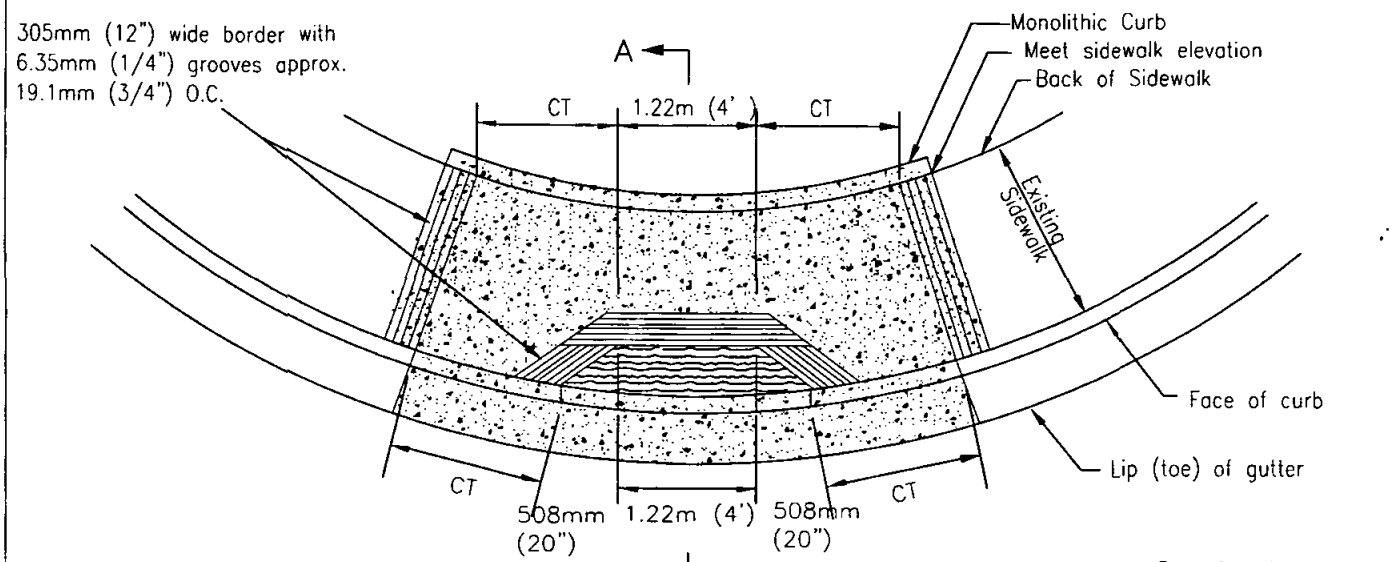

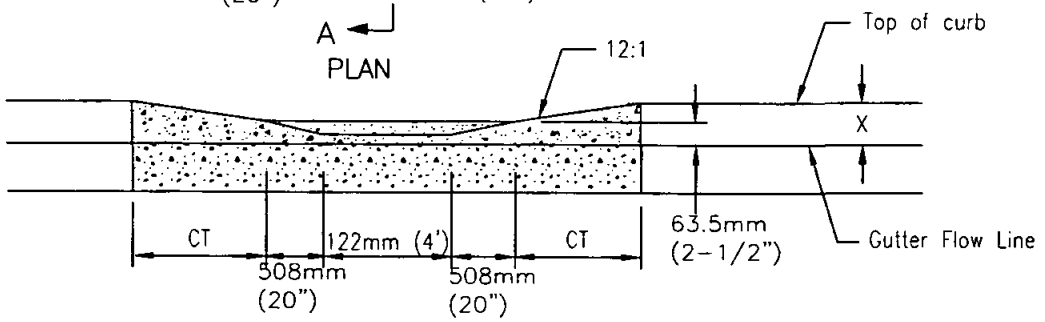

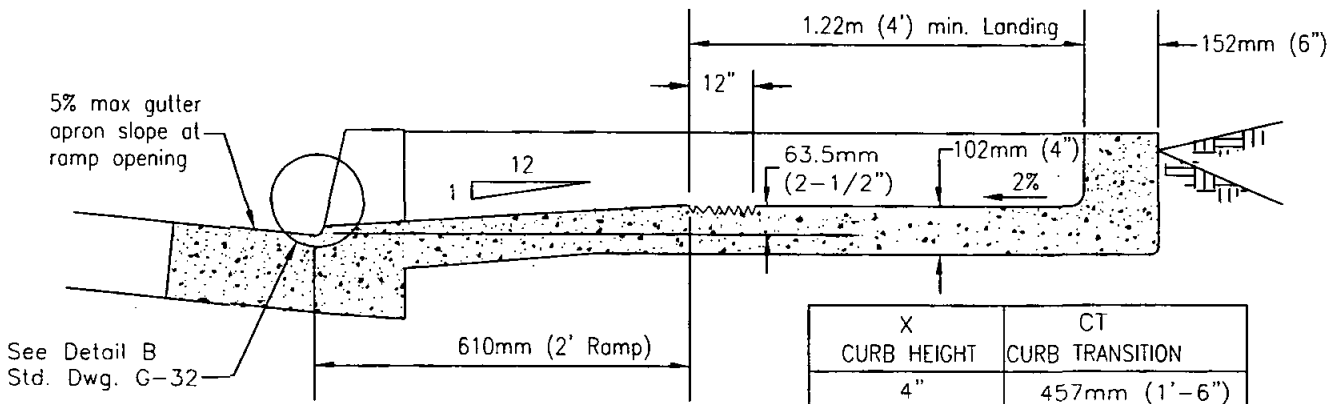

X CURB HEIGHT	CT CURB TRANSITION
4"	457mm (1'-6")
5"	762mm (2'-6")
6"	1.10m (3'-6")
7"	1.37m (4'-6")
8"	1.68m (5'-6")
9"	1.98m (6'-6")
10"	2.29m (7'-6")
11"	2.59m (8'-6")
12"	2.90m (9'-6")
13"	3.2m (10'-6")

NOTES

1. Type C ramps are only to be used to mitigate existing conditions where inadequate right of way exists to use Standard Drawing G-28 or G-30, and are not to be used in new construction.
2. See Standard Drawing G-32 for general notes.

Revision	By	Approved	Date
ORIGINAL		R. Munoz	5/97
Add Metric		T. Stanton	03/03

SAN DIEGO REGIONAL STANDARD DRAWING

CURB RAMP - TYPE C
(For Existing Sidewalk)

RECOMMENDED BY THE SAN DIEGO REGIONAL STANDARDS COMMITTEE

T. Stanton 3/01/2003

Chairperson R.C.E. 19246 Date

DRAWING NUMBER G-29

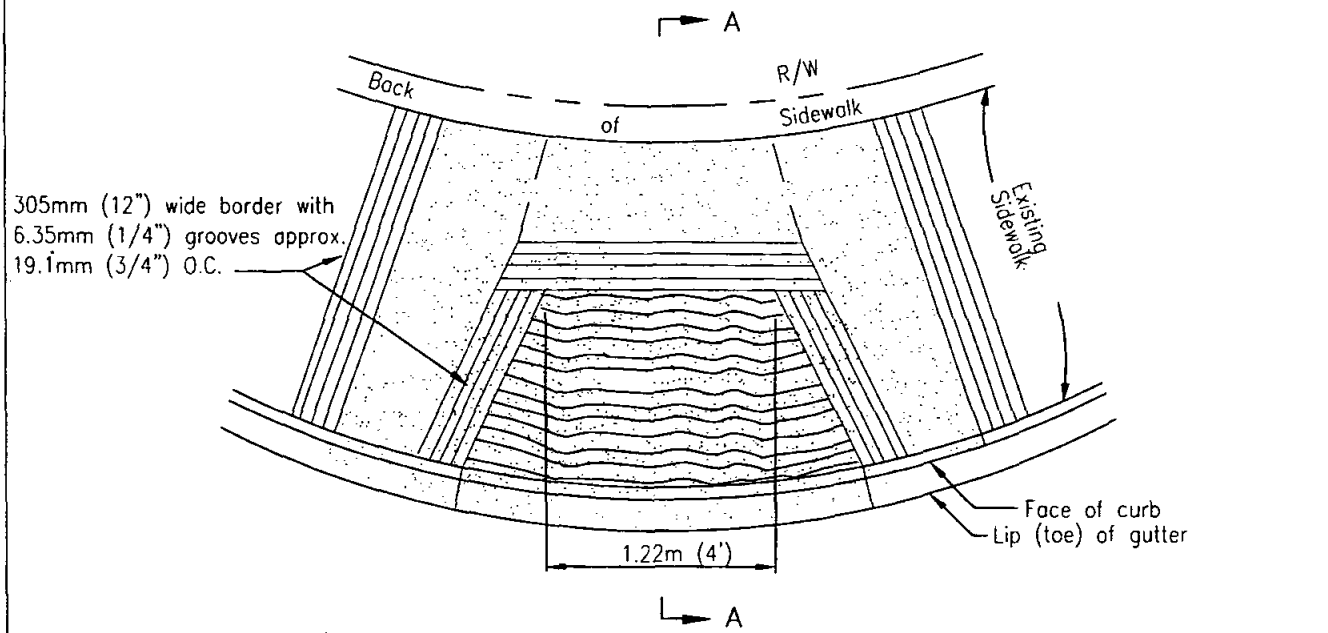

PLAN

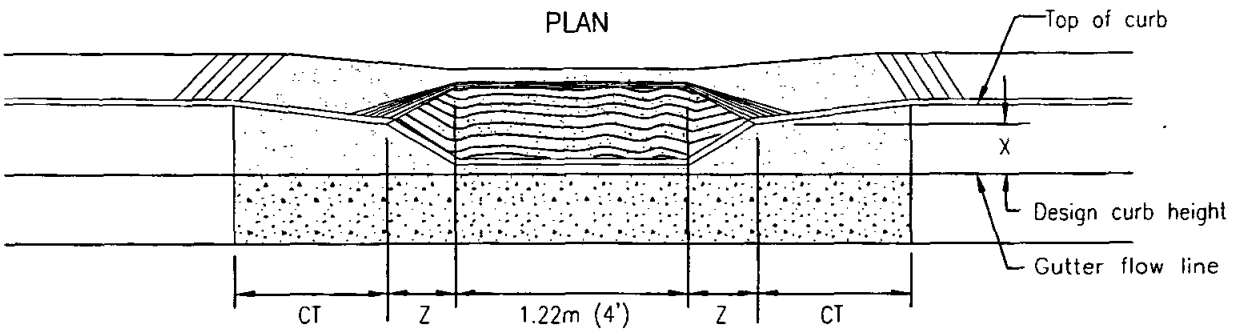

ELEVATION

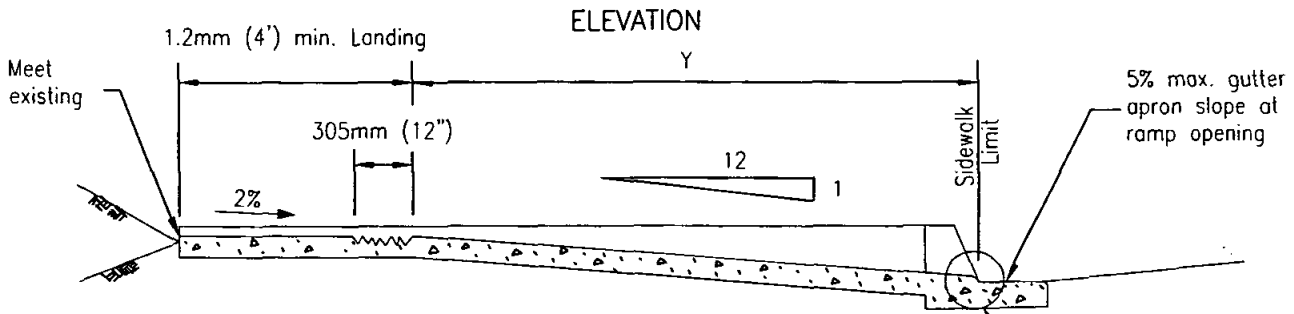

SECTION A–A

See Detail B Std. Dwg. G-32

TABLE A			
X CURB HEIGHT	Y RAMP LENGTH (12:1)	Z SIDE SLOPE (10:1)	CT CURB TRANS.
1" *	152mm (0'-6")	457mm (1'-6")	(SEE NOTE NO. 3)
2"	457mm (1'-6")	457mm (1'-6")	
3"	762mm (2'-6")	635mm (2'-1")	
4"	1.1m (3'-6")	889mm (2'-11")	
5"	1.34m (4'-6")	1.14m (3'-9")	
6"	1.68m (5'-6")	1.4m (4'-7")	
7"	1.98m (6'-6")	1.65m (5'-5")	
8"	2.29m (7'-6")	1.91m (6'-3")	

NOTES

1. See Standard Drawing G-32 for general notes.
2. X= Design Curb Height as shown on plans.
3. Curb transition (CT) shall be 305mm (1'-0") for each one inch difference between existing curb height and design curb height.
4. If specified, construct monolithic curb at back of ramp as in Std. Dwg. G-29
5. * Delete 305mm (12") inside border at ramp when X=1".

Revision	By	Approved	Date
ORIGINAL		G.Parkinson	2/95
Add Metric		T. Stanton	03/03

SAN DIEGO REGIONAL STANDARD DRAWING

CURB RAMP – TYPE C-1
(For Existing Sidewalk)

RECOMMENDED BY THE SAN DIEGO REGIONAL STANDARDS COMMITTEE

T. Stanton 3/01/2003

Chairperson R.C.E. 19246 Date

DRAWING NUMBER G-30

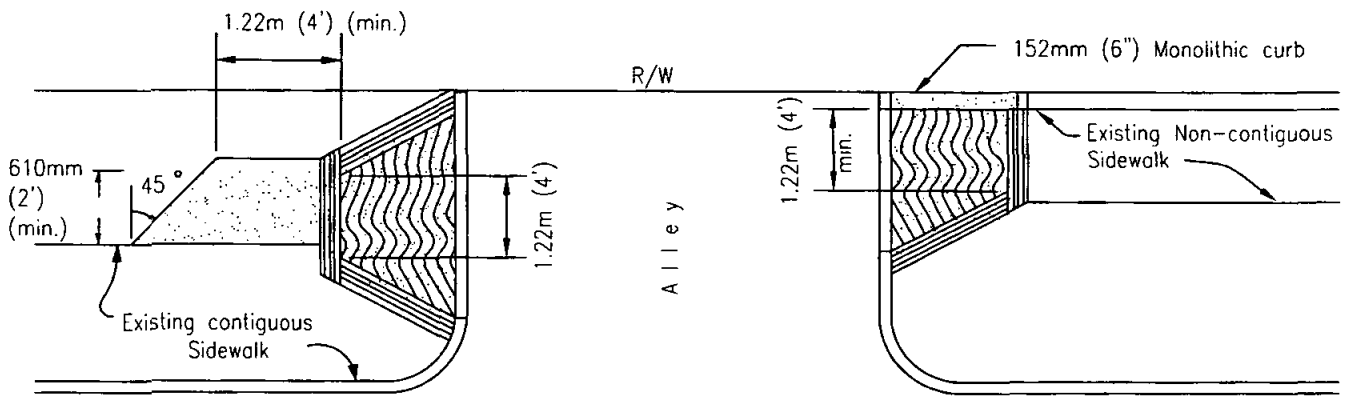

TYPICAL PLAN

X	Y	Z
CURB * HEIGHT	RAMP LENGTH (12:1)	SIDE SLOPE (10:1)
25mm (1.0")	457mm (1'-6")	457mm (1'-6")
38mm (1.5")	457mm (1'-6")	457mm (1'-6")
51mm (2.0")	457mm (1'-6")	457mm (1'-6")
64mm (2.5")	610mm (2'-0")	508mm (1'-8")
76mm (3.0")	762mm (2'-6")	635mm (2'-1")
89mm (3.5")	914mm (3'-0")	762mm (2'-6")
102mm (4.0")	1.06m (3'-6")	889mm (2'-11")
114mm (4.5")	1.22m (4'-0")	1.01m (3'-4")
127mm (5.0")	1.34m (4'-6")	1.14m (3'-9")
140mm (5.5")	1.52m (5'-0")	1.27m (4'-2")
152mm (6.0")	1.68m (5'-6")	1.40m (4'-7")
165mm (6.5")	1.83m (6'-0")	1.53m (5'-0")
178mm (7.0")	1.98m (6'-6")	1.65m (5'-5")
191mm (7.5")	2.13m (7'-0")	1.78m (5'-10")
203mm (8.0")	2.28m (7'-6")	1.9m (6'-3")

Property side "Z" dimension and grooves may be eliminated by the Engineer and replaced by a monolithic curb flush with the existing ground and sidewalk.

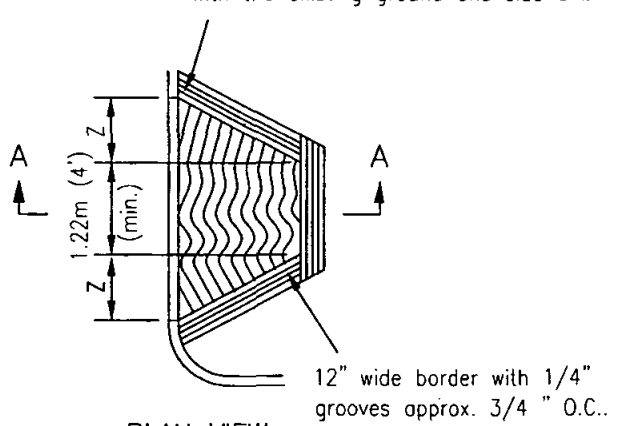

PLAN VIEW

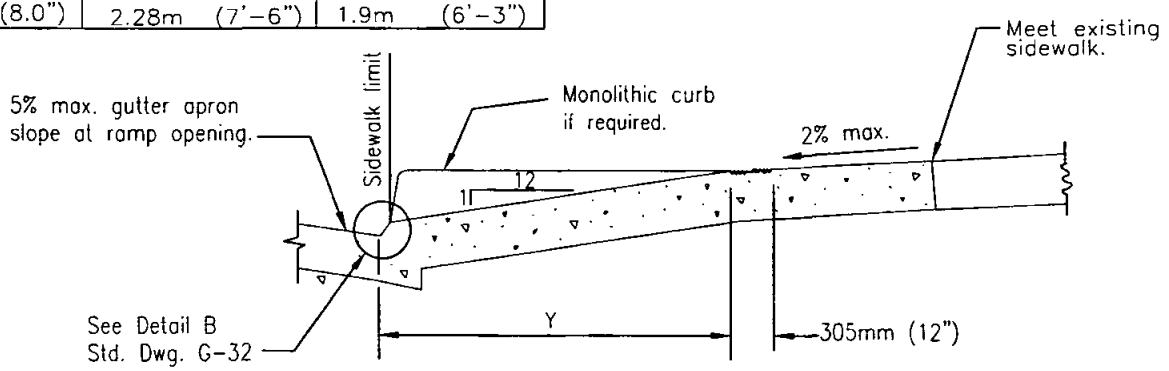

SECTION A–A

NOTES

1. See Standard Drawing G-32 for general notes.
* 2. Curb height (X) is measured at center of ramp.

Revision	By	Approved	Date
ORIGINAL		G.Parkinson	2/95
Add Metric		T. Stanton	03/03

SAN DIEGO REGIONAL STANDARD DRAWING

CURB RAMP – TYPE D

RECOMMENDED BY THE SAN DIEGO REGIONAL STANDARDS COMMITTEE

T. Stanton 3/01/2003

Chairperson R.C.E. 19246 Date

DRAWING NUMBER G-31

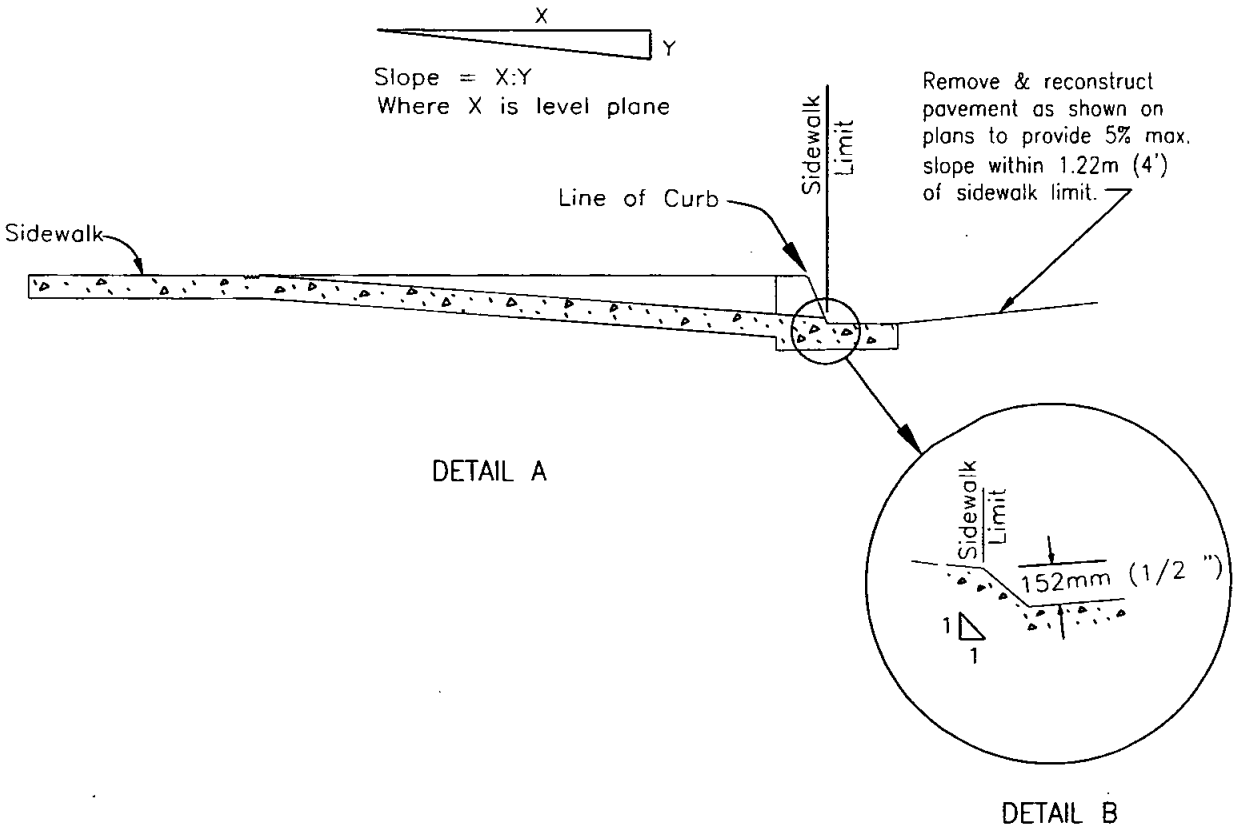

NOTES

1. The removal of existing concrete curb, gutter, sidewalk and pavement for pedestrian ramp installation shall comply with Standard Drawing G-11.
2. Areas shown thus: shall have a heavy broom "ripple" texture finish, transverse to axis of ramp contrasting visually with adjoining surfaces.
3. Areas shown thus: are the minimum required for a complete ramp installation and shall be concrete class 308 kg/M3 C 17 Mpa (520-C-2500).
4. If obstructions such as inlets, utility poles, fire hydrants, etc., are encountered, the ramp locations may be adjusted upon the approval of the Resident Engineer.
5. Ramp slope shall be a minimum grade of 15:1.
6. The ramp slopes will be measured relative to the sidewalk slope, see Detail A below. Adjoining slope beyond ramp shall not exceed 20:1 (5%).

Revision	By	Approved	Date
ORIGINAL		G.Parkinson	2/95
Add Metric		T. Stanton	03/03

SAN DIEGO REGIONAL STANDARD DRAWING

GENERAL NOTES for CURB RAMPS

RECOMMENDED BY THE SAN DIEGO REGIONAL STANDARDS COMMITTEE

T. Stanton 3/10/2003

Chairperson R.C.E. 19246 Date

DRAWING NUMBER G-32

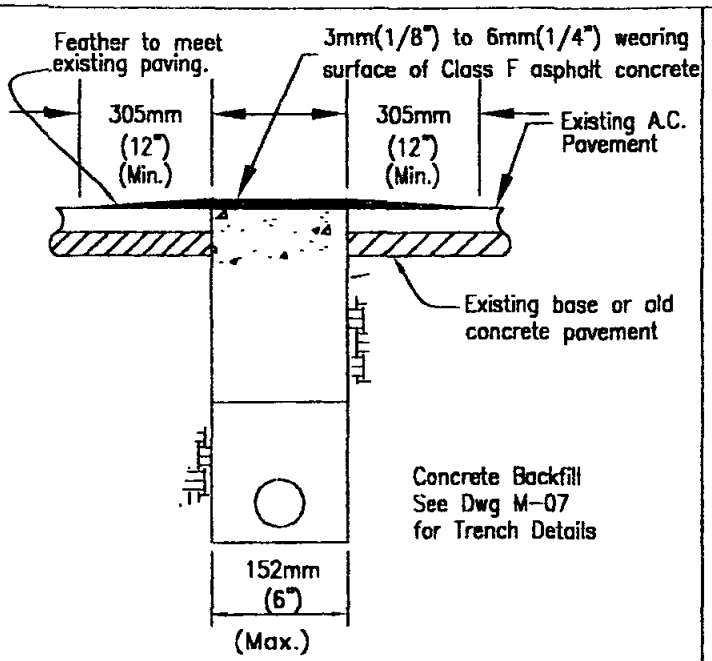

TYPE A

NOTES

1. Concrete shall be screeded off to match pavement grade and floated to assure proper edge match.
2. A tack coat shall be applied to the concrete and existing asphalt pavement prior to placing the new asphalt pavement wearing surface.
3. Existing A.C. pavement will not require saw cutting when using rockwheel for excavation.
4. Allow concret backfill to cure for seven prior to paving operation

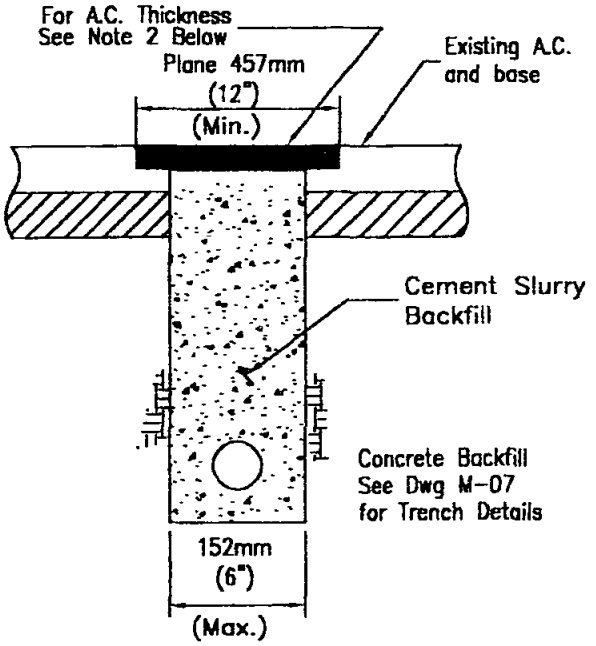

TYPE B

NOTES

1. A tack coat shall be applied to the cement slurry backfill and existing asphalt pavement prior to placing the new asphalt surface.
2. Asphaltic Concrete Resurfacing:
   a. Allow cement slurry backfill seven days minimum to cure before planing.
   b. Thichness of Asphaltic Concrete shall be a minimum of 51mm (2") or as specified by the Agency's engineer.
   c. A.C. shall be hot mix.
3. A.C. shall be sealed or chip sealed when required by the Agency's Engineer.

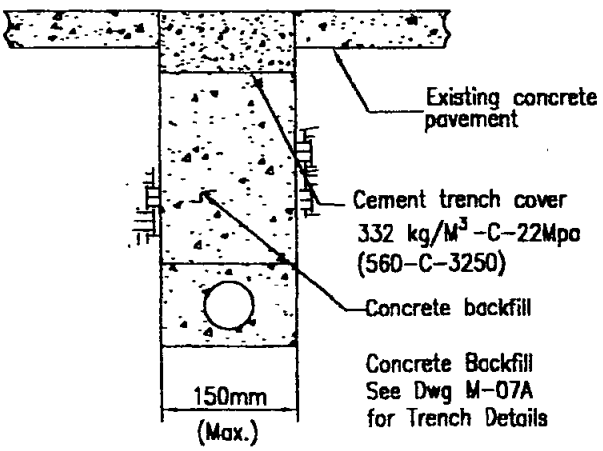

TYPE C

NOTES

1. Concrete shall be screeded off to match existing pavement grade and floated to assure proper edge match.
2. Concrete trench cover shall be a minimum of 140mm (5 1/2") thick in alley or local residential streets and 178mm (7") thick in all other streets.
3. Existing concrete pavement will require sawcutting when using rockwheel for excavation.
4. In major or prime arterial streets, an approved set accelerating admixture, such as Calcium Chloride, may be used only with prior approval of the Agency's engineer.

Revision	By	Approved	Date
ORIGINAL	HH	T. Stanton	11/02
Add Metric		T. Stanton	03/03

SAN DIEGO REGIONAL STANDARD DRAWING

NARROW TRENCHES
TRENCHING & BACKFILLING

RECOMMENDED BY THE SAN DIEGO REGIONAL STANDARDS COMMITTEE

T. Stanton 3/01/2003

Chairperson R.C.E. 19246 Date

DRAWING NUMBER G-33

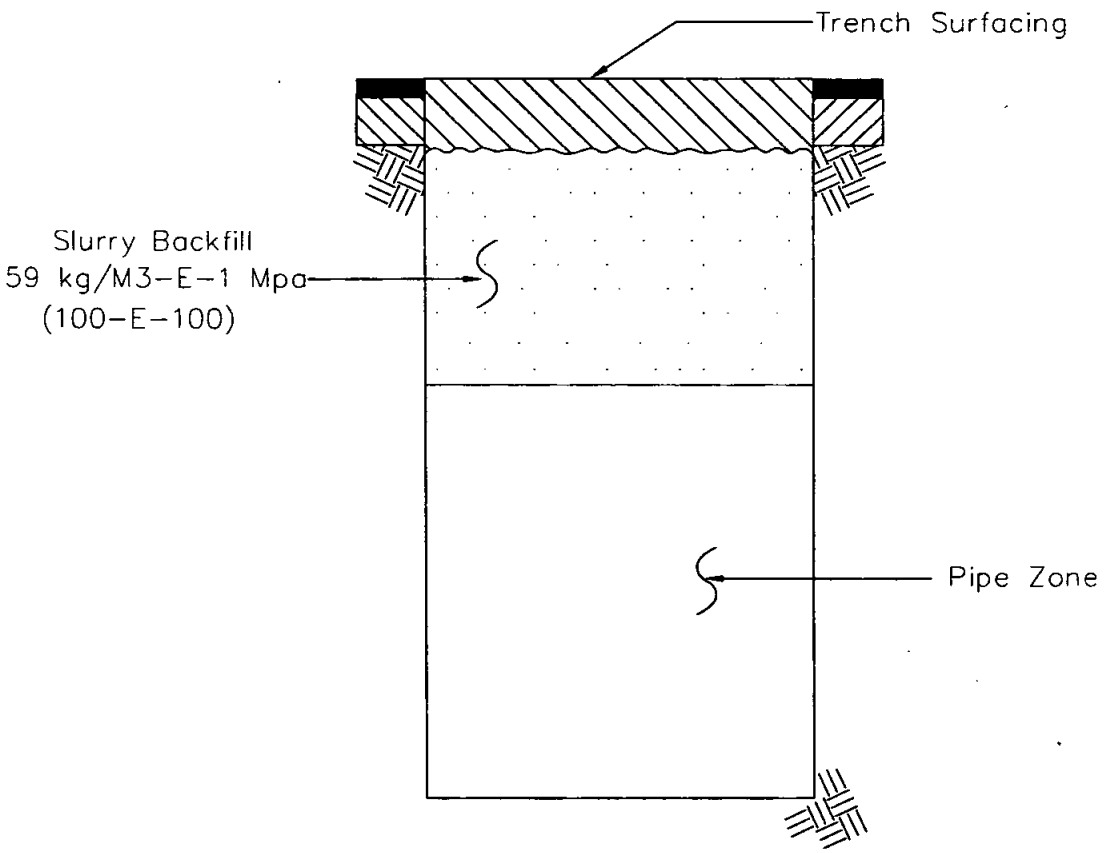

NOTES

1. Trench resurfacing shall be done according to governmental (permitting) agency's requirements.
2. The sand used for the slurry backfill shall meet the requirements for fine aggregate (subsection 400-1.3) listed in the Standard Specifications for Public Works Construction. Slurry must be firm prior to trench resurfacing.
3. Slurry backfill shall not be used where it will impede subsurface drainage.

Revision	By	Approved	Date
ORIGINAL		Parkinson	9/88
Add Metric		T. Stanton	03/03

SAN DIEGO REGIONAL STANDARD DRAWING

SLURRY BACKFILL

RECOMMENDED BY THE SAN DIEGO REGIONAL STANDARDS COMMITTEE

T. Stanton 3/10/2003

Chairperson R.C.E. 19246 Date

DRAWING NUMBER G-36

SPRINKLER IRRIGATION SYSTEMS

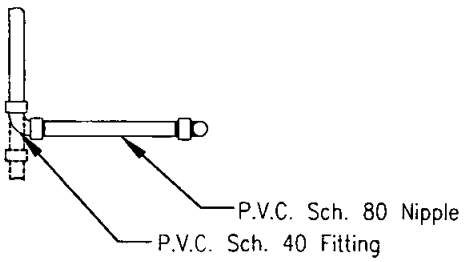

PLAN VIEW

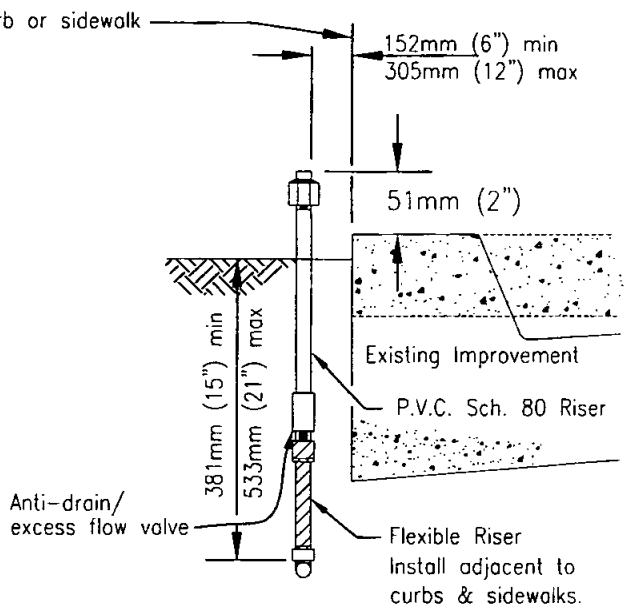

LOCATION OF SPRINKLER HEADS ADJACENT TO EXISTING IMPROVEMENTS

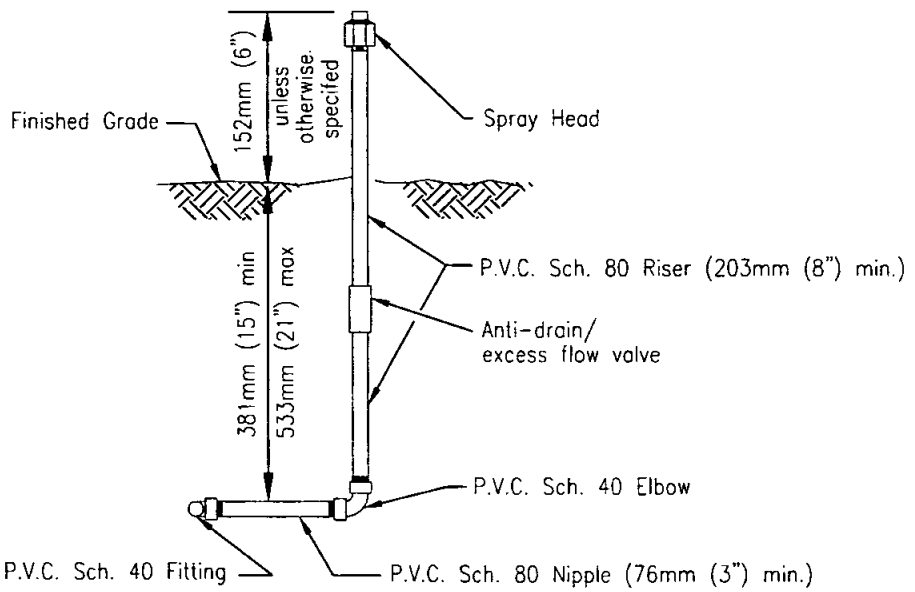

ELEVATION

NOTES

1. Teflon tape, 19mm (3/4") wide, shall be used on all threaded connections.
2. Close nipples shall not be used.

LEGEND ON PLANS

Show a number to indicate type head

Revision	By	Approved	Date
ORIGINAL		Kercheval	12/75
Add Metric		T. Stanton	03/03

SAN DIEGO REGIONAL STANDARD DRAWING

SHRUBBERY SPRINKLER HEAD
FIXED SPRAY TYPE

RECOMMENDED BY THE SAN DIEGO REGIONAL STANDARDS COMMITTEE

T. Stanton 3/01/2003

Chairperson R.C.E. 19246 Date

DRAWING NUMBER I-1

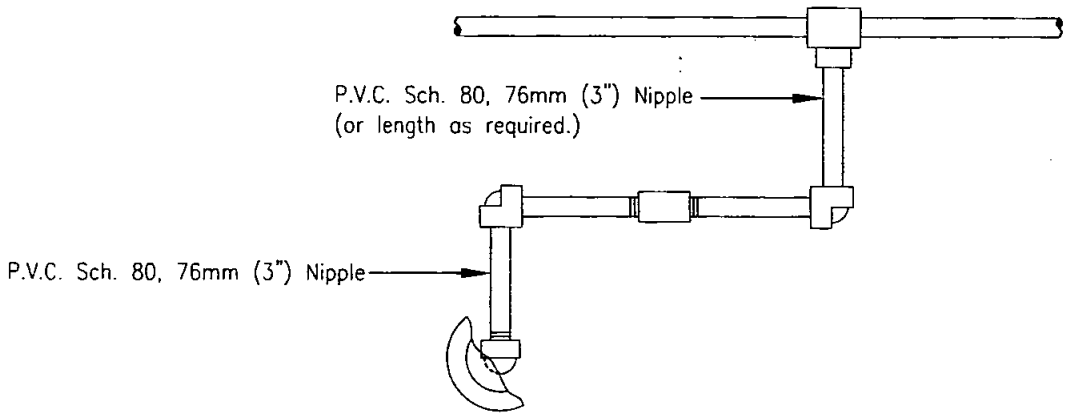

PLAN

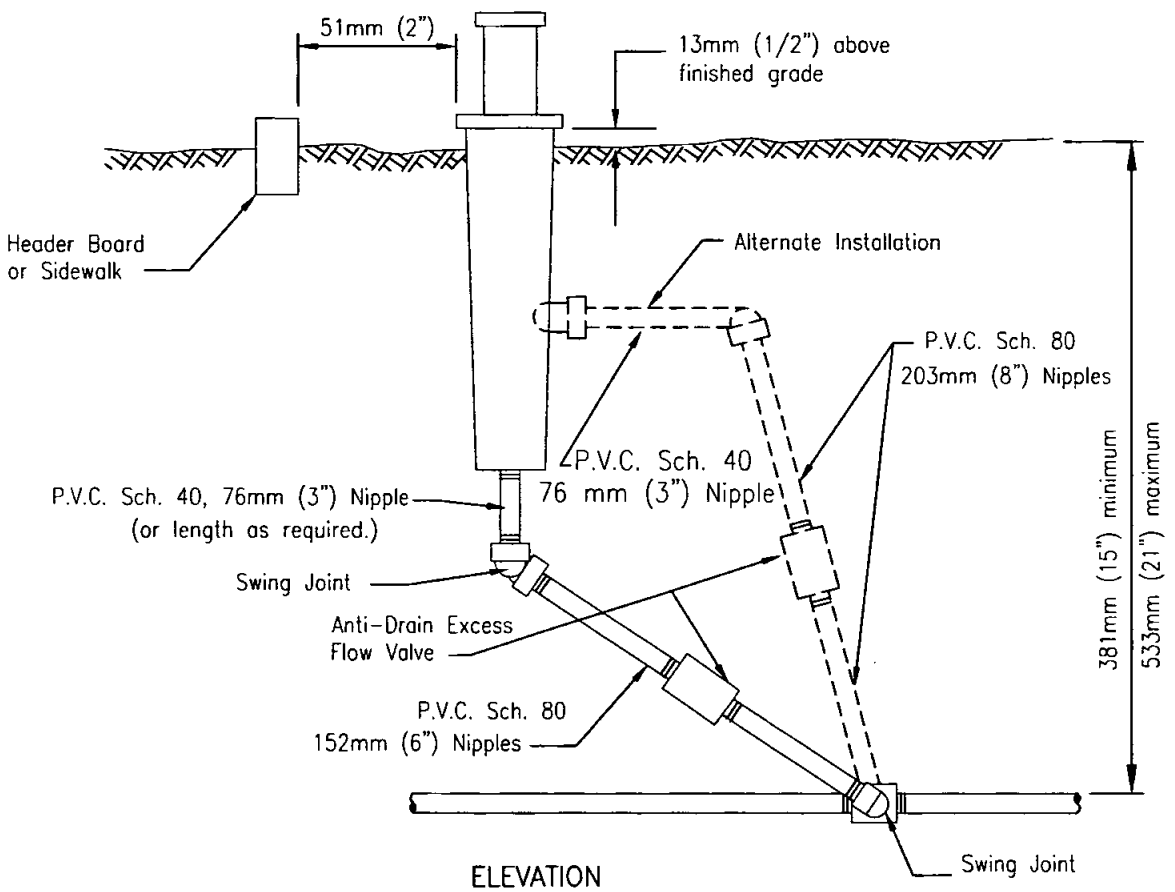

ELEVATION

NOTES

1. All fittings shall be P.V.C. Schedule 40.
2. Teflon tape, 19mm (3/4") wide, shall be used on all threaded connections.
3. Short nipples shall not be used.
4. Anti-drain/Excess Flow Valves shall be installed under all heads unless heads have a "Built-in" Anti-drain or check valve.

LEGEND ON PLANS

Show a number to indicate type head.

Revision	By	Approved	Date
ORIGINAL		Kercheval	12/75
Add Metric		T. Stanton	03/03

SAN DIEGO REGIONAL STANDARD DRAWING

SPRINKLER HEAD
POP UP SPRAY TYPE

RECOMMENDED BY THE SAN DIEGO REGIONAL STANDARDS COMMITTEE

T. Stanton 3/01/2003

Chairperson R.C.E. 19246 Date

DRAWING NUMBER I-2

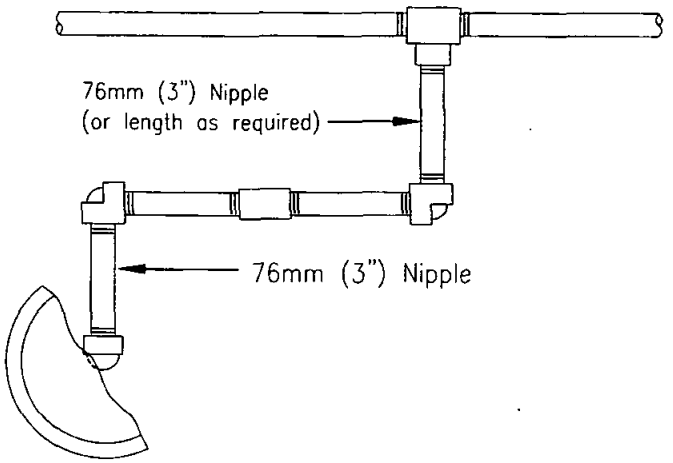

PLAN

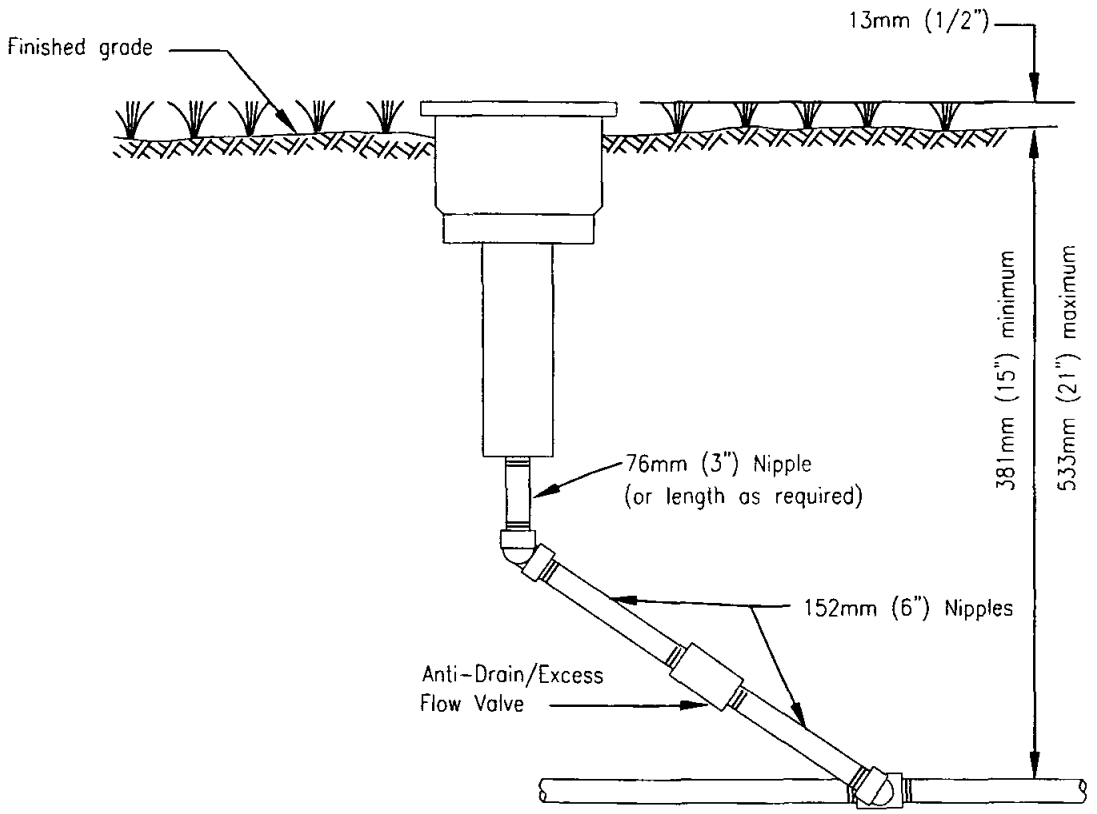

ELEVATION

NOTES

1. All fittings shall be P.V.C. Schedule 40.
2. All nipples shall be P.V.C. Schedule 80.
3. Teflon tape, 19mm (3/4") wide, shall be used on all threaded connections.
4. Short nipples shall not be used.
5. Anti-Drain/Excess Flow Valves shall be installed under all heads unless heads have a "Built-in" Anti-drain or check valve.

LEGEND ON PLANS

Show a number to indicate type head

Revision	By	Approved	Date
ORIGINAL		Kercheval	12/75
Add Metric		T. Stanton	03/03

SAN DIEGO REGIONAL STANDARD DRAWING

LAWN SPRINKLER HEAD
POP UP ROTARY [WITH SWING JOINT]

RECOMMENDED BY THE SAN DIEGO REGIONAL STANDARDS COMMITTEE

T. Stanton 3/01/2003

Chairperson R.C.E. 19246 Date

DRAWING NUMBER 1-3

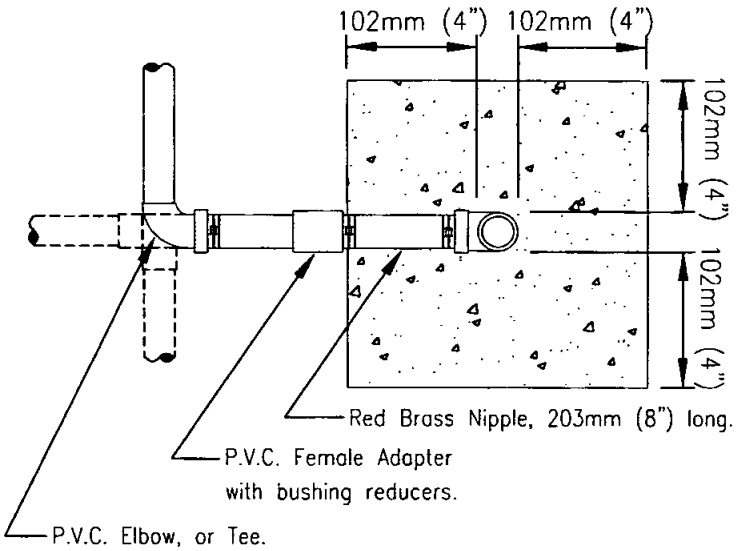

PLAN

COUPLER KEY-
SINGLE LUG

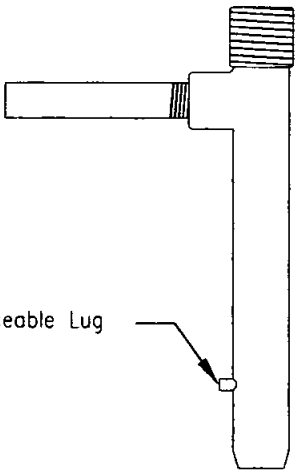

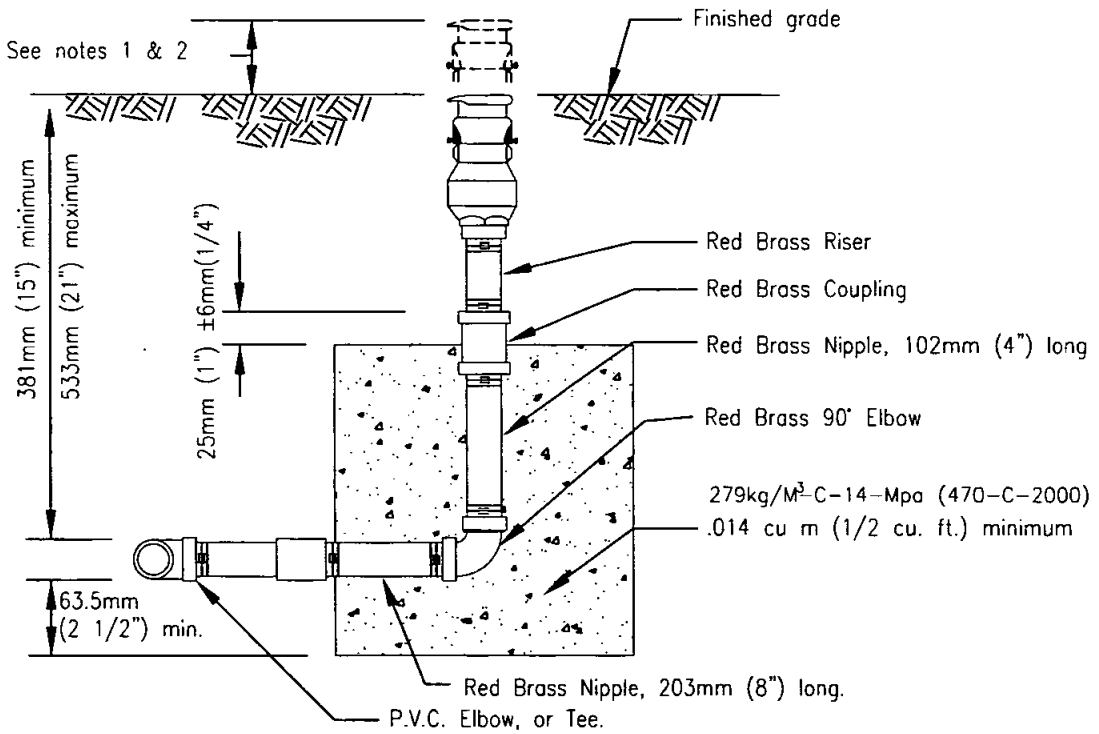

ELEVATION

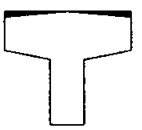

KEY FOR
LOCK TOP

NOTES

1. Quick coupling valves in lawn areas shall be set to grade.
2. Quick coupling valves in shrub areas shall be set 51mm (2") above grade.
3. Dimensions of concrete anchors are minimum.
4. Close nipples shall not be used.

LEGEND ON PLANS

QCV ◉

Revision	By	Approved	Date
ORIGINAL		Kercheval	12/75
Add Metric		T. Stanton	03/03

SAN DIEGO REGIONAL STANDARD DRAWING

QUICK COUPLING VALVE

RECOMMENDED BY THE SAN DIEGO REGIONAL STANDARDS COMMITTEE

T. Stanton 3/10/2003

Chairperson R.C.E. 19246 Date

DRAWING NUMBER 1-5

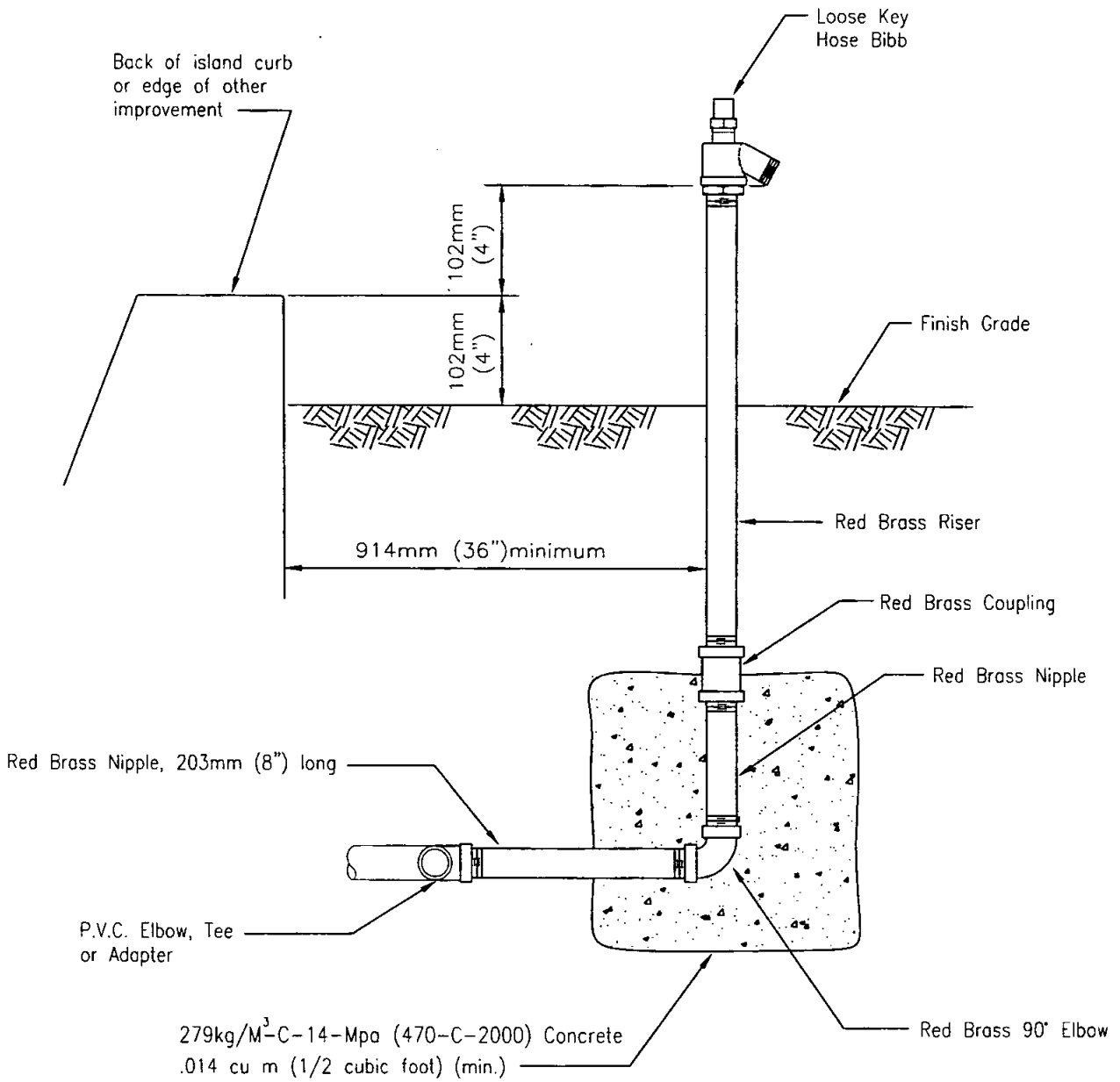

NOTES

1. Hose bibb shall be loose key operated, all brass or bronze construction, angle pattern with removable bonnet and stem assembly, replaceable seat washers and stem packing glands.
2. Unless otherwise specified, the hose connection thread shall be 19mm (3/4") male hose thread (pacific coast), and the riser opening thread shall be 19mm (3/4") female I.P.S. Discharge opening shall be 90° to be riser.

LEGEND ON PLANS

Revision	By	Approved	Date
ORIGINAL		Kercheval	12/75
Add Metric		T. Stanton	03/03

SAN DIEGO REGIONAL STANDARD DRAWING

HOSE BIBB
[GARDEN VALVE]

RECOMMENDED BY THE SAN DIEGO REGIONAL STANDARDS COMMITTEE

T. Stanton 3/10/2003

Chairperson R.C.E. 19246 Date

DRAWING NUMBER I-6

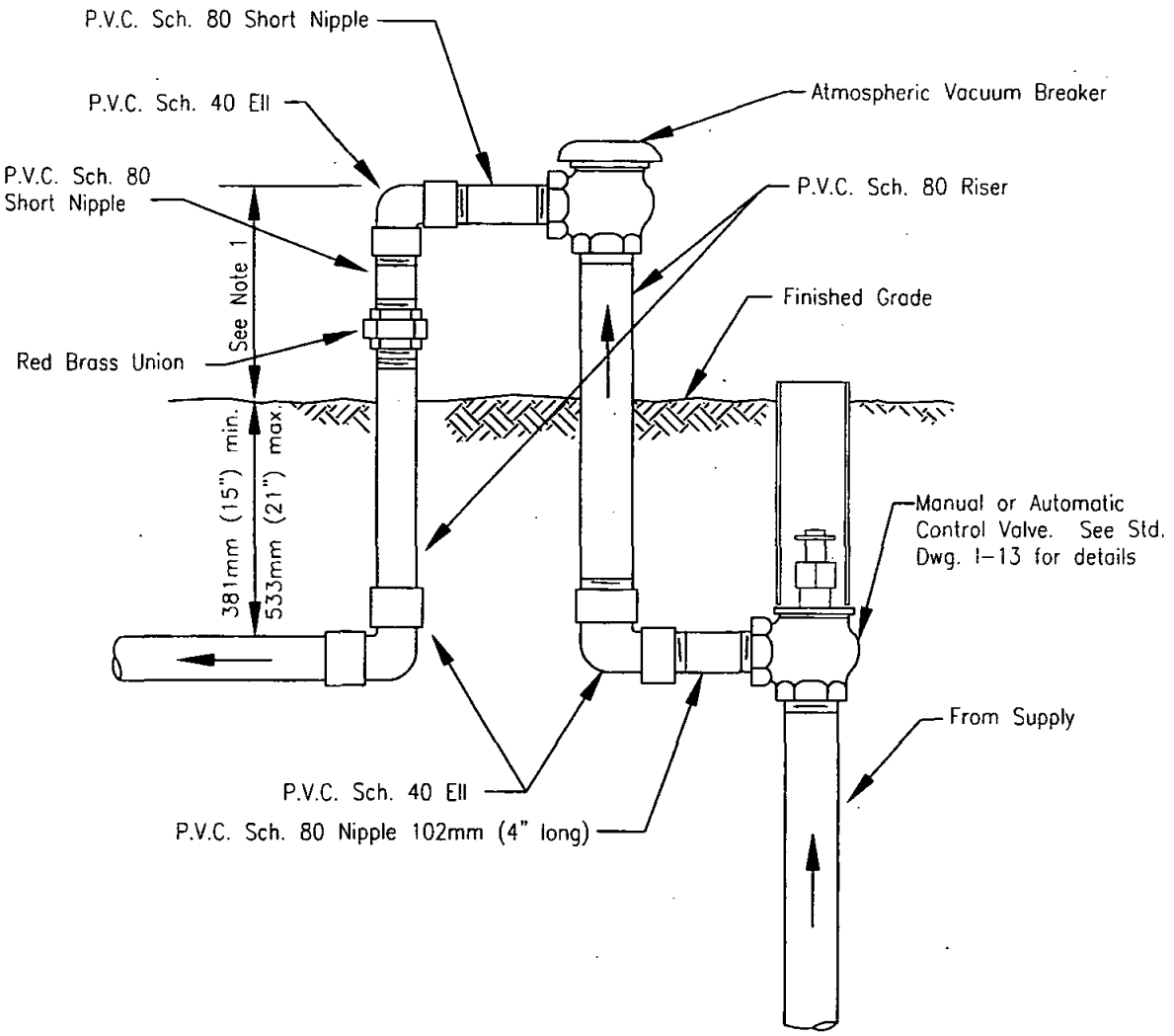

NOTES

1. Atmospheric vacuum breakers shall be installed approximately 152mm (6") above finished grade and above a sufficient number of sprinkler heads closest to the vacuum breaker so that at no time will it be subjected to back pressure or drainage.
2. Close nipples shall not be used.
3. All fittings, including the atmospheric vacuum breaker shall not be smaller size than the valve.
4. Teflon tape, 19mm (3/4") wide, shall be used on all threaded connections.
5. For use on lines 51mm (2") inches and smaller.

LEGEND ON PLANS

Revision	By	Approved	Date
ORIGINAL		Kercheval	12/75
Add Metric		T. Stanton	03/03

SAN DIEGO REGIONAL STANDARD DRAWING

BACKFLOW PREVENTER
ATMOSPHERIC VACUUM BREAKER
(2" & SMALLER)

RECOMMENDED BY THE SAN DIEGO REGIONAL STANDARDS COMMITTEE

T. Stanton 3/01/2003

Chairperson R.C.E. 19246 Date

DRAWING NUMBER I-7

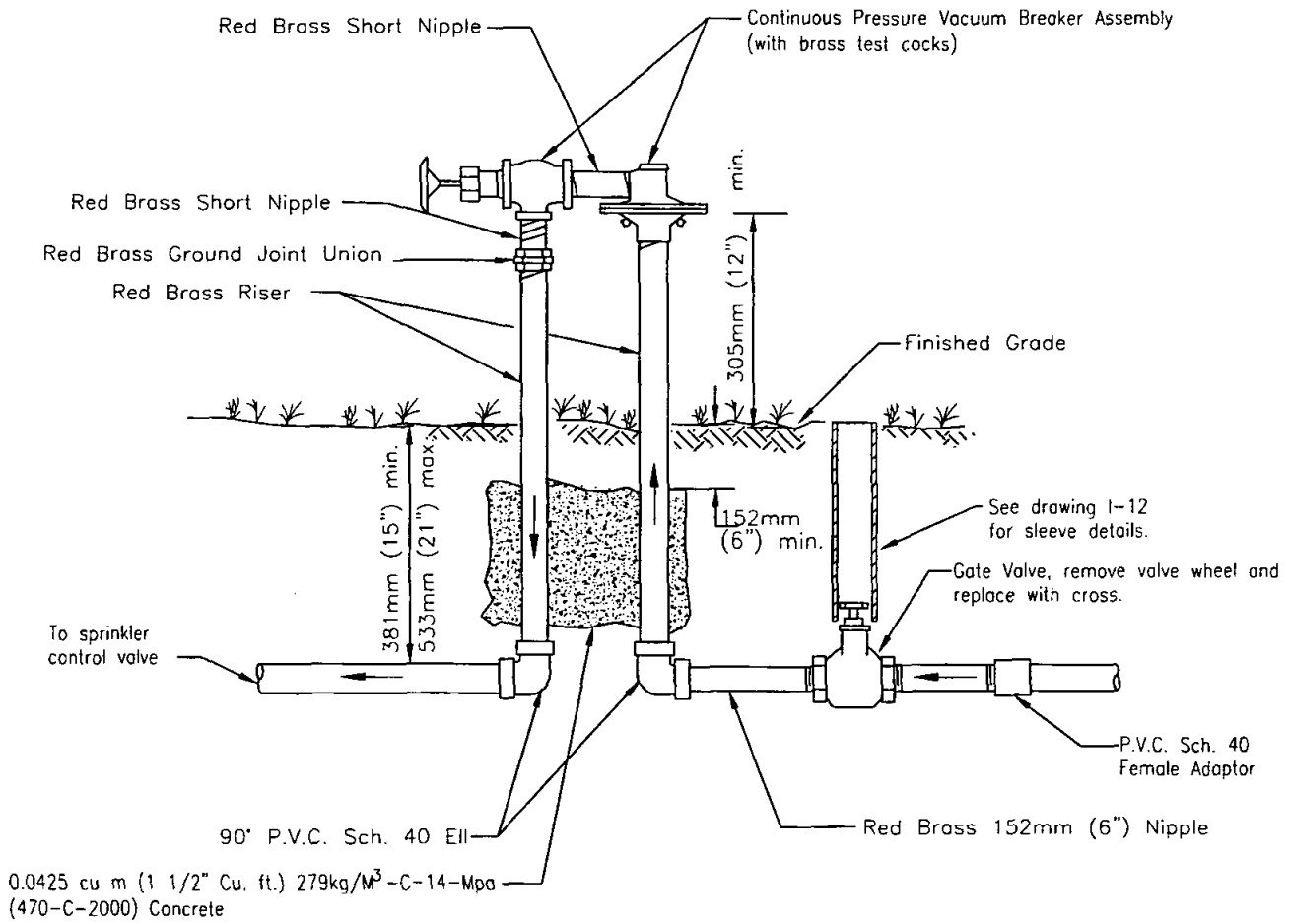

NOTES

1. Continuous pressure vacuum breakers shall be installed approximately 305mm (12") above finished grade and at the highest point in the line.
2. Continuous pressure vacuum breakers shall not be subjected to back pressure or drainage.
3. Teflon tape 19mm (3/4") wide shall be used on all threaded connections.
4. Close nipples shall not be used.

LEGEND ON PLANS

Revision	By	Approved	Date
ORIGINAL		Kercheval	12/75
Add Metric		T. Stanton	03/03

SAN DIEGO REGIONAL STANDARD DRAWING

BACKFLOW PREVENTER-CONTINUOUS PRESSURE VACUUM BREAKER ASSEMBLY (2" & SMALLER)

RECOMMENDED BY THE SAN DIEGO REGIONAL STANDARDS COMMITTEE

T. Stanton 3/10/2003

Chairperson R.C.E. 19246 Date

DRAWING NUMBER 1-8

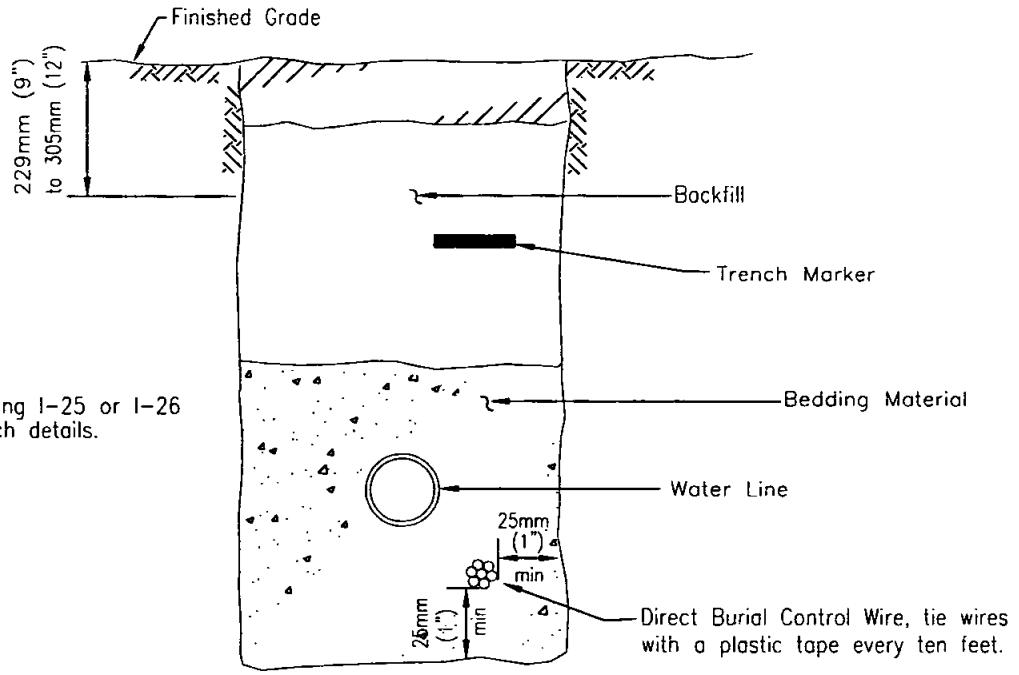

NOTE

See Standard Drawing I-25 or I-26 for water line trench details.

NORMAL LOCATIONS OF CONTROL WIRES

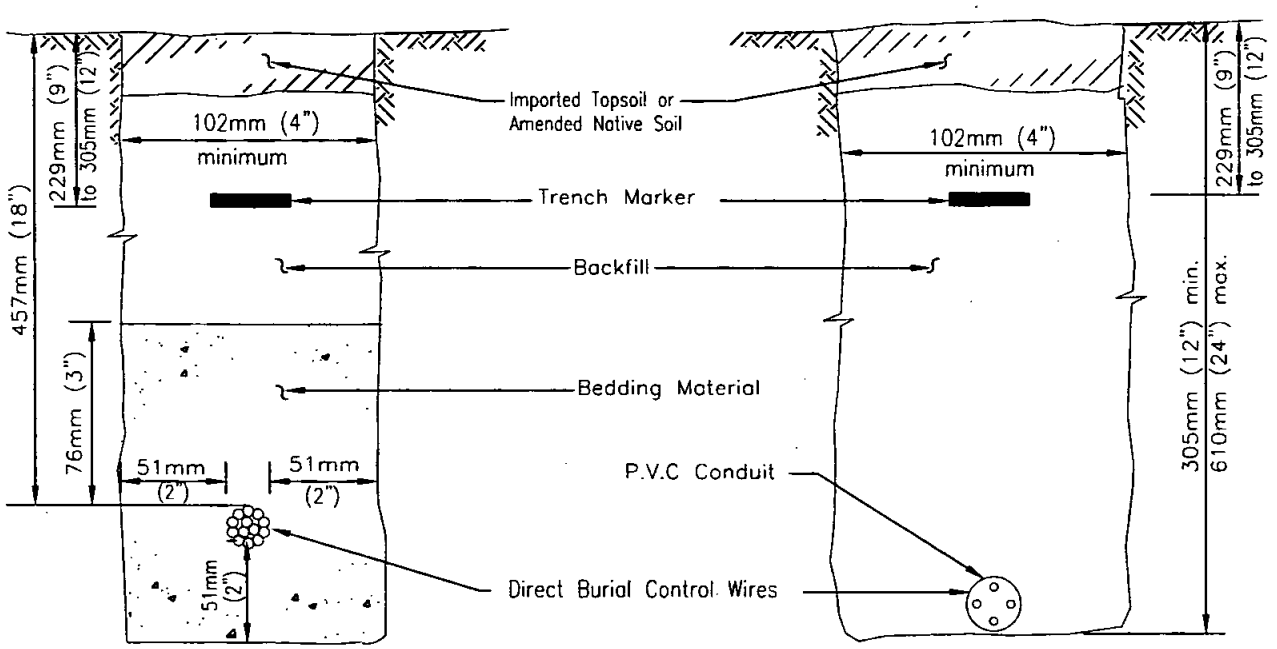

ALTERNATE LOCATION OF CONTROL WIRES

NOTES

1. Bedding material shall have a sand equivalent of 50, minimum.
2. Place a 76mm (3") wide red continuous plastic tape trench marker, 229mm (9") to 305mm (12") below finish grade, directly above the direct burial control wires.

Revision	By	Approved	Date
ORIGINAL		Kercheval	12/75
Add Metric		T. Stanton	03/03

SAN DIEGO REGIONAL STANDARD DRAWING

DIRECT BURIAL CONTROL WIRE

RECOMMENDED BY THE SAN DIEGO REGIONAL STANDARDS COMMITTEE

T. Stanton 3/01/2003

Chairperson R.C.E. 19246 Date

DRAWING NUMBER I-16

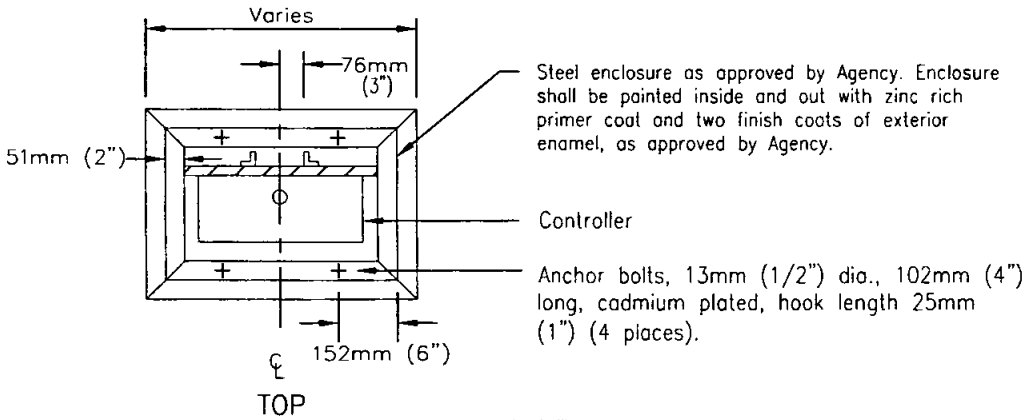

TOP

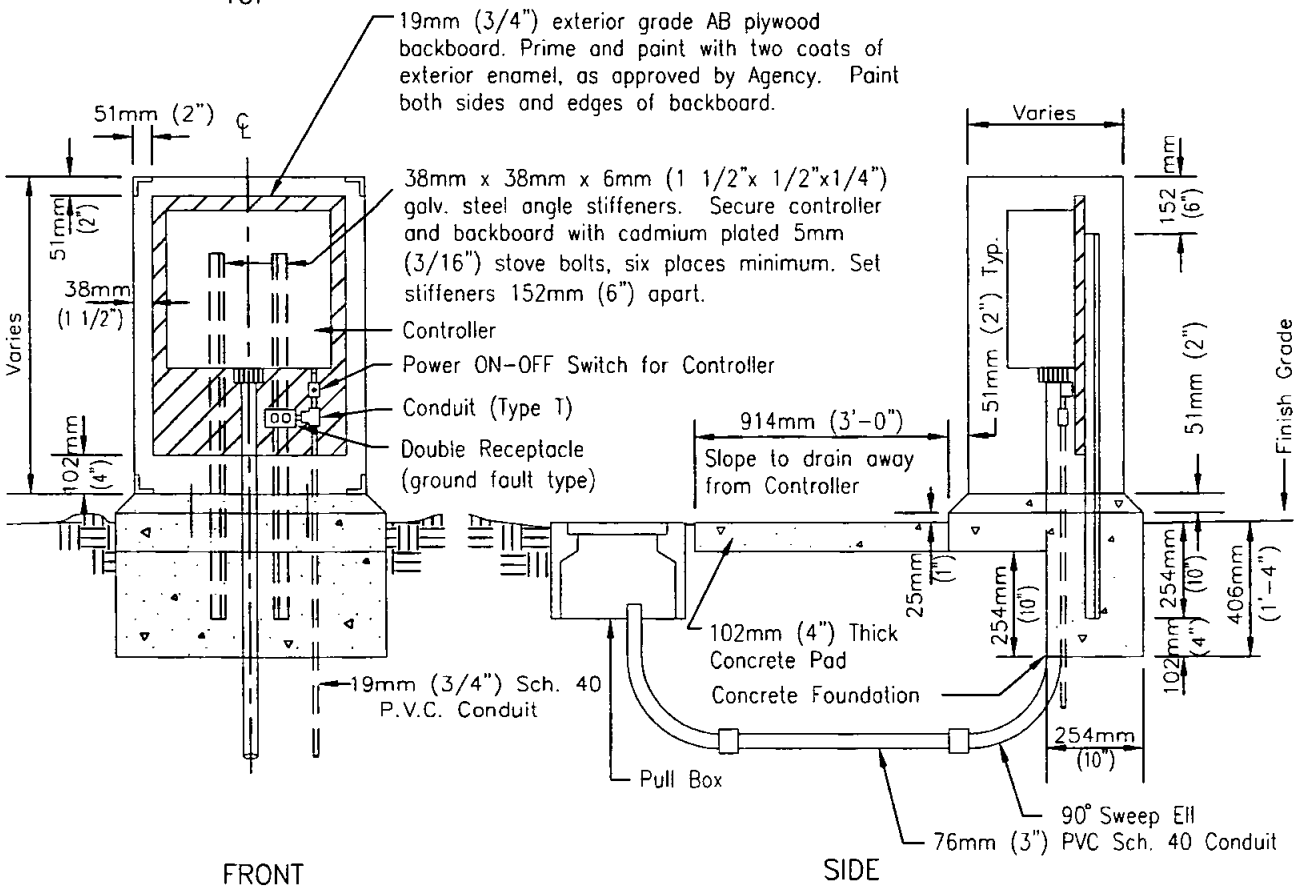

FRONT

SIDE

NOTES

1. Install in each enclosure, one 25 watt incandescent lamp in a two-prong plug in light socket. Install in receptacle.
2. A 15 amp (minimum) circuit is required at each double receptable (120 V).
3. Each controller shall have a power ON-OFF switch, with lock-out. tag-out facility.

LEGEND ON PLANS

☒

Revision	By	Approved	Date
ORIGINAL		Parkinson	5/92
Add Metric		T. Stanton	03/03

SAN DIEGO REGIONAL STANDARD DRAWING

IRRIGATION SYSTEMS
ELECTRIC CONTROLLER CLOCK
PEDESTAL MOUNTING

RECOMMENDED BY THE SAN DIEGO REGIONAL STANDARDS COMMITTEE

3/10/2003

Chairperson R.C.E. 19246 Date

DRAWING NUMBER I-17

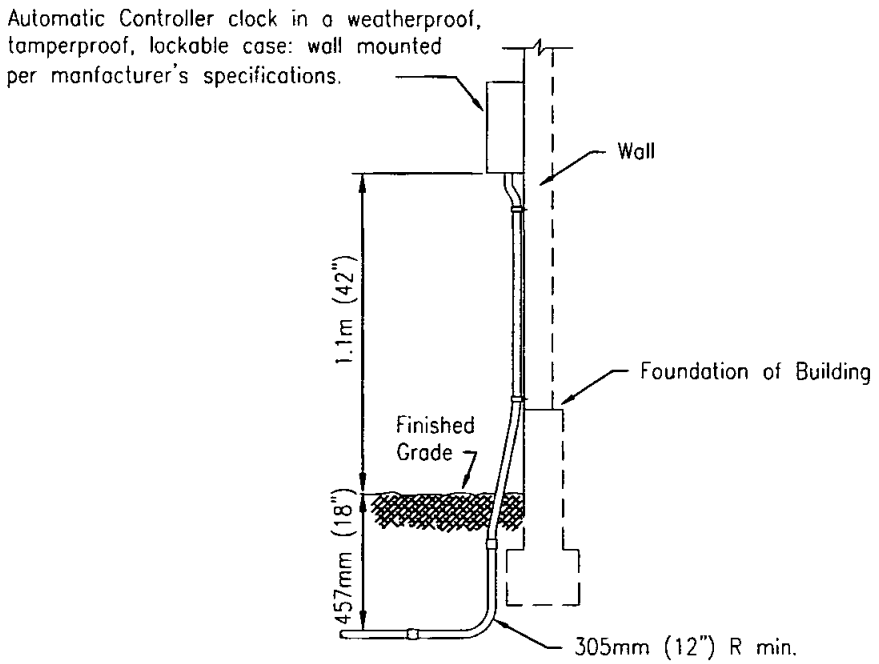

SIDE VIEW

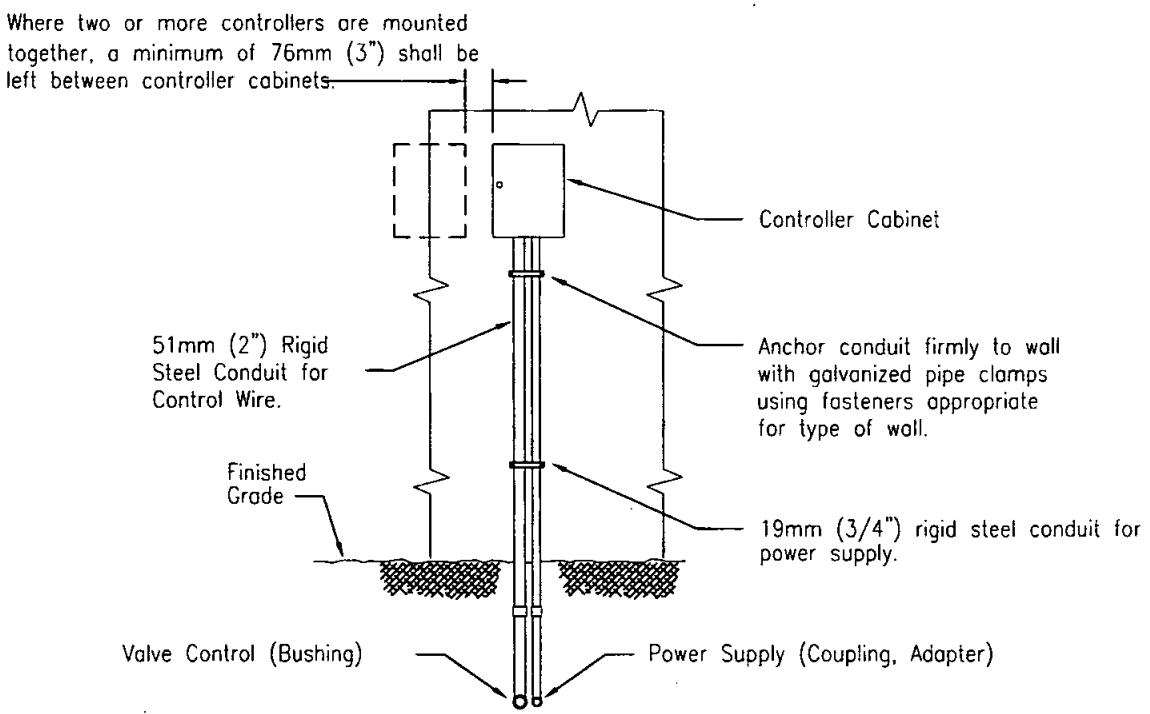

ELEVATION

NOTES

1. For location of supply conduit and conductor, refer to the plans.
2. Controller shall be grounded to power supply by ground wire.
3. Make all electrical connections inside controller cabinet.
4. Each controller shall have a power on/off switch, with lock-out, tag-out facility.

LEGEND ON PLANS

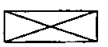

Revision	By	Approved	Date
ORIGINAL		Kercheval	12/75
Add Metric		T. Stanton	03/03

SAN DIEGO REGIONAL STANDARD DRAWING

IRRIGATION SYSTEMS
ELECTRIC CONTROLLER CLOCK
WALL MOUNTING

RECOMMENDED BY THE SAN DIEGO REGIONAL STANDARDS COMMITTEE

T. Stanton 3/10/2003

Chairperson R.C.E. 19246 Date

DRAWING NUMBER I-18

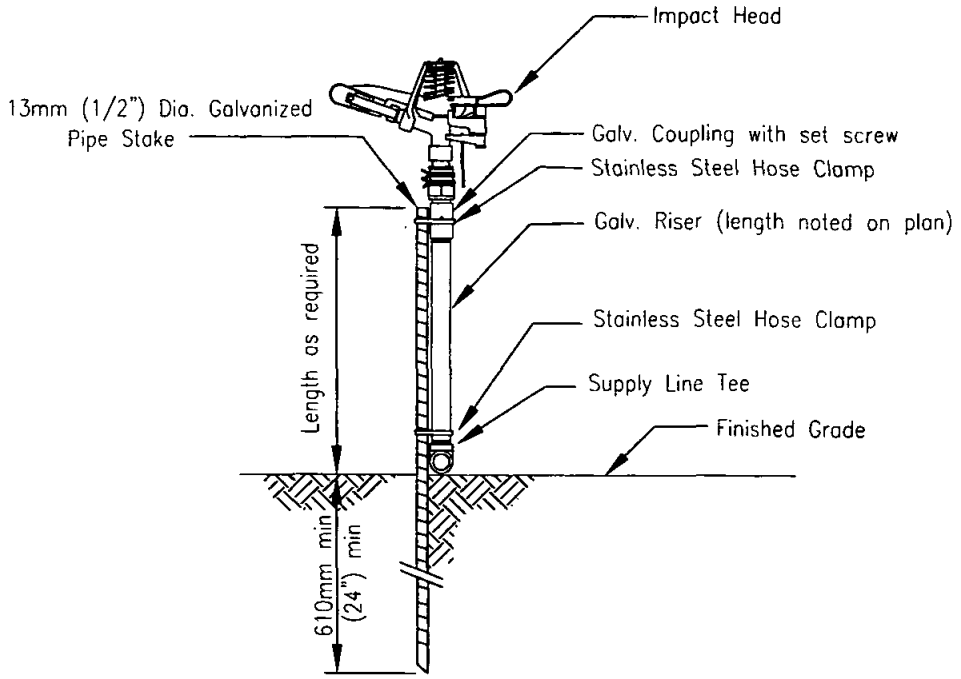

LEVEL INSTALLATION

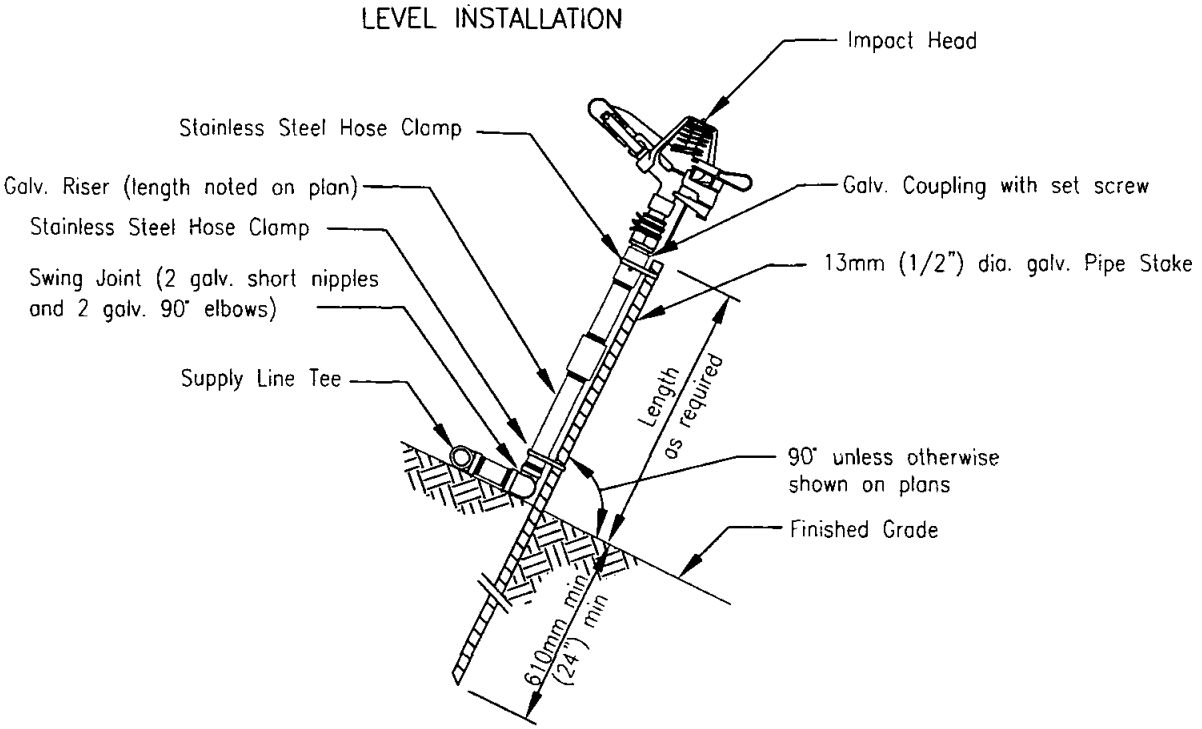

SLOPE INSTALLATION

LEGEND ON PLANS

Show a number to indicate type head

Revision	By	Approved	Date
ORIGINAL		Kercheval	12/75
Add Metric		T. Stanton	03/03

SAN DIEGO REGIONAL STANDARD DRAWING

IMPACT HEAD
ABOVE GROUND PIPE INSTALLATIONS

RECOMMENDED BY THE SAN DIEGO REGIONAL STANDARDS COMMITTEE

T. Stanton 3/10/2003

Chairperson R.C.E. 19246 Date

DRAWING NUMBER I-19

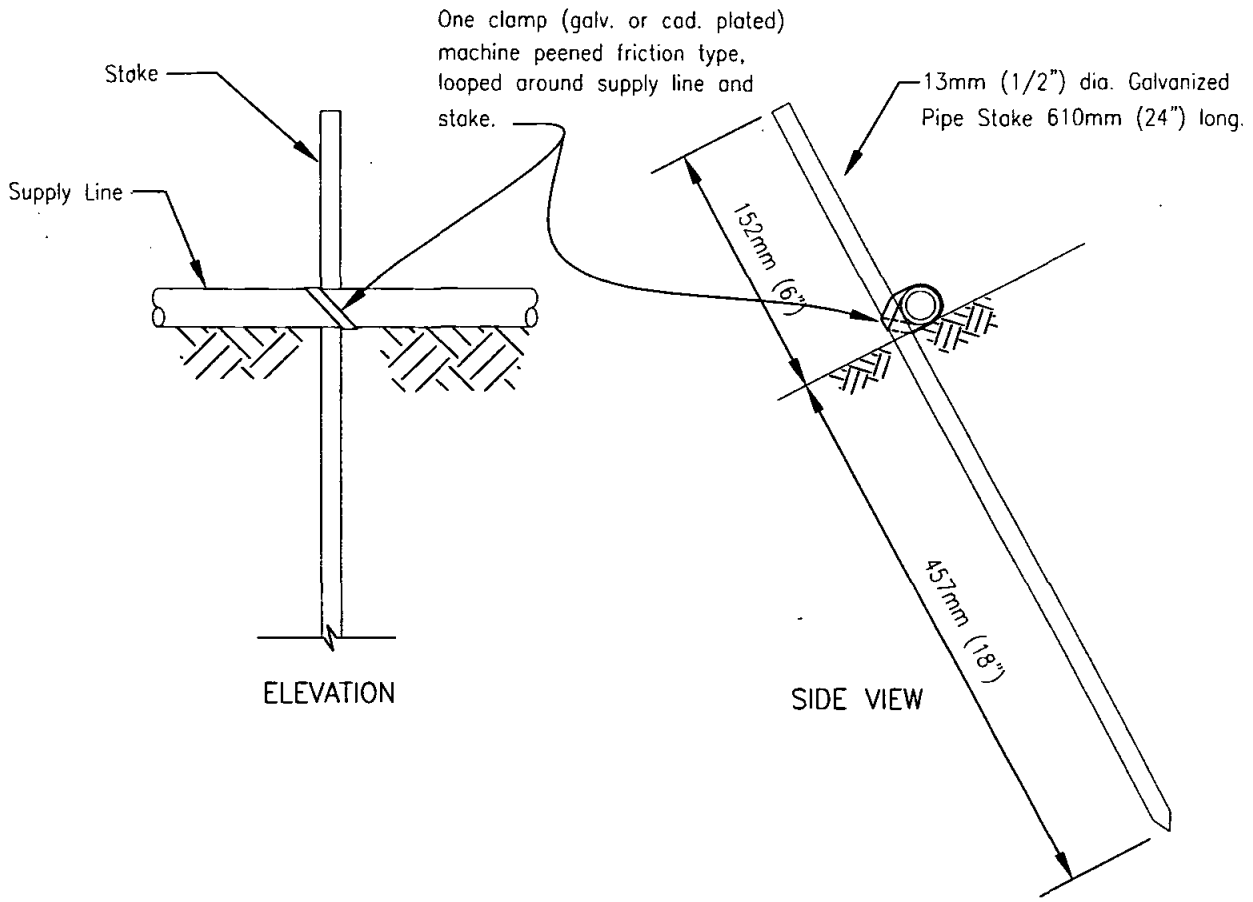

NOTE

Stakes shall be placed no greater than 4.57 m (15') apart and at each riser.

Revision	By	Approved	Date
ORIGINAL		Kercheval	12/75
Add Metric		T. Stanton	03/03

SAN DIEGO REGIONAL STANDARD DRAWING

PINNING OF PIPE
ABOVE GROUND PIPE INSTALLATIONS

RECOMMENDED BY THE SAN DIEGO REGIONAL STANDARDS COMMITTEE

T. Stanton 3/01/2003

Chairperson R.C.E. 19246 Date

DRAWING NUMBER I-20

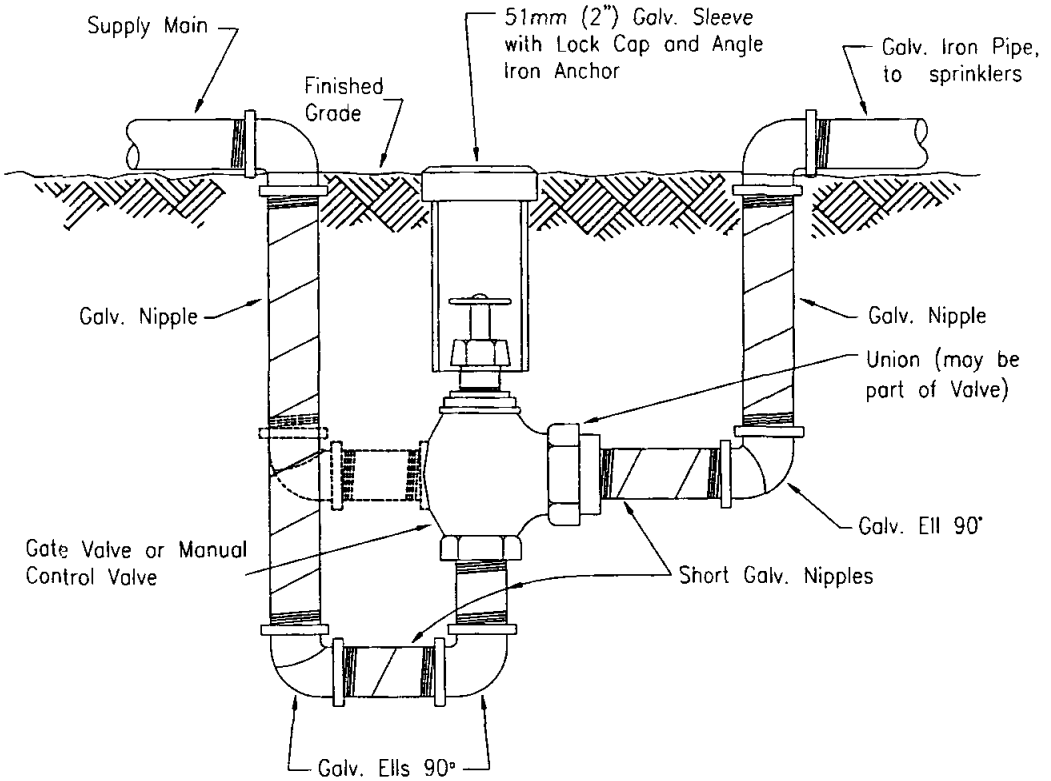

NOTE

All Galvanized Pipe, Nipples and Fittings installed underground shall be wrapped with 51mm (2") wide plastic backed adhesive tape, use 13mm (1/2") overlap.

LEGEND ON PLANS

M.C.V.

G.V.

Revision	By	Approved	Date
ORIGINAL		Kercheval	12/75
Add Metric		T. Stanton	03/03

SAN DIEGO REGIONAL STANDARD DRAWING

MANUAL CONTROL VALVE AND GATE VALVE INSTALLATION FOR ABOVE GROUND PIPE INSTALLATIONS

RECOMMENDED BY THE SAN DIEGO REGIONAL STANDARDS COMMITTEE

T. Stanton 3/10/2003

Chairperson R.C.E. 19246 Date

DRAWING NUMBER 1-21

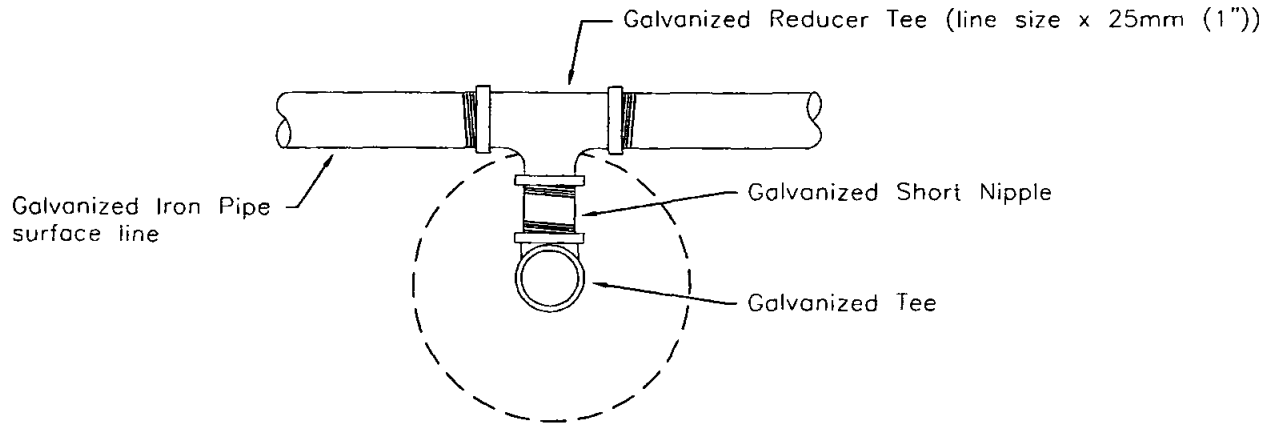

PLAN

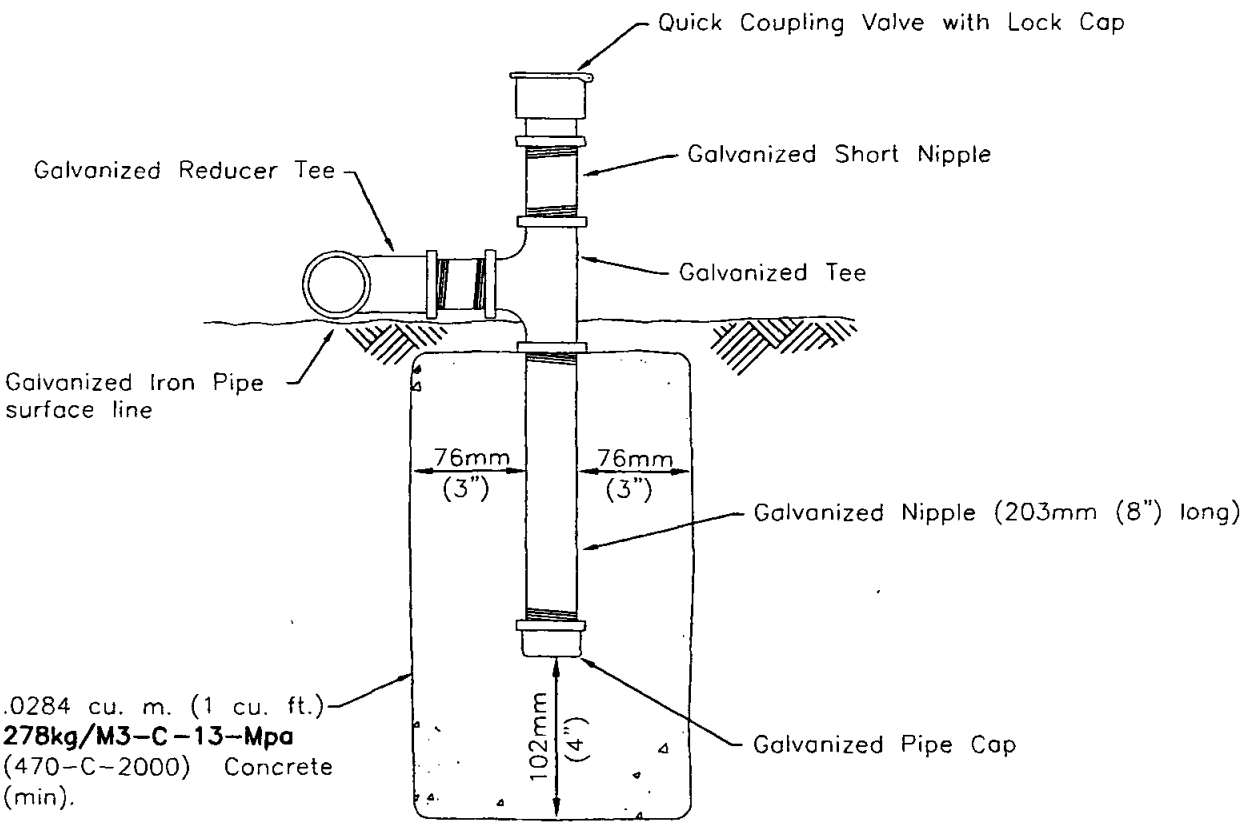

ELEVATION

LEGEND ON PLANS

Revision	By	Approved	Date
ORIGINAL		Kercheval	12/75
Add Metric		T. Stanton	03/03

SAN DIEGO REGIONAL STANDARD DRAWING

QUICK COUPLER ASSEMBLY
ABOVE GROUND PIPE INSTALLATIONS

RECOMMENDED BY THE SAN DIEGO REGIONAL STANDARDS COMMITTEE

T. Stanton 3/10/2003

Chairperson R.C.E. 19246 Date

DRAWING NUMBER 1-22

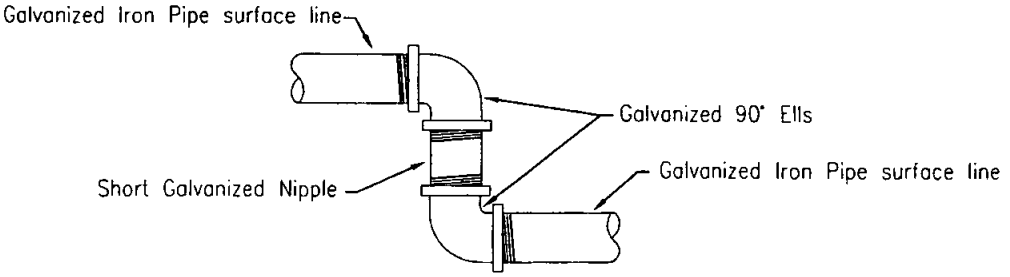

SWING JOINT DETAIL

PLAN

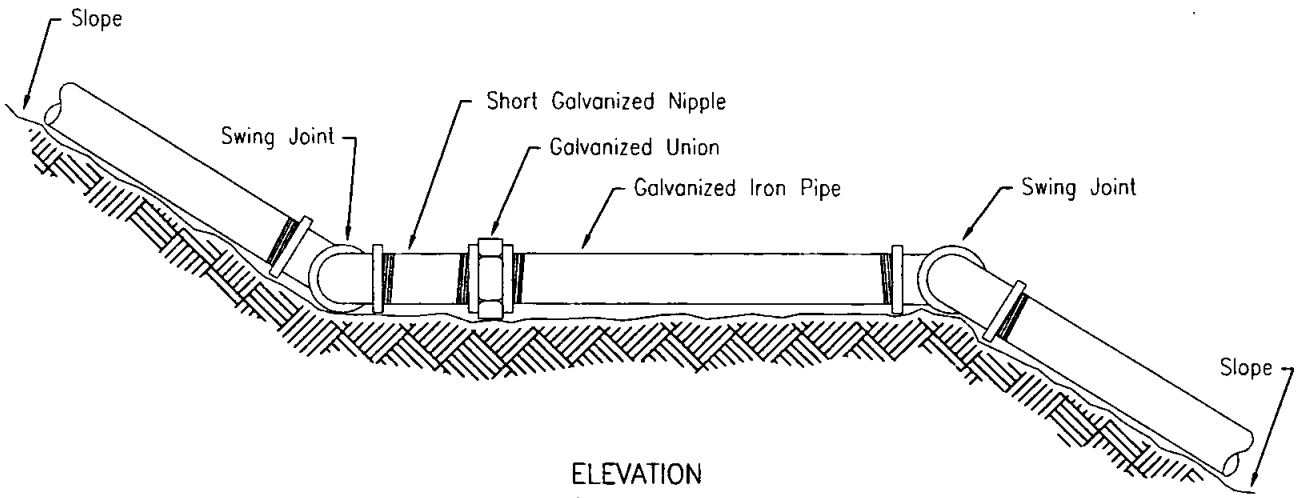

ELEVATION

NOTE
Swing Joints shall be used at each change of grade.

LEGEND ON PLANS

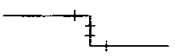

Revision	By	Approved	Date
ORIGINAL		Kercheval	12/75
Add Metric		T. Stanton	03/03

SAN DIEGO REGIONAL STANDARD DRAWING

SWING JOINT AND PIPE INSTALLATION
ON SLOPES
ABOVE GROUND PIPE INSTALLATIONS

RECOMMENDED BY THE SAN DIEGO REGIONAL STANDARDS COMMITTEE

T. Stanton 3/01/2003

Chairperson R.C.E. 19246 Date

DRAWING NUMBER 1-23

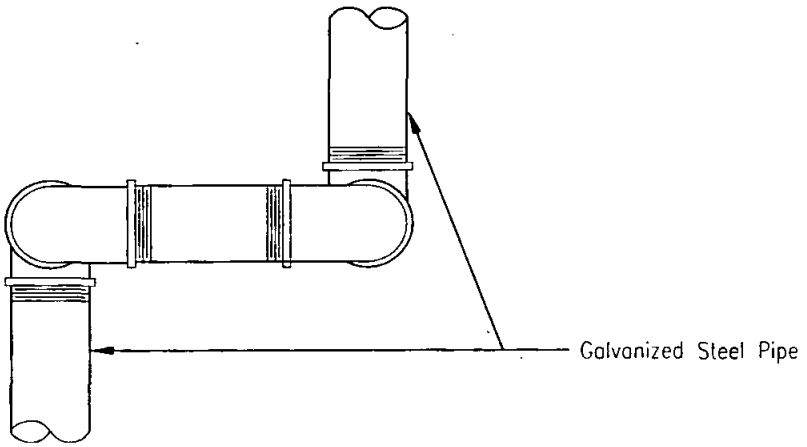

PLAN

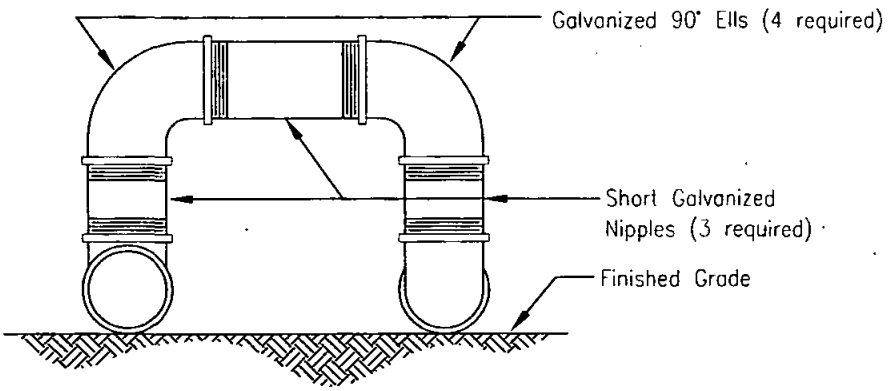

ELEVATION

NOTES

1. Double swing joint shall be used where changes of grade and alignment occur simultaneously.
2. Double swing joint shall be used for expansion joint on long runs of galvanized pipe. (91.44m (300') maximum runs)

LEGEND ON PLANS

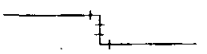

Revision	By	Approved	Date
ORIGINAL		Kercheval	12/75
Add Metric		T. Stanton	03/03

SAN DIEGO REGIONAL STANDARD DRAWING

DOUBLE SWING JOINT
ABOVE GROUND PIPE INSTALLATIONS

RECOMMENDED BY THE SAN DIEGO REGIONAL STANDARDS COMMITTEE

T. Stanton 3/10/2003

Chairperson R.C.E. 19246 Date

DRAWING NUMBER 1-24

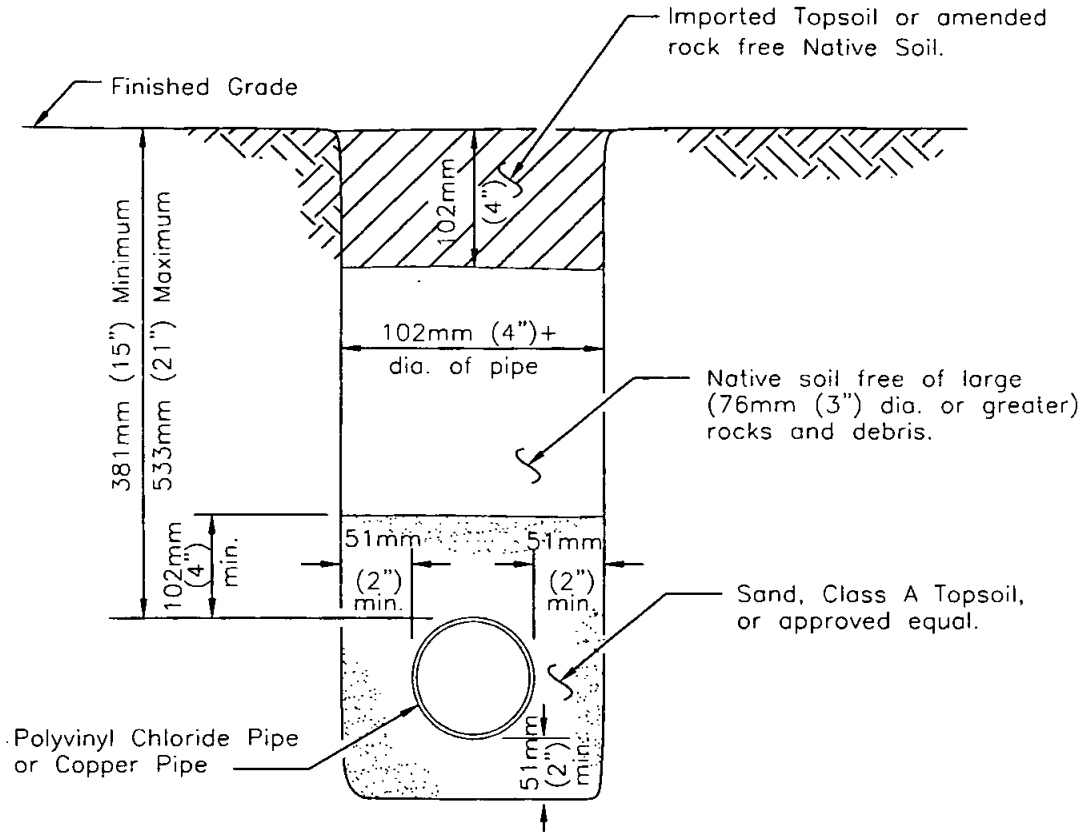

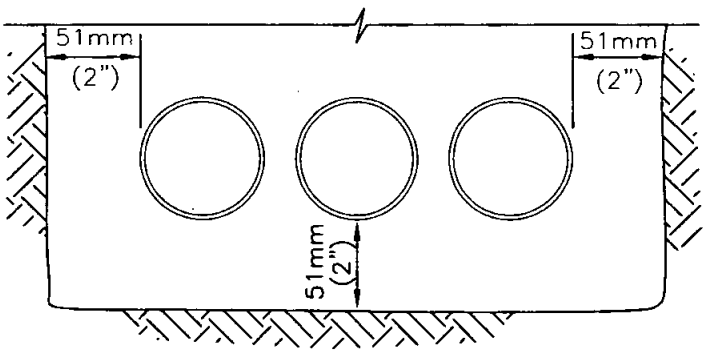

Details not shown are same as above.

MULTIPLE PIPE INSTALLATION DETAIL

(non–pressure pipe only, see Note 6 for pressure pipe)

NOTES

1. Backfill material shall be compacted to a relative compaction of 90% or more.
2. All P.V.C. pipe shall lay free in the trench with no induced strain and with sufficient allowance for expansion and contraction as recommended by the manufacturer.
3. Teflon tape, 19mm (3/4") wide shall be used on all threaded connections.
4. The letter W shall be stamped or chiseled on the improvement (curb–sidewalk) directly above the pressure pipeline.
5. All plastic pipe under pavement shall be installed in a P.V.C. sleeve.
6. Minimum clearance between pressure pipes shall be 51mm (2")

Revision	By	Approved	Date
ORIGINAL		Parkinson	02/95
Add Metric		T. Stanton	03/03

SAN DIEGO REGIONAL STANDARD DRAWING

TRENCH DETAIL P.V.C. AND/OR COPPER PIPE (76mm (3") AND SMALLER)

RECOMMENDED BY THE SAN DIEGO REGIONAL STANDARDS COMMITTEE

3/10/2003

Chairperson R.C.E. 19246 Date

DRAWING NUMBER I-25

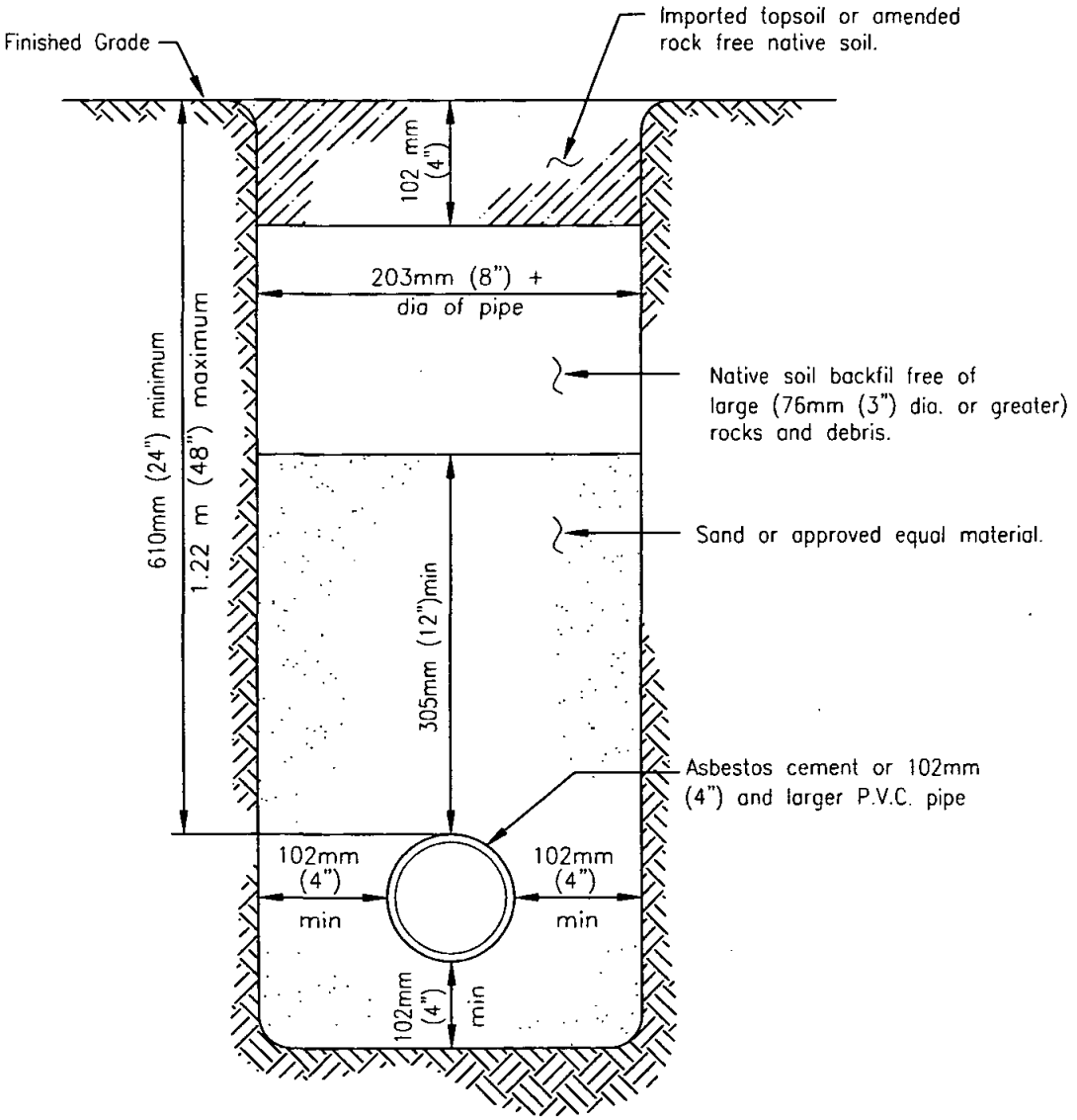

NOTES

1. Backfill material shall be compacted to a relative compaction of 90% or more.
2. All pipeline fittings shall be cast iron, short body, Class 250, cement mortar lined and polyethylene wrapped. All fittings shall have thrust blocks or anchors.
3. The letter W shall be stamped or chiseled on the improvement (curb–sidewalk) directly above the pressure pipeline.
4. No P.V.C. pressure pipeline shall be installed within 914mm (3') of any line, unless otherwise specified.

Revision	By	Approved	Date
ORIGINAL		Kercheval	12/75
Add Metric		T. Stanton	03/03

SAN DIEGO REGIONAL STANDARD DRAWING

TRENCH DETAIL – ASBESTOS CEMENT PIPE AND 102mm (4") AND LARGER P.V.C.

RECOMMENDED BY THE SAN DIEGO REGIONAL STANDARDS COMMITTEE

T. Stanton 3/10/2003

Chairperson R.C.E. 19246 Date

DRAWING NUMBER I–26

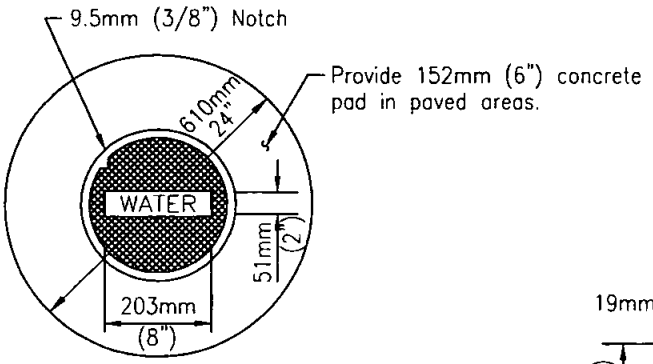

PLAN

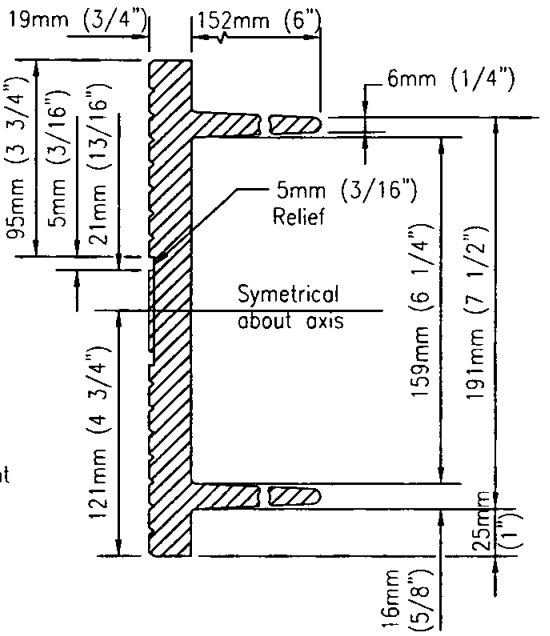

CAST IRON
VALVE WELL CAP

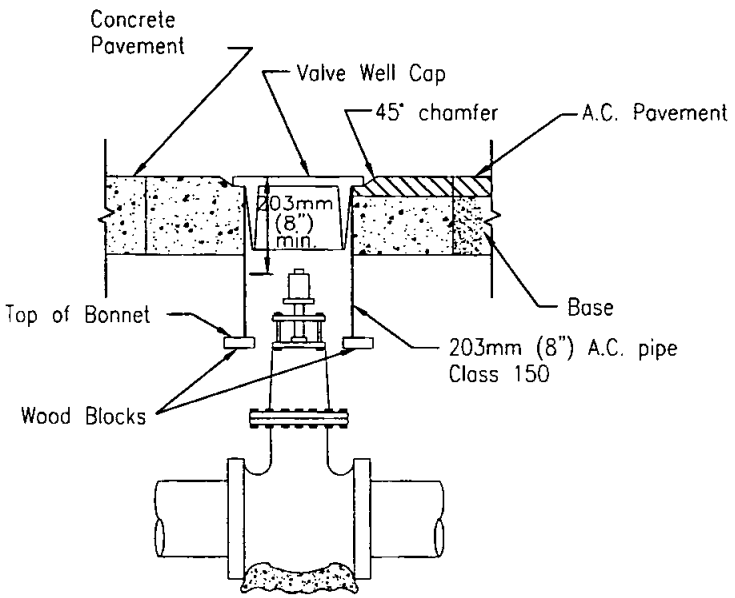

ELEVATION

LEGEND ON PLANS

⊗

Revision	By	Approved	Date
ORIGINAL		Kercheval	12/75
Add Metric		T. Stanton	03/03

SAN DIEGO REGIONAL STANDARD DRAWING

VALVE WELL AND COVER

RECOMMENDED BY THE SAN DIEGO REGIONAL STANDARDS COMMITTEE

T. Stanton 3/10/2003

Chairperson R.C.E. 19246 Date

DRAWING NUMBER I-27

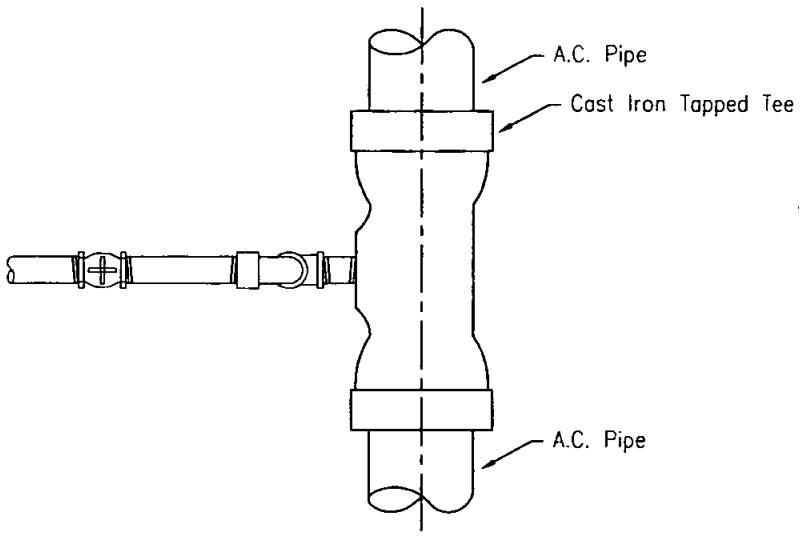

PLAN

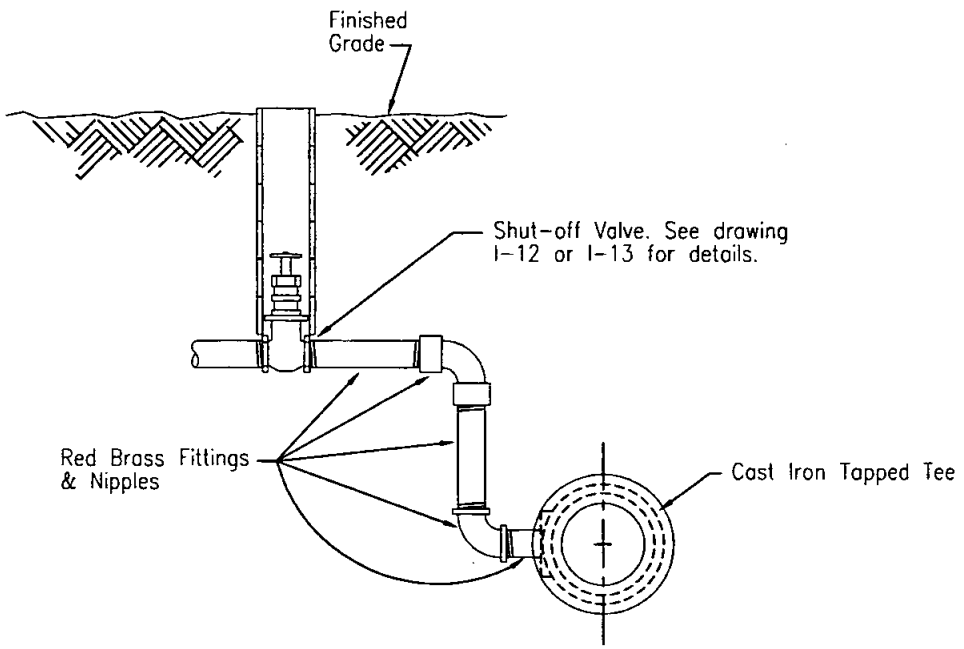

ELEVATION

NOTES

1. Close nipples shall not be used.
2. Cast iron tapped tee shall be short body, class 250, cement mortar lined and polyethylene wrapped.
3. All tapped tees shall have a type – A support block. See Standard Drawing W-19.

LEGEND ON PLANS

⊗

Revision	By	Approved	Date
ORIGINAL		Kercheval	12/75
Add Metric		T. Stanton	03/03

SAN DIEGO REGIONAL STANDARD DRAWING

CONNECTION DETAIL FOR NEW ASBESTOS CEMENT SUPPLY MAINS

RECOMMENDED BY THE SAN DIEGO REGIONAL STANDARDS COMMITTEE

T. Stanton 3/01/2003

Chairperson R.C.E. 19246 Date

DRAWING NUMBER I-28

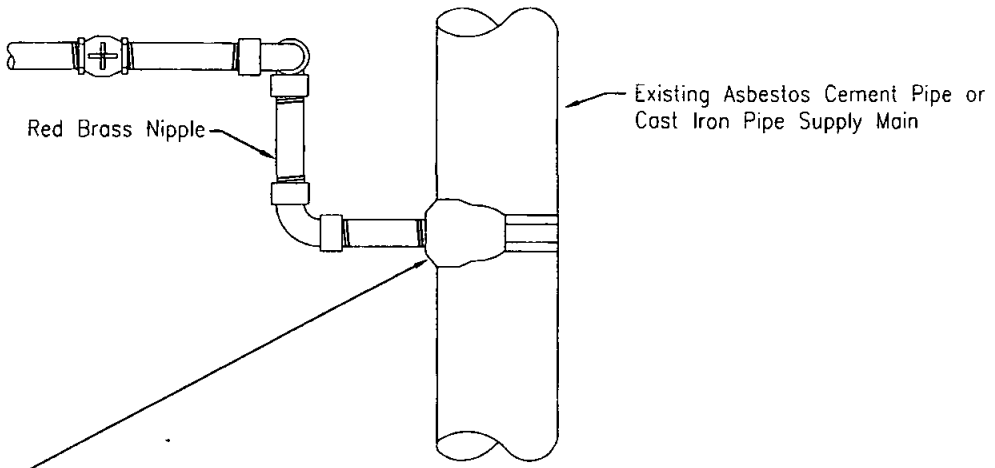

PLAN

May Be: Bronze, double strap service clamp; cast iron tapped clamp coupling with stainless steel bolts; cast iron boltless tapping sleeve; or cast iron (cement mortar lined) cutting in tapped tee.

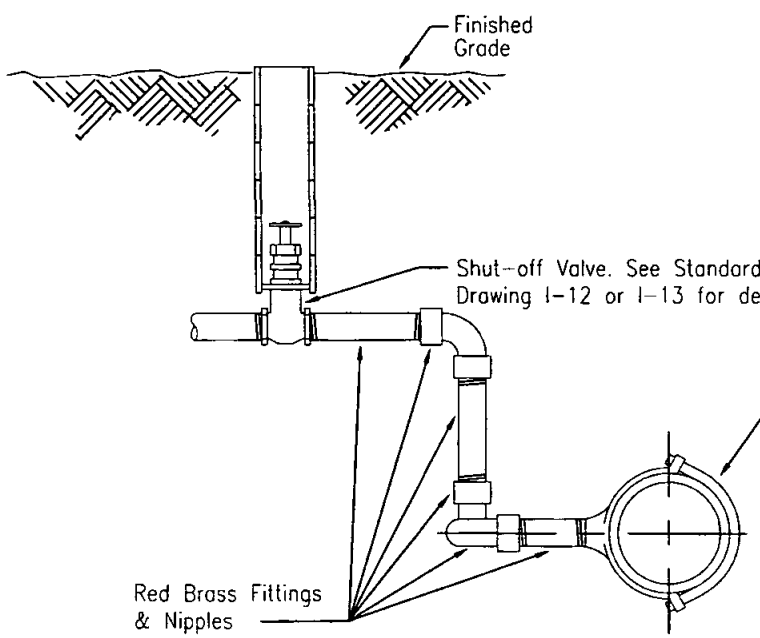

ELEVATION

NOTE
Close nipples shall not be used.

LEGEND ON PLANS

Revision	By	Approved	Date
ORIGINAL		Kercheval	12/75
Add Metric		T. Stanton	03/03

SAN DIEGO REGIONAL STANDARD DRAWING

CONNECTION DETAIL
FOR EXISTING SUPPLY LINES

RECOMMENDED BY THE SAN DIEGO REGIONAL STANDARDS COMMITTEE

T. Stanton 3/10/2003

Chairperson R.C.E. 19246 Date

DRAWING NUMBER I-29

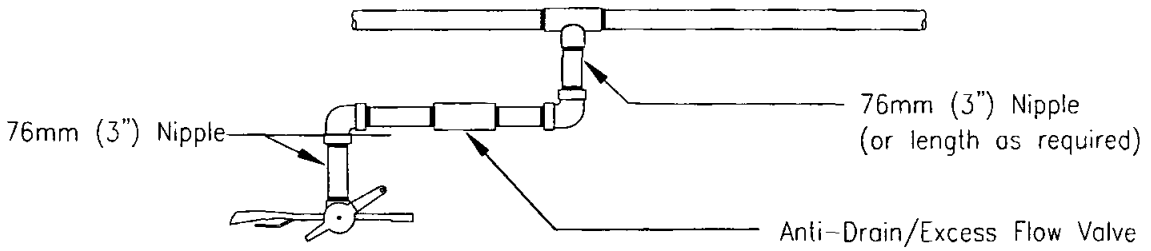

PLAN

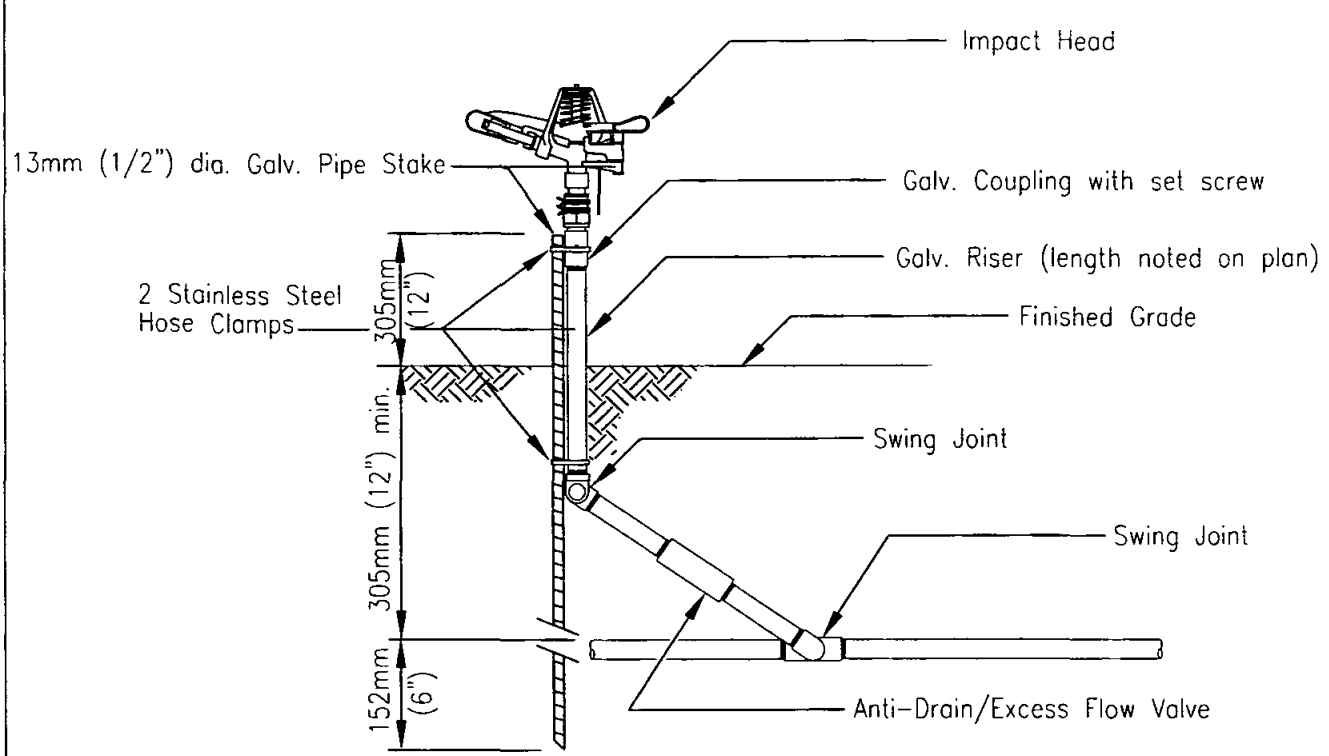

ELEVATION

NOTES

1. All fittings shall be P.V.C. Sch. 40 (except as noted).
2. All nipples shall be P.V.C. Sch. 80 (except as noted).
3. Teflon tape, 19mm (3/4") wide, shall be used on all threaded connections.
4. Short nipples shall not be used.

LEGEND ON PLANS

Show a number to indicate type head

Revision	By	Approved	Date
ORIGINAL		Solomon	7/79
Add Metric		T. Stanton	03/03

SAN DIEGO REGIONAL STANDARD DRAWING

IMPACT HEAD
(WITH SWING JOINT)

RECOMMENDED BY THE SAN DIEGO REGIONAL STANDARDS COMMITTEE

T. Stanton 3/01/2003

Chairperson R.C.E. 19246 Date

DRAWING NUMBER 1-30

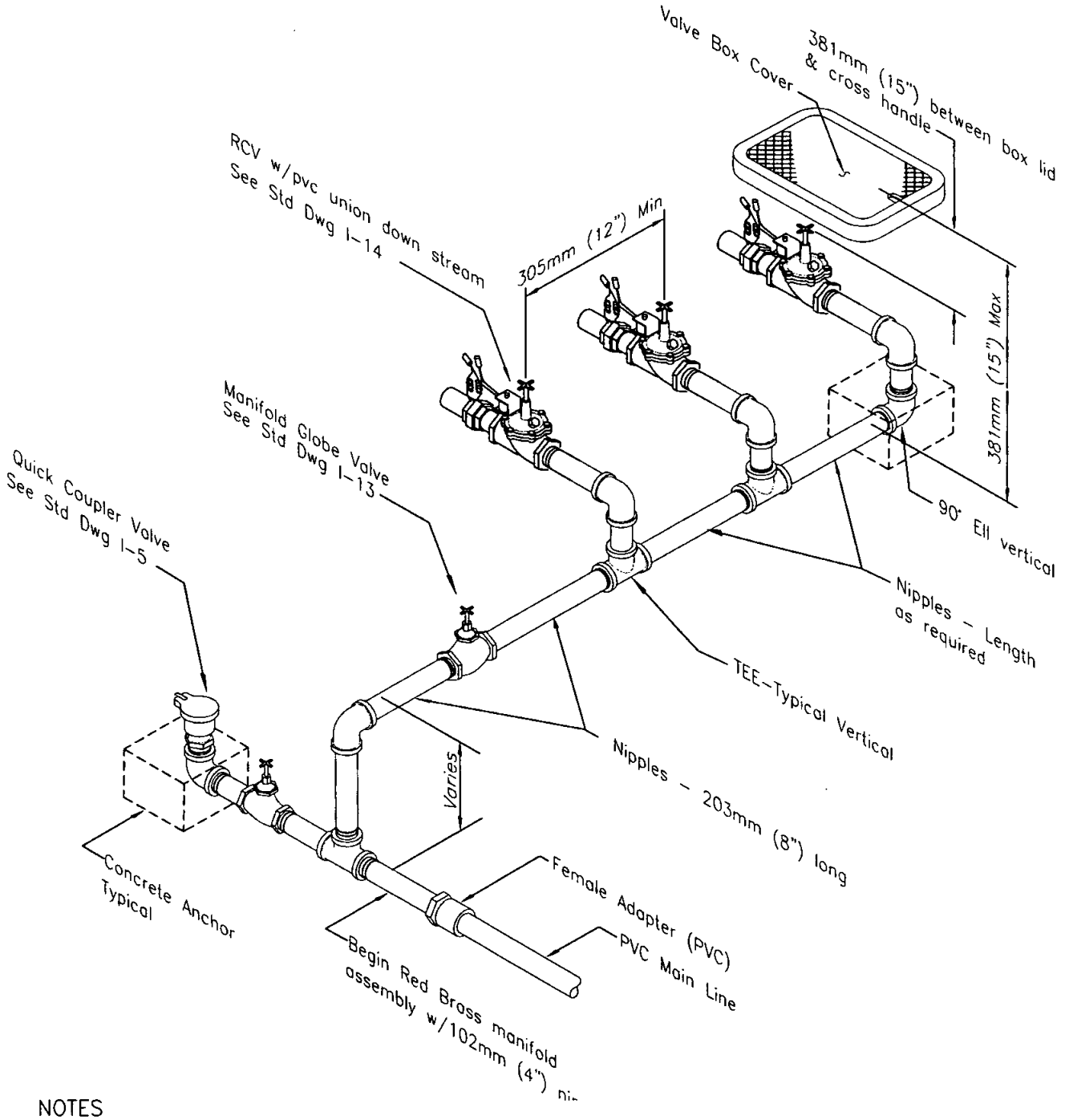

NOTES

1. Typical remote control valve assembly: all nipples and elbows are to be red brass.
2. Install largest remote control valve adjacent to gate valve and maintain uniform decrease.
3. Close nipples are not allowed.
4. Install individual valve boxes for each remote control valve.
5. Locations of quick coupler valves shall be as shown on plans.
6. Tee vertically from main line intersection to reach the 381mm (15") maximum depth.

Revision	By	Approved	Date
ORIGINAL		Parkinson	5/92
Add Metric		T. Stanton	03/03

SAN DIEGO REGIONAL STANDARD DRAWING

REMOTE CONTROL VALVE MANIFOLD ASSEMBLY

RECOMMENDED BY THE SAN DIEGO REGIONAL STANDARDS COMMITTEE

T. Stanton 3/10/2003

Chairperson R.C.E. 19246 Date

DRAWING NUMBER I-33

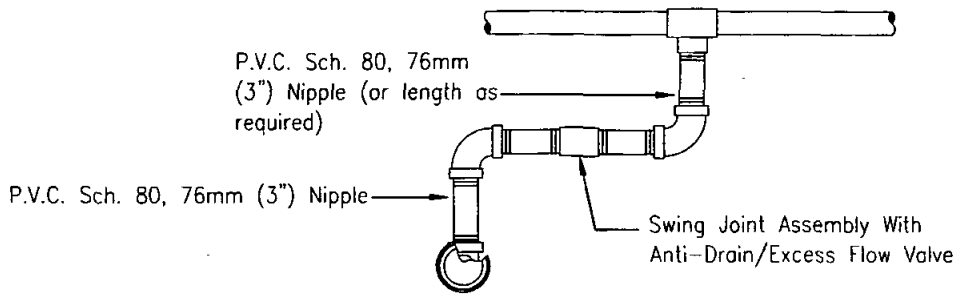

PLAN

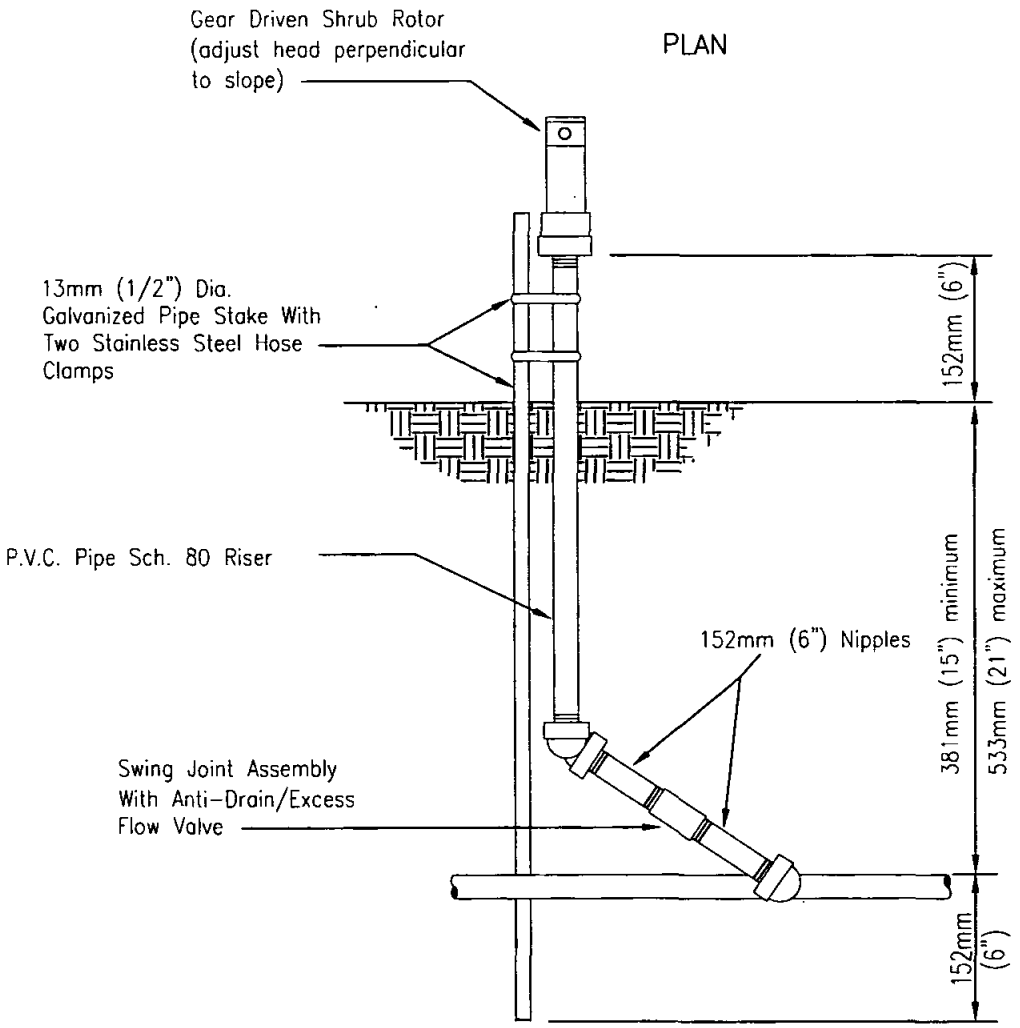

ELEVATION

NOTES

1. All fittings shall be P.V.C. Sch. 40 (except as noted).
2. All nipples shall be P.V.C. Sch. 80 (except as noted).
3. Teflon tape, 19mm (3/4") wide, shall be used on all threaded connections.
4. Short nipples shall not be used.

LEGEND ON PLANS

Show a number to indicate head type

Revision	By	Approved	Date
ORIGINAL		Parkinson	5/92
Add Metric		T. Stanton	03/03

SAN DIEGO REGIONAL STANDARD DRAWING

SHRUB SPRINKLER HEAD
ROTARY TYPE

RECOMMENDED BY THE SAN DIEGO REGIONAL STANDARDS COMMITTEE

T. Stanton 3/10/2003

Chairperson R.C.E. 19246 Date

DRAWING NUMBER 1-34

LANDSCAPING

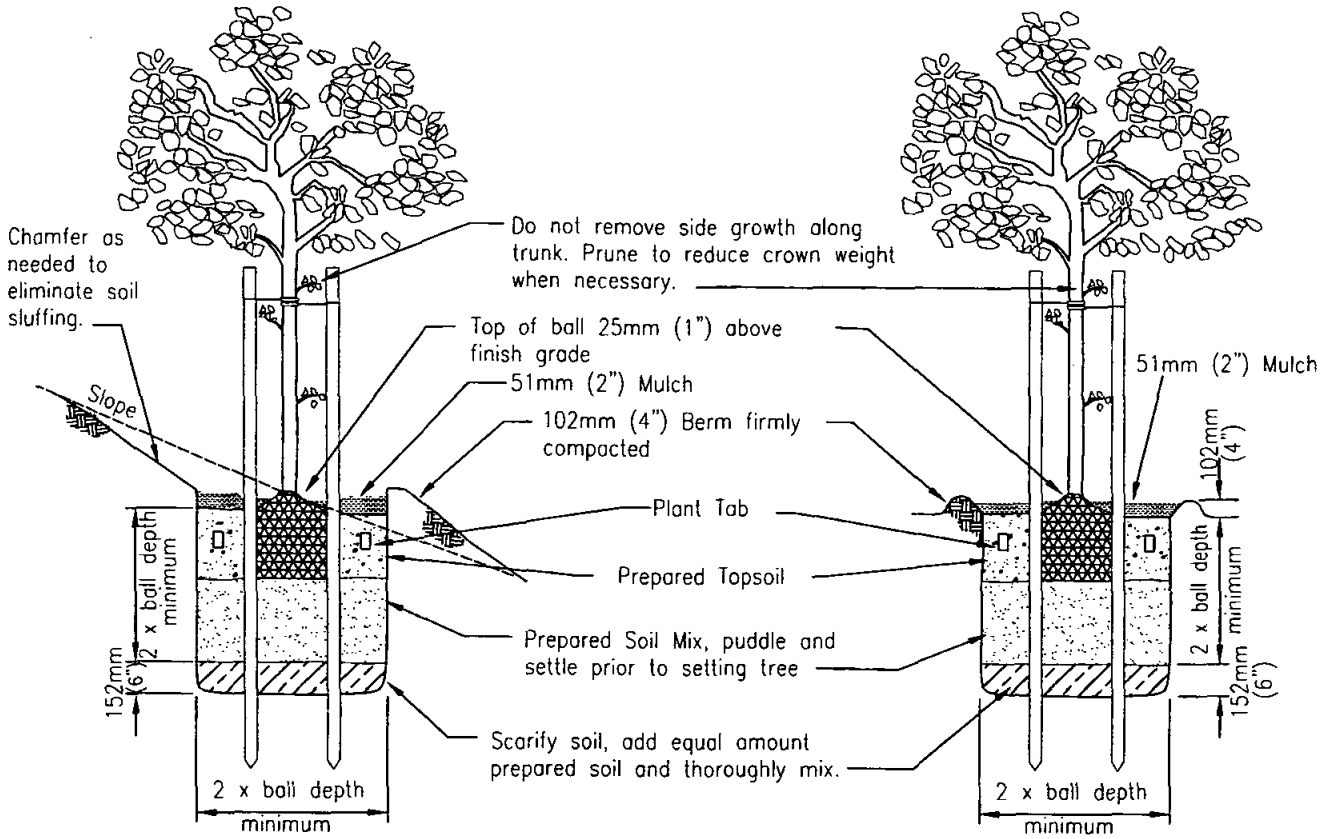

TREE PLANTING – SLOPES

TREE PLANTING – LEVEL GROUND

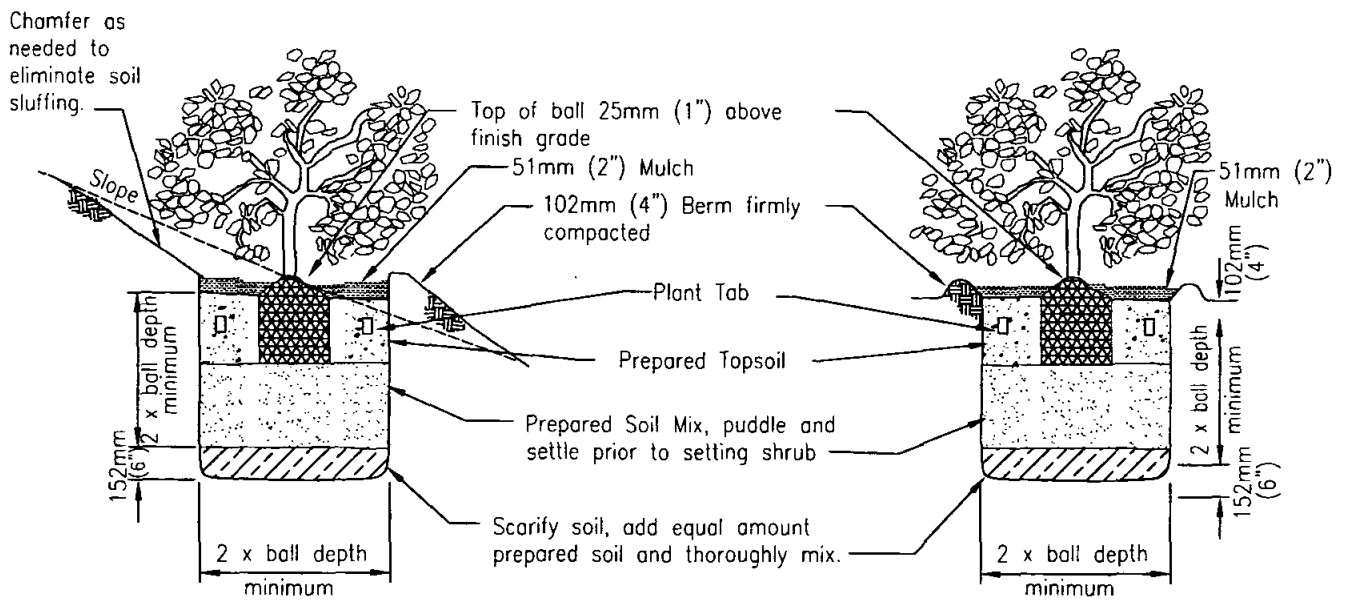

SHRUB PLANTING – SLOPES

SHRUB PLANTING – LEVEL GROUND

Revision	By	Approved	Date	SAN DIEGO REGIONAL STANDARD DRAWING	RECOMMENDED BY THE SAN DIEGO REGIONAL STANDARDS COMMITTEE
ORIGINAL		Kercheval	12/75		
Add Metric		T. Stanton	03/03	TREE AND SHRUB PLANTING	T. Stanton 3/01/2003
					Chairperson R.C.E. 19246 Date
					DRAWING NUMBER L-1

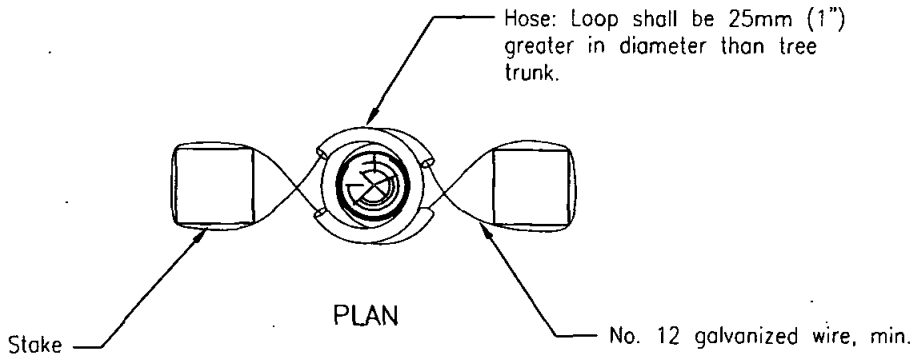

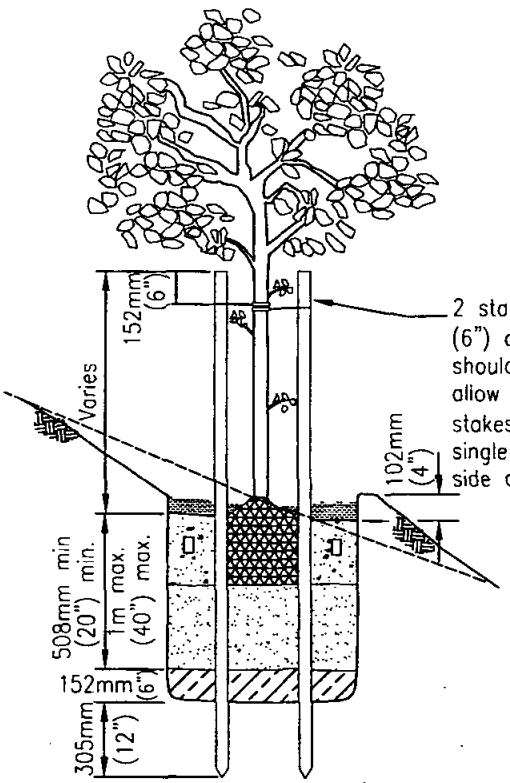

2 stakes and 2 ties. Tie tree trunk 152mm (6") above bending moment of tree. Tie should provide flexibility of trunk but not allow rubbing of trunk against stake. Cut stakes off 152mm (6") above ties. For single stake trees, place stake on windward side of tree.

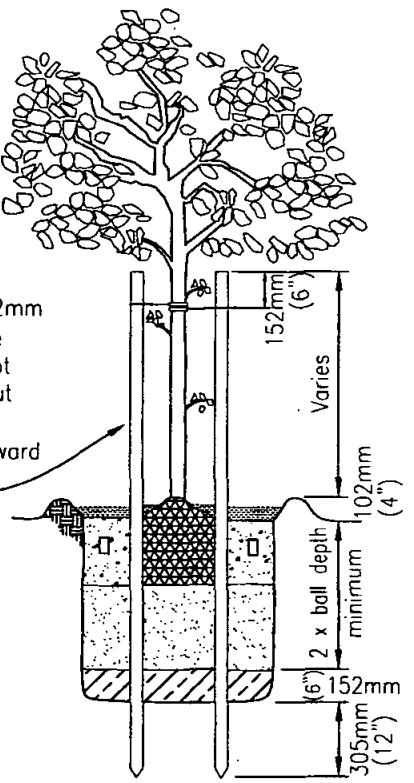

TREE STAKING – SLOPES

TREE STAKING – LEVEL GROUND

Revision	By	Approved	Date
ORIGINAL		Kercheval	12/75
Add Metric		T. Stanton	03/03

SAN DIEGO REGIONAL STANDARD DRAWING

TREE STAKING

RECOMMENDED BY THE SAN DIEGO REGIONAL STANDARDS COMMITTEE

T. Stanton 3/10/2003

Chairperson R.C.E. 19246 Date

DRAWING NUMBER L-2

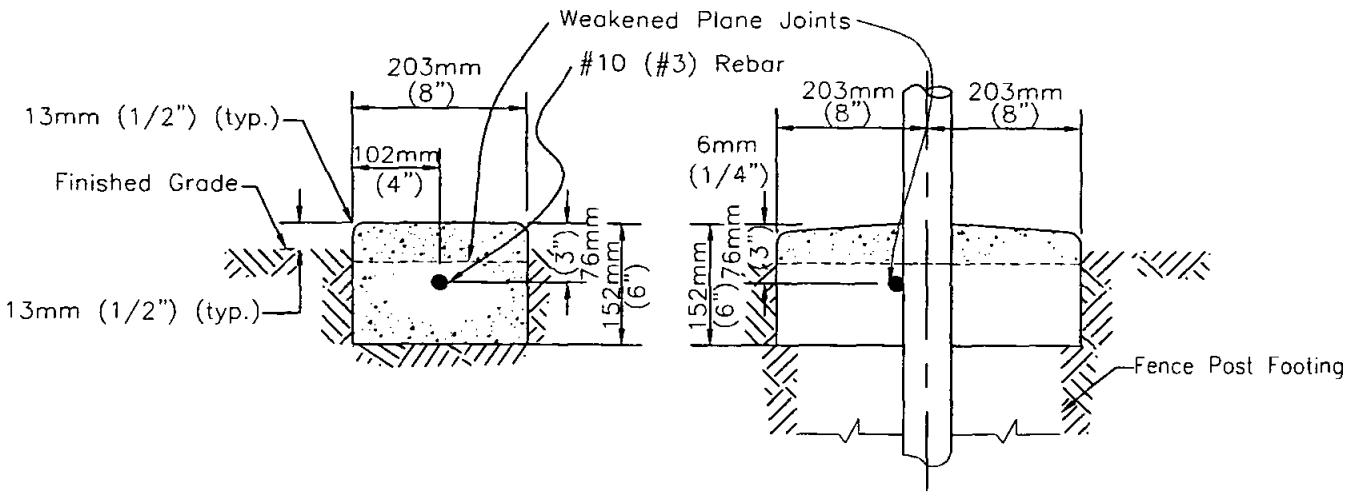

TYPE A
SHRUB AREA

TYPE B
UNDER FENCES

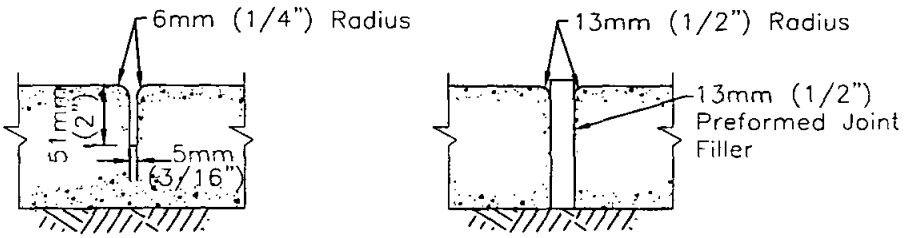

WEAKENED PLANE JOINT
Max. 6m (20') O.C.

EXPANSION JOINT
Max. 36.6m (120') O.C.

NOTES

1. Rebar shall be continuous with 305mm (12") overlap at splices.
2. Concrete shall be class **308kg/M^3 –C–17–Mpa** (520–C2500) and same color as any adjacent concrete.
3. Install weakened plane joints at each fence post.
4. Install expansion joints where the mowing strip abuts any concrete improvement.

Revision	By	Approved	Date
ORIGINAL		H.Hecht	10/82
Add Metric		T. Stanton	03/03

SAN DIEGO REGIONAL STANDARD DRAWING

CONCRETE MOWING STRIP

RECOMMENDED BY THE SAN DIEGO REGIONAL STANDARDS COMMITTEE

T. Stanton 3/10/2003

Chairperson R.C.E. 19246 Date

DRAWING NUMBER L-3

NOTES:
1. The location and species of each tree shall have prior approval of the Agency.
2. Sidewalk to be removed for each tree planting shall be saw cut full depth.
3. Fill below grate with 19mm (3/4") x No.4 clean crushed rock. If the grate is used for security, all bolts, nuts and washers shall be hot dipped galvanized. All steel items shall be hot dipped galvanized after fabrication.
4. Grate shall be two separate pieces, 610mm x 1.2m (2'x4') in size, unless otherwise specified on the plans. Slot openings in grate design shall have 10mm (3/8") maximum width. Grates are to be designed in accordance with the latest edition of the Uniform Building Code, with a minimum uniform live load of 250 pounds per square foot in sidewalks, and have a method of symmetrical interior expandable rings/openings (detailed on the plans) as selected and approved by the agency.
5. Immediate notification shall be given to the Engineer of any below grade improvements encountered.

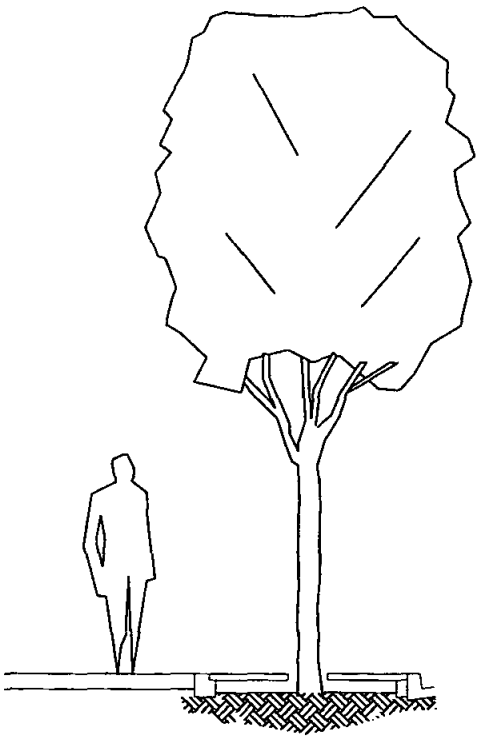

TREE SIZE

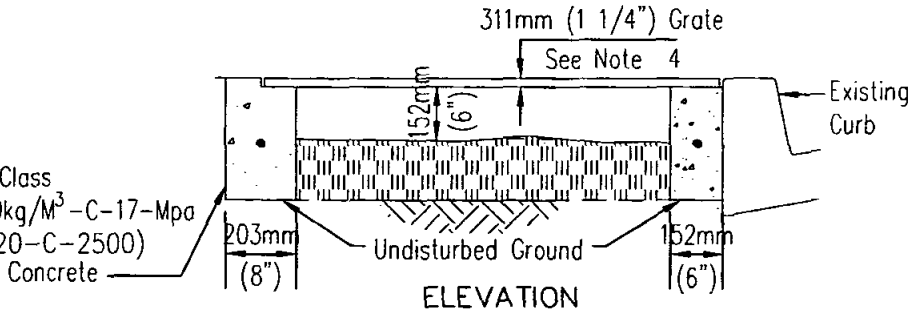

ELEVATION

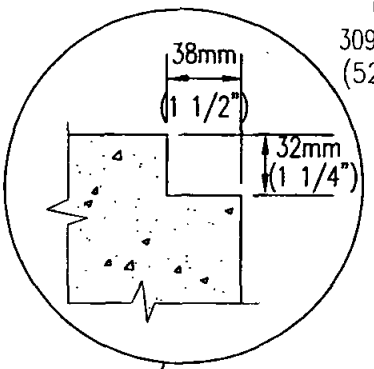

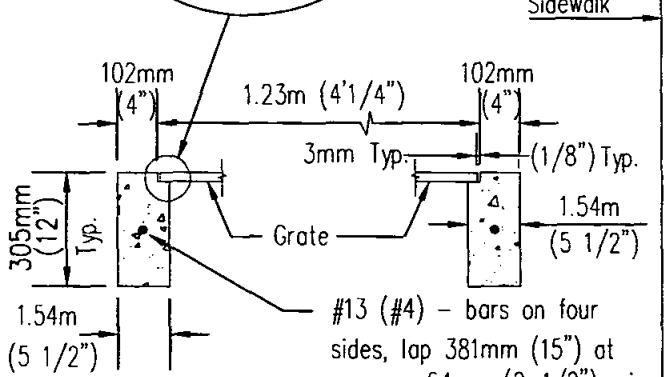

SECTION A-A

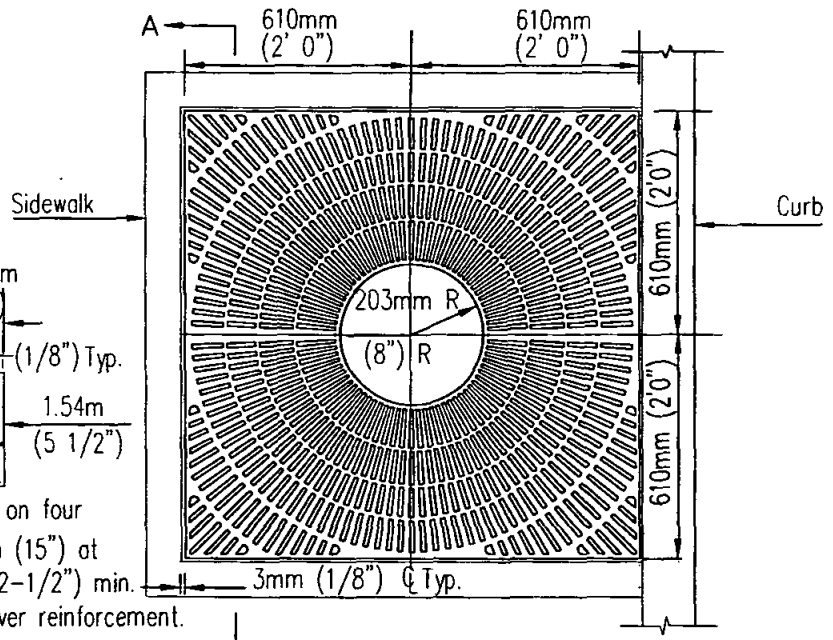

PLAN

Revision	By	Approved	Date
ORIGINAL		Parkinson	5/92
Add Metric		T. Stanton	03/03

SAN DIEGO REGIONAL STANDARD DRAWING

STEEL GRATE
TREE WELL COVER

RECOMMENDED BY THE SAN DIEGO REGIONAL STANDARDS COMMITTEE

T. Stanton 3/10/2003

Chairperson R.C.E. 19246 Date

DRAWING NUMBER L-4

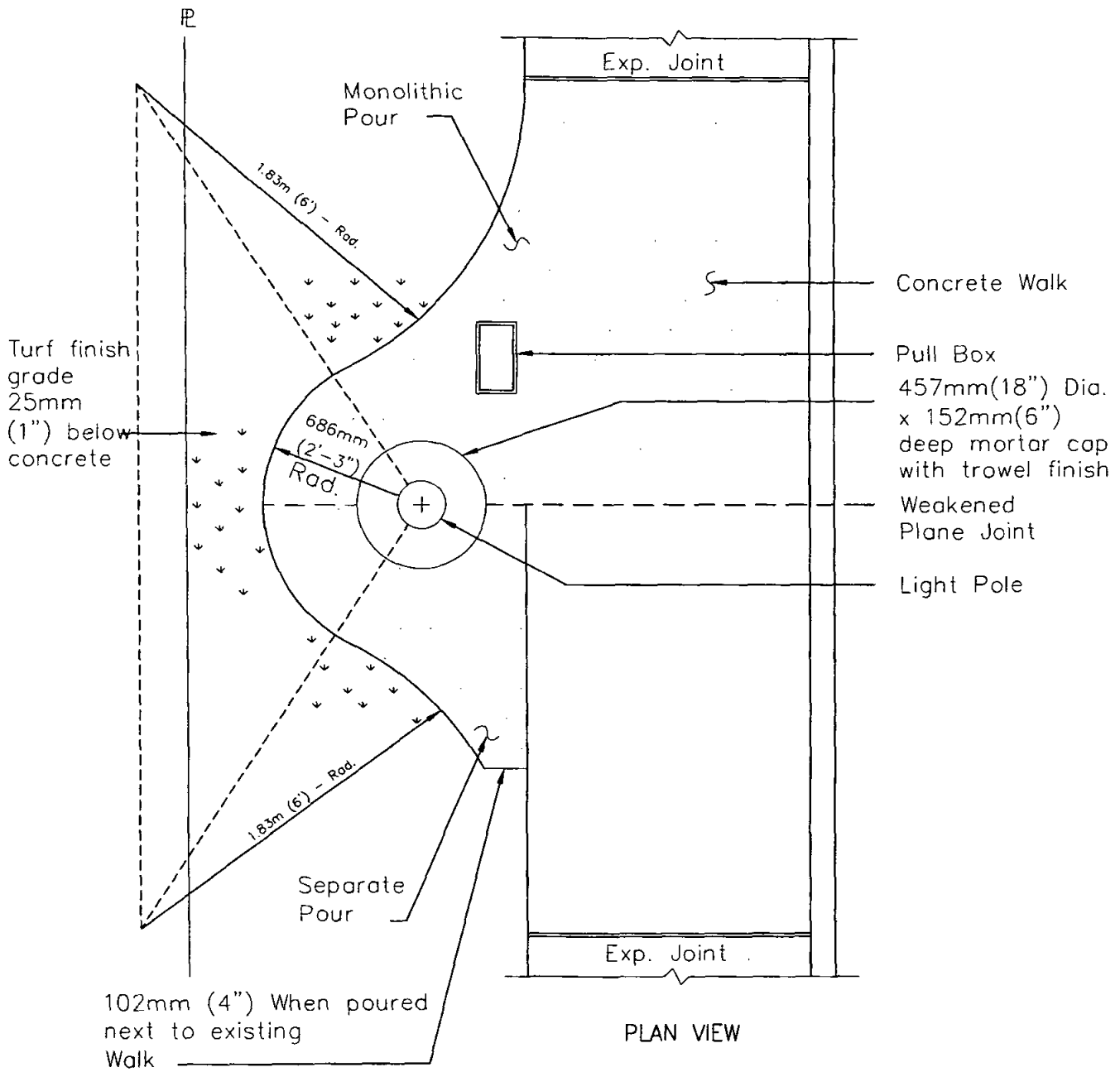

NOTES

1. See Electric Plans for fixture/pole/footing details.
2. Use monolithic pour for new construction.
3. Poles shall be 1.83m (6'-0") from face of curb where applicable.
4. Pole pads shall drain at 2% minimum in same direction as sidewalk.
5. Concrete pad shall be the same as specified for sidewalk.

Revision	By	Approved	Date
ORIGINAL		Parkinson	9/88
Add Metric		T. Stanton	03/03

SAN DIEGO REGIONAL STANDARD DRAWING

LIGHT POLE PAD IN TURF AREAS

RECOMMENDED BY THE SAN DIEGO REGIONAL STANDARDS COMMITTEE

T. Stanton 3/10/2003

Chairperson R.C.E. 19246 Date

DRAWING NUMBER L-5

MISCELLANEOUS

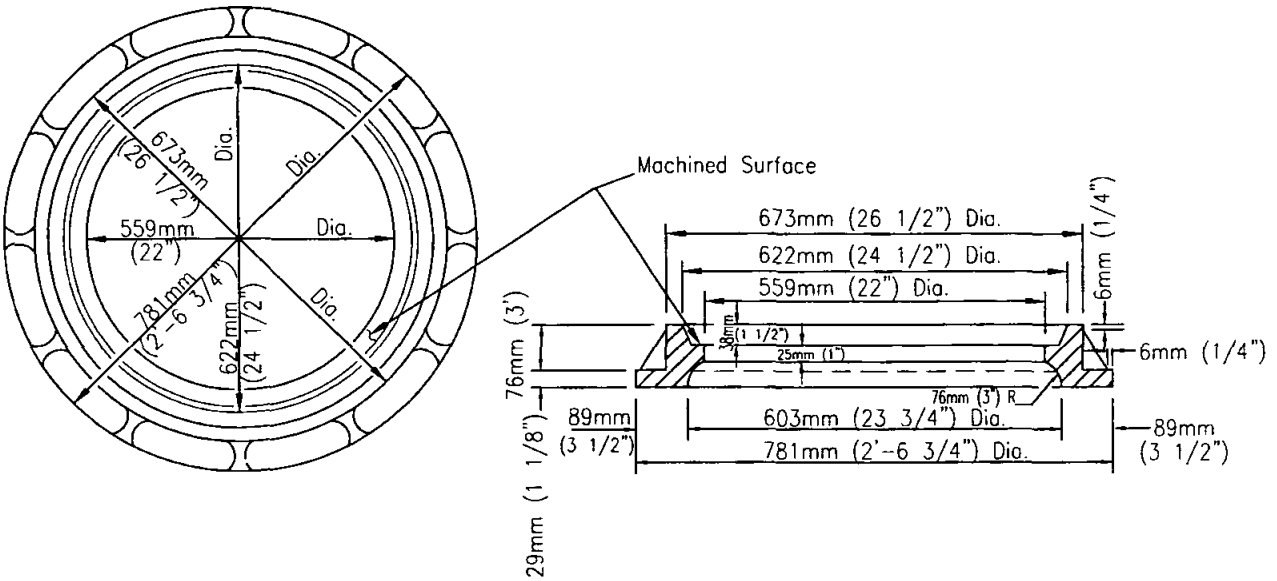

MANHOLE COVER FRAME

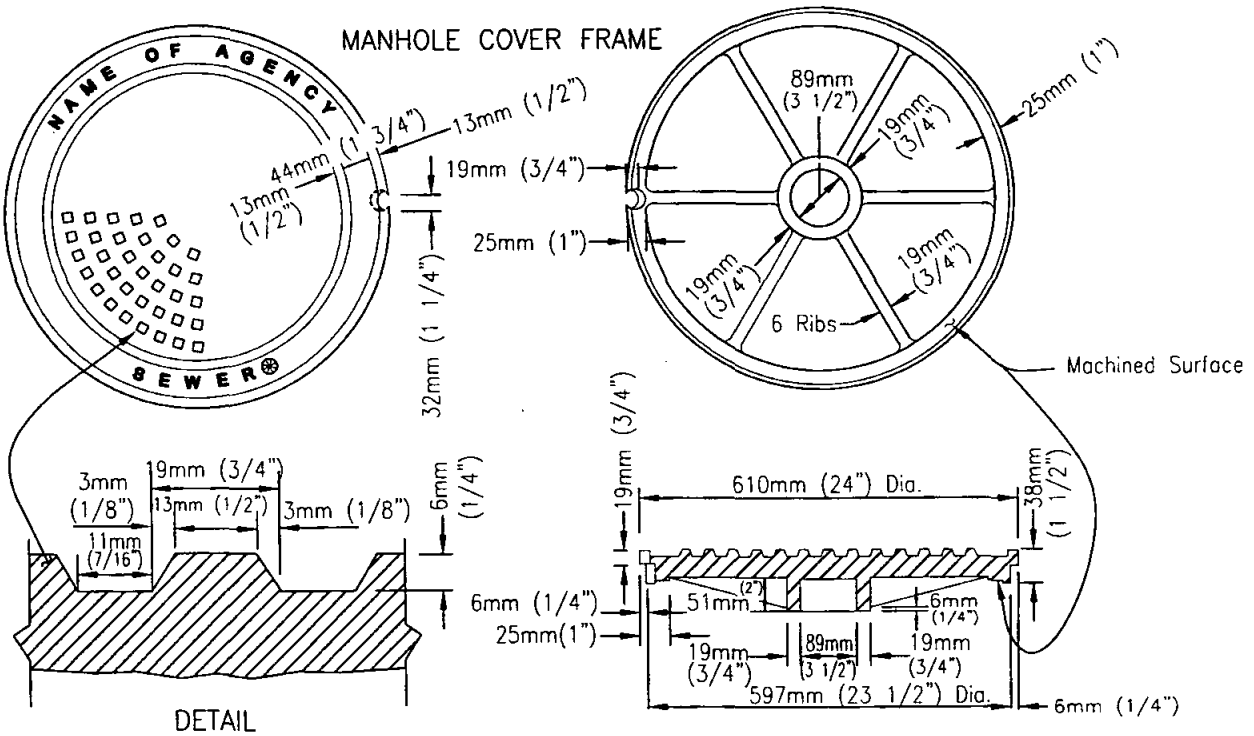

DETAIL

MANHOLE COVER

NOTES

1. Frame and cover shall be cast iron. Cast iron shall conform to ASTM 48, Class 35B.
2. Weights: Frame 75.3kg (166) – 87.6kg (193)lbs.
   Cover 67.7kg (147) – 77.6kg (171)lbs.
3. Machine all matching surfaces and seats of frame and cover to prevent rocking.
4. Imported frames and covers shall have the country of origin marked in compliance with federal regulations.

⊛

FOR	MARK
Sewer Projects	Sewer
Storm Drain Projects	Storm Drain
Water Projects	Water

Revision	By	Approved	Date
ORIGINAL		Kercheval	12/75
Add Metric		T. Stanton	03/03

SAN DIEGO REGIONAL STANDARD DRAWING

.61m (24") MANHOLE FRAME AND COVER HEAVY DUTY

RECOMMENDED BY THE SAN DIEGO REGIONAL STANDARDS COMMITTEE

T. Stanton 3/10/2003

Chairperson R.C.E. 19246 Date

DRAWING NUMBER M-1

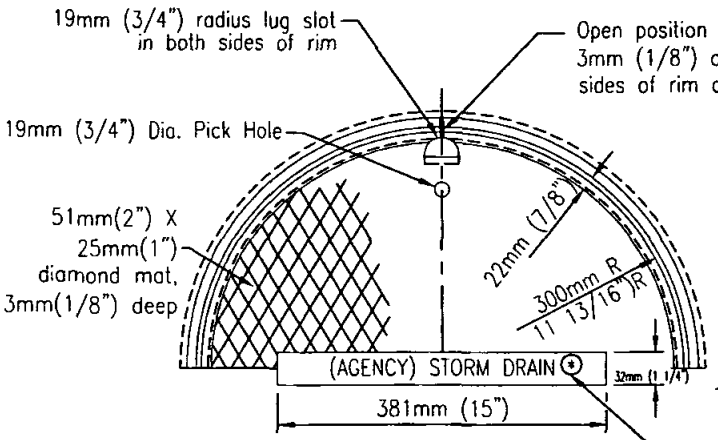

TOP OF FRAME & COVER

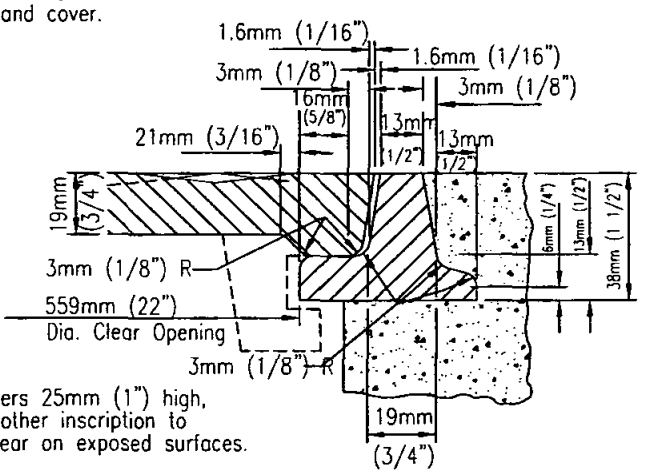

Letters 25mm (1") high, no other inscription to appear on exposed surfaces.

SECTION THROUGH RIM

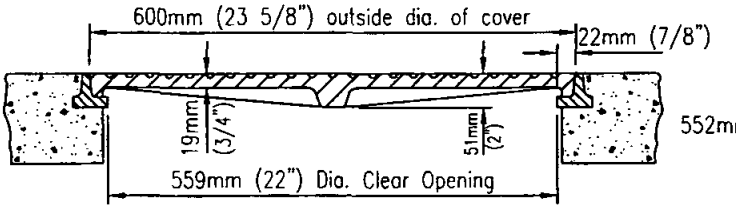

SECTION THROUGH FRAME & COVER

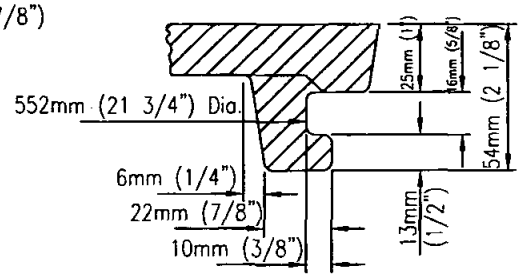

SECTION THROUGH LUG

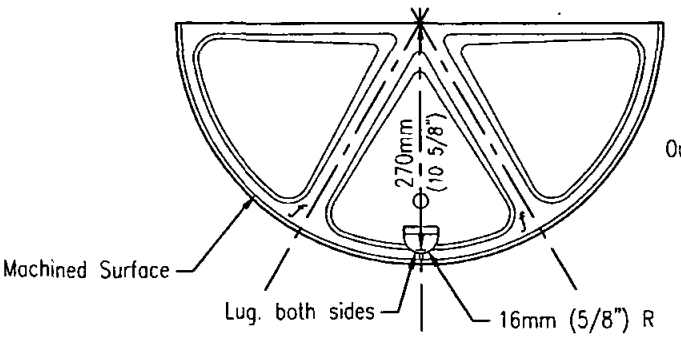

BOTTOM OF COVER

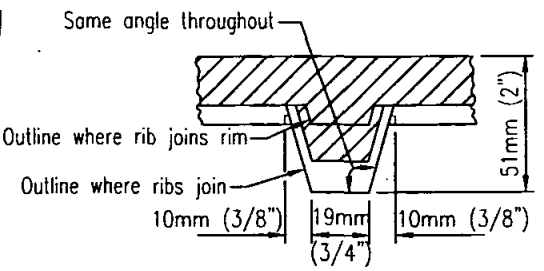

SECTION THROUGH RIB AT MID RADIUS

NOTES

1. Frame and cover shall be cast iron. Cast iron shall conform to ASTM 48, Class 30.
2. Frame and cover for use in non-traffic area only.
3. Weights: Frame 13.2kg (29) – 15kg (33) lbs.
   Cover 43kg (95) – 50kg (110) lbs.
4. Imported frames and covers shall have the country of origin marked in compliance with federal regulations.

⊛

FOR	MARK
Sewer Projects	Sewer
Storm Drain Projects	Storm Drain
Water Projects	Water

Revision	By	Approved	Date
ORIGINAL		Kercheval	12/75
Add Metric		T. Stanton	03/03

SAN DIEGO REGIONAL STANDARD DRAWING

.61m (24") MANHOLE FRAME AND COVER LIGHT DUTY

RECOMMENDED BY THE SAN DIEGO REGIONAL STANDARDS COMMITTEE

T. Stanton 3/10/2003

Chairperson R.C.E. 19246 Date

DRAWING NUMBER M-2

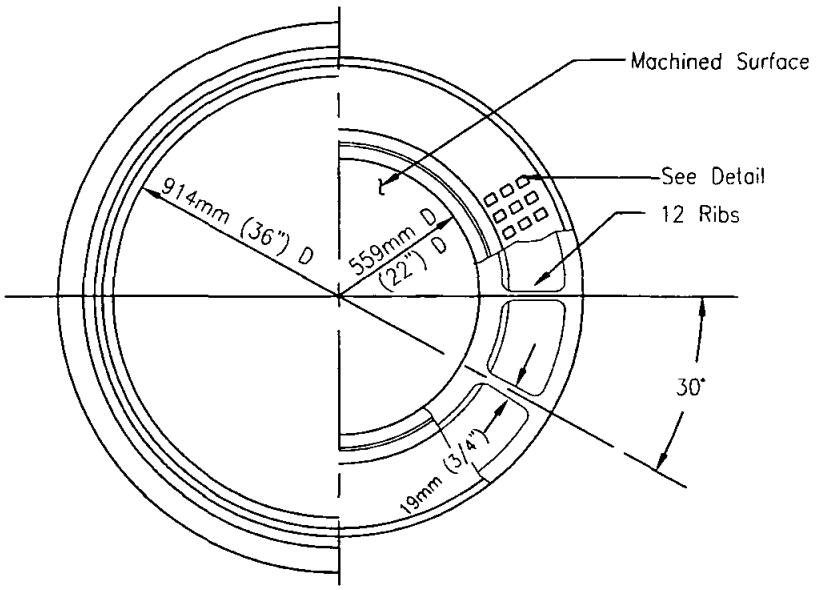

HALF PLAN FRAME & COVER

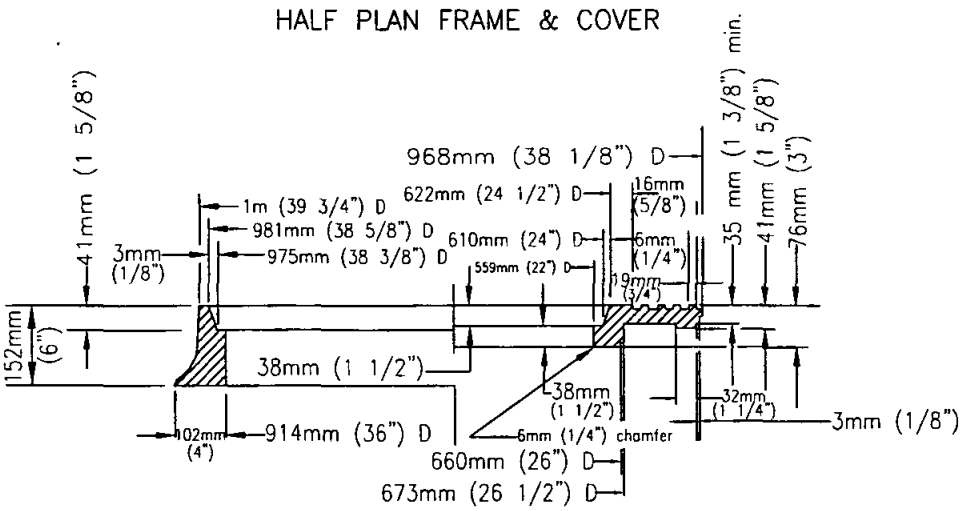

HALF SECTION FRAME & COVER

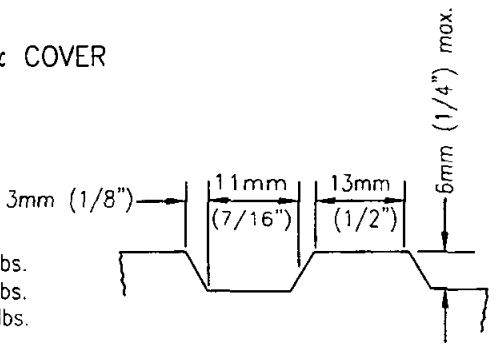

DETAIL

NOTES

1. Frame and cover shall be cast iron. Cast iron shall conform to ASTM 48, Class 35B.
2. Weights:

Frame	142.4kg (314)	–	164.6kg (363) lbs.
Outer Cover	129.3kg (285)	–	149.7kg (330) lbs.
Inner Cover	66.7kg (147)	–	77.5kg (171) lbs.

3. Machine all matching surfaces and seats of frame and cover to prevent rocking.
4. Imported frames and covers shall have the country of origin marked in compliance with federal regulations.

Revision	By	Approved	Date
ORIGINAL		Kercheval	12/75
Add Metric		T. Stanton	03/03

SAN DIEGO REGIONAL STANDARD DRAWING

914mm (36") MANHOLE FRAME AND TWO CONCENTRIC COVERS HEAVY DUTY

RECOMMENDED BY THE SAN DIEGO REGIONAL STANDARDS COMMITTEE

T. Stanton 3/10/2003

Chairperson R.C.E. 19246 Date

DRAWING NUMBER M-3

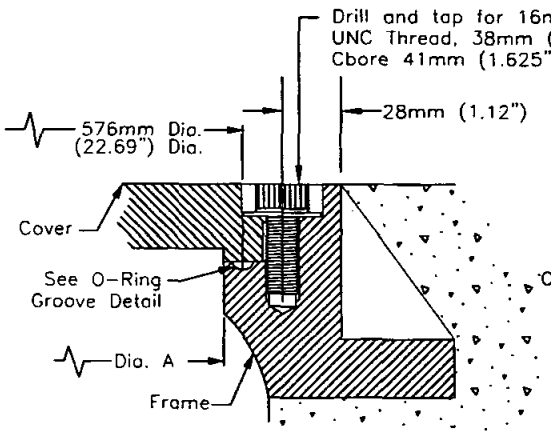

M-1 Detail:
COVER TO FRAME

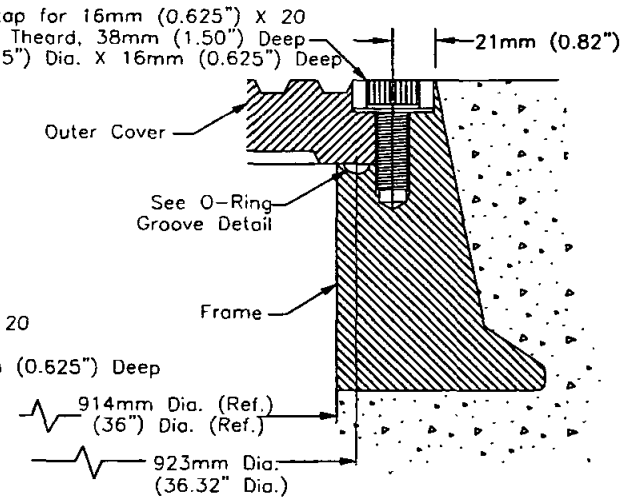

M-3B Detail:
OUTER COVER TO FRAME

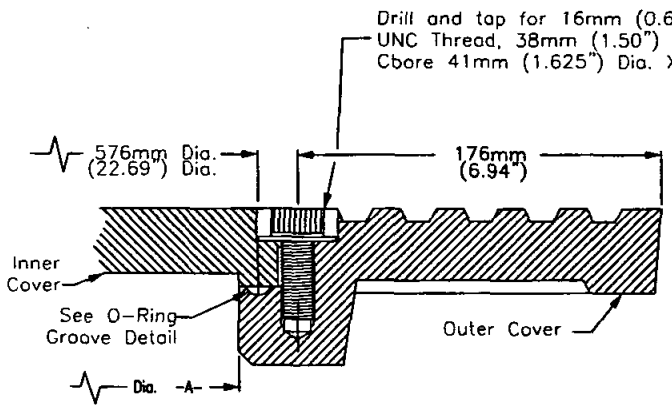

M-3A Detail:
INNER COVER TO OUTER COVER

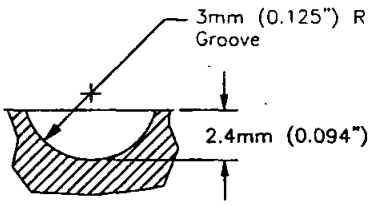

NEOPRENE O-RING
GROOVE DETAIL

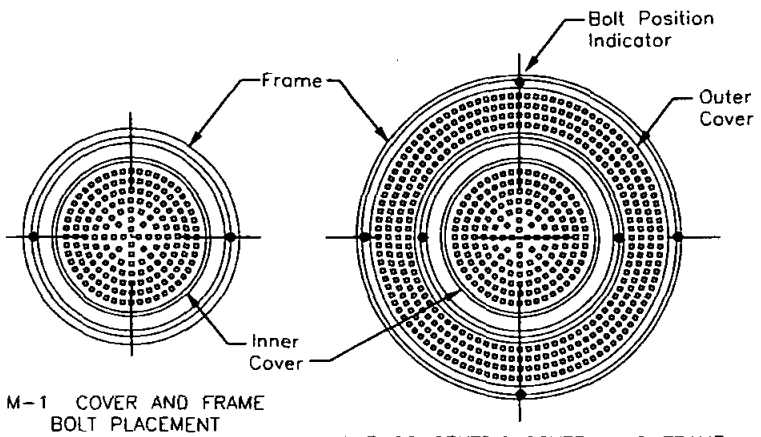

M-1 COVER AND FRAME
BOLT PLACEMENT
(See Note 3)

M-3 CONCENTRIC COVERS AND FRAME
BOLT PLACEMENT
(See Note 3)

NOTES:

1. 16mm (0.625") X 20 UNC THREAD, 316 STAINLESS STEEL SOCKET HEAD CAP SCREW AND 38mm (1.50") O.D. X 17mm (0.687") I.D. X 0.078 THICK 316 STAINLESS STEEL WASHER.
2. 6mm (0.25") NEOPRENE O-RING GASKET SHALL BE GLUED INTO MACHINED GROOVE. GLUE SHALL MEET THE REQUIREMENTS OF MIL-M-81288 (AMEND. 1)
3. BOLTDOWN PATTERNS:
   - M-1 DETAIL (610mm (24") COVER & FRAME): INSTALL TWO (2) BOLTS AT 180 DEGREES.
   - M-3A DETAIL (CONCENTRIC COVERS): BETWEEN INNER AND OUTER COVERS INSTALL TWO (2) BOLTS AT 180 DEGREES.
   - M-3B DETAIL (OUTER COVER & FRAME): BETWEEN OUTER COVER & FRAME INSTALL FOUR (4) BOLTS AT 90 DEGREES.

Revision	By	Approved	Date
ORIGINAL		Parkinson	2/95
Add Metric		T. Stanton	03/03

SAN DIEGO REGIONAL STANDARD DRAWING

MANHOLE COVER - LOCKING DEVICE

RECOMMENDED BY THE SAN DIEGO REGIONAL STANDARDS COMMITTEE

T. Stanton 3/01/2003

Chairperson R.C.E. 19246 Date

DRAWING NUMBER M-4

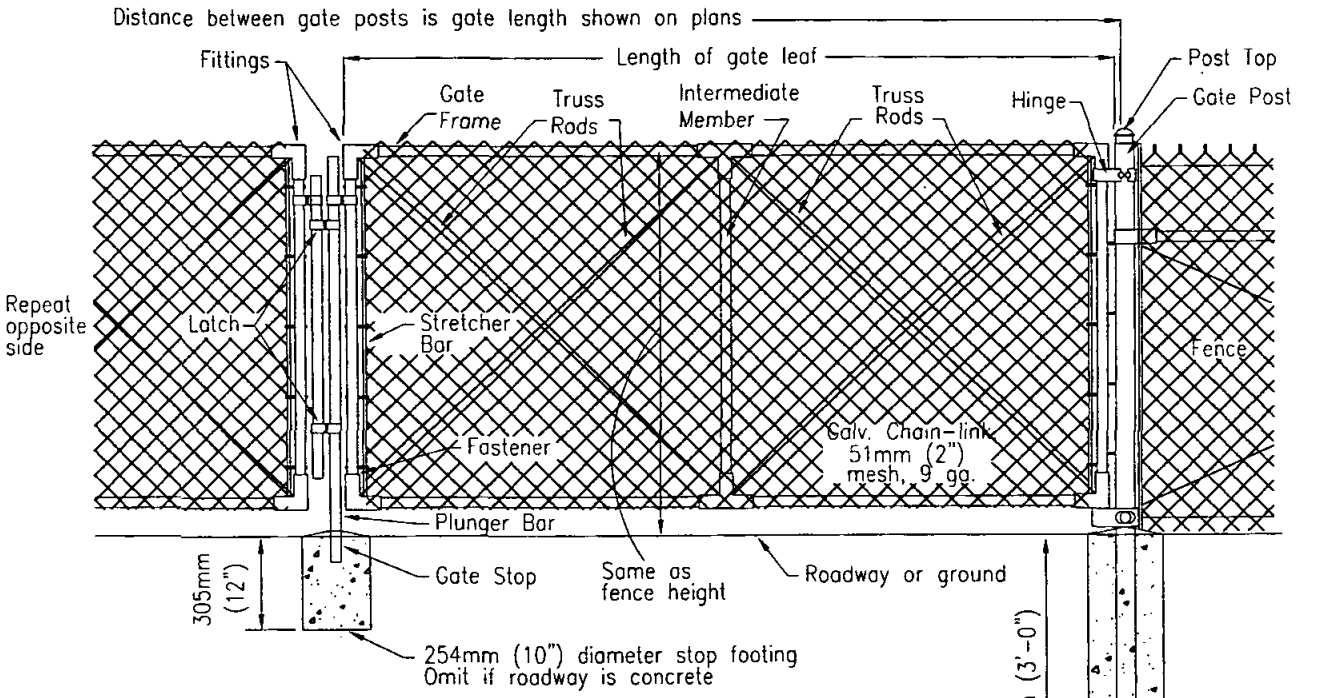

HALF ELEVATION DOUBLE SWING GATE

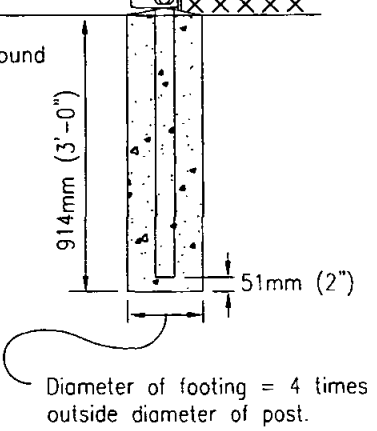

NOTES

1. All footings shall be **309kg/M^3-C-22-Mpa** (520-C-2500) concrete.
2. The following items shall be furnished and installed only when shown on the plans and/or called for in the special provisions:
   a. Barbed wire
   b. Extension post
3. Chain link fence shall conform to Section 206-6 of the Standard Specification for Public Works Construction unless specifically noted on this drawing.

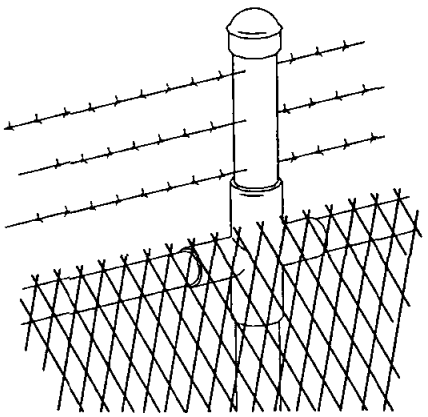

EXTENSION POST AND BARBED WIRE

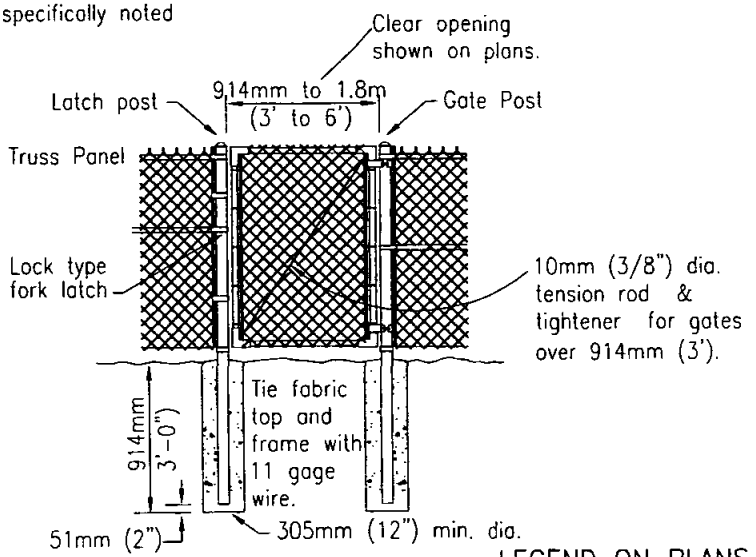

WALK GATE

LEGEND ON PLANS

Revision	By	Approved	Date
ORIGINAL		A.Kercheval	12/75
Add Metric		T. Stanton	03/03

SAN DIEGO REGIONAL STANDARD DRAWING

CHAIN LINK GATE

RECOMMENDED BY THE SAN DIEGO REGIONAL STANDARDS COMMITTEE

T. Stanton 3/01/2003

Chairperson R.C.E. 19246 Date

DRAWING NUMBER M-5

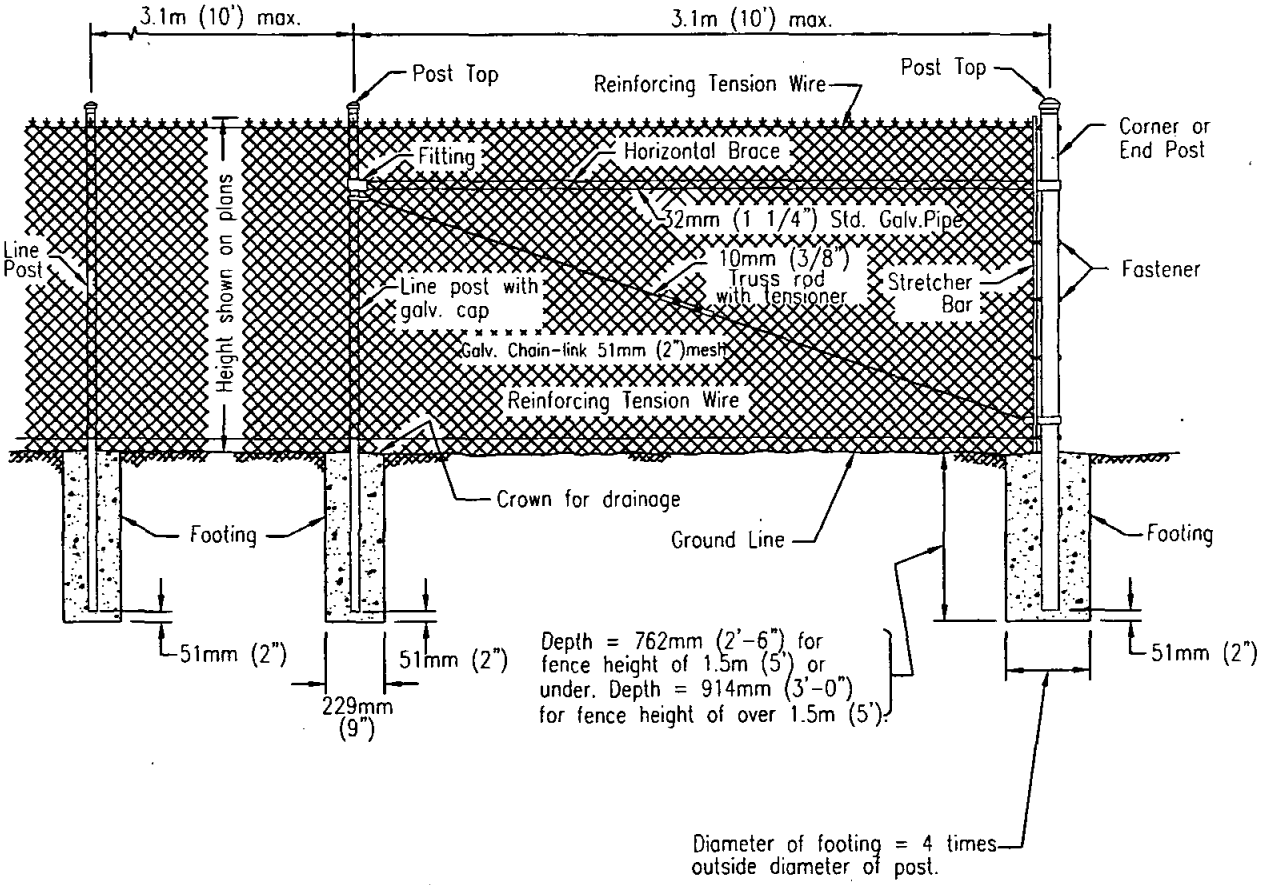

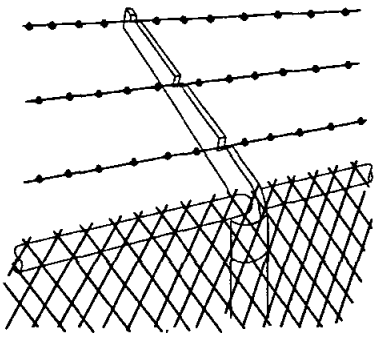

EXTENSION ARM AND BARBED WIRE

NOTES

1. All footings shall be 309kg/M^3-C-22-Mpa (520-C-2500) concrete.
2. The following items shall be furnished and installed only when shown on the plans and/or called for in the special provisions.
   a. Barbed Wire
   b. Extension Arm
   c. Top Horizontal Rail
3. Chain link fence shall conform to Section 206-6 of the Standard Specifications for Public Works Construction unless specifically noted on this drawing.
4. See Standard Drawing M-20 for additional details.

LEGEND ON PLANS

—○—×—×—×—○—

Revision	By	Approved	Date
ORIGINAL		A.Kercheval	12/75
Add Metric		T. Stanton	03/03

SAN DIEGO REGIONAL STANDARD DRAWING

CHAIN LINK FENCE

RECOMMENDED BY THE SAN DIEGO REGIONAL STANDARDS COMMITTEE

T. Stanton 3/10/2003

Chairperson R.C.E. 19246 Date

DRAWING NUMBER M-6

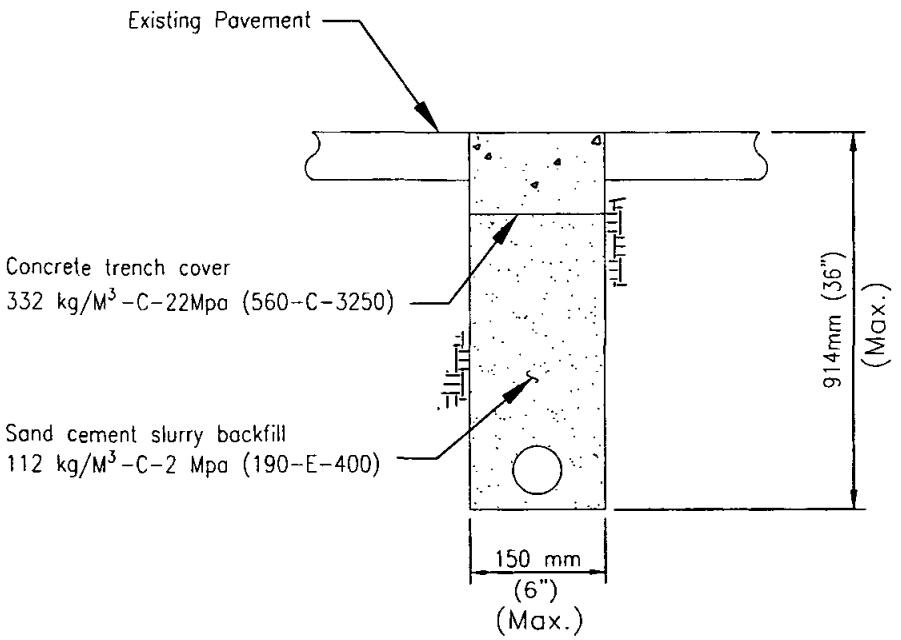

NOTES

1. Concrete encasement or sand cement slurry backfill shall have a minimum slump of 102mm (4").
2. Sand cement slurry backfill shall be thoroughly consolidated to encase conduits. Tampers or vibrators shall be used.
3. Concrete shall be screeded off to match pavement grade and floated to assure proper edge match.
4. Existing pavement will not require saw cutting when using rockwheel for excavation except when the existing pavement is concrete and trench finish is concrete.
5. All cuts shall be parallel or perpendicular to street centerline, when practical.
6. Allow concrete backfill or concrete trench cover 7 calendar days minimum, but no longer than 30 calendar days to cure and dry before applying any road surface finishes.
7. In major or prime arterial streets, an approved set accelerating admixture, such as calcium chloride, may be used only with prior approval of the Agency's Engineer otherwise the contractor shall protect the trench with the approval of the agency's Engineer.
8. See drawing G-33 for narrow trench resurfacing.
9. See table on drawing M-15 for standard minimum conduit depths.

Revision	By	Approved	Date
ORIGINAL		Hashemian	9/02
Add Metric		T. Stanton	03/03

SAN DIEGO REGIONAL STANDARD DRAWING

NARROW TRENCHES
TRENCHING & BACKFILLING

RECOMMENDED BY THE SAN DIEGO REGIONAL STANDARDS COMMITTEE

T. Stanton 3/01/2003

Chairperson R.C.E. 19246 Date

DRAWING NUMBER M-7

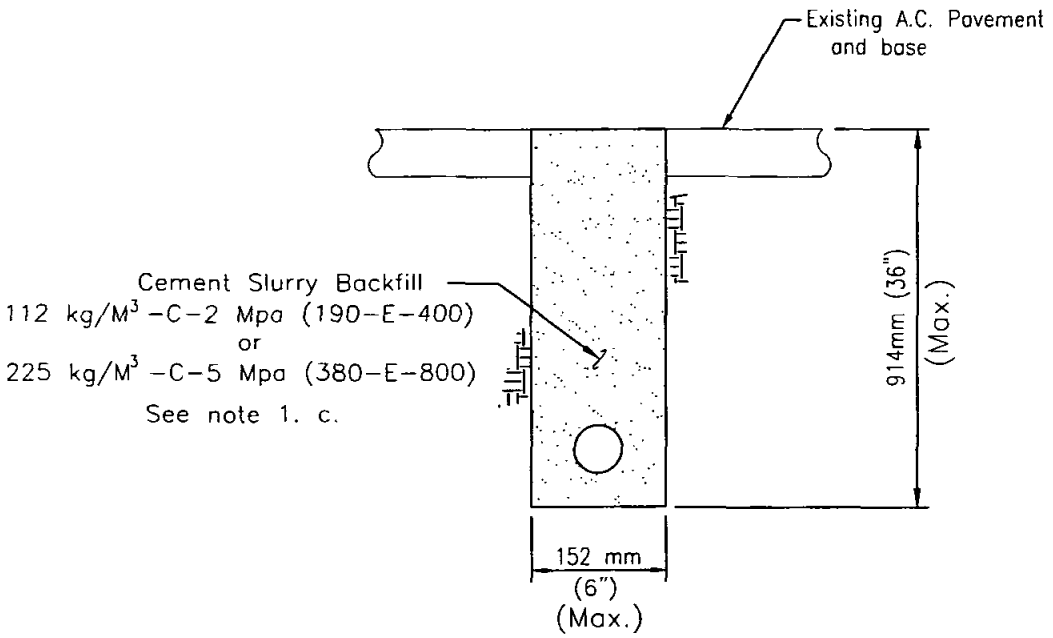

NOTES

1. Cement Slurry Backfill:
   a. Cement slurry backfill shall have a maximum slump of 102 mm (4").
   b. Cement slurry backfill shall be thoroughly consolidated to encase conduits. Tampers or vibrators shall be used.
   c. Cement slurry backfill shall be as follows:
      Alleys and local residential streets ..... Class 112 kg/M^3-C-2 Mpa (190-E-400)
      All other streets ..... Class 225 kg/M^3-C-5 Mpa (380-E-800)
2. Existing A.C. pavement will not require sawcutting when using rockwheel for excavation.
3. All cuts shall be parallel or perpendicular to street centerline, when practical.
4. See drawing G-33 for narrow trench resurfacing.
5. See table on drawing M-15 for standard minimum conduit depths.

Revision	By	Approved	Date
ORIGINAL		Hashemian	9/02
Add Metric		T. Stanton	03/03

SAN DIEGO REGIONAL STANDARD DRAWING

NARROW TRENCHES
TRENCHING & BACKFILLING

RECOMMENDED BY THE SAN DIEGO REGIONAL STANDARDS COMMITTEE

T. Stanton 3/10/2003

Chairperson R.C.E. 19246 Date

DRAWING NUMBER M-7A

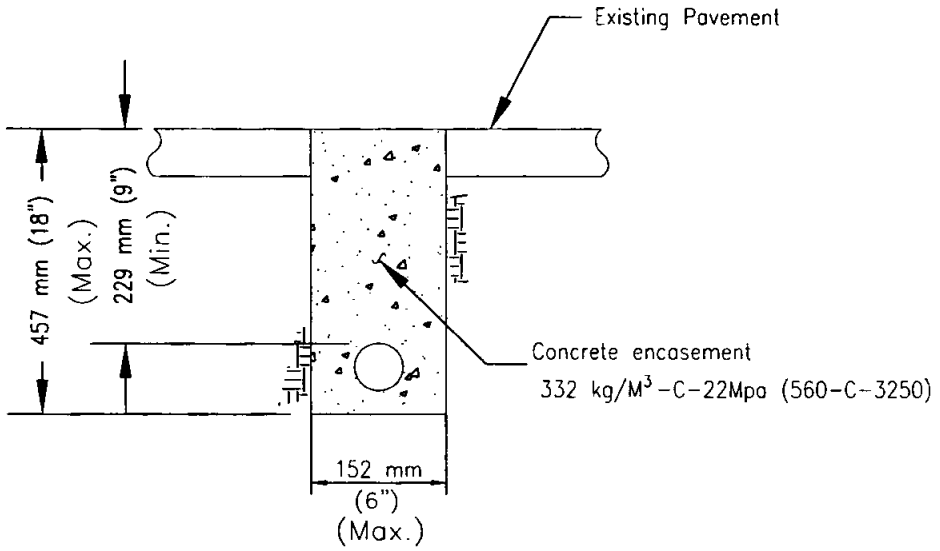

NOTES

1. Concrete encasement or backfill shall have a minimum slump of 102 mm (4").
2. Concrete encasement and/or sand cement slurry backfill shall be thoroughly consolidated to encase conduits. Tampers or vibrators shall be used.
3. Concrete shall be screeded off to match pavement grade and floated to assure proper edge match.
4. Existing pavement will not require saw cutting when using rockwheel for excavation except when the existing pavement is concrete and trench finish is concrete.
5. All cuts shall be parallel or perpendicular to street centerline, when practical.
6. Allow concrete backfill or concrete trench cover 7 calendar days minimum, but no longer than 30 calendar days to cure and dry before applying any road surface finishes.
7. In major or prime arterial streets, an approved set accelerating admixture, such as calcium chloride, may be used only with prior approval of the Agency's Engineer otherwise the contractor shall protect the trench with the approval of the Agency's Engineer.
8. This type of trech shall be permitted for supply cables of 750 volts or less. See California Public Utility Commission General Order No. 128, Rule 33.4 D.(1)(b) and where the conduit can not be placed at the proper recommeded depth.
9. See drawing G-33 for narrow trench resurfacing.
10. This detail shall be used only when there is underground conflicts. See table on drawing M-15 for standard minimum conduit depths.

Revision	By	Approved	Date
ORIGINAL		Hashemian	9/02
Add Metric		T. Stanton	03/03

SAN DIEGO REGIONAL STANDARD DRAWING

NARROW TRENCHES
TRENCHING & BACKFILLING
SHALLOW CONDUIT DEPTH

RECOMMENDED BY THE SAN DIEGO REGIONAL STANDARDS COMMITTEE

T. Stanton 3/01/2003

Chairperson R.C.E. 19246 Date

DRAWING NUMBER M-8

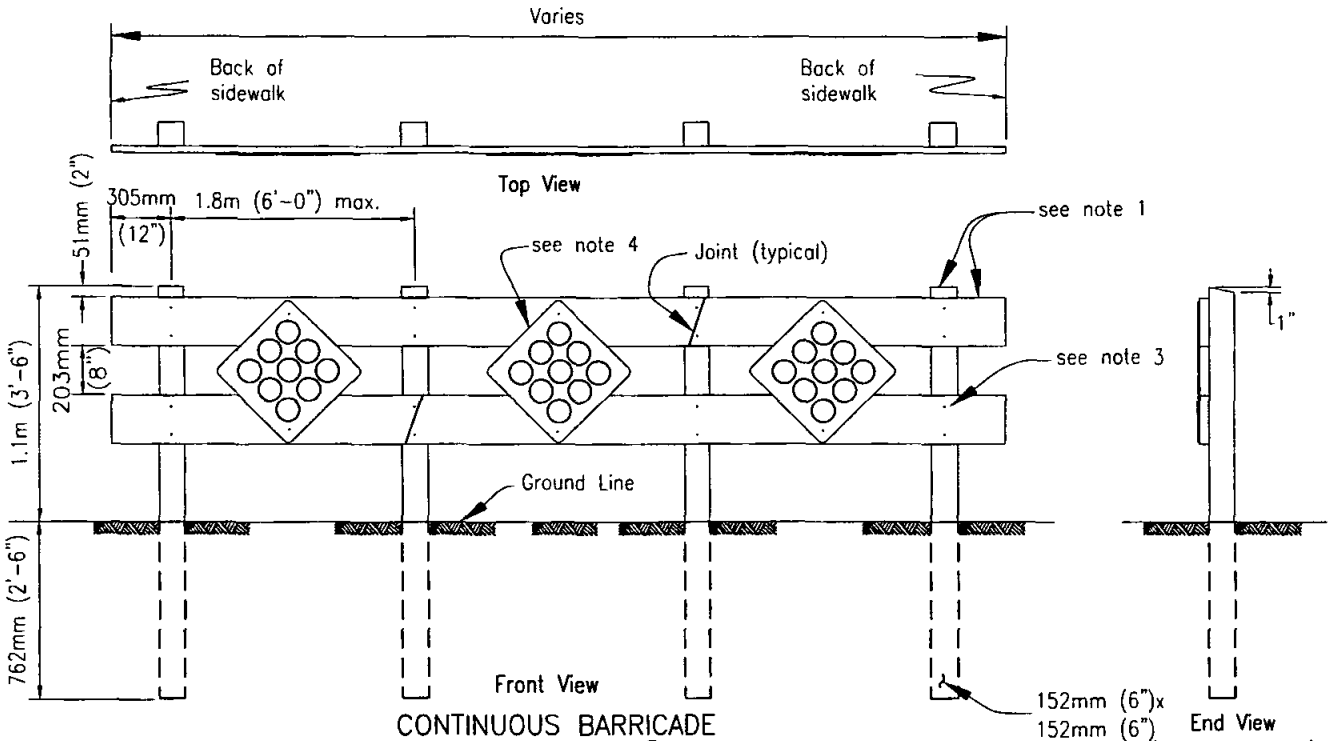

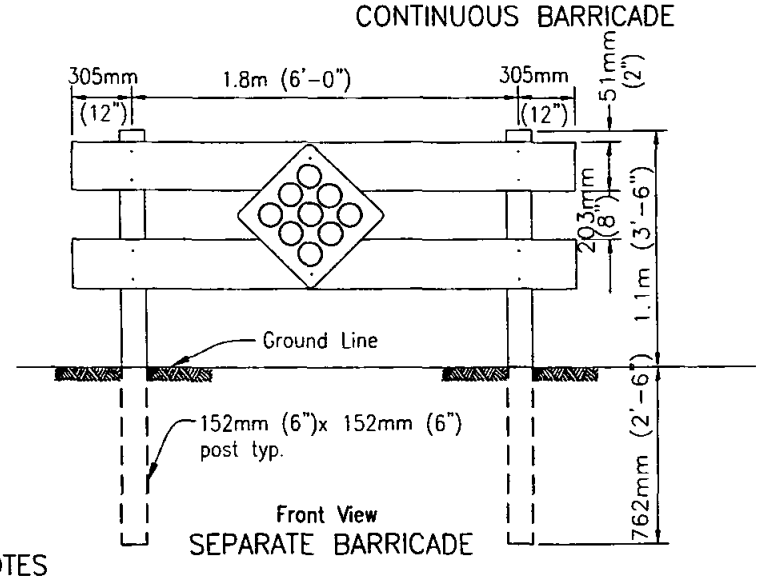

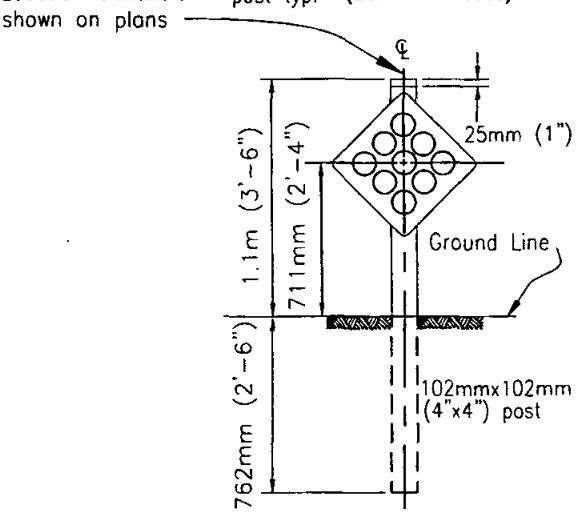

NOTES

1. Posts to be structural grade redwood or pressure treated (with wood preservative) Douglas Fir, surfaced four sides; cross pieces to be 51mm (2")x 203mm (8") select grade Douglas Fir, surfaced four sides.
2. All exposed portions of barricades shall be painted with two coats of white exterior enamel over prime coat.
3. Connections shall be made with 10mm (3/8") x 152mm (6") galvanized lag screws with one (1) washer each. Reflector sign fastners to be 10mm (3/8") x 38mm (1 1/2") galvanized lag screws.
4. Reflector signs - California Type N, Size 457mm (18")x457mm (18") - Yellow with nine (9) -83mm (3 1/4") reflectors (center mount).
   a. Reflectors shall be red for use on dead end streets, in all other cases they shall be yellow. Reflector material shall be plastic or other approved reflectorized material.
   b. Sign material shall be aluminum alloy 6061-T6 or 5052-H38, aluminum thickness 1.6mm (0.063").
5. 1.8m (6') long hat section metal post per Caltrans Std. Plan A74-A optional for guard post.

LEGEND ON PLANS

Barricade

Guard Post

Revision	By	Approved	Date
ORIGINAL		Kercheval	12/75
Add Metric		T. Stanton	03/03

SAN DIEGO REGIONAL STANDARD DRAWING

GUARD POST AND BARRICADE

RECOMMENDED BY THE SAN DIEGO REGIONAL STANDARDS COMMITTEE

T. Stanton 3/10/2003

Chairperson R.C.E. 19246 Date

DRAWING NUMBER M-9

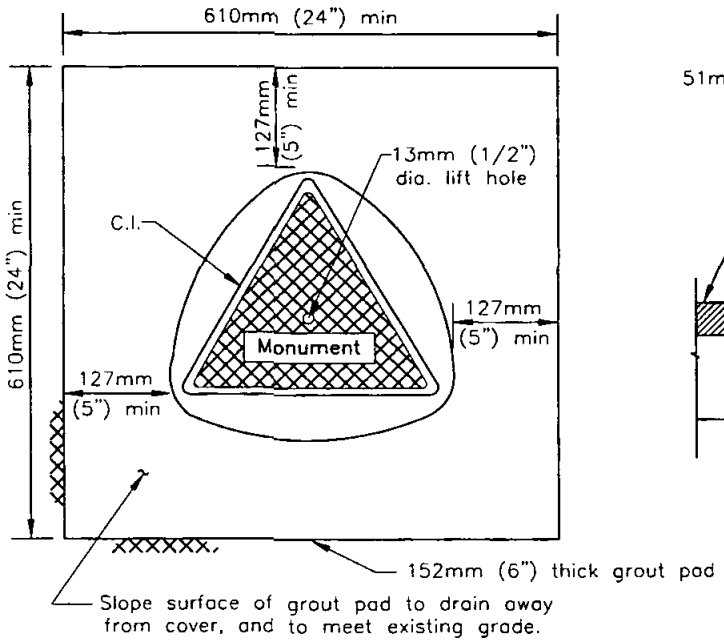

PLAN–IN UNPAVED AREA

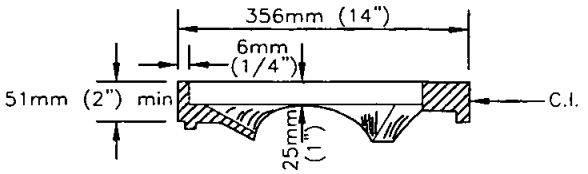

RISER RING

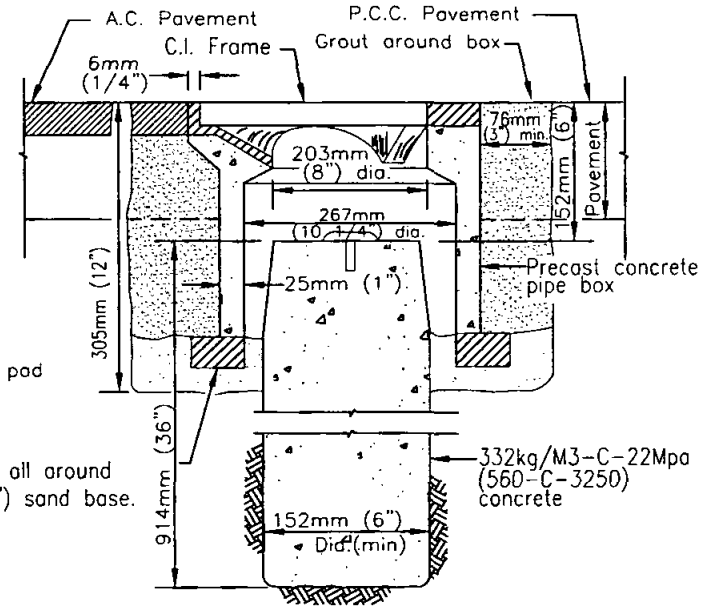

Brick support all around on 51mm (2") sand base.

TYPICAL MONUMENT SECTION IN PAVED AREA

NOTES

1. Cover and frame to be cast integrally with pipe box.
2. Monument base may be cast in place or precast.
3. Form and taper exposed upper 152mm (6") of cast–in–place base to a top diameter of 127mm (5"). (Precast base shall be sand backfilled).
4. Monument marker shall be a domed brass, 76mm (3") in diameter.
5. Monument Location:

a) Set on all centerline intersections unless actual location is modified by the Agency and shown in modified location on map. When centerline intersection is impractical, offset 1.5m (5') on centerline of major street, (see detail at right). If neither centerline can be occupied, two monuments will be set in line around the front on the perimeter of a 3m (10') diameter circle, whose center is the point.

b) Set on centerline at intervals not exceeding 305m (1000') on straight runs.

c) Set on centerline at points of curvature.

d) Set on center at center points of cul–de–sacs.

e) Set on centerline when center point of cul–de–sac is offset from centerline.

f) These standards may be modified at the discretion of the Agency in cases where strict compliance therewith results in more monuments than it considers necessary. The following technique for reducing the number of monuments will be routine.

g) Substitution of one monument on the "Point of Intersection" for monuments at the "Beginning of Curve" and the "Ending of Curve" when the "Point of Intersection" falls within the pavement area.

h) Deletion of any monument otherwise required by these standards when its position can be determined by turning one angle from a point on a straight line between two other monuments, providing such point is not more than 91.4m (300') from the point on which the deleted monument would have been placed.

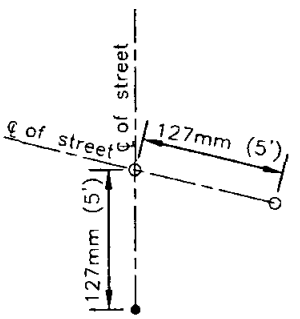

Alteration location of monument. Tie distances shown on final subdivision map if alternate location is used.

LOCATION OF STREET SURVEY MONUMENT

Revision	By	Approved	Date
ORIGINAL		Kercheval	12/75
Add Metric		T. Stanton	03/03

SAN DIEGO REGIONAL STANDARD DRAWING

STREET SURVEY MONUMENT

RECOMMENDED BY THE SAN DIEGO REGIONAL STANDARDS COMMITTEE

T. Stanton 3/10/2003

Chairperson R.C.E. 19246 Date

DRAWING NUMBER M–10

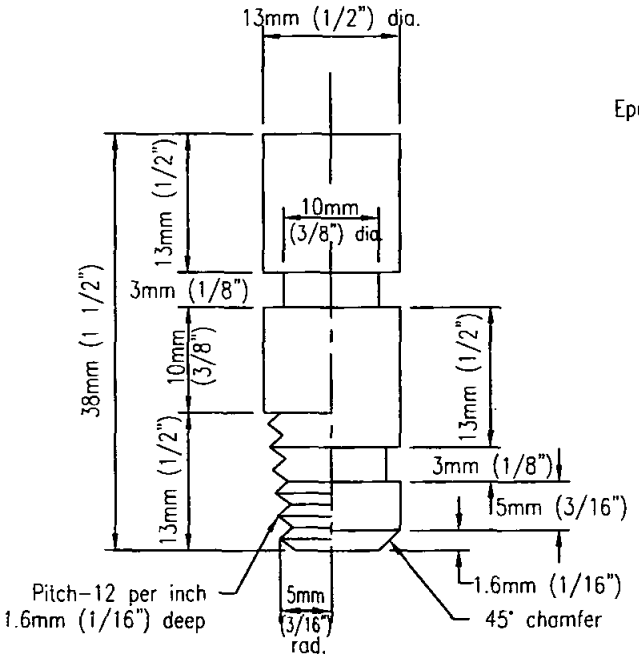

TYPE-A TYPE-B

ELEVATION

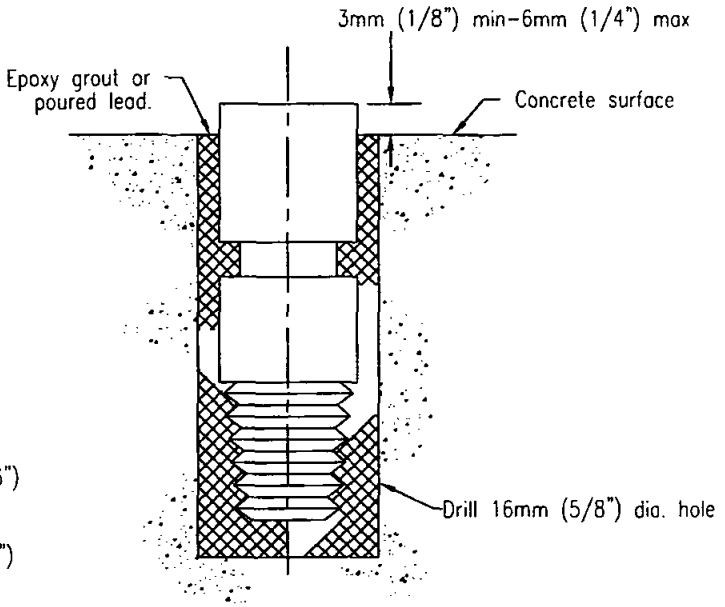

INSTALLATION IN EXISTING CONCRETE
(Typical for Type A or B)

NOTES

1. Material- Brass A.S.T.M. B-16. All machine tolerances ±.4mm (1/64") machine finish.
2. May be installed in fresh concrete at time of installation of concrete structure.
3. Location-in most stable, permanent location in vicinity, such as in base for street light standard or traffic signal (behind sidewalk), in curb (not near joint, on curve or near trees), on top of drainage headwall, in foundation for building or retaining wall or in concrete pads for transformers, pump stations etc.

Revision	By	Approved	Date
ORIGINAL		Kercheval	12/75
Add Metric		T. Stanton	03/03

SAN DIEGO REGIONAL STANDARD DRAWING

BENCH MARK - BRASS PLUG

RECOMMENDED BY THE SAN DIEGO REGIONAL STANDARDS COMMITTEE

T. Stanton 3/10/2003

Chairperson R.C.E. 19246 Date

DRAWING NUMBER M-11

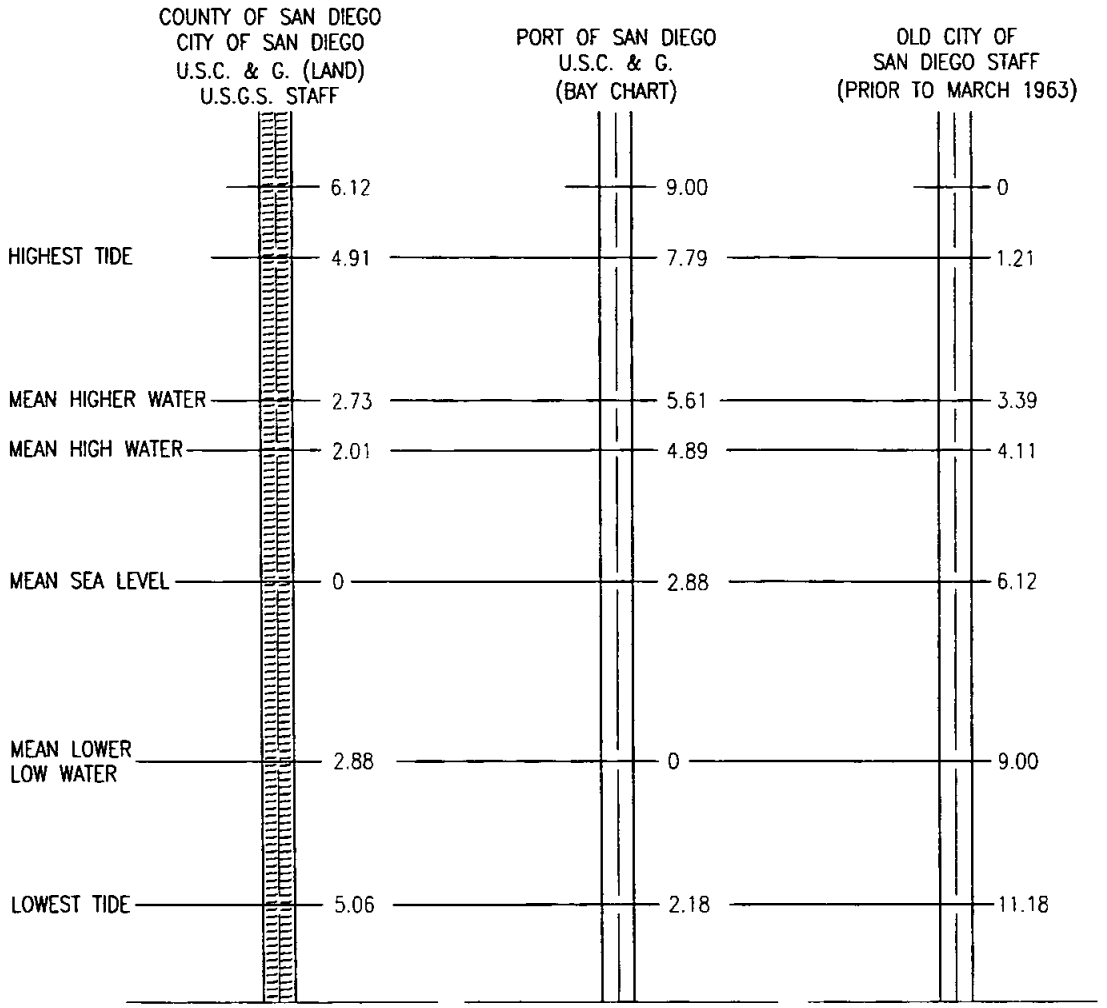

LEGEND

U.S.C. & G. = United States Coast and Geodetic Survey.

U.S.G.S. = United States Geological Survey.

MEAN HIGH WATER = Mean of all high water in San Diego Bay.

MEAN HIGHER WATER = Mean of all higher water in San Diego Bay. Bay charts and topography up to the mean high tide based on zero at the mean lower low water.

SOURCE

Data based on U.S.C. & G. "Sea level Datum of 1923".

Revision	By	Approved	Date
ORIGINAL		Kercheval	12/75
Add Metric		T. Stanton	03/03

SAN DIEGO REGIONAL STANDARD DRAWING

DATUMS

RECOMMENDED BY THE SAN DIEGO REGIONAL STANDARDS COMMITTEE

T. Stanton 3/01/2003

Chairperson R.C.E. 19246 Date

DRAWING NUMBER M-12

FOUND MONUMENTS

Found monuments must denote the character of the monument, how it is identified and the record, or no record as applicable.

SET MONUMENTS – Criteria for Locating and Character

On subdivision boundaries, permanent monuments are required; and must be shown on the map at intervals as specified by the local agency. The location of such points that are inacceptable or will be destroyed by construction may be established by ties to permanent reference monuments shown on the final map.

A permanent monument shall be no less substantial than the following:

a. An iron pipe of minimum two inch diameter not less than 610mm (2') in length placed upright in the ground so that the top of said pipe is flush with the surface. Said pipe shall be filled with a metal or cement plug at least three inches in depth and centered with a metal tack and disc; or

b. A metal plug with tack and disc set flush with the surface in portland cement concrete sidewalk, curb or pavement; or other monument satisfactory to the City Engineer or County Surveyor. The metal plug shall be anchored 25mm (1") deep in sidewalk.

Lot corners and points of curves along street and alley right of way lines where portland cement concrete sidewalks, curbs or pavement exist, or will be constructed as part of the subdivision requirements, shall be identified with tack and disc set flush with the surface along an extension of the lot line at an approved offset, to be measured radially or at right angles to the right of way line in said sidewalk, curb pavement. In case the sideline of the lot is not radial or at right angles to the right of way line a disc shall be set along an extension of the sideline at an offset to be measured radially or at right angles to the right of way line. Where no such concrete work exists, and none will be required to be constructed, all lot corners, angle points and points of curve shall be marked with a monument no less substantial than a one-half inch steel rod or pipe, 457mm (18") long, set flush with the surface.

LEGEND

- ● Fd 51mm (2") Iron Pipe Marked RCE XXXX or per Map XXX unless otherwise noted
- ▲ Fd Street Survey Monument Stamped RCE XXXX or LS XXXX
- ◎ Set 51mm (2") x 610mm (24") Iron Pipe Marked RCE XXXX or LS XXXX
- □ Set Lead and Disc Stamped RCE XXXX or LS XXXX
- ○ Set 13mm (½") x 457mm (18") Iron Pipe Marked RCE XXXX or LS XXXX
- △ Set Street Survey Monument Stamped RCE XXXX or LS XXXX per Standard Drawing M-10

The addition of other symbols is permissible where such will result in a clearer map.

The following notes should be used in the legend where applicable.

Unless otherwise shown on this map:

1. All lot corners except as described below will be monumented by a 13mm (½") by 457mm (18") iron pin stamped (RCE or LS number).

2. Lot corners along the sideline of dedicated street right of way will be monumented by a disc stamped (RCE or LS number), set along an extension of the lot line at an offset of __ in the (curb, sidewalk). The offset shall be measured radially, or at right angles, to the right of way line. (See example below.)

3. All points of curve of the sidelines of dedicated streets will be monumented by a disc stamped (RCE or LS number), set at an offset of __ in the (curb, sidewalk). The offset shall be measured radially.

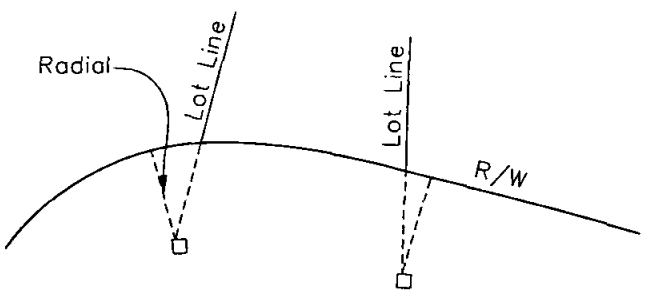

EXAMPLE OF OFFSET DISCS

Revision	By	Approved	Date
ORIGINAL		Kercheval	12/75
Add Metric		T. Stanton	03/03

SAN DIEGO REGIONAL STANDARD DRAWING

SURVEY MONUMENTS

RECOMMENDED BY THE SAN DIEGO REGIONAL STANDARDS COMMITTEE

T. Stanton 3/01/2003

Chairperson R.C.E. 19246 Date

DRAWING NUMBER M-13

WEIGHT

1 Gram	=	15.4324	grains	1 Grain	=	0.0648	g.
1 Gram	=	0.0353	oz.	1 Once	=	28.3495	g.
1 Kg.	=	2.2046	lb.	1 Pound	=	0.4536	kg.
1 Kg.	=	0.0011	ton	1 Ton	=	907.1848	kg.
1 Ton (met)	=	1.1023	ton	1 Ton	=	0.9072	ton (met)

AREA

1 Sq. cm.	=	0.1550	sq. in.	1 Sq. in.	=	6.4516	sq. cm.
1 Sq. m.	=	10.7639	sq. ft.	1 Sq. ft.	=	0.0929	sq. m.
1 Sq. m.	=	1.1960	sq. yd.	1 Sq. yd.	=	0.8361	sq. m.
1 Hectare	=	2.4710	acres	1 Acre	=	0.4047	hectare
1 Sq. km.	=	0.3861	sq. mile	1 Sq. mile	=	2.5900	sq. km.
1 Sq. km.	=	247.10	acres	1 Acre	=	0.0040	sq. km.

VOLUME

1 Cu. cm.	=	0.0610	cu. in.	1 Cu. in.	=	16.3872	cu. cm.
1 Cu. m.	=	35.3134	cu. ft.	1 Cu. ft.	=	0.0283	cu. m.
1 Cu. m.	=	1.3079	cu. yd.	1 Cu. yd.	=	0.7646	cu. m.

CAPACITY

1 Liter	=	61.0250	cu. in.	1 Cu. in.	=	0.0164	liter
1 Liter	=	0.0353	cu. ft.	1 Cu. ft.	=	28.3162	liters
1 Liter	=	0.2642	gal. (U.S)	1 Gal.	=	3.7853	liters
1 Liter	=	0.0284	gal. (U.S.)	1 Bu.	=	35.2383	liters

LENGTH

1 MM.	=	0.0394	in.	1 In.	=	25.4000	mm.
1 CM.	=	0.3937	in.	1 In.	=	2.5400	cm.
1 Meter	=	3.2808	ft.	1 Ft.	=	0.3048	m.
1 Meter	=	1.0936	yd.	1 Yd.	=	0.9144	m.
1 Km.	=	0.6214	mile	1 Mile	=	1.6093	km.

METRIC PREFIX

MULTIPLE	PREFIX	MULTIPLE	PREFIX
1000000	mega	1/10	deci
1000	kilo	1/100	centi
100	hecto	1/1000	milli
10	deka	1/1000000	micro

TEMPERATURE

Degrees Fahrenheit = 9/5 (Degrees Celsius) + 32

Degrees Centigrade = 5/9 (Degrees Fahrenheit − 32)

Revision	By	Approved	Date
ORIGINAL		Kercheval	12/75
Add Metric		T. Stanton	03/03

SAN DIEGO REGIONAL STANDARD DRAWING

METRIC EQUIVALENTS

RECOMMENDED BY THE SAN DIEGO REGIONAL STANDARDS COMMITTEE

T. Stanton 3/10/2003

Chairperson R.C.E. 19246 Date

DRAWING NUMBER M-14

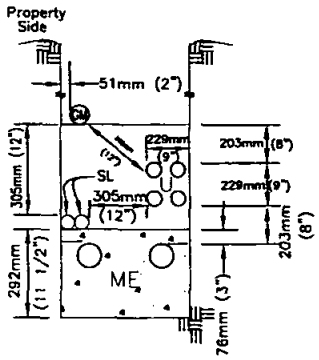

TYPE A

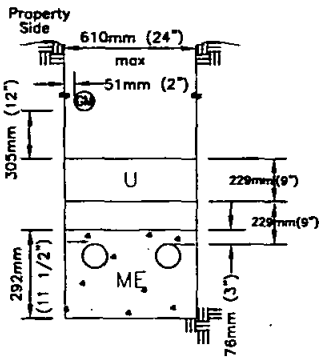

TYPE B

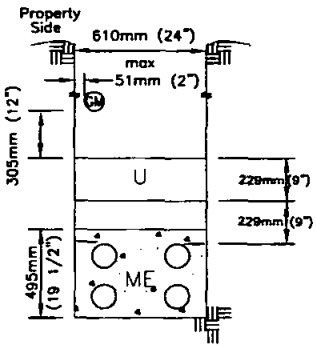

TYPE C

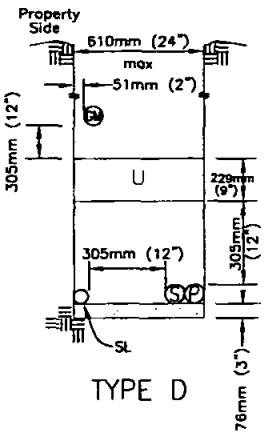

TYPE D

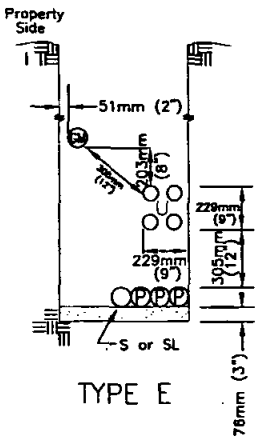

TYPE E

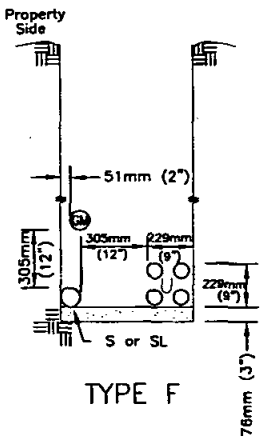

TYPE F

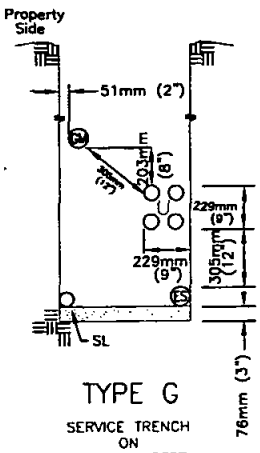

TYPE G

SERVICE TRENCH ON PUBLIC PROPERTY

	Legend	Minimum Cover
GM	Gas Main	762mm (30")
GS	Gas Service	762mm (30")
P	Primary Electric	1.1m (42")
S	Secondary Electric	762mm (30")
ES	Electric Service	762mm (30")
ME	Multiple Electric (P, S or ES in Spacers) Concrete Encased	610mm (24")
SL	Street Light (not series)	762mm (30")
U	CATV	610mm (24")
	TELCO	610mm (24")

NOTES

1. All dimensions are typical unless otherwise noted.
2. Generally utilities are to be installed under the applicable specifications for the particular utility and the specifications of the owner Agency.
3. The location of utilities as shown by the Standard Drawing shall in no way violate existing codes or regulations applicable to individual utilities.
4. Installation of sewer and/or water utilities are not permitted in the joint trenches shown above.
5. Minimum depth of gas pipe may, subject to gas company inspectors approval, be reduced to 610mm (24") where necessary to clear structure crossings.
6. Depth and width of trench varies.
7. CATV main or trunk line conduit required along all streets, except cul-de-sac streets less than 305m (1,000') in length which may be served by feeder lines only.
8. CATV 38mm (1-1/2") feeder conduit shall run across streets with each power service line and capped at edge of sidewalk.
9. All CATV terminals and conduits shall be terminated at generally accepted locations and marked. A map shall be filed with the appropriate agency showing the locations of the CATV system.
10. In no case shall CATV conduits be placed within 305mm (12") of gas lines, also conduits are not to be placed directly over gas lines.
11. Catv conduit may be placed with the TELCO conduit provided the TELCO minimum depth is held.

Revision	By	Approved	Date
ORIGINAL		Parkinson	9/88
Add Metric		T. Stanton	03/03

SAN DIEGO REGIONAL STANDARD DRAWING

JOINT TRENCH LOCATIONS

RECOMMENDED BY THE SAN DIEGO REGIONAL STANDARDS COMMITTEE

T. Stanton 3/01/2003

Chairperson R.C.E. 19246 Date

DRAWING NUMBER M-15

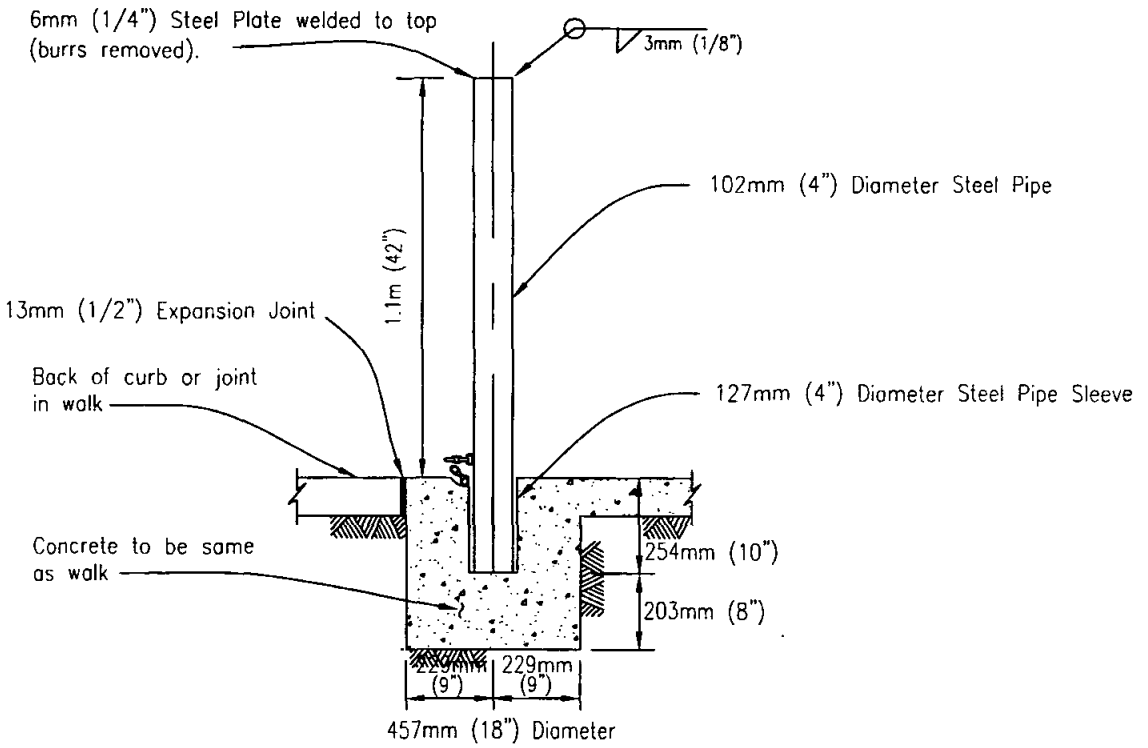

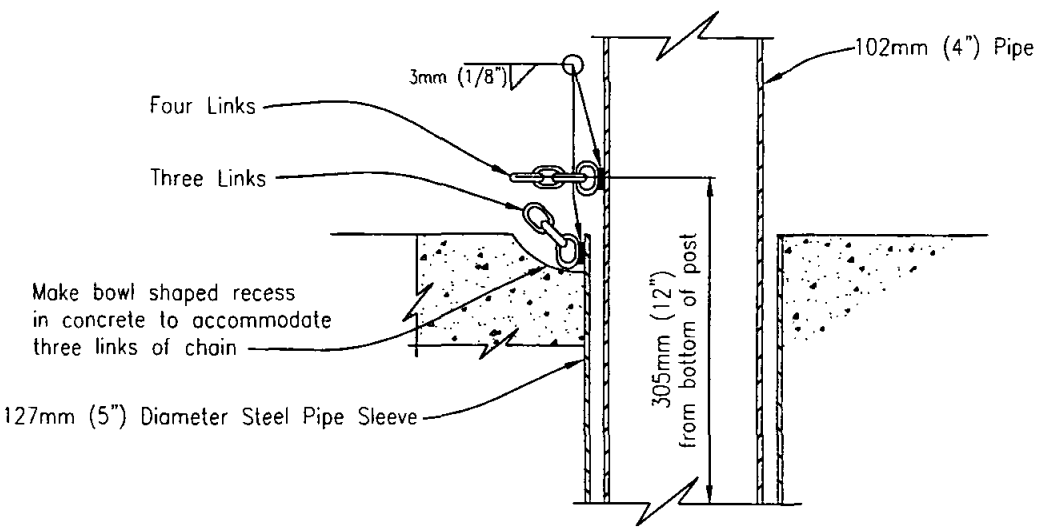

HASP DETAIL

NOTES

1. Chain to be 6mm (1/4") proof coil chain galvanized steel. Weld four links to post and three links to pipe sleeve.

2. All metal to be hot-dip galvanized after fabrication.

LEGEND ON PLANS

○

Revision	By	Approved	Date
ORIGINAL		Solomon	7/79
Add Metric		T. Stanton	03/03

SAN DIEGO REGIONAL STANDARD DRAWING

DEMOUNTABLE POST

RECOMMENDED BY THE SAN DIEGO REGIONAL STANDARDS COMMITTEE

T. Stanton 3/01/2003

Chairperson R.C.E. 19246 Date

DRAWING NUMBER M-16

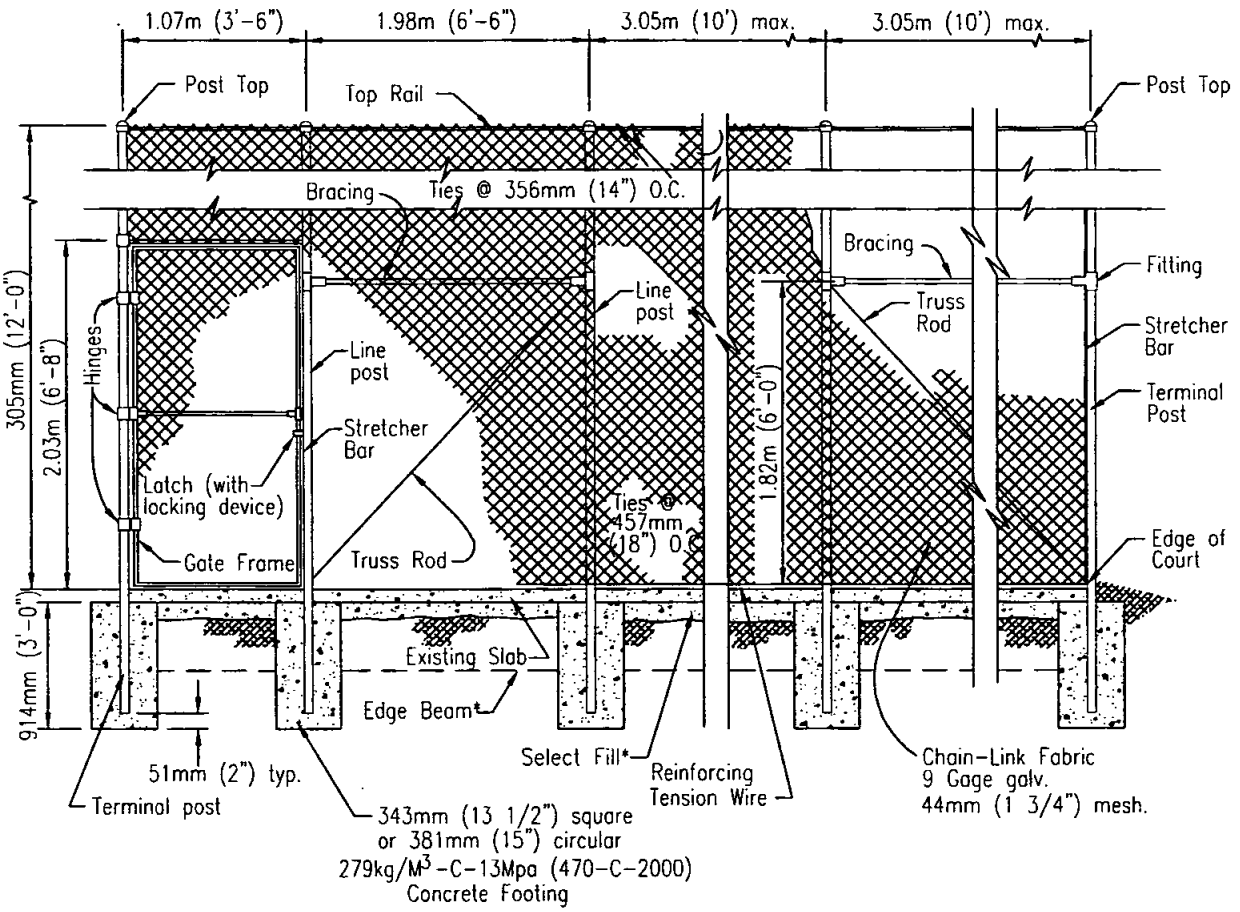

* For Edge Beam, Slab, and Select Fill details, see plans.

ELEVATION

DESCRIPTION	MIN. SIZE IN KILOGRAMS / (INCHES)	MIN. WEIGHT PER LIN FT IN KILOGRAMS / (LBS).
Line Post	60mm (2.375) O.D.	1.65kg (3.65)
Terminal Post	73mm (2.875) O.D.	2.63kg (5.79)
Top Rail	42mm (1.660) O.D.	1.03kg (2.27)
Bracing	42mm (1.660) O.D.	1.03kg (2.27)
Gate Frame	42mm (1.660) O.D.	1.03kg (2.27)

NOTE:

Chain link fabric shall be erected on the interior side of the courts.

CAUTION:

This Standard Drawing is not to be used if any wind screen is to be applied to the fence.

Revision	By	Approved	Date
ORIGINAL		Solomon	7/79
Add Metric		T. Stanton	03/03

SAN DIEGO REGIONAL STANDARD DRAWING

TENNIS COURT FENCE
CHAIN LINK

RECOMMENDED BY THE SAN DIEGO REGIONAL STANDARDS COMMITTEE

T. Stanton 3/10/2003

Chairperson R.C.E. 19246 Date

DRAWING NUMBER M-17

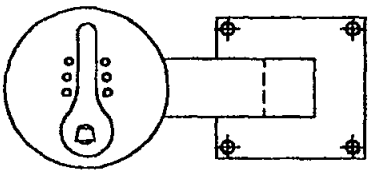

① Drinking Fountain – Haws model 3376 or approved equal.
② 10mm (3/8") dia. Expansion anchors with flat (recessed heads) screws 4 places.
③ 32mm (1 ¼") P.V.C. pipe with sweep 90° ell connection to fountain drain.
④ 241mm (9 ½") x 406mm (16") concrete yard box with hinged locking top (Brooks No. 3HL or equal) set on red brick foundation.
⑤ 102mm (4") x 12.2m (40') perforated plastic underdrain pipe, encased in 19mm (3/4") crushed rock.
⑥ 25mm (1") gate valve with red brass cross handle and union. Install as per Std. Dwg. I–12
⑦ 51mm (2") dia. galv. pipe sleeve with red brass lock cap per Std. Dwg. I–12
⑧ Rigid copper pipe from gate valve to fountain assembly connection.
⑨ Concrete pavement.

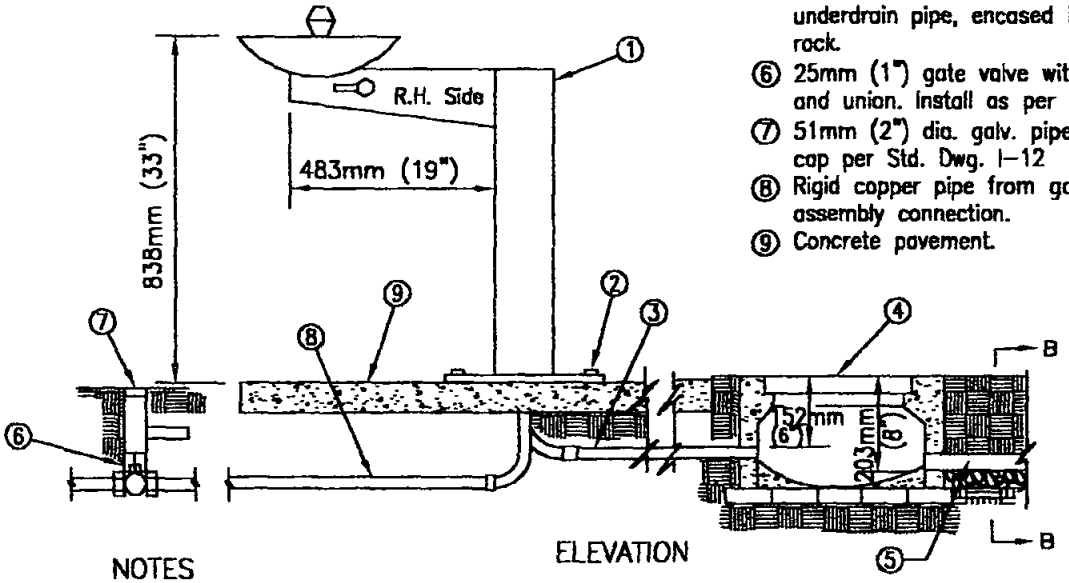

ELEVATION

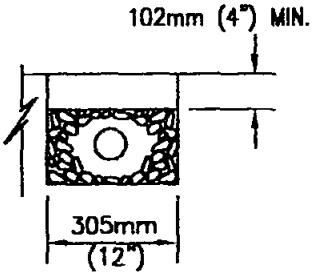

SECTION B–B

NOTES

1. Install fountain so that right hand side faces prevailing wind.
2. Hand form a concrete bowl at bottom of yard box to facilitate sand clean out.
3. Perforated drain pipe and trench are to drain away from fountain at 1% min. slope. Keep drain in lawn areas.
4. Item no. 6 is a 25mm (1") gate valve. Use red brass bushing reducers to adapt to feed pipe.

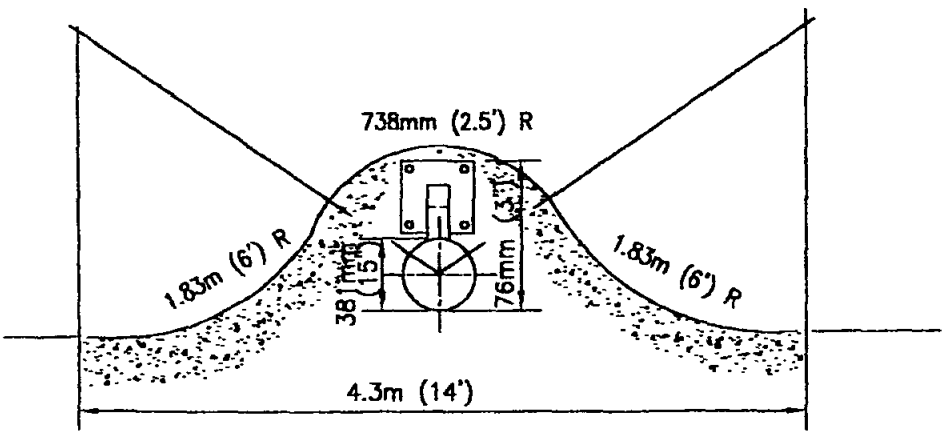

PLAN

LEGEND ON PLANS

Revision	By	Approved	Date
ORIGINAL		H. Hecht	10/82
Add Metric		T. Stanton	03/03

SAN DIEGO REGIONAL STANDARD DRAWING

DRINKING FOUNTAIN

RECOMMENDED BY THE SAN DIEGO REGIONAL STANDARDS COMMITTEE

T. Stanton 3/10/2003

Chairperson R.C.E. 19246 Date

DRAWING NUMBER M–18

STREET LOCATIONS

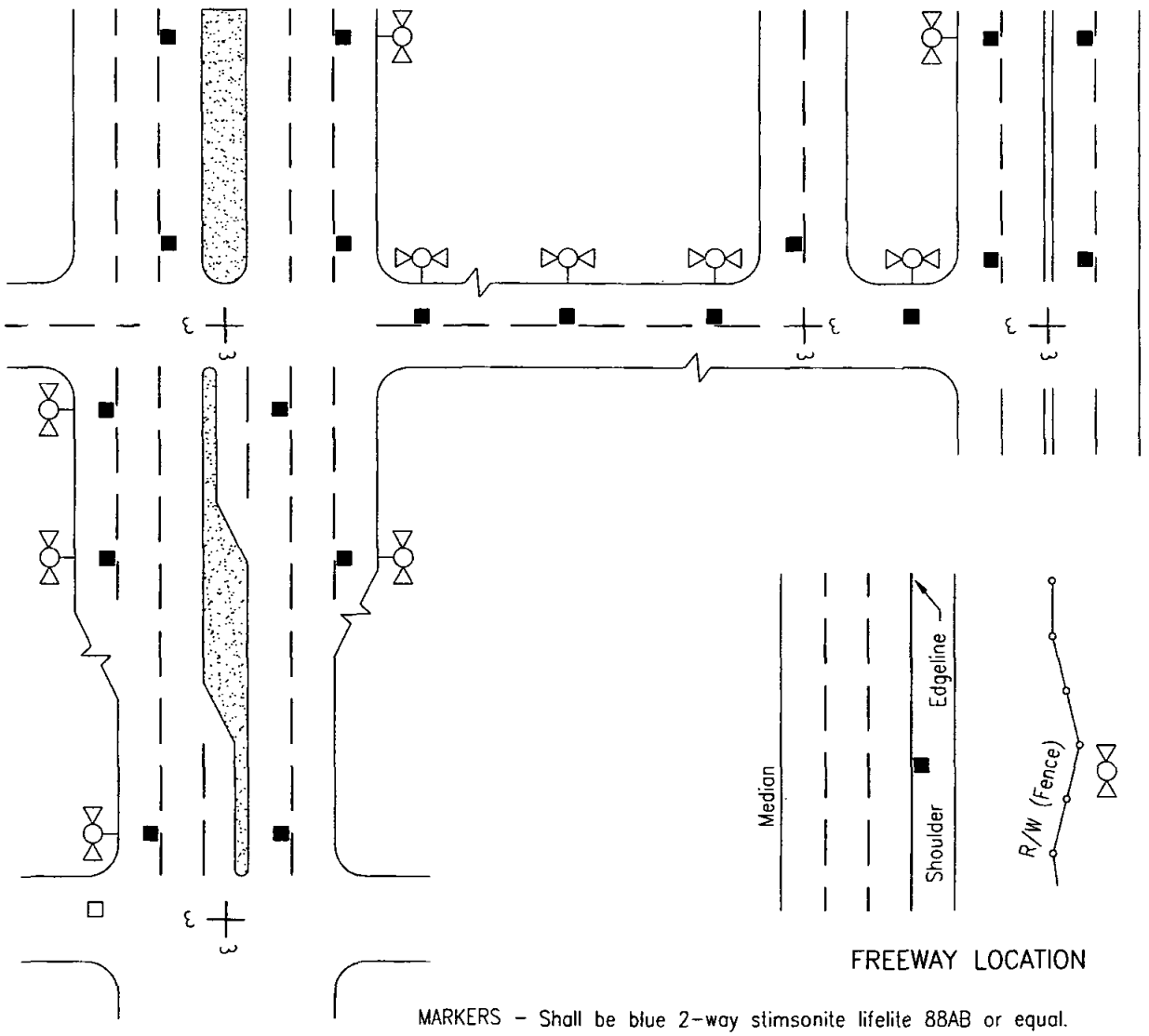

FREEWAY LOCATION

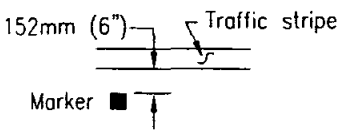

DETAIL

MARKERS – Shall be blue 2-way stimsonite lifelite 88AB or equal.

ADHESIVE – An ample amount of two (A&B) epoxy or equal.

SURFACES – Clean and dry prior to installation per manufacturer's recommendations. Install markers with reflective surfaces facing oncoming vehicles and offset 51mm (2") from lane lines toward fire hydrant.

NOTES

1. Fire Department will provide location(s) for all markers in PRD's, Commercial Lots and other areas outside of Public Right of Way.
2. Markers must be installed at the new and relocated hydrants and within all resurfacing projects.
3. For streets without lane lines or streets with raised pavement markers and no painted lane lines, install markers 152mm (6") from centerline or existing markers.

LEGEND ON PLANS

Marker ■

Fire Hydrant ⊳○⊲

Revision	By	Approved	Date
ORIGINAL		H. Hecht	10/82
Add Metric		T. Stanton	03/03

SAN DIEGO REGIONAL STANDARD DRAWING

FIRE HYDRANT MARKERS

RECOMMENDED BY THE SAN DIEGO REGIONAL STANDARDS COMMITTEE

T. Stanton 3/10/2003

Chairperson R.C.E. 19246 Date

DRAWING NUMBER M-19

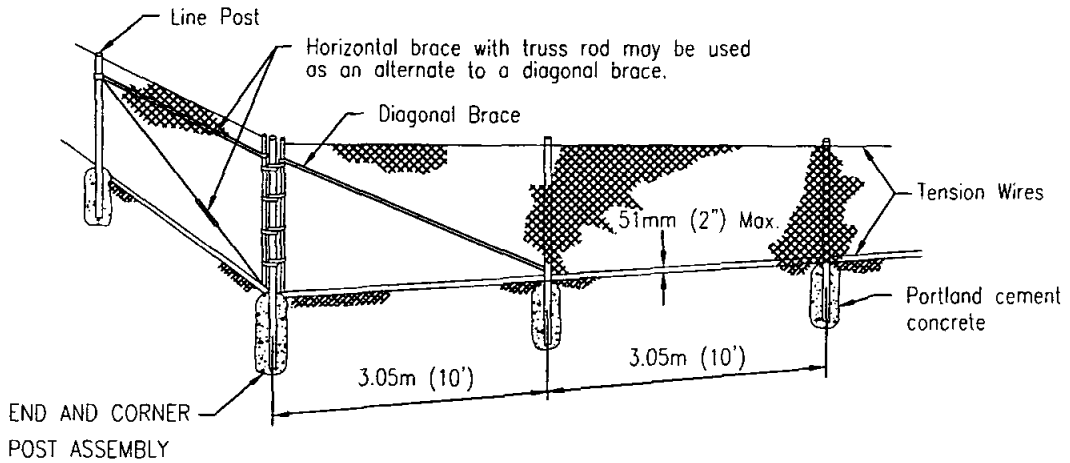

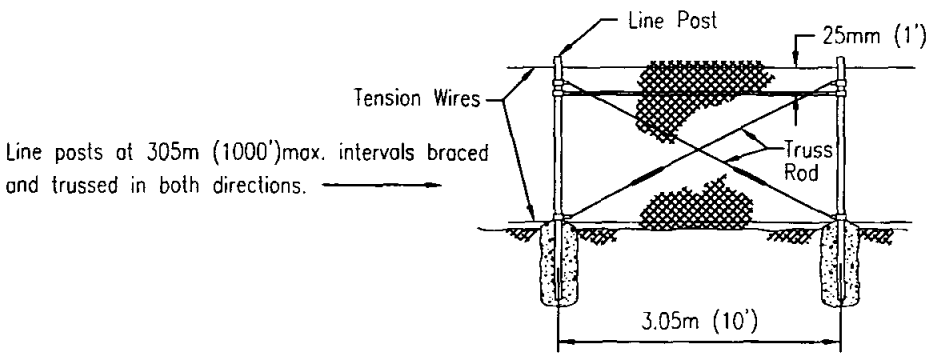

LINE POST BRACING

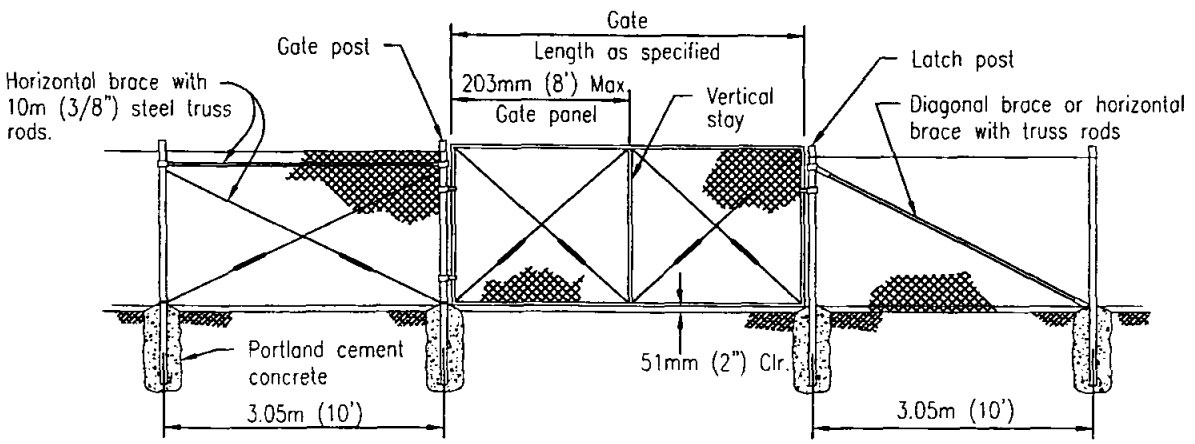

GATE ASSEMBLY

Revision	By	Approved	Date
ORIGINAL		Bahmanian	4/86
Add Metric		T. Stanton	03/03

SAN DIEGO REGIONAL STANDARD DRAWING

CHAIN LINK FENCE DETAILS

RECOMMENDED BY THE SAN DIEGO REGIONAL STANDARDS COMMITTEE

T. Stanton 3/10/2003

Chairperson R.C.E. 19246 Date

DRAWING NUMBER M-20

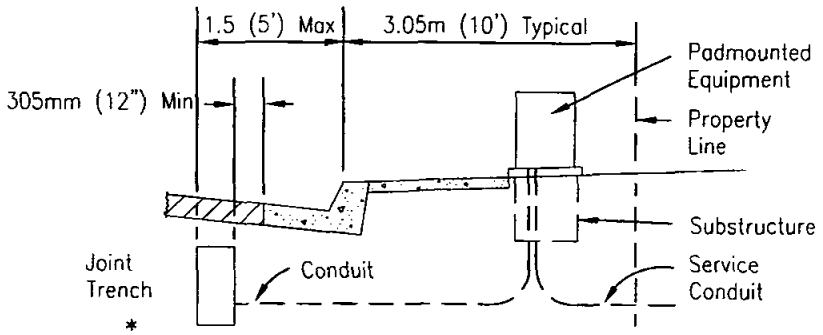

SIDEWALK NEXT TO CURB

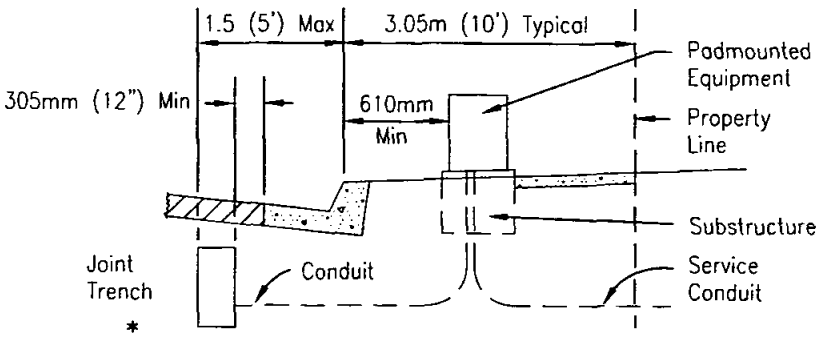

SIDEWALK NEXT TO PROPERTY LINE

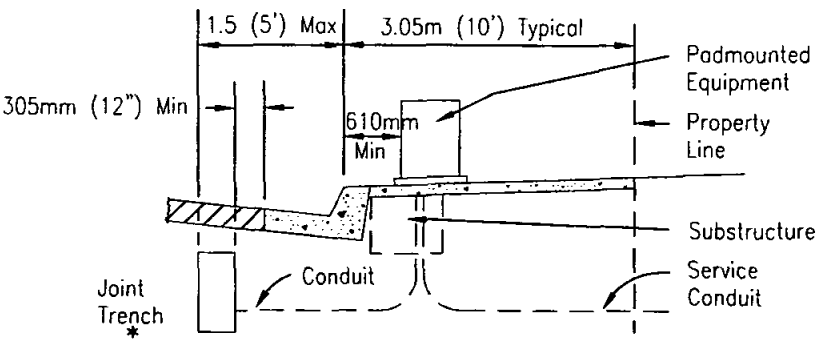

SIDEWALK NEXT TO CURB AND PROPERTY LINE

NOTES

1. Sidewalk shall have a minimum of 1.2m (4') clear area (path, not including curb) passing pedestals, pullboxes and other structures.
2. See Standard Drawing M-15 for joint trench.

Revision	By	Approved	Date
ORIGINAL		Parkinson	9/88
Add Metric		T. Stanton	03/03

SAN DIEGO REGIONAL STANDARD DRAWING

UNDERGROUND TYPICAL LOCATION CONVERSION/REPLACEMENT/UPGRADE

RECOMMENDED BY THE SAN DIEGO REGIONAL STANDARDS COMMITTEE

T. Stanton 3/10/2003

Chairperson R.C.E. 19246 Date

DRAWING NUMBER M-21

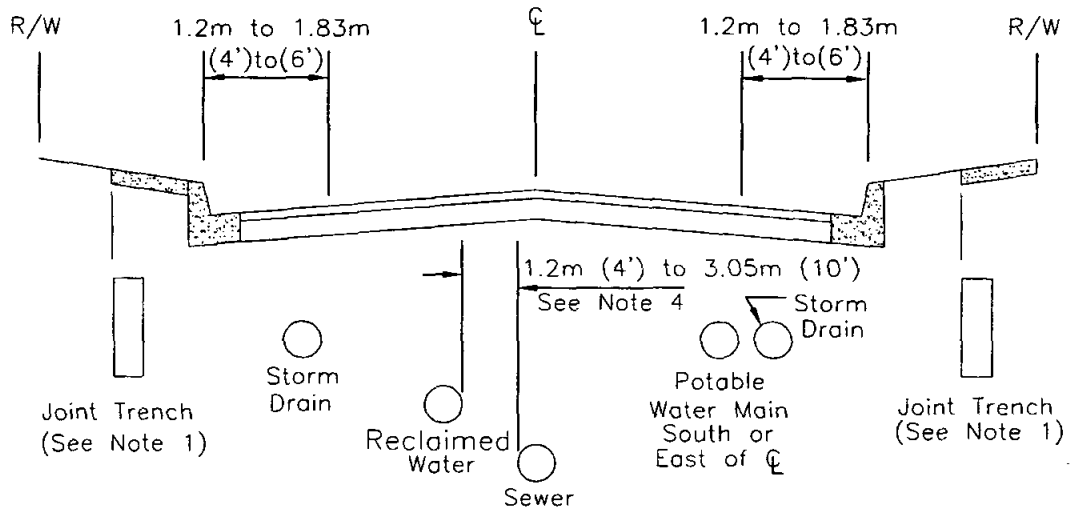

MAJOR STREET

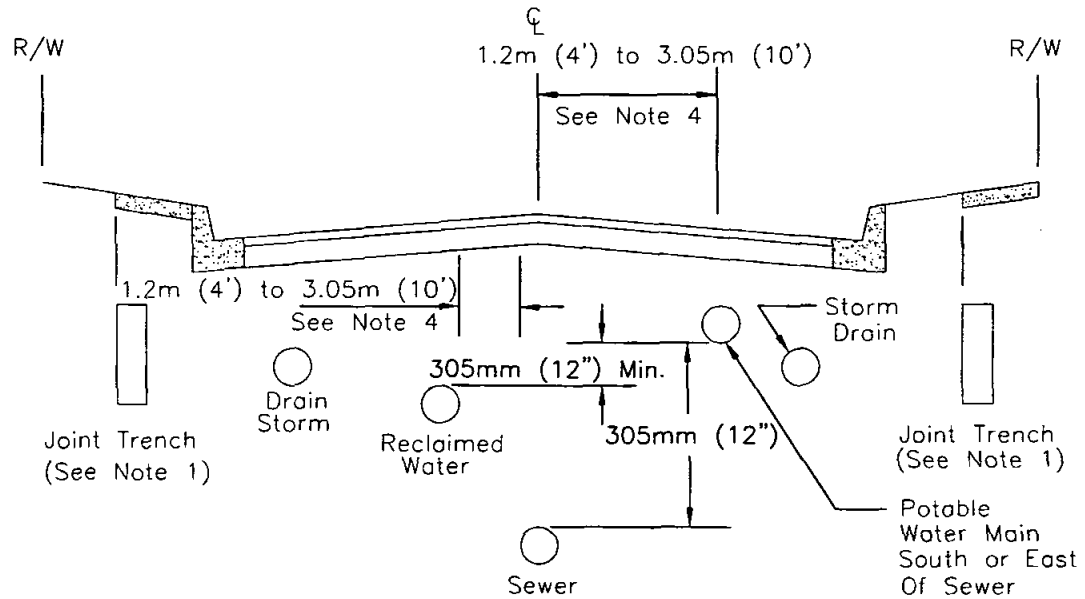

TYPICAL STREET
NEW CONSTRUCTION

NOTES

1. At catch basin locations, joint trench shall be 1.2m (4'). minimum from back of curb to inside wall of trench. See Standard Drawing M-15 for configuration of utilities in joint trench.
2. Sewer and reclaimed water mains shall be designed to cross under potable water mains. The vertical separation between potable water and reclaimed water shall be a minimum of 305mm(12").
3. Sewer and reclaimed water laterals shall cross under potable water main, with a minimum vertical separation of 305mm (12").
4. Sewer and reclaimed water mains shall maintain a 3.05m (10'). minimum horizontal separation, O.D to O.D., with any potable water or sewer/reclaimed main. This separation may be reduced utilizing special construction, with special approval from the Agency and the County Health Dept. For sewer or reclaimed water mains less than 610mm (24") in diameter, only Agency approval is required.

Revision	By	Approved	Date
ORIGINAL		Parkinson	2/95
Add Metric		T. Stanton	03/03

SAN DIEGO REGIONAL STANDARD DRAWING

UTILITY LOCATIONS
LOCAL AND MAJOR STREETS

RECOMMENDED BY THE SAN DIEGO REGIONAL STANDARDS COMMITTEE

T. Stanton 3/01/2003

Chairperson R.C.E. 19246 Date

DRAWING NUMBER M-22

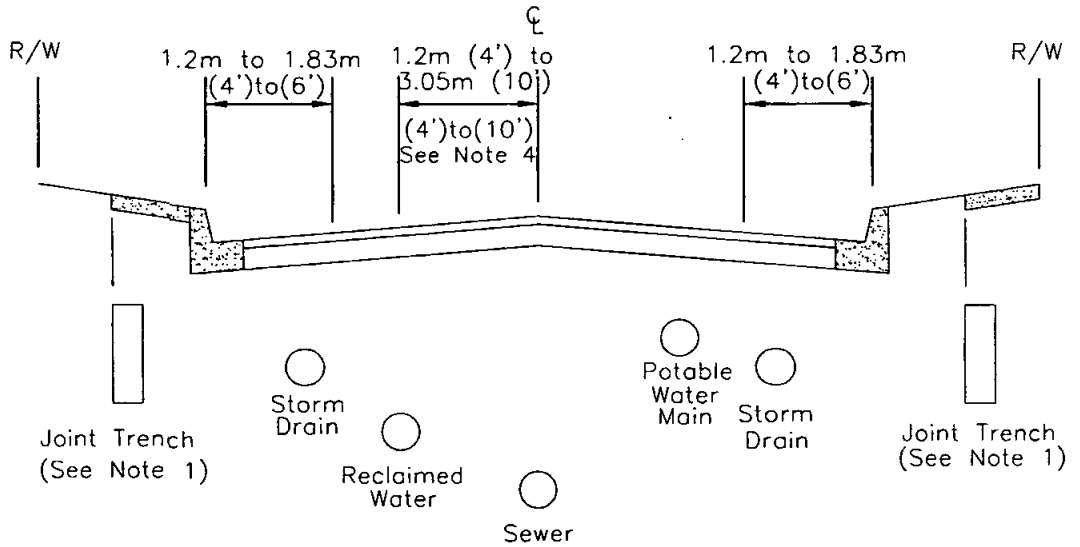

PRIME ARTERIAL

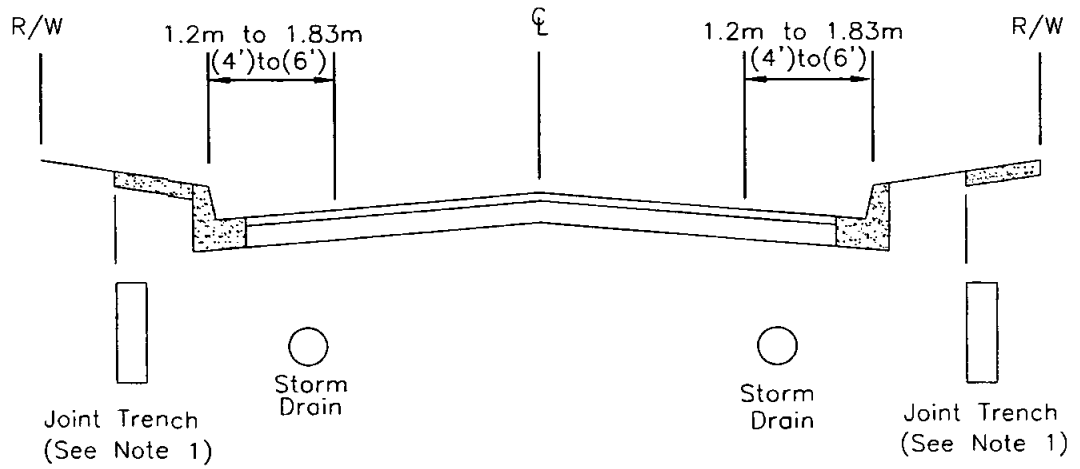

EXPRESSWAY

NOTES

1. At catch basin locations, joint trench shall be 1.2m (4'). minimum from back of curb to inside wall of trench. See Standard Drawing M-15 for configuration of utilities in joint trench.
2. Sewer and reclaimed water mains shall be designed to cross under potable water mains. The vertical separation between potable water and reclaimed water shall be a minimum of 305mm(12").
3. Sewer and reclaimed water laterals shall cross under potable water main, with a minimum vertical separation of 305mm (12").
4. Sewer and reclaimed water mains shall maintain a 3.05m (10'). minimum horizontal separation, O.D to O.D., with any potable water or sewer/reclaimed main. This separation may be reduced utilizing special construction, with special approval from the Agency and the County Health Dept. For sewer or reclaimed water mains less than 610mm (24") in diameter, only Agency approval is required.

Revision	By	Approved	Date
ORIGINAL		G.Parkinson	2/95
Add Metric		T. Stanton	03/03

SAN DIEGO REGIONAL STANDARD DRAWING

UTILITY LOCATIONS
PRIME ARTERIALS AND EXPRESSWAYS

RECOMMENDED BY THE SAN DIEGO REGIONAL STANDARDS COMMITTEE

T. Stanton 3/10/2003

Chairperson R.C.E. 19246 Date

DRAWING NUMBER M-23

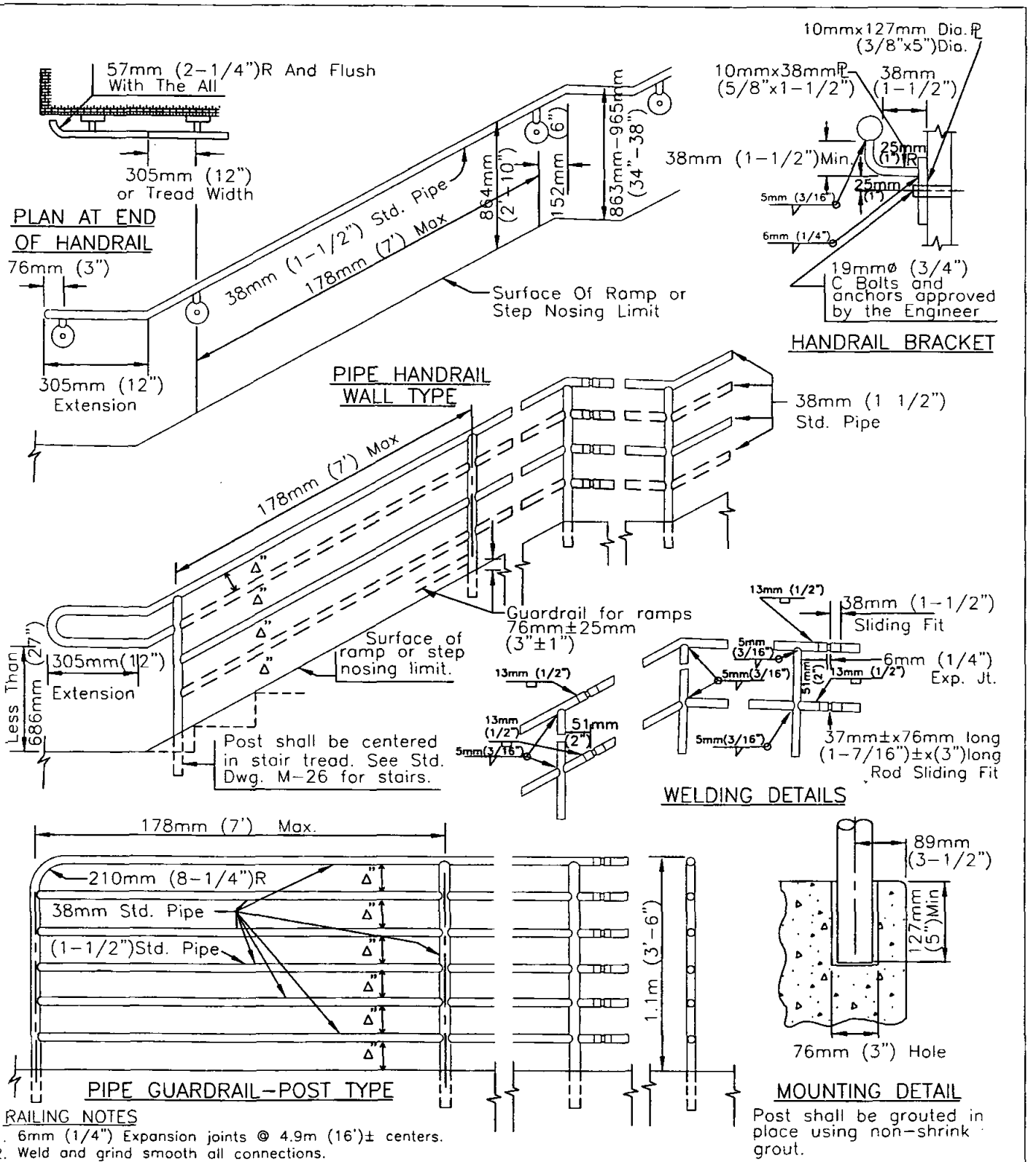

Post shall be grouted in place using non-shrink grout.

RAILING NOTES

1. 6mm (1/4") Expansion joints @ 4.9m (16')± centers.
2. Weld and grind smooth all connections.
3. All railing to be hot dip galvanized after fabrication.
4. Pipe shall seamless steel ASTM A53 Grade B.
5. Maximum =Δ102mm(4"). Guardrails and handrails for stairs and ramps more than 762mm(30") above have intermediate rails equally spaced such that a sphere 102mm(4") in diameter cannot pass through.
6. Handrail extension for stairs, at all bottom risers, shall be 305mm(12") plus one tread width.

Revision	By	Approved	Date
ORIGINAL		G.Parkinson	2/95
Add Metric		T. Stanton	03/03

SAN DIEGO REGIONAL STANDARD DRAWING

PEDESTRIAN PROTECTIVE RAILING DETAILS No. 1

RECOMMENDED BY THE SAN DIEGO REGIONAL STANDARDS COMMITTEE

T. Stanton 3/01/2003

Chairperson R.C.E. 19246 Date

DRAWING NUMBER M-24

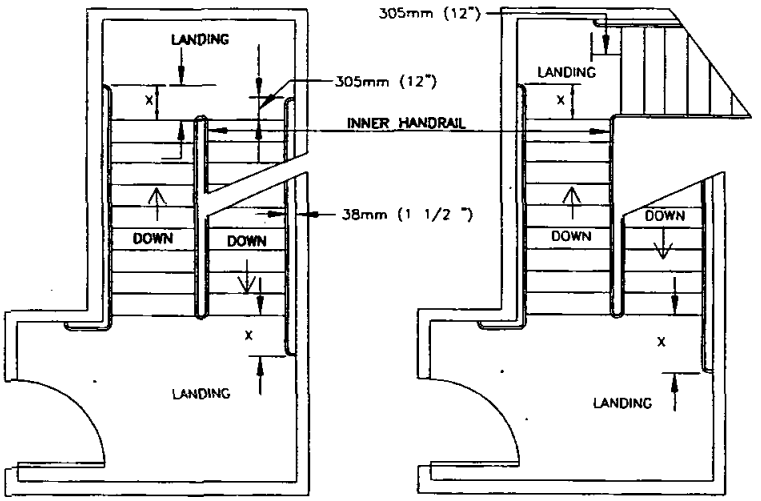

X IS THE MINIMUM HANDRAIL EXTENSION OF 12 INCHES PLUS THE WIDTH OF ONE TREAD AT EACH BOTTOM RISER.

NOTE: INNER HANDRAIL AT LANDINGS OF STAIRS THAT DOUBLE BACK OR IMMEDIATELY TURN SHALL BE CONTINUOUS, AND SHALL NOT EXTEND ONTO LANDING OR PATH OF TRAVEL.

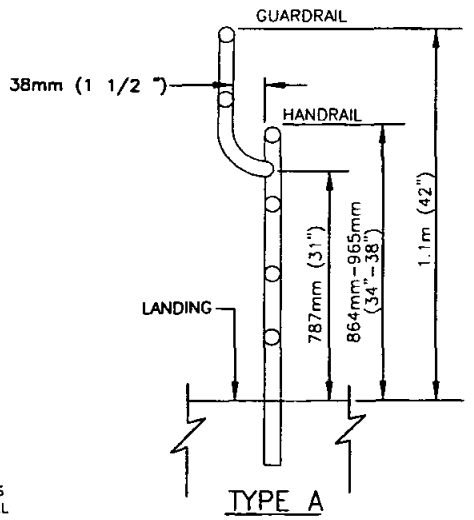

TYPE A
GUARDRAIL EXTENSION

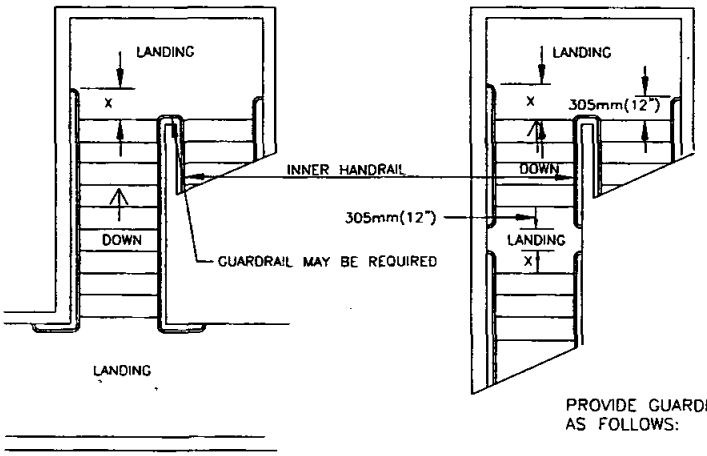

STAIR HANDRAILS

PROVIDE GUARDRAIL EXTENSIONS AS FOLLOWS:

1. TYPE A ON OPEN SIDE OF ALL LANDINGS MORE THAN 762mm(30") ABOVE GRADE OR FLOOR BELOW.
2. TYPE B ON OPEN SIDE OF STAIRS (INCLUDING LANDINGS) WHEN SPECIFIED.

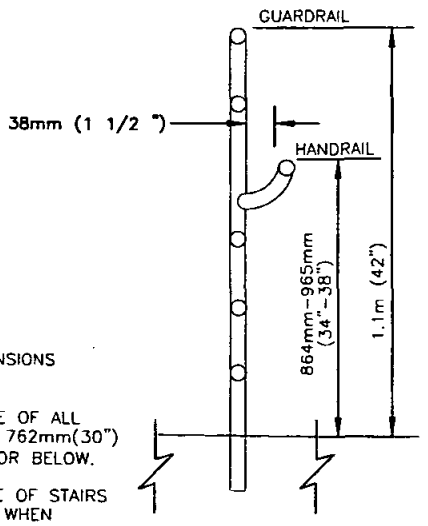

TYPE B
GUARDRAIL EXTENSION

NOTES

1. Post type guardrails, and handrails for stairs or landings 762mm(30") or less above grade or floor below shall have only one intermediate rail centered between the step nosing limit (or if specified the top of curb) and top of railing.
2. Post type guardrails, and handrails for stairs or landings more than 762mm(30") above grade or floor below shall have intermediate rails equally spaced such that a sphere 102mm(4") in diameter cannot pass through.
3. Where handrail extensions interfere with transverse walkways the horizontal portions shall not encroach but be turned away from stairs and parallel to walkway.
4. The top of guardrails for stairways, exclusive of their landings, may have a height as specified for handrails.

Revision	By	Approved	Date
ORIGINAL		G.Parkinson	2/95
Add Metric		T. Stanton	03/03

SAN DIEGO REGIONAL STANDARD DRAWING

PEDESTRIAN PROTECTIVE RAILING DETAILS No. 2

RECOMMENDED BY THE SAN DIEGO REGIONAL STANDARDS COMMITTEE

T. Stanton 3/10/2003

Chairperson R.C.E. 19246 Date

DRAWING NUMBER M-25

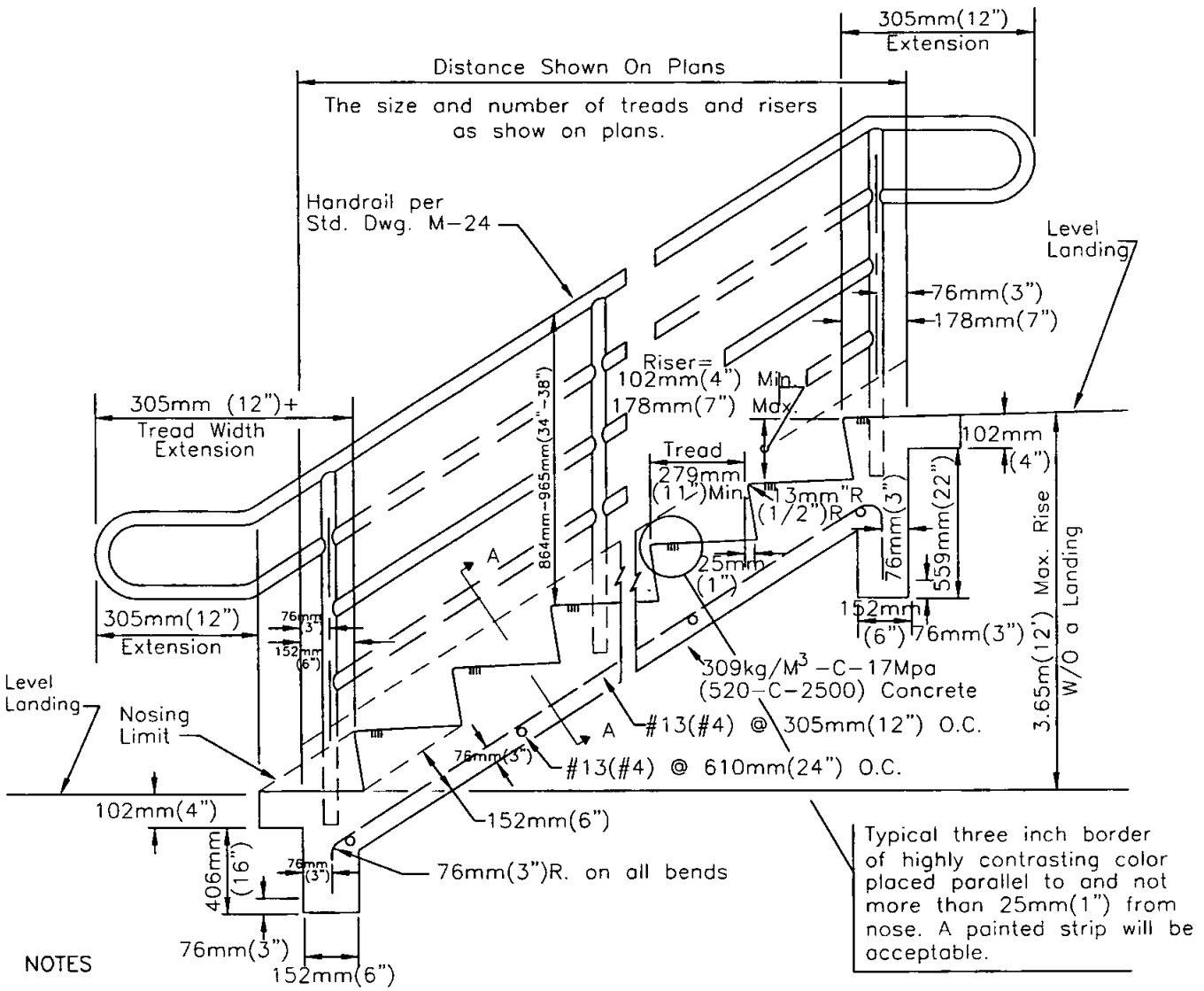

NOTES

1. Broom finish on treads, trowel finish on all other exposed surfaces.
2. 6mm(1/4") per 305mm(1') slope on treads for drainage.
3. Locate handrails on both sides.
4. Handrail may project into the required width a distance of 89mm(3-1/2") from each side of stairway.

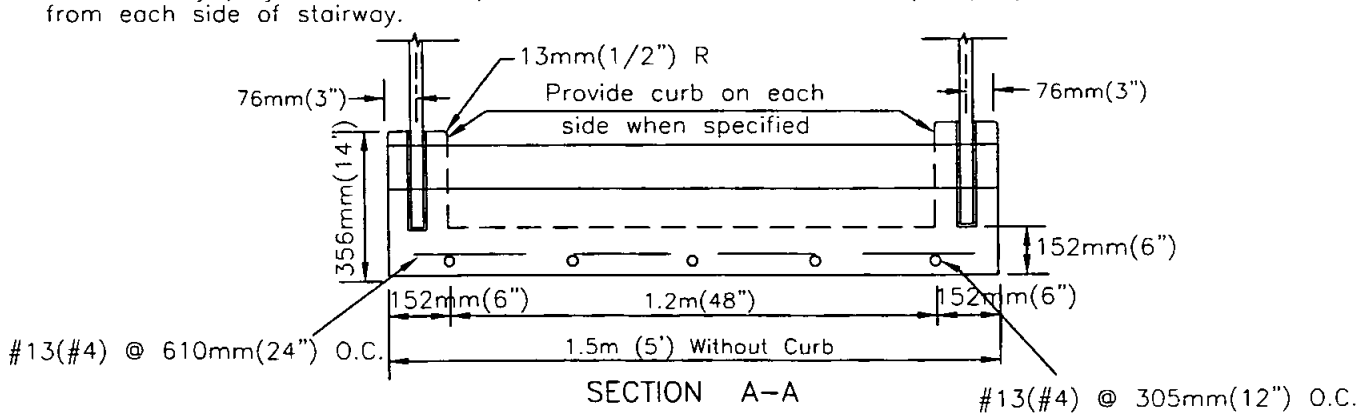

SECTION A-A

Revision	By	Approved	Date
ORIGINAL		G.Parkinson	2/95
Add Metric		T. Stanton	03/03

SAN DIEGO REGIONAL STANDARD DRAWING

CONCRETE STEPS

RECOMMENDED BY THE SAN DIEGO REGIONAL STANDARDS COMMITTEE

T. Stanton 3/10/2003

Chairperson R.C.E. 19246 Date

DRAWING NUMBER M-26

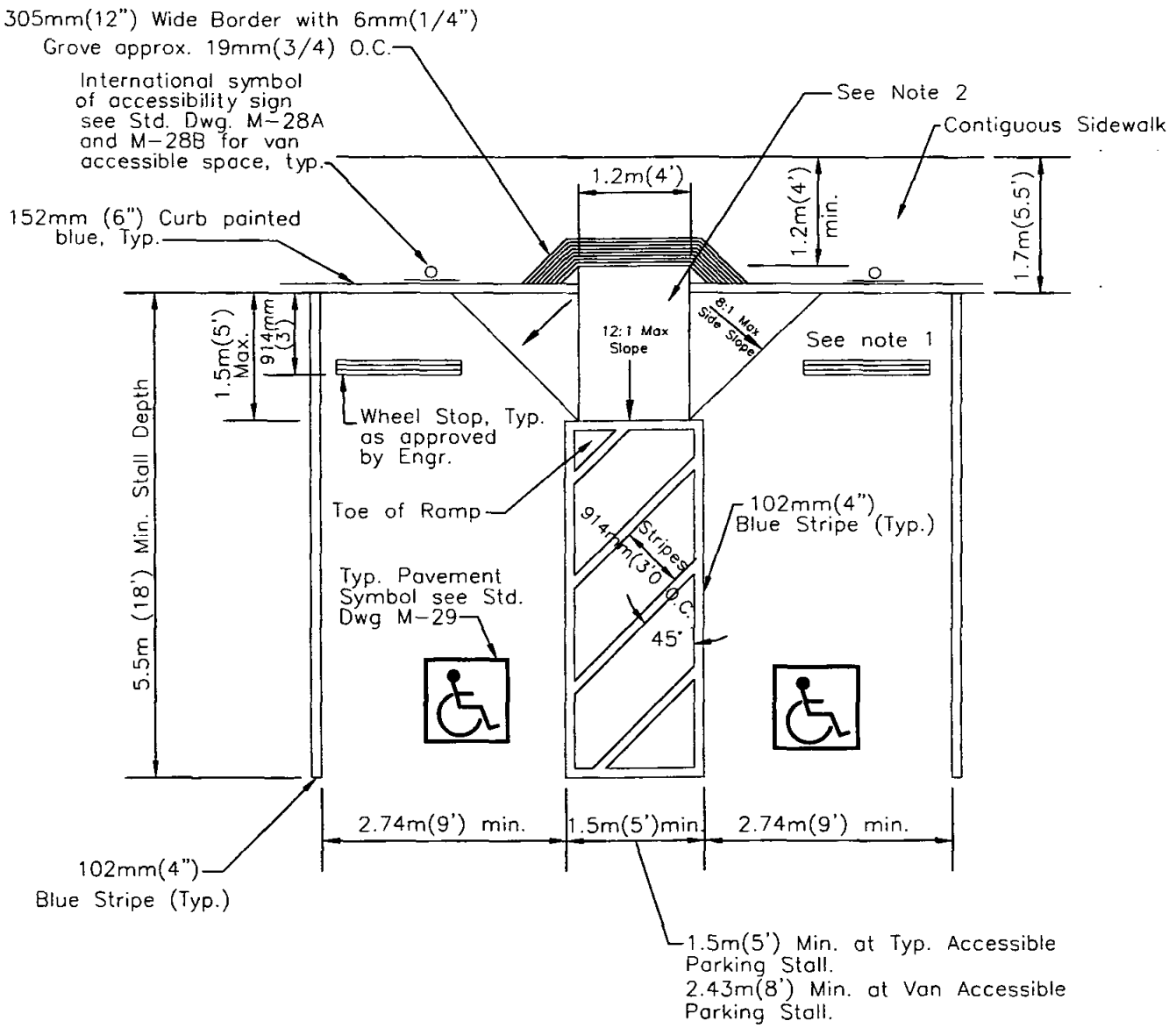

NOTES:

1. Provide for adequate drainage.
2. For appropriate ramp alternate to conform to topographical conditions, see Std. Dwg. G-27 through G-31.
3. Slope shall not exceed 2% in any direction unless there is equivalent facilitation.
4. Blue color should match color No. 15090 in the Federal Standard 595a as specified in Section 522(b)2.

Revision	By	Approved	Date
ORIGINAL		G.Parkinson	2/95
Add Metric		T. Stanton	03/03

SAN DIEGO REGIONAL STANDARD DRAWING

DISABLED PARKING STALL(S)

RECOMMENDED BY THE SAN DIEGO REGIONAL STANDARDS COMMITTEE

T. Stanton 3/10/2003

Chairperson R.C.E. 19246 Date

DRAWING NUMBER M-27A

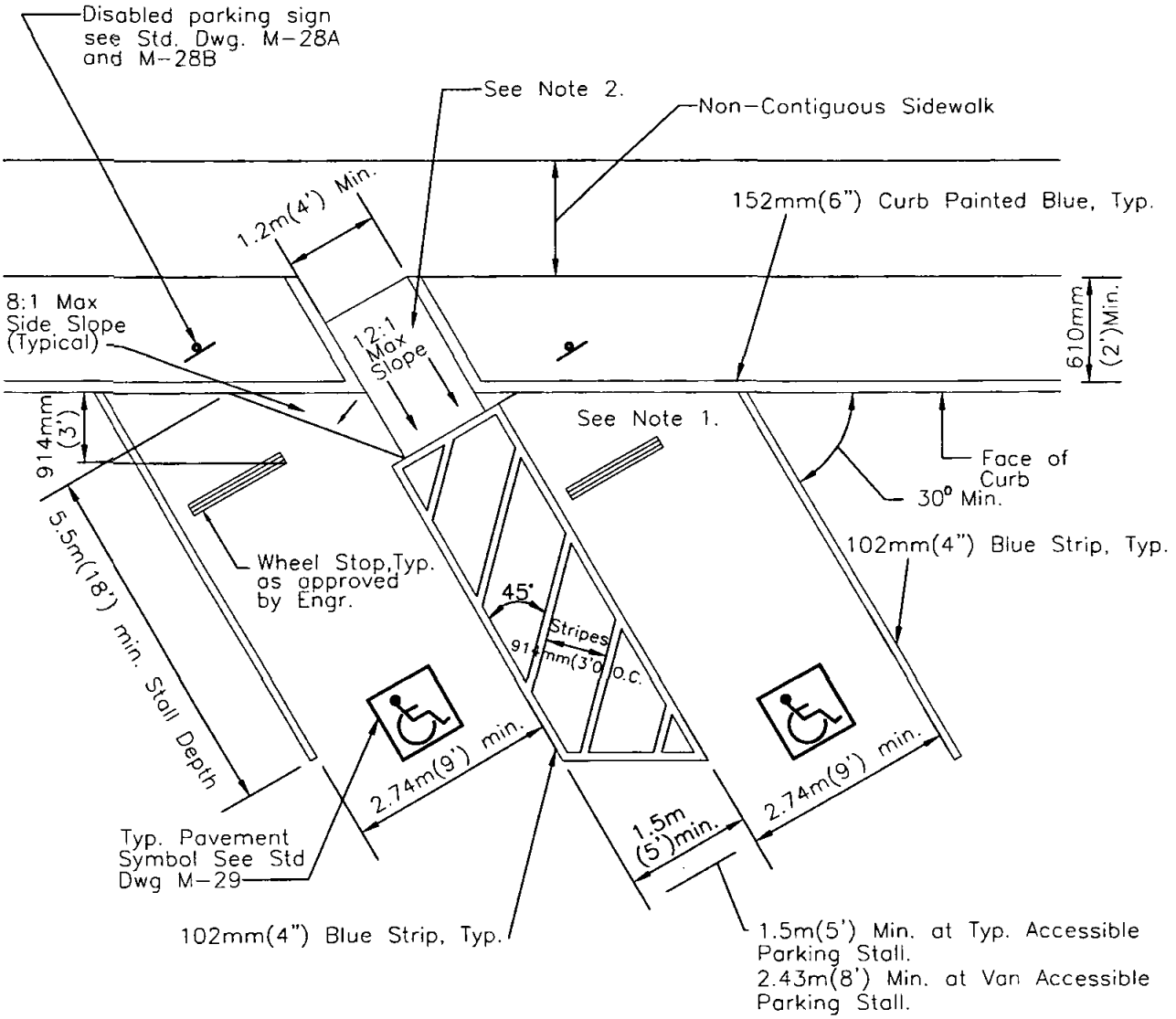

NOTES:

1. Provide for adequate drainage
2. See Std. Dwg G-27 through G-31. For appropriate ramp alternate to conform to topographical conditions.

Revision	By	Approved	Date
ORIGINAL		G.Parkinson	2/95
Add Metric		T. Stanton	03/03

SAN DIEGO REGIONAL STANDARD DRAWING

DIAGONAL DISABLED PARKING STALL(S)

RECOMMENDED BY THE SAN DIEGO REGIONAL STANDARDS COMMITTEE

T. Stanton 3/01/2003

Chairperson R.C.E. 19246 Date

DRAWING NUMBER M-27B

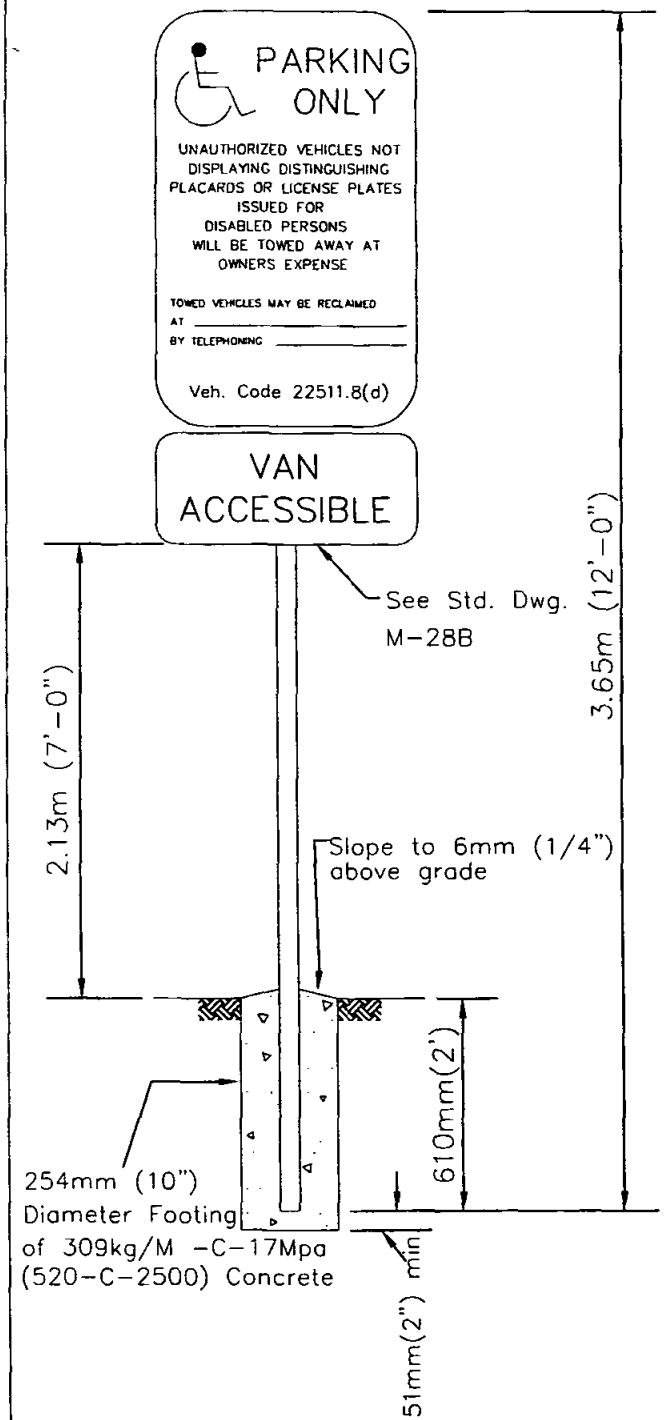

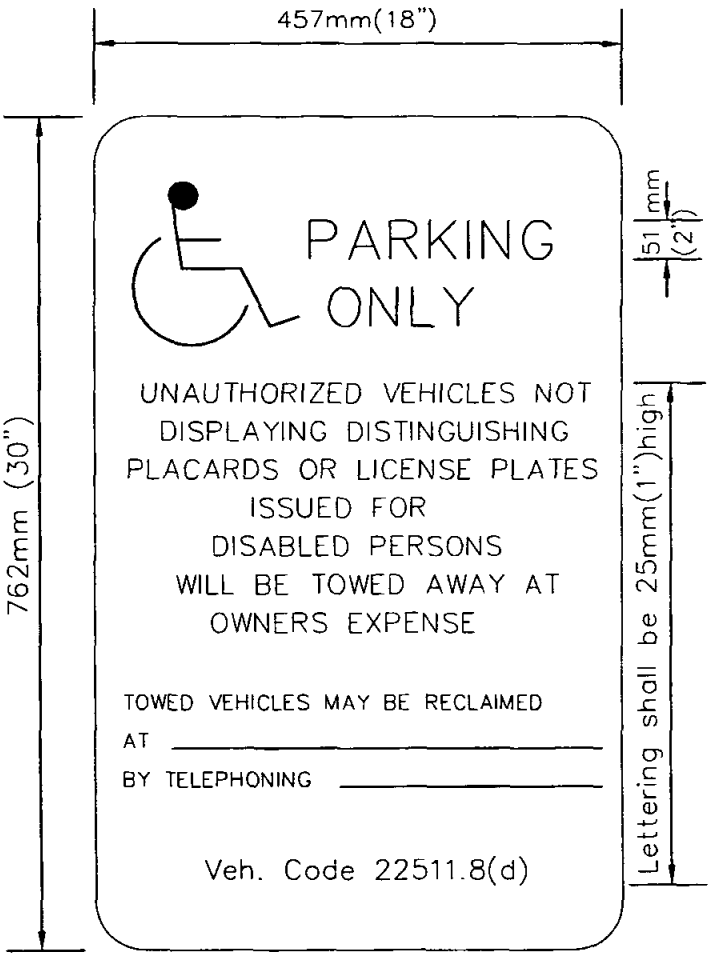

SIGN DETAIL

NOTES:

1. Sign shall be constructed of a minimum 1.57mm (0.062") thick aluminum.
2. Lettering, symbol and border shall be reflectorized white, on a blue background.
3. Lettering shall be 25mm (1") and 51mm (2") high.
4. Where space is designed for van accessibility, a sign "VAN ACCESSIBLE" shall be installed.
5. Minimum van accessible vertical clearance is 2.5m (8'-2").

Revision	By	Approved	Date
ORIGINAL		G.Parkinson	2/95
Add Metric		T. Stanton	03/03

SAN DIEGO REGIONAL STANDARD DRAWING

DISABLED PARKING SIGN

RECOMMENDED BY THE SAN DIEGO REGIONAL STANDARDS COMMITTEE

T. Stanton 3/01/2003

Chairperson R.C.E. 19246 Date

DRAWING NUMBER M-28A

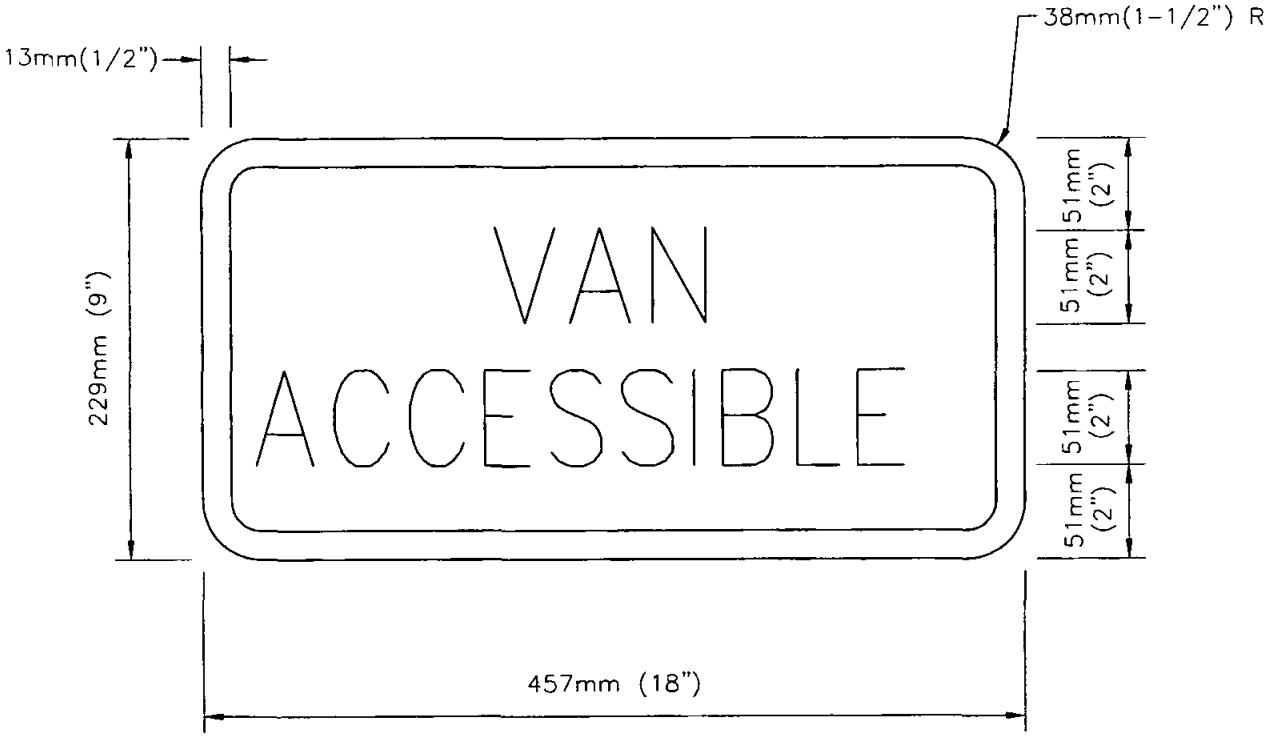

NOTES

1. Sign shall be constructed of aluminum, 1.57mm (0.062") minimum thickness.
2. Colors: Background–Reflectorized Blue
   Border and letters– Reflectorized White
   Blue color shall match color No. 15090 in the Federal Standard 595a as specified in Section 522(b)2.

Revision	By	Approved	Date
ORIGINAL		G.Parkinson	2/95
Add Metric		T. Stanton	03/03

SAN DIEGO REGIONAL STANDARD DRAWING

VAN ACCESSIBLE SIGN
FOR DISABLED PARKING SPACE

RECOMMENDED BY THE SAN DIEGO REGIONAL STANDARDS COMMITTEE

T. Stanton 3/10/2003

Chairperson R.C.E. 19246 Date

DRAWING NUMBER M-28B

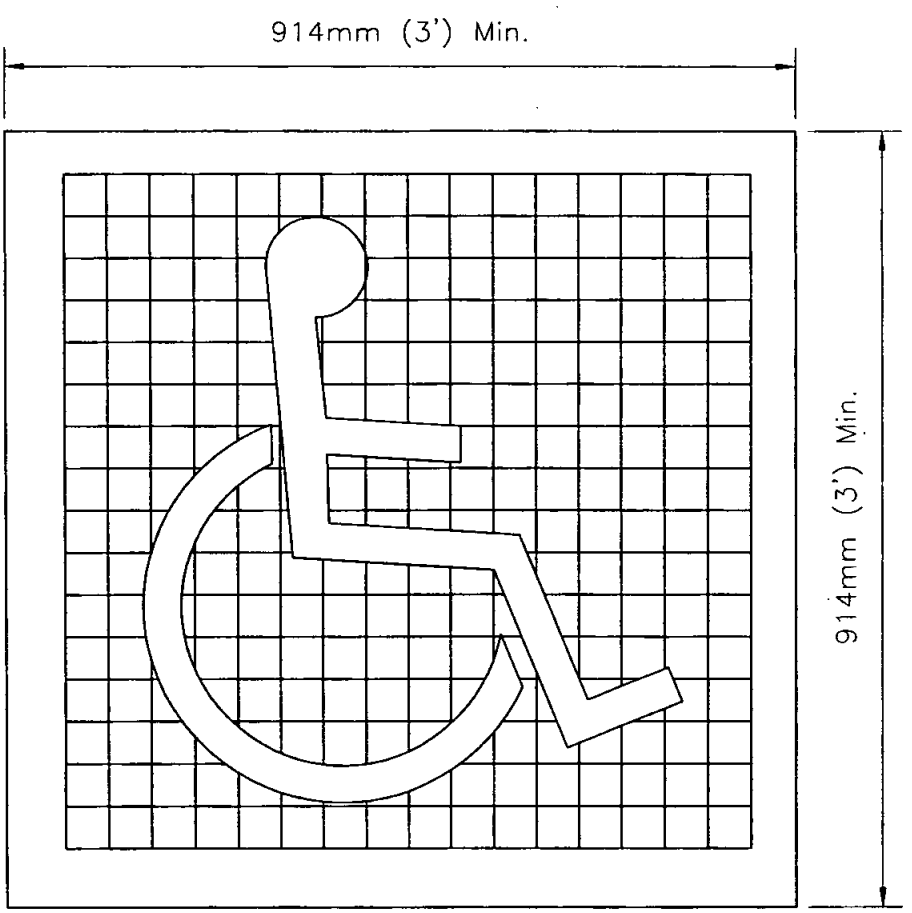

(a) SYMBOL PROPORTIONS

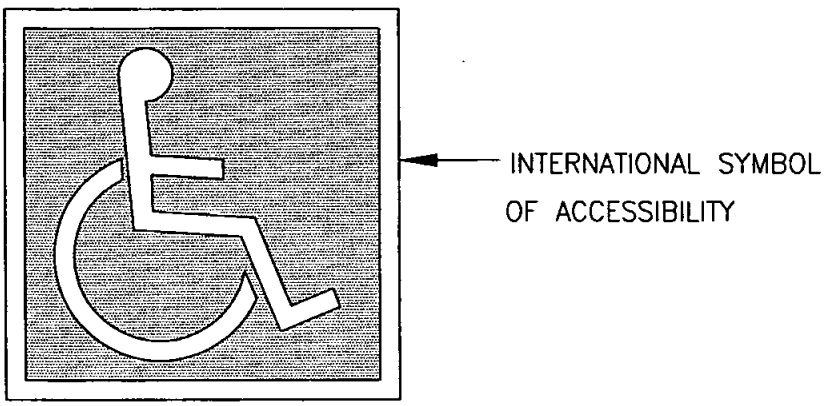

(b) DISPLAY CONDITIONS

NOTES

1. Pavement symbol shall be painted white on a blue background.
2. Blue color shall match color No. 15090 in the Federal Standard 595a as specified in Section 522(b)2.

Revision	By	Approved	Date
ORIGINAL		G.Parkinson	2/95
Add Metric		T. Stanton	03/03

SAN DIEGO REGIONAL STANDARD DRAWING

PAVEMENT SYMBOL - DISABLED PARKING

RECOMMENDED BY THE SAN DIEGO REGIONAL STANDARDS COMMITTEE

T. Stanton 3/01/2003

Chairperson R.C.E. 19246 Date

DRAWING NUMBER M-29

This 2003 edition drawing is NOT in conformance with the latest Caltrans Standard Plans for Guardrails. Use Caltrans latest Standard Plans or seek Agency permission before using this drawing.

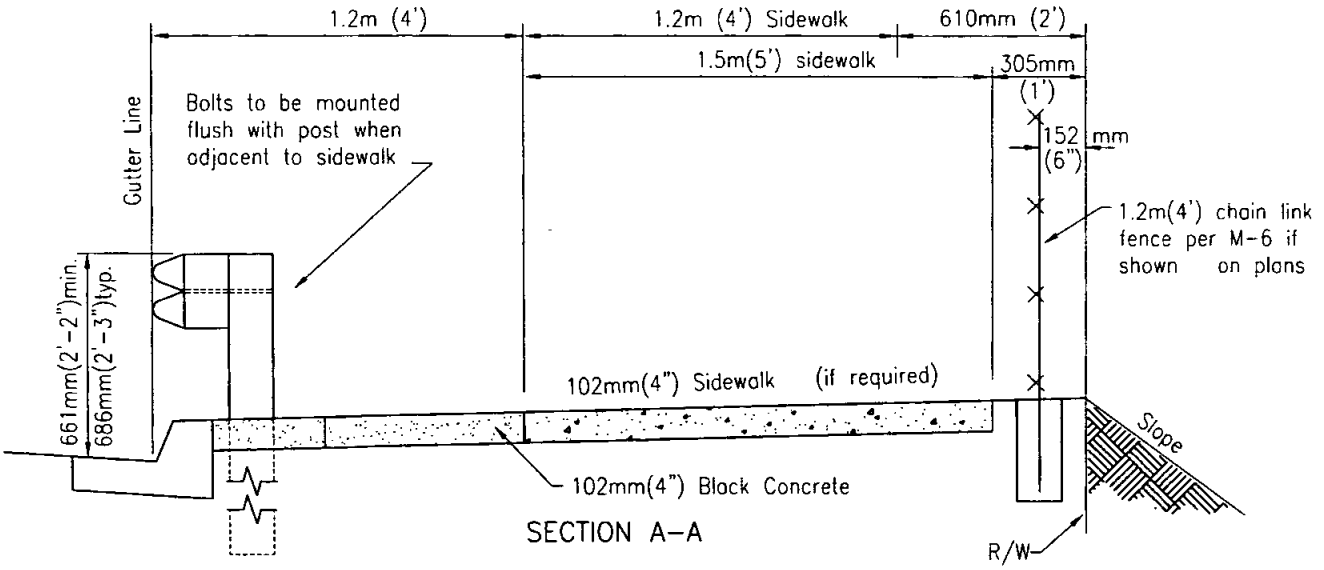

Typical for above ground obtructions-4:1 sidewalk transitions typical for use with G-7

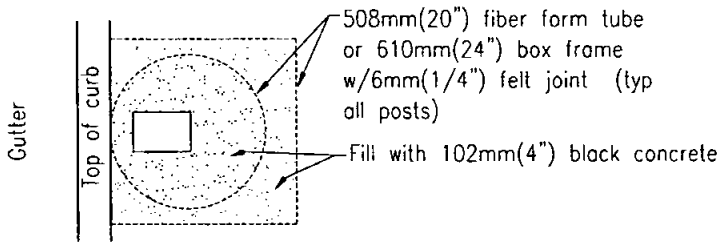

DETAIL OF POST KNOCKOUT

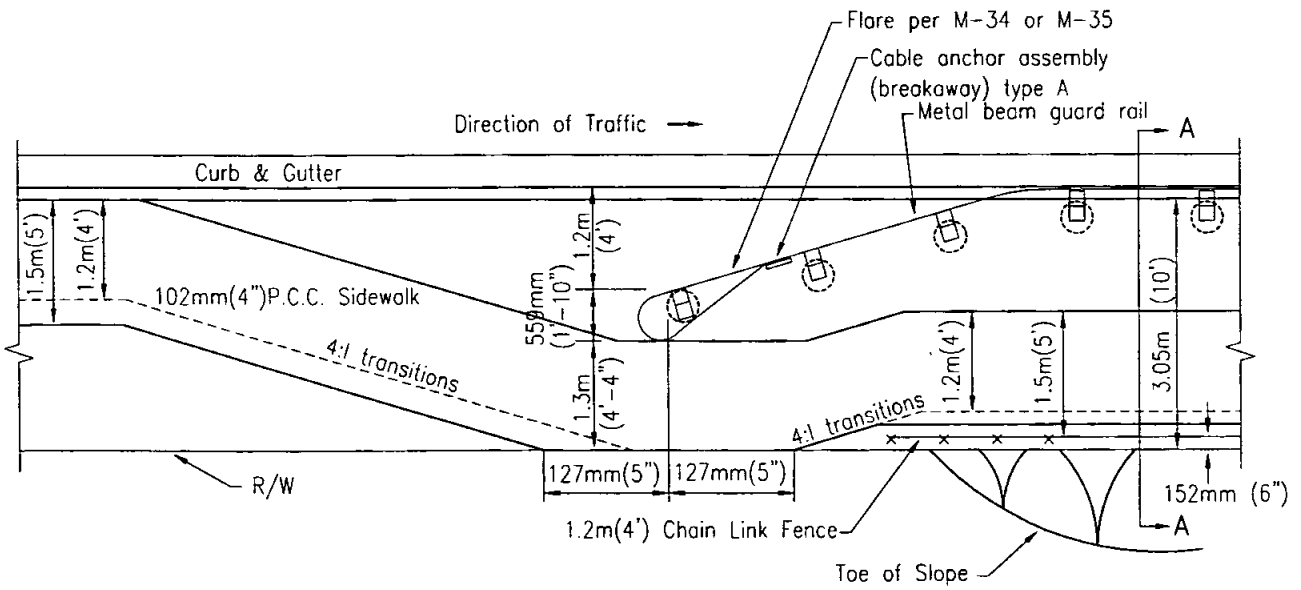

Revision	By	Approved	Date
ORIGINAL		G.Parkinson	5/92
Add Metric		T. Stanton	03/03

SAN DIEGO REGIONAL STANDARD DRAWING

GUARD RAIL STANDARDS

RECOMMENDED BY THE SAN DIEGO REGIONAL STANDARDS COMMITTEE

T. Stanton 3/01/2003

Chairperson R.C.E. 19246 Date

DRAWING NUMBER M-30

Revision	By	Approved	Date
ORIGINAL			
Add Metric		G.Parkinson	4/92
		T. Stanton	03/03

SAN DIEGO REGIONAL STANDARD DRAWING

METAL BEAM GUARD RAILING

This 2003 edition drawing is NOT in conformance with the latest Caltrans Standard Plans for Guardrails. Use Caltrans latest Standard Plans or seek Agency permission before using this drawing.

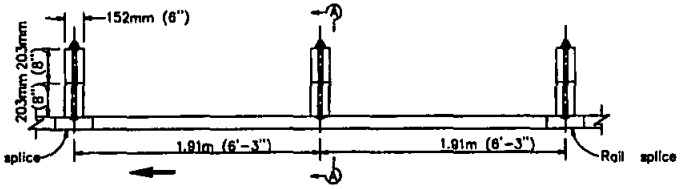

PLAN

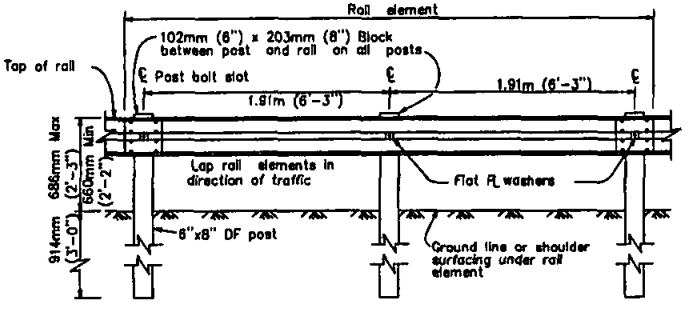

ELEVATION

METAL BEAM GUARD RAIL WITH WOOD POST AND BLOCKS

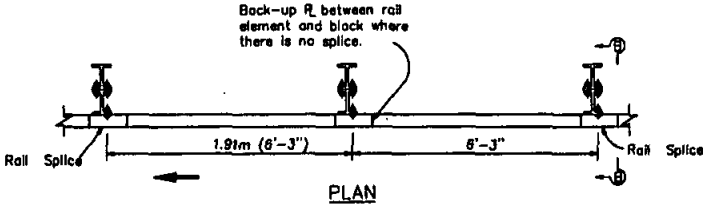

PLAN

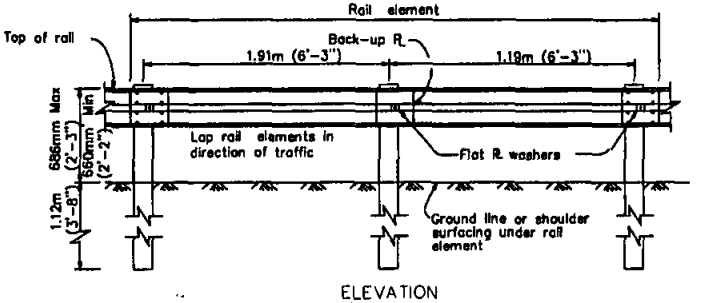

ELEVATION

METAL BEAM GUARD RAIL WITH W6x8.5 OR W6x9 STEEL POSTS AND BLOCKS

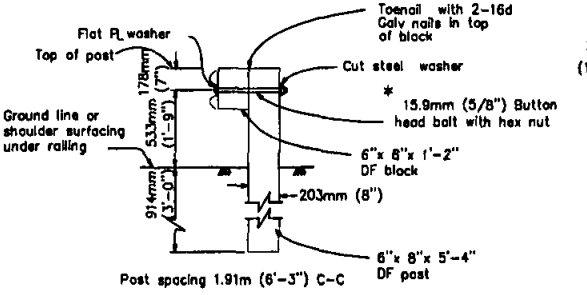

SECTION A-A

* Where bolt is reversed or 15.9mm (5/8 ") threaded rod is used to mount rail, no more than 13mm (1/2 ") of thread may be exposed on traffic side of rail.

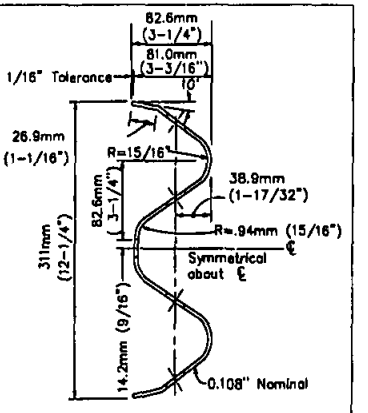

SECTION THRU RAIL ELEMENT

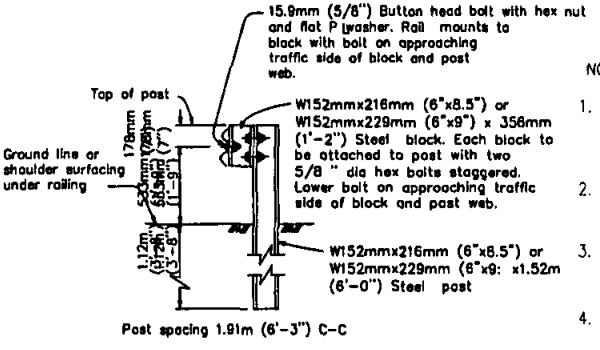

SECTION B-B

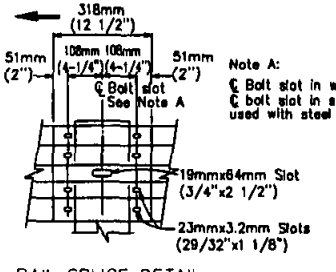

RAIL SPLICE DETAIL
ELEVATION VIEW

Splice the overlapped ends of the rail elements with 15.9mm (5/8")x 31.8mm (1 1/4") button head oval shoulder bolts and 15.9mm (5/8")x 38mm (1 1/4") recessed hex nut in the 23mm (29/32")x 28.6mm (1 1/8") slots. Total 8 per rail splice; 4 per terminal section and end section. Lap rail elements in direction of traffic.

NOTES

1. For details of standard hardware used to construct guard railing, see Std. Dwg. M-32.
2. For details of posts and blocks used to construct guard railing, see Std. Dwg. M-33.
3. Guard railing post spacing to be 1.91m (6'-3") center to center, except as otherwise
4. noted.
   Top of rail to be 686mm (27") above the ground line or shoulder surfacing under the
5. rail element.
   For guard railing approach flares, see Std. Dwg. M-34
6. and M-35.
   For embankment widening details to accommodate guard railing approach flares, see
7. Standard Dwg. M-36.
   For guard railing and anchor details, see Std. Dwg. M-37
8. and M-39.
   For guard railing connection details to bridge railing, retaining walls and abutments,
9. see Std. Dwg. M-40.
   For guard railing connection details to bridge sidewalks and
10. curbs, see Std. Dwg. M-41.
    For dike positioning with guard railing installations, see Std.
11. Dwg M-36.
    Direction of traffic indicated by

RECOMMENDED BY THE SAN DIEGO REGIONAL STANDARDS COMMITTEE

Chairperson R.C.E. 19246 Date 3/10/2003

DRAWING NUMBER M-31

This 2003 edition drawing is NOT in conformance with the latest Caltrans Standard Plans for Guardrails. Use Caltrans latest Standard Plans or seek Agency permission before using this drawing.

NOTES

1. Terminal sections will not be installed on the trailing end of guard railing placed adjacent to one-way roadways.
2. Back-up plate to be used between guard rail element and steel block on steel post where there is no rail element splice. See Standard Dwg. M-31.
3. For end sections details, see Standard Dwg. M-40.
4. For terminal section Type C. see Standard Dwg. M-38.

L	THREADED LENGTH
	31.8mm (1-1/4") Full Thread Length
51mm (2")	38.1mm (1-1/2") min. Thread Length
241mm (9-1/2")	44.5mm (1-3/4") min. Thread Length
305mm12"	63.5mm (2-1/2") min. Thread Length

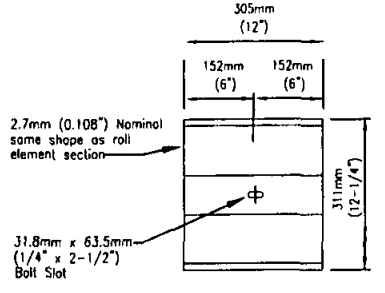

BACK-UP PLATE

See Note 2

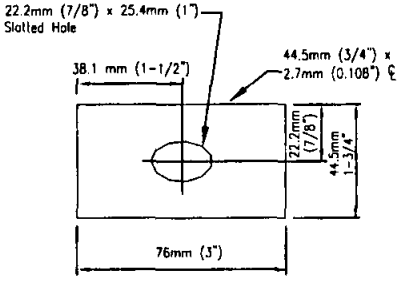

FLAT PLATE WASHER

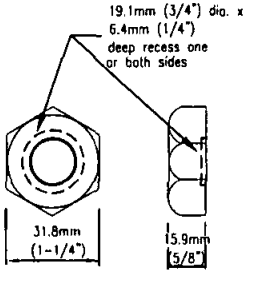

15.9mm (5/8") O RECESS NUT

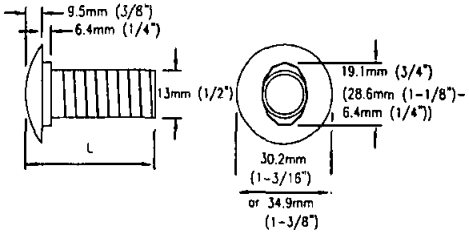

5/8" Ø BUTTON HEAD BOLT

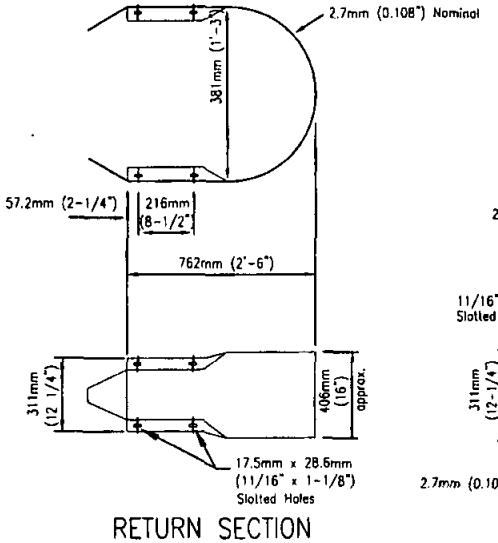

RETURN SECTION

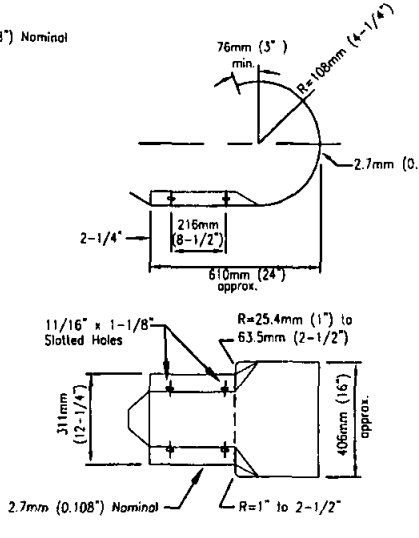

TERMINAL SECTION

TYPE A

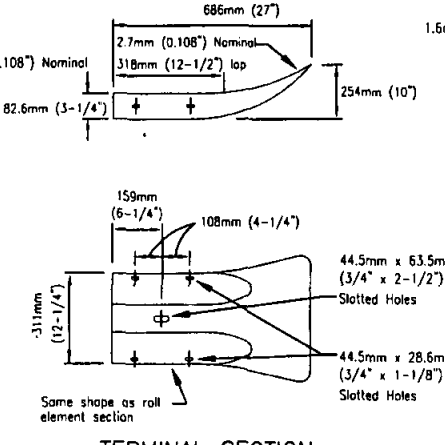

TERMINAL SECTION

TYPE B

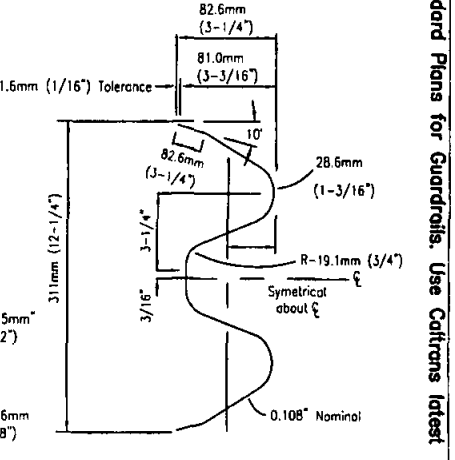

SECTION THRU

RAIL ELEMENT

Revision	By	Approved	Date
ORIGINAL		G.Parkinson	4/92
Add Metric		T. Stanton	03/03

SAN DIEGO REGIONAL STANDARD DRAWING

METAL BEAM GUARD RAILING

STANDARD HARDWARE

RECOMMENDED BY THE SAN DIEGO REGIONAL STANDARDS COMMITTEE

Chairperson R.C.E. 19246 Date 3/10/2003

DRAWING NUMBER M-32

This 2003 edition drawing is NOT in conformance with the latest Caltrans Standard Plans for Guardrails. Use Caltrans latest Standard Plans or seek Agency permission before using this drawing.

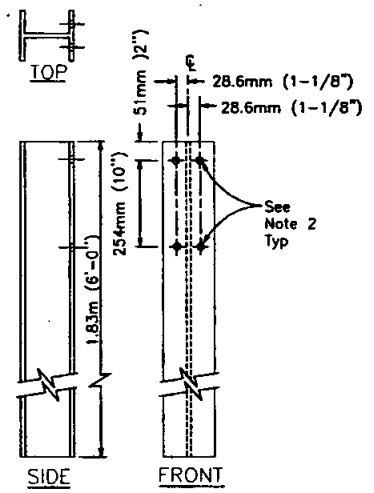

W6x15 STEEL POST

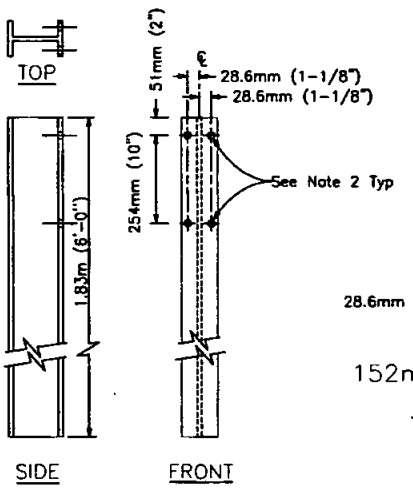

W6x8.5 OR W6x9 STEEL POST

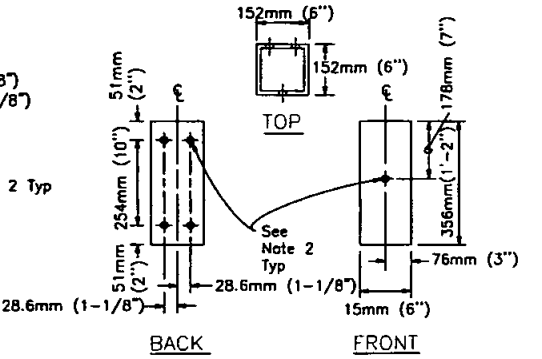

152mmx152mmx356mm (6"x6"x1'-2")
(4.8mm (0.1875") THICK)

TUBULAR STEEL BLOCK

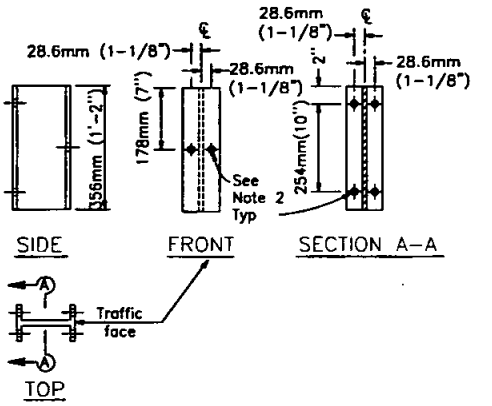

W6x8.5 OR W6x9 STEEL BLOCK

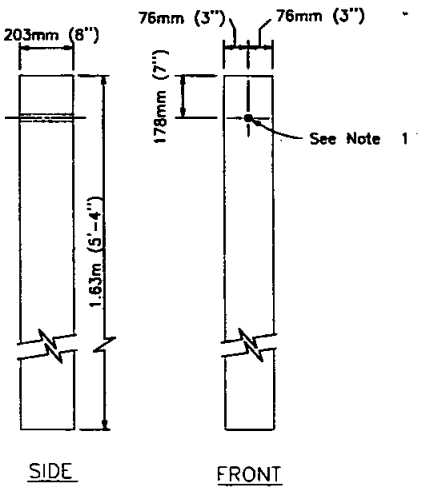

6"x 8" DOUGLAS FIR POST

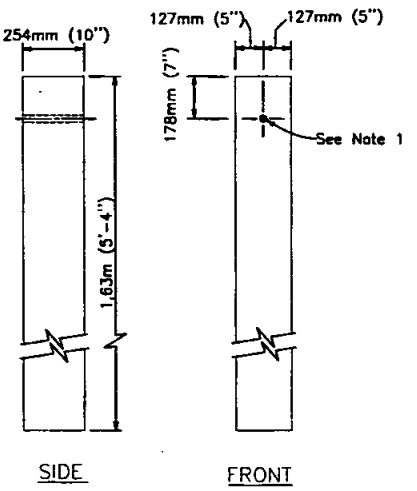

10"x 10" DOUGLAS FIR POST

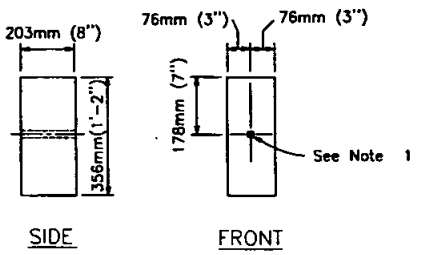

6"x 8" DOUGLAS FIR BLOCK

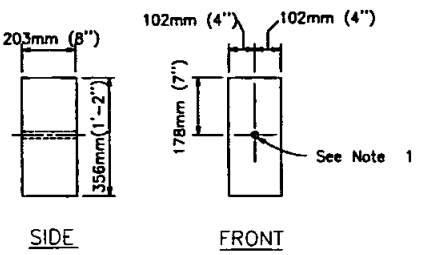

8"x 8" DOUGLAS FIR BLOCK

NOTES

1. All holes in wood posts and blocks shall be 44.5mm (3/4")
2. dia.±1.6mm (1/16"). All holes in steel posts and blocks shall be 20.6mm (13/16) dia. maximum.
3. Contractor may submit alternative steel post details for Engineer's approval.
4. Dimensions shown for wood post are nominal.

Revision	By	Approved	Date
ORIGINAL		G.Parkinson	4/92
Add Metric		T. Stanton	03/03

SAN DIEGO REGIONAL STANDARD DRAWING

METAL BEAM GUARD RAILING
POSTS AND BLOCKS

RECOMMENDED BY THE SAN DIEGO REGIONAL STANDARDS COMMITTEE

T. Stanton 3/10/2003

Chairperson R.C.E. 19246 Date

DRAWING NUMBER M-33

This 2003 edition drawing is NOT in conformance with the latest Caltrans Standard Plans for Guardrails. Use Caltrans latest Standard Plans or seek Agency permission before using this drawing.

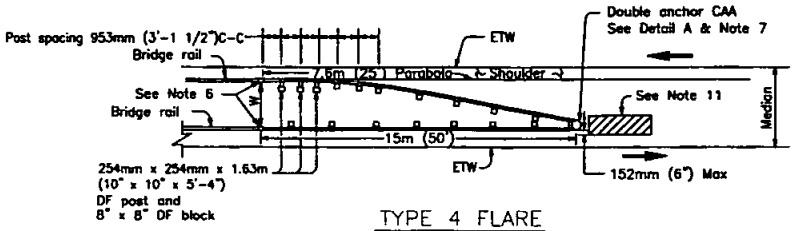

TYPE 4 FLARE

See Note 3

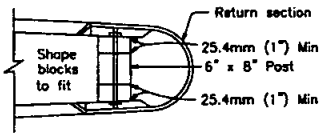

DETAIL A

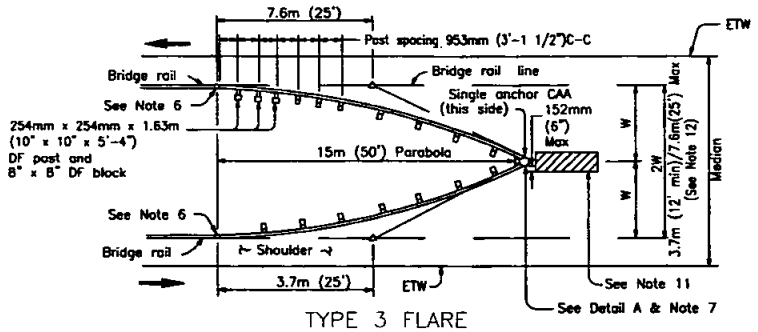

TYPE 3 FLARE

See Note 3

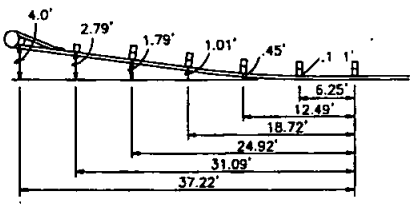

37'-6" PARABOLIC OFFSETS

(Parabolic offsets not to be used with Type 1M flares)

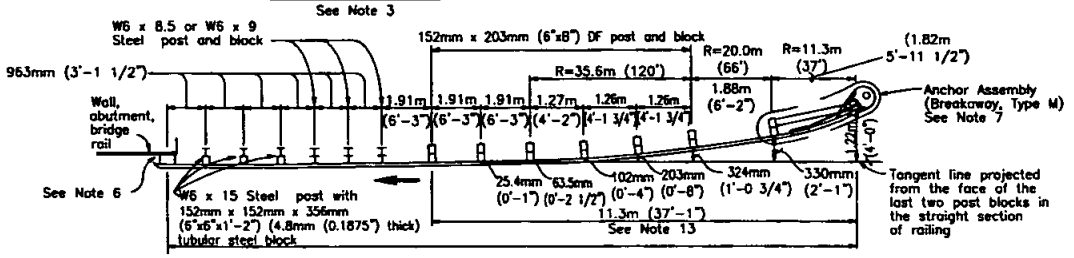

TYPE 1M FLARE

(STEEL POST INSTALLATION)

See Notes 9 and 13

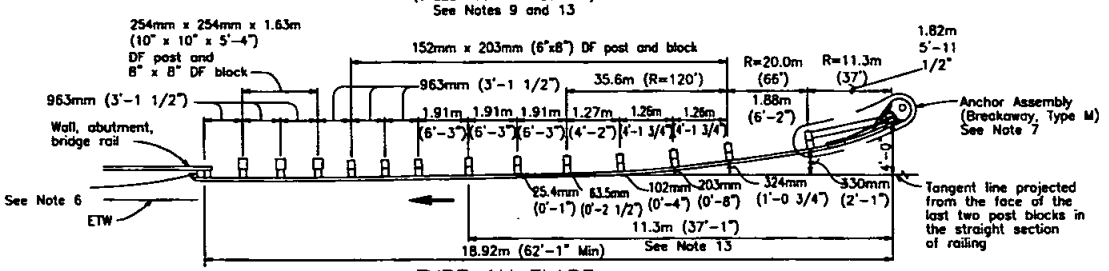

TYPE 1M FLARE

(WOOD POST INSTALLATION)

See Notes 9 and 13

CAA = Cable Anchor Assembly

NOTES

1. Post, blocks and hardware to be used are shown on Standard Drawing M-31 and M-32.
2. Guard rail post spacing to be 1.91m (6'-3") center to center, except as otherwise noted.
3. Except as noted, posts shown are 152mm x 203mm (6" x 8") DF. W6 x 8.5 or W6 x 9 steel posts and blocks may be specified for 152mm x 203mm (6" x 8") DF posts and blocks where applicable. Where 254mm x 254mm (10" x 10") DF posts and 8" x 8" DF blocks are shown, W6 x 15 steel posts and tubular steel 152mm x 152mm x 356mm (6" x 6" x 1'-2") (4.8mm (0.1875 inch) thick) blocks may be specified where applicable.
4. Top of rail to be 686mm (27") above ground line or shoulder surfacing under the rail element.
5. Direction of traffic indicated by
6. For connection details see Standard Drawing M-40 and M-41.
7. For end anchor details see Standard Drawing M-37 and M-39.
8. Terminal Sections not to be installed on trailing end of guard rail placed adjacent to one-way roadways.
9. The 11.3m (37'-1") flared portion of Type 1M Flare is used at approach end of guard railing for embankment installations.
10. For embankment widening details to accomodate approach flares, see Revised Standard Drawing M-36.
11. Sand filled crash cushion, as shown on Standard Plan A81, or other crash cushion approved by the Engineer is required for Type 3 and 4 flares, when the end of the guard rail is within 9m (30 feet) of the edge of traveled way (ETW) of approaching traffic. ⟶
12. When width W, exceeds 3.7m (12 feet); to calculate the length of parabolic flare use "L=3W" and round to nearest 3.81m (12'-6").
13. For additional requirements for the Type 1M flare installations see Standard Drawing M-37.

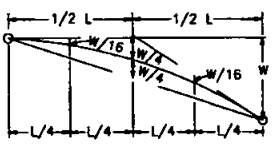

TYPICAL PARABOLIC LAYOUT

Revision	By	Approved	Date
ORIGINAL		G.Parkinson	4/92
Add Metric		T. Stanton	03/03

SAN DIEGO REGIONAL STANDARD DRAWING

GUARD RAIL FLARES

RECOMMENDED BY THE SAN DIEGO REGIONAL STANDARDS COMMITTEE

3/01/2003

Chairperson R.C.E. 19246 Date

DRAWING NUMBER M-34

This 2003 edition drawing is NOT in conformance with the latest Caltrans Standard Plans for Guardrails. Use Caltrans latest Standard Plans or seek Agency permission before using this drawing.

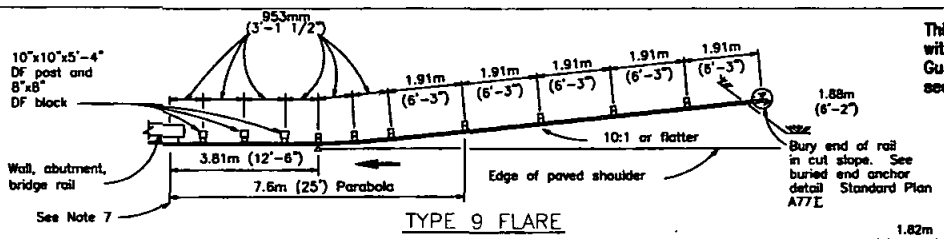

TYPE 9 FLARE

ABBREVIATION

CAA = Cable Anchor Assembly

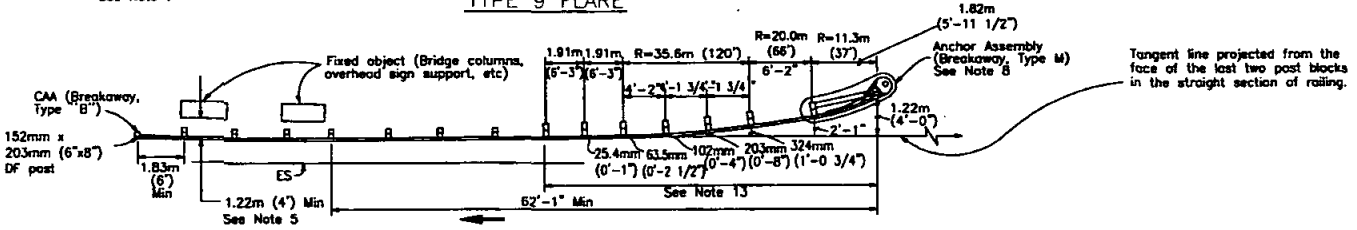

TYPE 8M FLARE

See Note 13

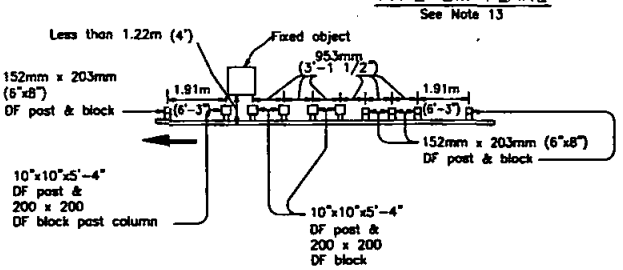

Use with Type 5, 6, and 8M flares when guard rail is less than 4' from fixed object. See Note 5. For a series of columns, additional 254mm x 254mm x 1.63m (10"x10"x5'-4") DF post at 89mm (3'-1 1/2") center to center spacing to be used between columns. Where 254mm x 254mm (10"x10") DF posts and 203mm x 203mm (8"x8") DF blocks are shown, W6x15 steel posts and tubular steel 152mm x 152mm 356mm (6"x6"x1'-2") (4.8mm (0.1875") thick) blocks may be specified where applicable. Where 152mm x 203mm (6"x8") DF posts and blocks are are shown, W6x8.5 or W6x9 steel posts and blocks may be specified where applicable.

APPROACH RAILING TRANSITION DETAIL FOR FIXED OBJECT

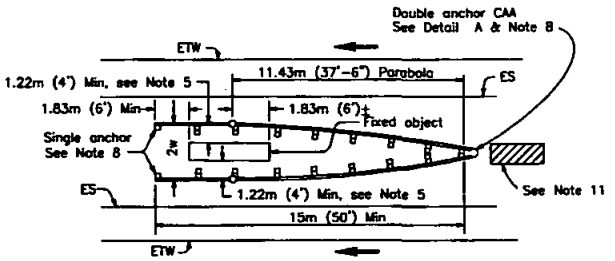

TYPE 6 FLARE

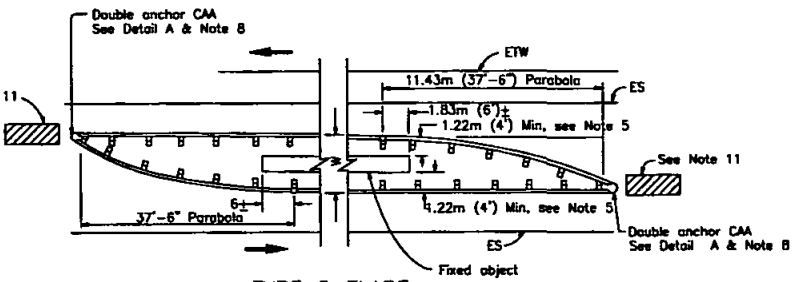

TYPE 5 FLARE

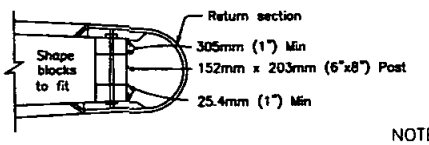

DETAIL A

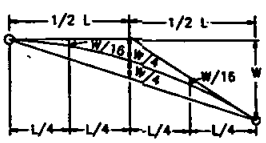

TYPICAL PARABOLIC LAYOUT

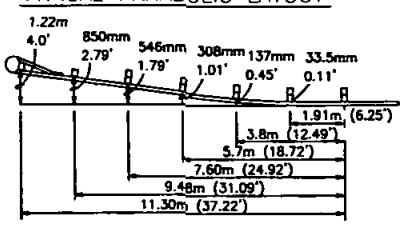

37'-6" PARABOLIC OFFSETS

(Parabolic offsets not to be used with Type 8M flares.)

NOTES

1. Post, blocks and hardware to be used are shown on Standard Drawing M-31 and M-32.
2. Guard rail post spacing to be 1.91m (6'-3") center to center, except as noted.
3. Except as noted, posts and blocks shown are 152mm x 203mm (6"x8") DF. W6x8.5 or W6x9 steel posts and blocks may be specified where applicable. Where 254mm x 254mm (10"x10") DF posts and 203mm x 203mm (8"x8") DF blocks are shown, W6x15 steel post and tubular steel 152mm x 152mm x 356mm (6"x6"x1'-2") (0.1875" thick) blocks may be specified where applicable.
4. Top of rail to be 686mm (27") above ground line or shoulder surfacing under the rail element.
5. A 1.22m (4') minimum clearance is required between face of rail and a fixed object located directly behind a guard rail post.
   A fixed object located behind the rail but not behind a guard rail post requires a 914mm (3') minimum clearance. Where minimum clearance cannot be obtained use approach railing transition details for fixed objects.
6. Direction of traffic indicated by ⟶ .
7. For connection details see Standard Drawing M-40.
8. For end anchor details see Standard Drawingd M-37 and M-39.
9. Terminal sections not to be installed on trailing end of guard rail placed adjacent to one-way roadways.
10. Type 7 flare has been deleted.
11. Sand filled crash cushion, or other crash cushion approved by the Engineer, is required for Type 5 and 6 flares, when the end of the guard rail is within 9.14m (30 feet) of the edge of traveled way (ETW) of approaching traffic.
12. When width, exceeds 3.66m (12 feet); to calculate the length of parabolic flare use "L=3W" and round to nearest 3.81m (12'-6").
13. For additional requirements for the Type 8M flare installations see Standard Drawing M-37.

Revision	By	Approved	Date
ORIGINAL		G.Parkinson	4/92
Add Metric		T. Stanton	03/03

SAN DIEGO REGIONAL STANDARD DRAWING

GUARD RAIL FLARES

RECOMMENDED BY THE SAN DIEGO REGIONAL STANDARDS COMMITTEE

T. Stanton 3/10/2003

Chairperson R.C.E. 19246 Date

DRAWING NUMBER M-35

This 2003 edition drawing is NOT in conformance with the latest Caltrans Standard Plans for Guardrails. Use Caltrans latest Standard Plans or seek Agency permission before using this drawing.

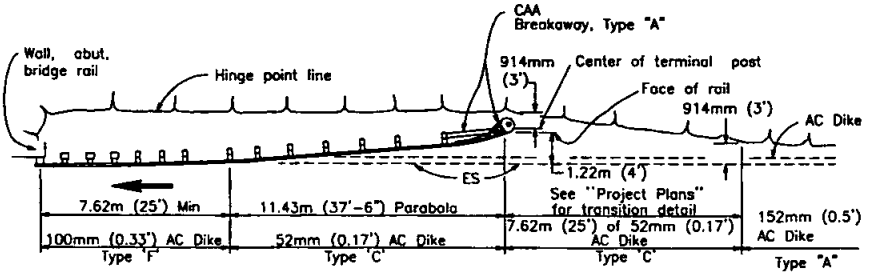

EMBANKMENT WIDENING AND DIKE PLACEMENT DIAGRAM
See Notes 1 and 2

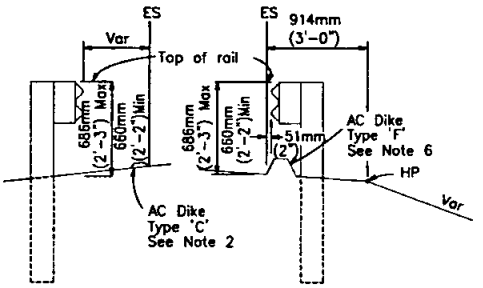

DIKE POSITIONING
(See Note 2)

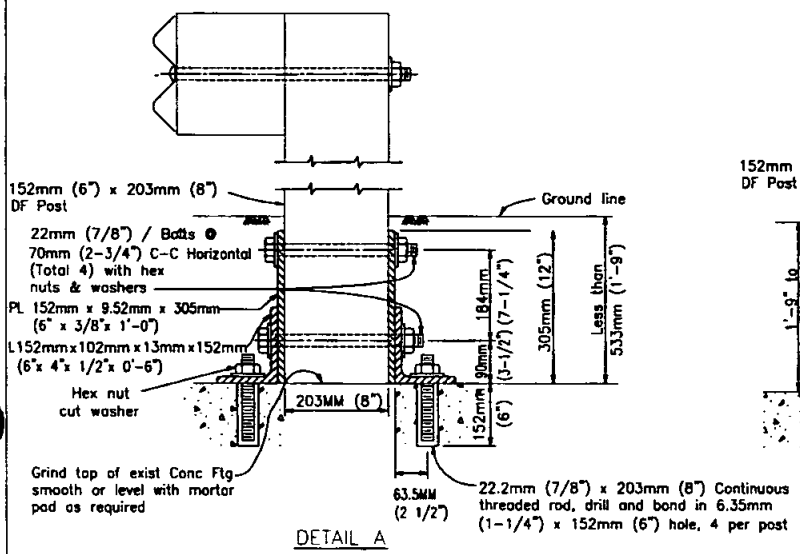

DETAIL A

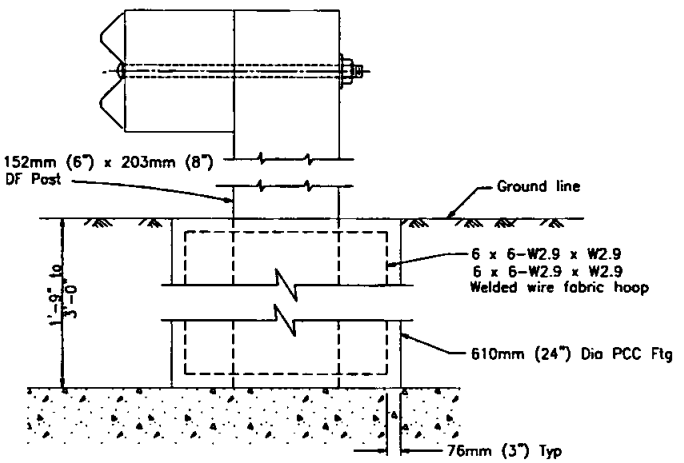

DETAIL B

Form socket in concrete to receive 152mm (6 inch) x 203mm (8 inch) post or place concrete around 152mm (6 inch) x 203mm (8 inch) post wrapped with one layer of 13mm (1/2") thick expanded polystyrene foam sheeting. Do not nail polystyrene to post. Post to be centered in concrete footing.

POST FOOTINGS
(See note 3)

Use where standard embedment of railing post is restricted by underground concrete facilities such as footing of walls, columns, etc. Use Detail A where embedment of post is less than 533mm (1'-9"). Use Detail B where embedment of post is between 533mm (1'-9") and 914mm (3'-0").

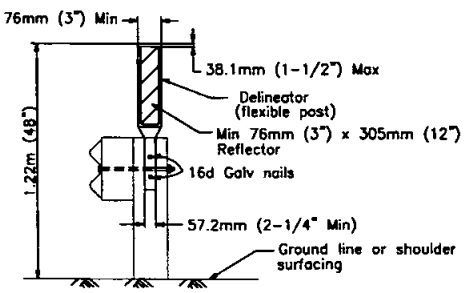

GUARD RAILING DELINEATION
See Note 4

NOTES

1. For guard rail flare details, see Standard Drawings M-34 and M-35.
2. When necessary to place dike in front of guard rail face, only Type 'C' dike may be used. For dike details, see Standard Drawing G-5.
3. For standard railing post embedment, see Standard Drawing M-31.
4. Guard railing delineation to be used where shown on the project plans.
5. Direction of traffic indicated by →
6. When dike or curb is placed under guard railing, the maximum height of the dike or curb shall be 101mm (0.33').

Revision	By	Approved	Date
ORIGINAL		G.Parkinson	4/92
Add Metric		T. Stanton	03/03

SAN DIEGO REGIONAL STANDARD DRAWING

METAL BEAM GUARD RAILING
MISCELLANEOUS DETAILS

RECOMMENDED BY THE SAN DIEGO REGIONAL STANDARDS COMMITTEE

T. Stanton 3/10/2003
Chairperson R.C.E. 19246 Date

DRAWING NUMBER M-36

This 2003 edition drawing is NOT in conformance with the latest Caltrans Standard Plans for Guardrails. Use Caltrans latest Standard Plans or seek Agency permission before using this drawing.

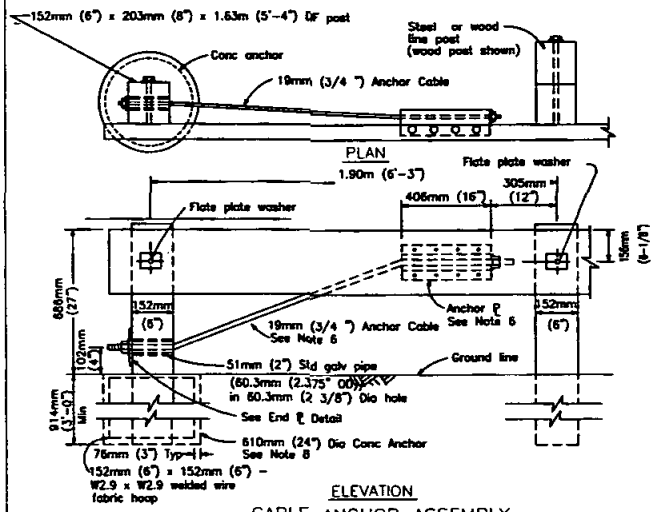

CABLE ANCHOR ASSEMBLY
(BREAKAWAY, TYPE B)

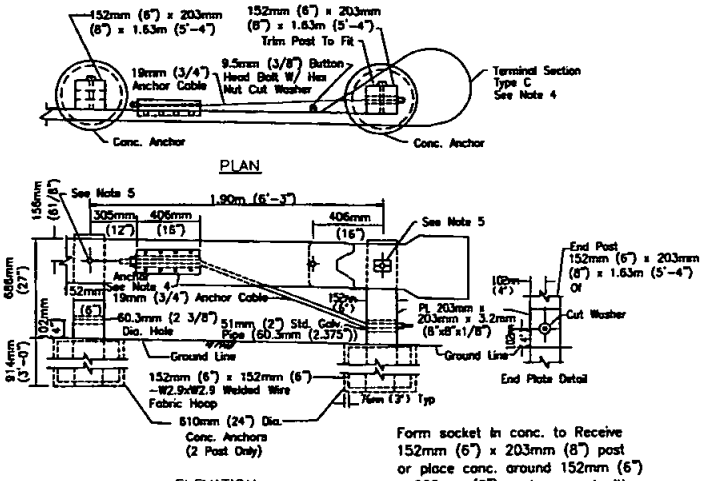

CABLE ANCHOR ASSEMBLY
(BREAKAWAY, TYPE A)

Form socket in conc. to Receive 152mm (6") x 203mm (8") post or place conc. around 152mm (6") x 203mm (8") post wrapped with one layer of 13mm" thick expanded polystyrene foam sheeting. Do not nail polystyrene to post. Post to be centered in conc. footing

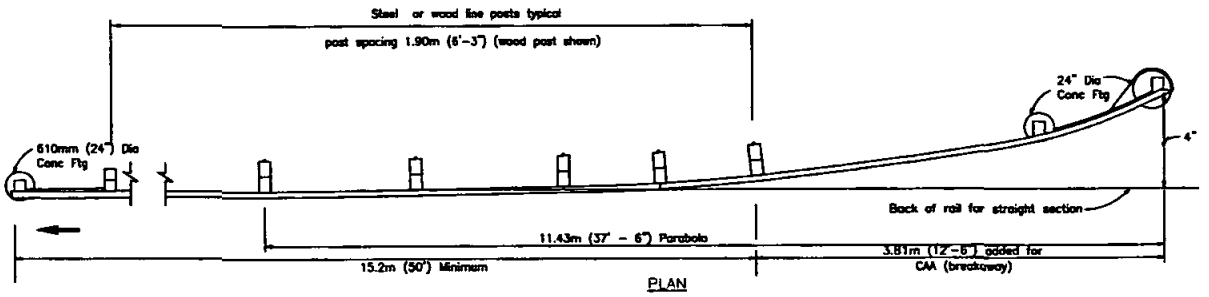

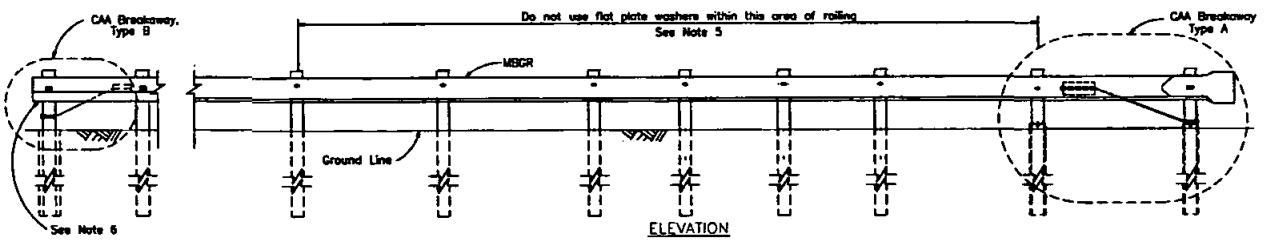

BREAKAWAY
END ANCHORS

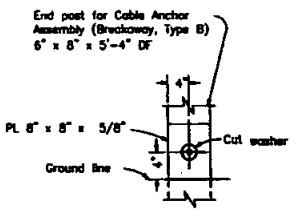

END PLATE DETAIL

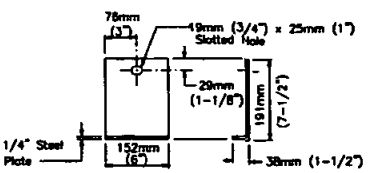

SHELF ANGLE
See Note 5

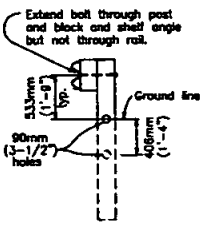

BREAKAWAY POST
(Post Nos. 3, 4, 5 and 6)

NOTES

1. For typical use of cable anchor assembly (Breakaway, Type A), see Revised Standard Drawings M-34 and M-35.
2. Cable anchor assembly (Breakaway, Type B) is typically used on the trailing end of guard railing for embankment installations except two-way road beds less than 18.3m (60 feet) in width.
3. Direction of traffic indicated by ⟶
4. For details of Terminal Section Type C, anchor plate and 19mm (3/4") cable, see Standard Dwg. M-38.
5. Do not use flat plate washers under head of rail mounting bolt at the second anchor post of Type A anchors and next five line posts. Use flat plate washers on other line posts and at the first anchor post of Type A anchor and at the Type B anchor post.
6. For trailing end of guard rail adjacent to one-way roadway omit terminal section.

Revision	By	Approved	Date
ORIGINAL		G.Parkinson	4/92
Add Metric		T. Stanton	03/03

SAN DIEGO REGIONAL STANDARD DRAWING

GUARD RAIL END ANCHORS
(BREAKAWAY)

RECOMMENDED BY THE SAN DIEGO REGIONAL STANDARDS COMMITTEE

T. Stanton 3/10/2003

Chairperson R.C.E. 19246 Date

DRAWING NUMBER M-37

This 2003 edition drawing is NOT in conformance with the latest Caltrans Standard Plans for Guardrails. Use Caltrans latest Standard Plans or seek Agency permission before using this drawing.

NOTE
See Standard Drawing M-37 for Breakaway End Anchor details.

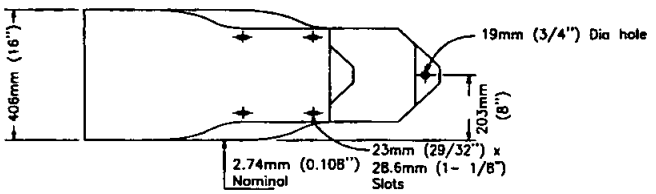

TERMINAL SECTION TYPE C-ELEVATION VIEW

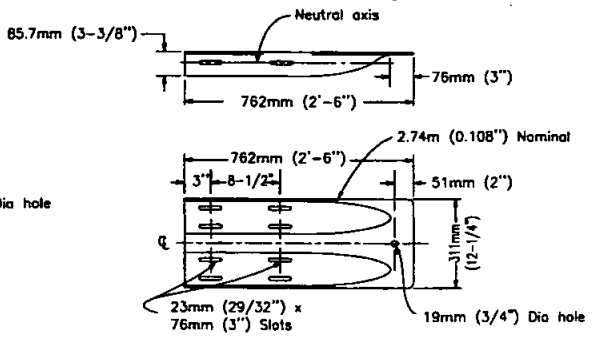

TERMINAL CONNECTOR FOR OPTIONAL DESIGN TERMINAL SECTION TYPE C

DETAIL C

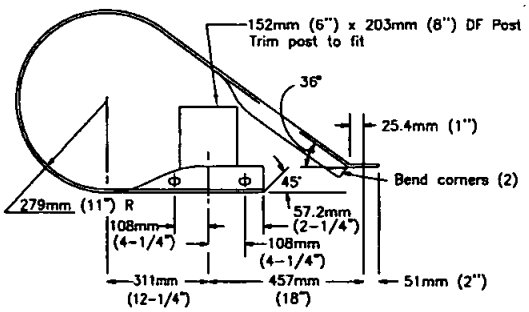

TERMINAL SECTION TYPE C

DETAIL A

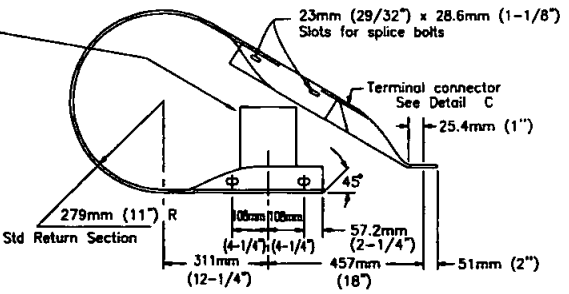

OPTIONAL DESIGN TERMINAL SECTION TYPE C

DETAIL B

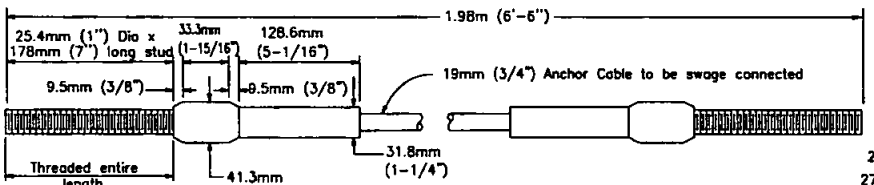

ANCHOR CABLE WITH SWAGED FITTING AND STUD

DETAIL E

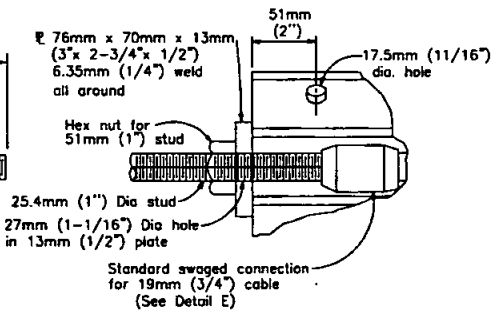

DETAIL D

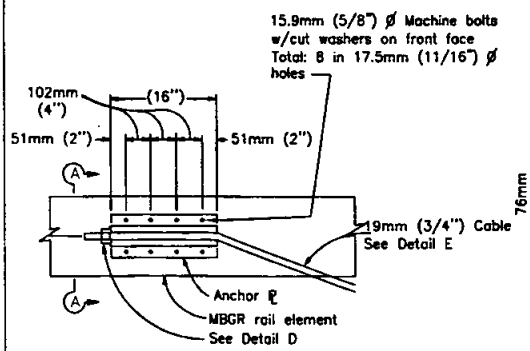

ANCHOR PLATE DETAIL

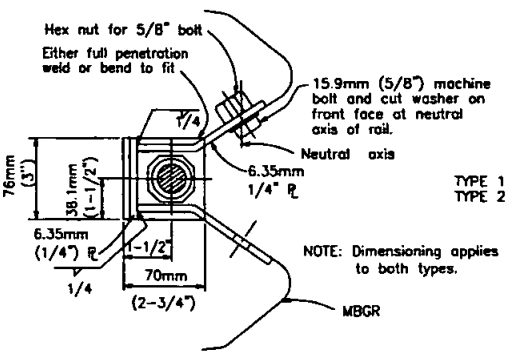

SECTION A-A
(ALTERNATIVE TYPE 1)

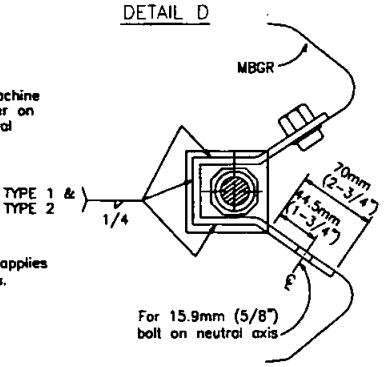

SECTION A-A
(ALTERNATIVE TYPE 2)

Revision	By	Approved	Date
ORIGINAL		G.Parkinson	4/92
Add Metric		T. Stanton	03/03

SAN DIEGO REGIONAL STANDARD DRAWING

GUARD RAIL END ANCHORS
(BREAKAWAY HARDWARE)

RECOMMENDED BY THE SAN DIEGO REGIONAL STANDARDS COMMITTEE

T. Stanton 3/10/2003
Chairperson R.C.E. 19246 Date

DRAWING NUMBER M-38

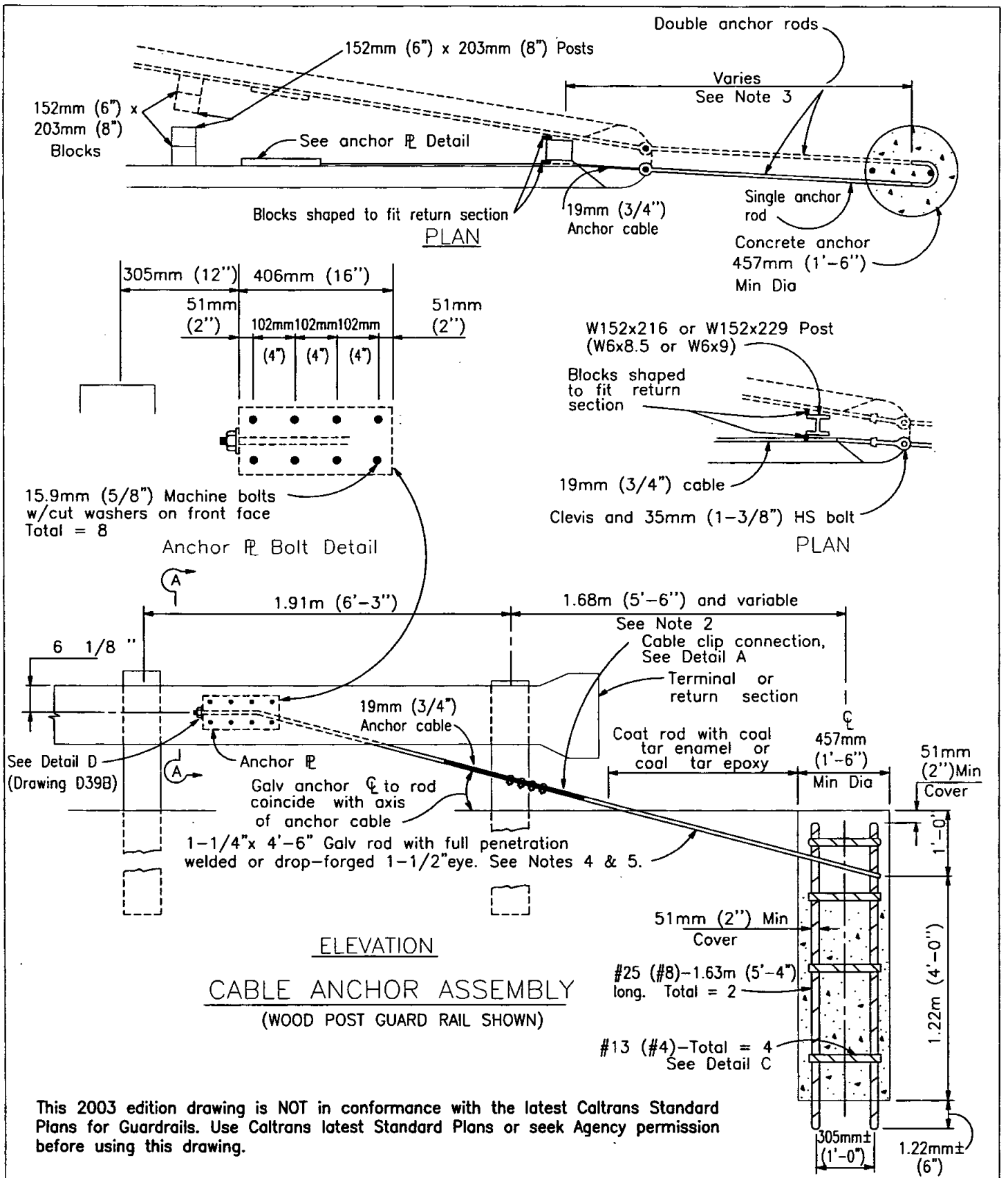

This 2003 edition drawing is NOT in conformance with the latest Caltrans Standard Plans for Guardrails. Use Caltrans latest Standard Plans or seek Agency permission before using this drawing.

Revision	By	Approved	Date
ORIGINAL		G.Parkinson	4/92
Add Metric		T. Stanton	03/03

SAN DIEGO REGIONAL STANDARD DRAWING

BARRIER AND GUARD RAIL END ANCHORS

RECOMMENDED BY THE SAN DIEGO REGIONAL STANDARDS COMMITTEE

T. Stanton 3/01/2003

Chairperson R.C.E. 19246 Date

DRAWING NUMBER M-39A

This 2003 edition drawing is NOT in conformance with the latest Caltrans Standard Plans for Guardrails. Use Caltrans latest Standard Plans or seek Agency permission before using this drawing.

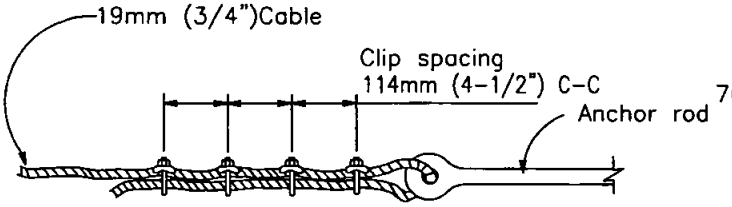

"U" bolts of clip on short end of cable only
"U" bolts tightened to 67.8 N-m (50 ft. lb.) torque

CABLE CLIP CONNECTION

DETAIL A

See Note 5

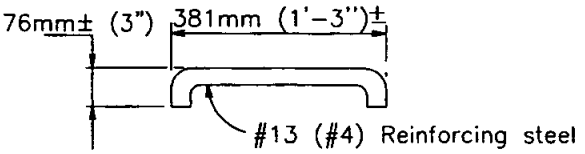

DETAIL C

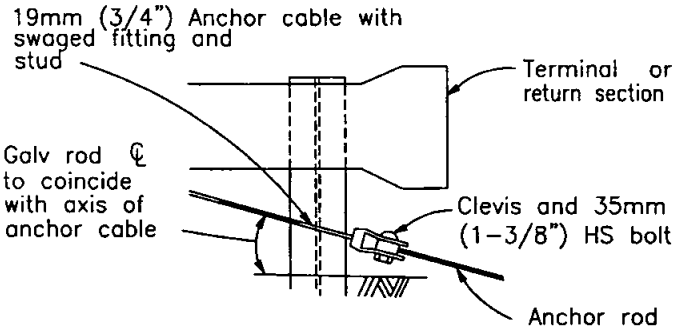

ELEVATION

CLEVIS AND BOLT CONNECTION

DETAIL B

(STEEL POST GUARD RAIL SHOWN)

See Note 5

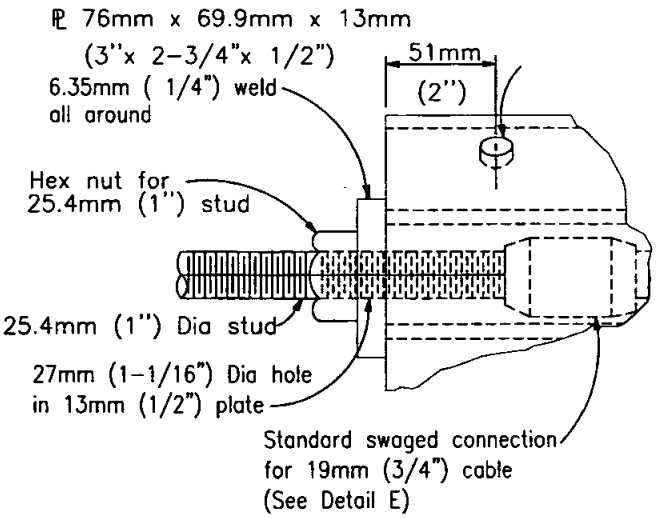

DETAIL D

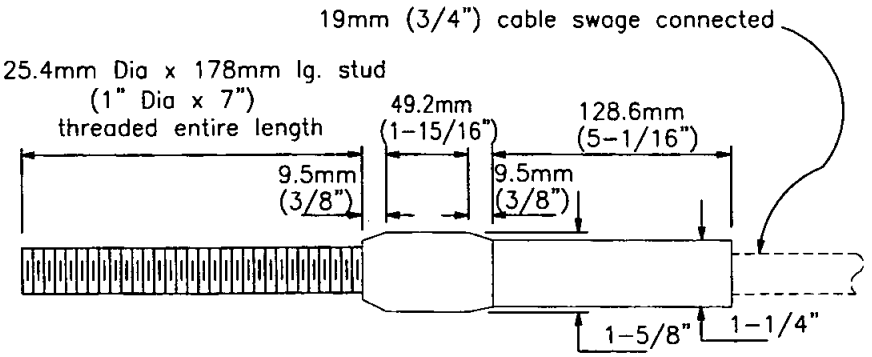

ANCHOR CABLE WITH SWAGED FITTING AND STUD

DETAIL E

Revision	By	Approved	Date
ORIGINAL		G.Parkinson	4/92
Add Metric		T. Stanton	03/03

SAN DIEGO REGIONAL STANDARD DRAWING

BARRIER AND GUARD RAIL END ANCHORS

RECOMMENDED BY THE SAN DIEGO REGIONAL STANDARDS COMMITTEE

T. Stanton 3/01/2003

Chairperson R.C.E. 19246 Date

DRAWING NUMBER M-39B

This 2003 edition drawing is NOT in conformance with the latest Caltrans Standard Plans for Guardrails. Use Caltrans latest Standard Plans or seek Agency permission before using this drawing.

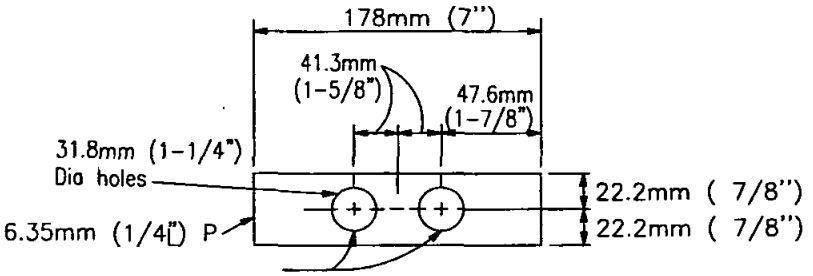

DETAIL F

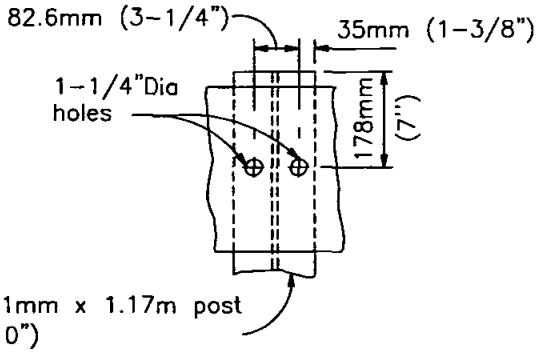

DETAIL G

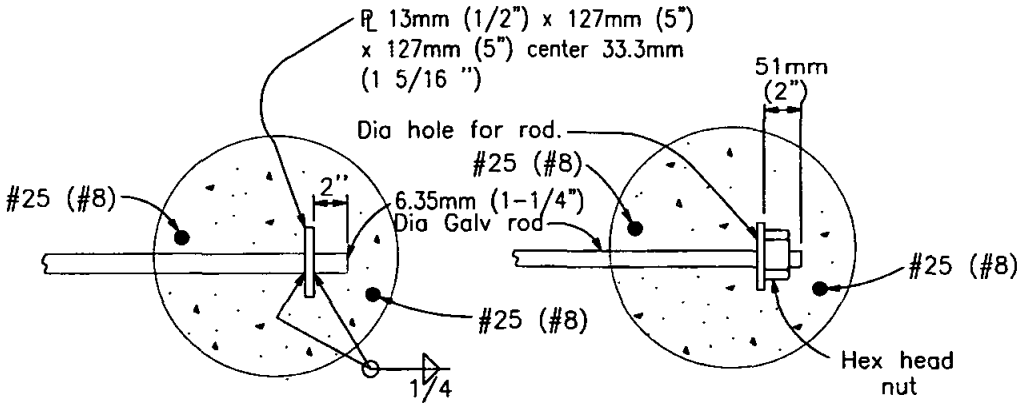

OPTIONAL SINGLE ANCHOR ROD END DETAILS

Not to be used for double anchors

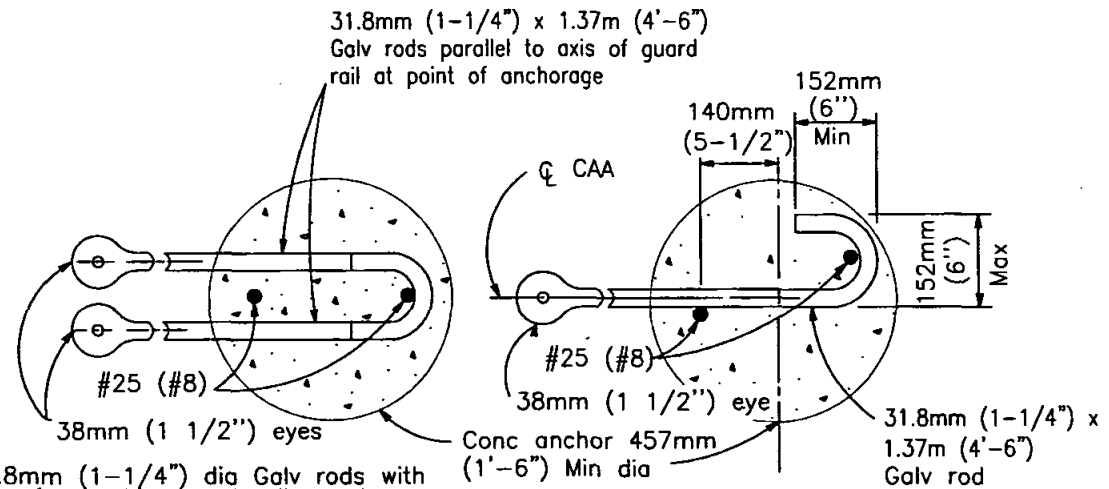

NOTE:
Use two 31.8mm (1-1/4") dia Galv rods with hook and eye for double guard rail anchor.

DOUBLE ANCHOR SINGLE ANCHOR

ANCHOR RODS

Revision	By	Approved	Date
ORIGINAL		G.Parkinson	4/92
Add Metric		T. Stanton	03/03

SAN DIEGO REGIONAL STANDARD DRAWING

BARRIER AND GUARD RAIL END ANCHORS

RECOMMENDED BY THE SAN DIEGO REGIONAL STANDARDS COMMITTEE

T. Stanton 3/10/2003

Chairperson R.C.E. 19246 Date

DRAWING NUMBER M-39C

This 2003 edition drawing is NOT in conformance with the latest Caltrans Standard Plans for Guardrails. Use Caltrans latest Standard Plans or seek Agency permission before using this drawing.

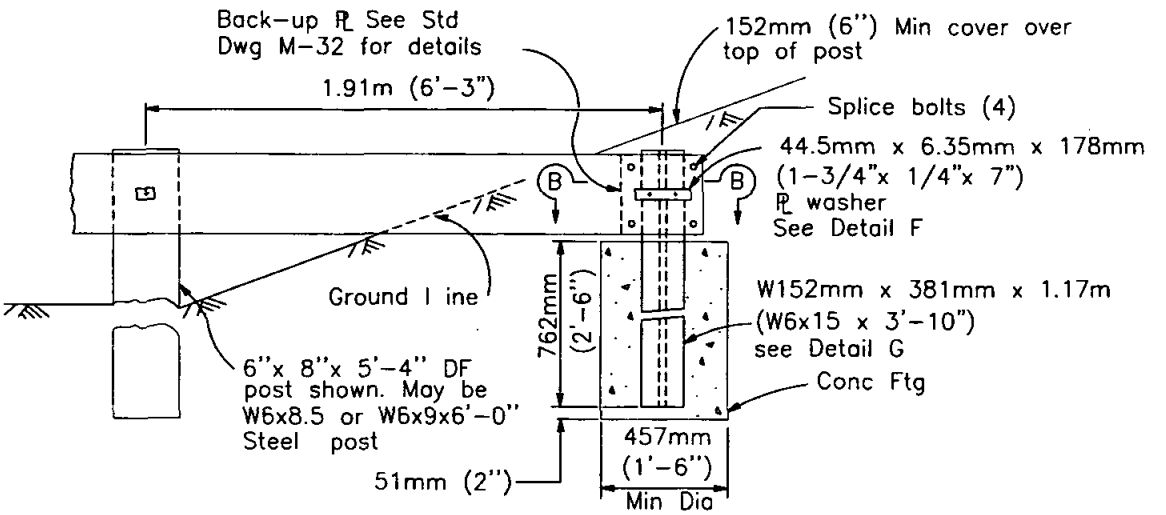

BURIED POST ANCHOR

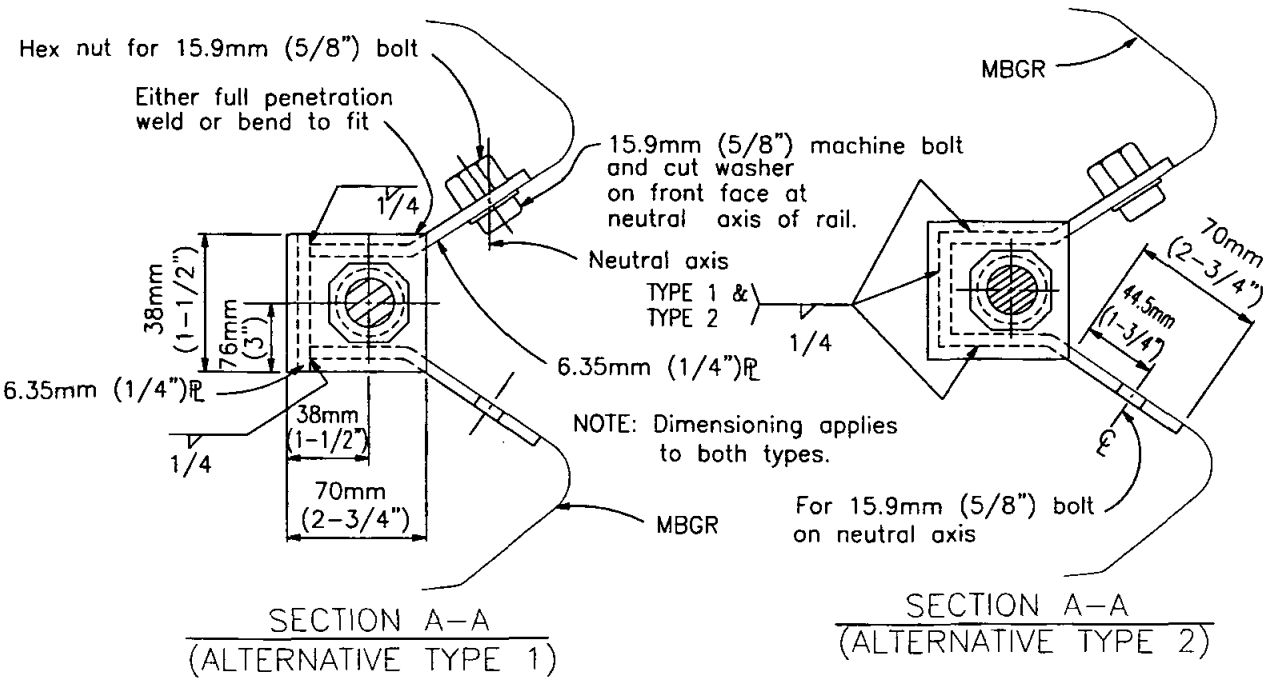

SECTION A-A
(ALTERNATIVE TYPE 1)

SECTION A-A
(ALTERNATIVE TYPE 2)

ANCHOR PLATE DETAILS

Revision	By	Approved	Date
ORIGINAL		G.Parkinson	4/92
Add Metric		T. Stanton	03/03

SAN DIEGO REGIONAL STANDARD DRAWING

BARRIER AND GUARD RAIL END ANCHORS

RECOMMENDED BY THE SAN DIEGO REGIONAL STANDARDS COMMITTEE

T. Stanton 3/01/2003

Chairperson R.C.E. 19246 Date

DRAWING NUMBER M-39D

This 2003 edition drawing is NOT in conformance with the latest Caltrans Standard Plans for Guardrails. Use Caltrans latest Standard Plans or seek Agency permission before using this drawing.

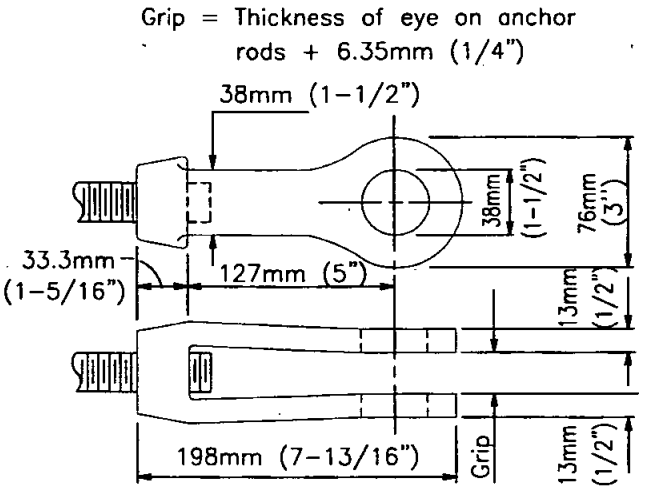

CLEVIS

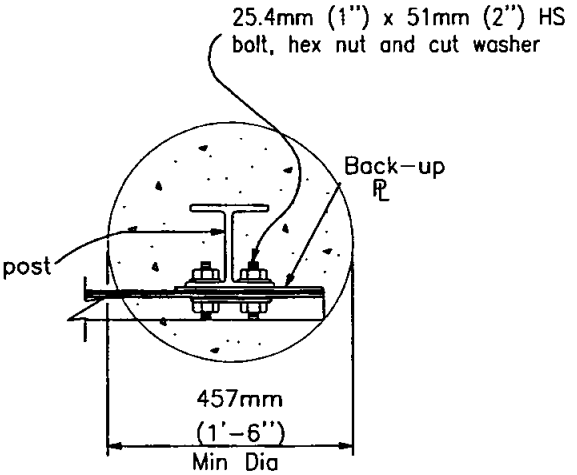

SECTION B-B

NOTES

1. For typical use of end anchors shown on this plan, see Standard Drawings M-34 and M-35.
2. Anchor cable to be parallel to guard rail for straight runs of rail. Anchor cable may have angle point at anchor plate if guard rail is curved.
3. 1.68m (5'-6") with terminal section. May be less than with return sections if separate rods connect to concrete anchor.
4. Anchor rod hooks to be in contact with anchor reinforcement when concrete is placed. Wire ties may be used to position anchor rods.
5. Cable clip connection (Detail A) or clevis and bolt connection (Detail B) to be used with wood post guard railing installation. For steel post guard railing installations, clevis and bolt connection (Detail B) is to be used. Other alternative for attaching cable to anchor rod must be approved by the engineer.

Revision	By	Approved	Date	SAN DIEGO REGIONAL STANDARD DRAWING	RECOMMENDED BY THE SAN DIEGO REGIONAL STANDARDS COMMITTEE
ORIGINAL		G.Parkinson	4/92		
Add Metric		T. Stanton	03/03	BARRIER AND GUARD RAIL END ANCHORS	T. Stanton 3/10/2003 Chairperson R.C.E. 19246 Date
					DRAWING NUMBER M-39E

This 2003 edition drawing is NOT in conformance with the latest Caltrans Standard Plans for Guardrails.
Use Caltrans latest Standard Plans or seek Agency permission before using this drawing.

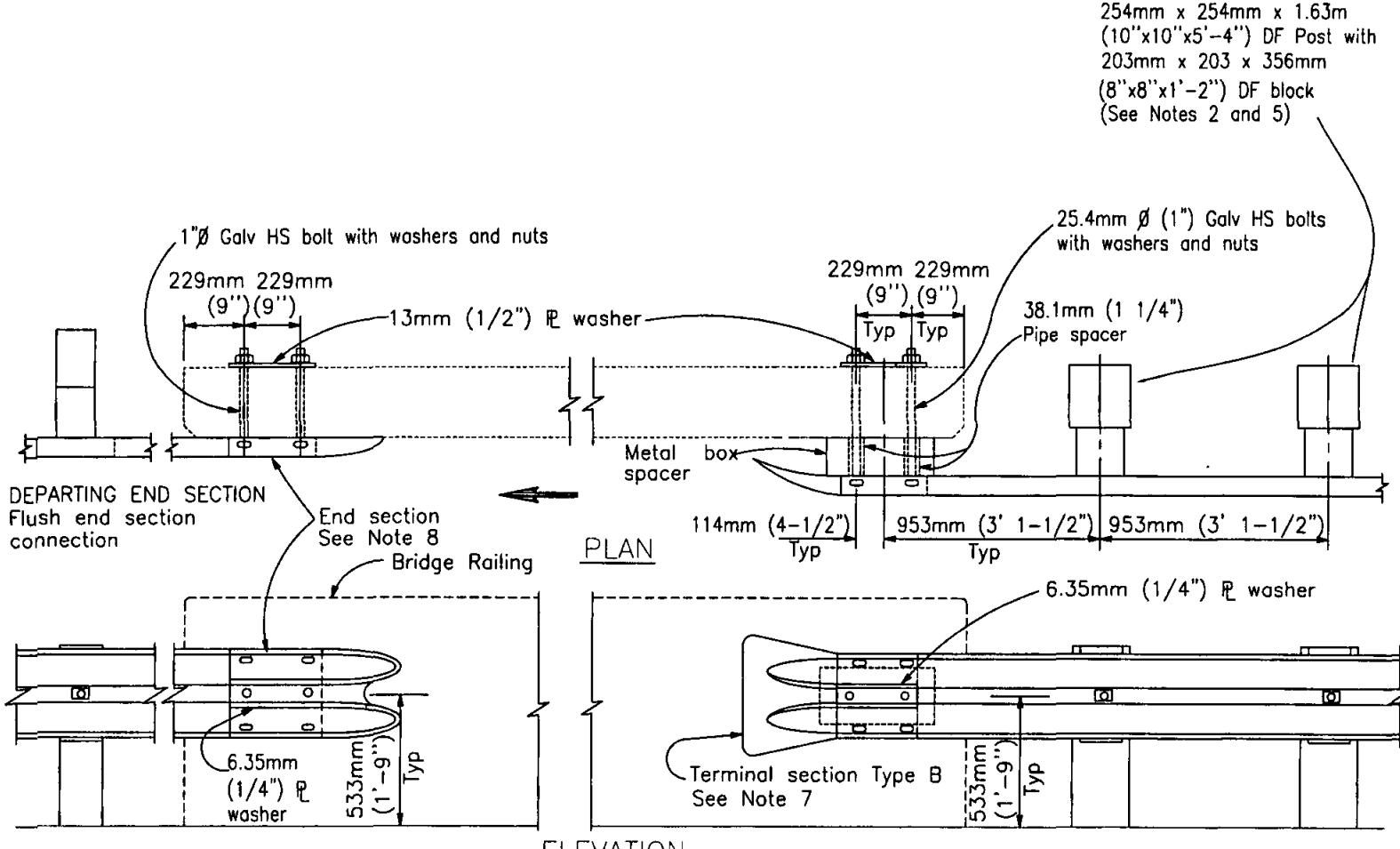

ELEVATION

GUARD RAIL CONNECTION TO BRIDGE RAILING

Revision	By	Approved	Date
ORIGINAL		G.Parkinson	4/92
Add Metric		T. Stanton	03/03

SAN DIEGO REGIONAL STANDARD DRAWING

GUARD RAIL CONNECTIONS
TO BRIDGE RAILS, RETAINING WALLS
AND ABUTMENTS

RECOMMENDED BY THE SAN DIEGO REGIONAL STANDARDS COMMITTEE

Chairperson R.C.E. 19246 Date 3/10/2003

DRAWING NUMBER M-40A

This 2003 edition drawing is NOT in conformance with the latest Caltrans Standard Plans for Guardrails. Use Caltrans latest Standard Plans or seek Agency permission before using this drawing.

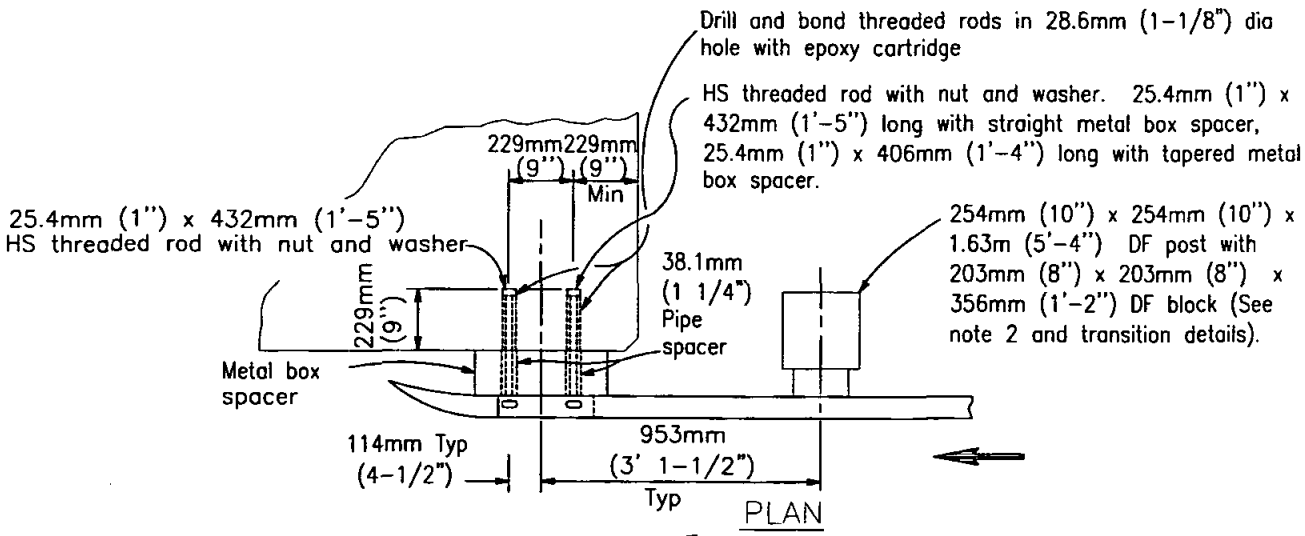

PLAN

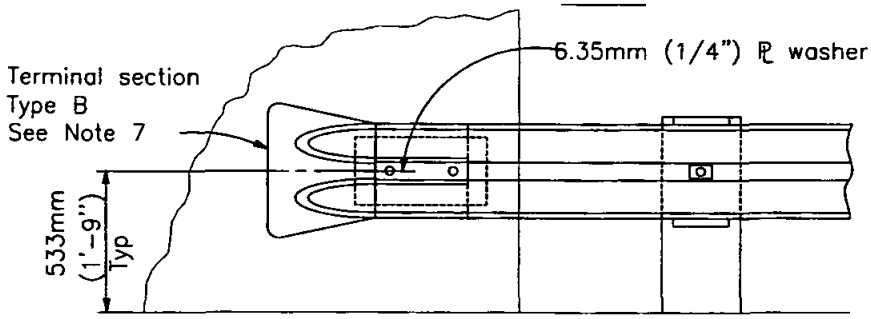

ELEVATION

GUARD RAIL CONNECTION TO WALL OR ABUTMENT FACE

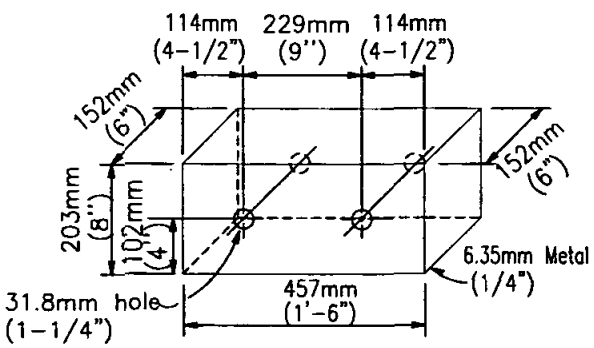

STRAIGHT METAL BOX SPACER

See Note 6

Use when approach guard rail is not tapered

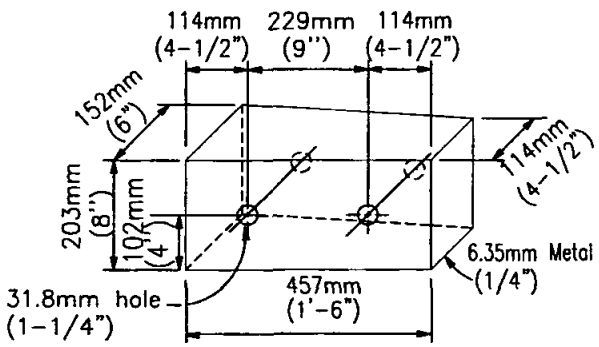

TAPERED METAL BOX SPACER

See Note 6

Use when approach guard rail is tapered

Revision	By	Approved	Date
ORIGINAL		G.Parkinson	4/92
Add Metric		T. Stanton	03/03

SAN DIEGO REGIONAL STANDARD DRAWING

GUARD RAIL CONNECTIONS TO BRIDGE RAILS, RETAINING WALLS AND ABUTMENTS

RECOMMENDED BY THE SAN DIEGO REGIONAL STANDARDS COMMITTEE

T. Stanton 3/10/2003

Chairperson R.C.E. 19246 Date

DRAWING NUMBER M-40B

This 2003 edition drawing is NOT in conformance with the latest Caltrans Standard Plans for Guardrails. Use Caltrans latest Standard Plans or seek Agency permission before using this drawing.

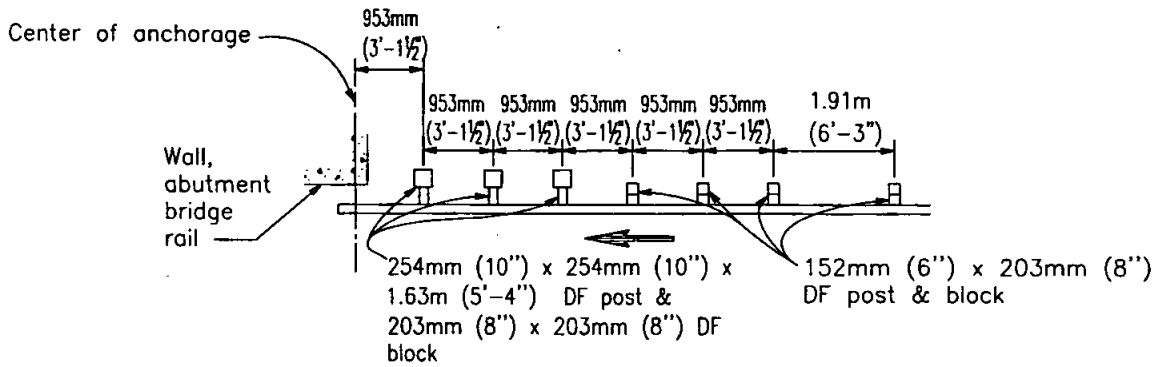

APPROACH RAILING TRANSITION
WOOD POSTS

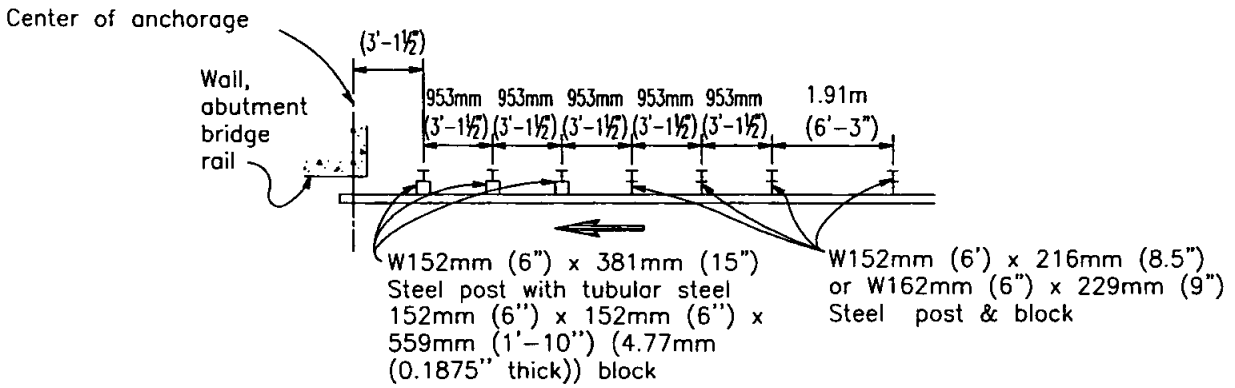

APPROACH RAILING TRANSITION
STEEL POSTS

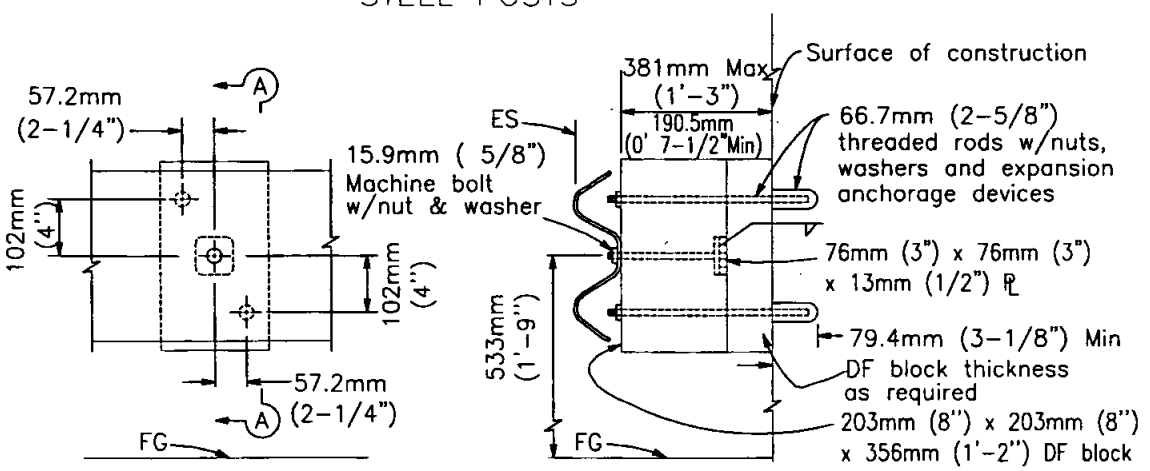

BLOCKOUT DETAIL-ELEVATION

SECTION A-A

See Notes 9 and 10

GUARD RAIL ANCHORAGE TO WALL OR ABUTMENT

Revision	By	Approved	Date
ORIGINAL		G.Parkinson	4/92
Add Metric		T. Stanton	03/03

SAN DIEGO REGIONAL STANDARD DRAWING

GUARD RAIL CONNECTIONS TO BRIDGE RAILS, RETAINING WALLS AND ABUTMENTS

RECOMMENDED BY THE SAN DIEGO REGIONAL STANDARDS COMMITTEE

T. Stanton 3/10/2003

Chairperson R.C.E. 19246 Date

DRAWING NUMBER M-40C

This 2003 edition drawing is NOT in conformance with the latest Caltrans Standard Plans for Guardrails. Use Caltrans latest Standard Plans or seek Agency permission before using this drawing.

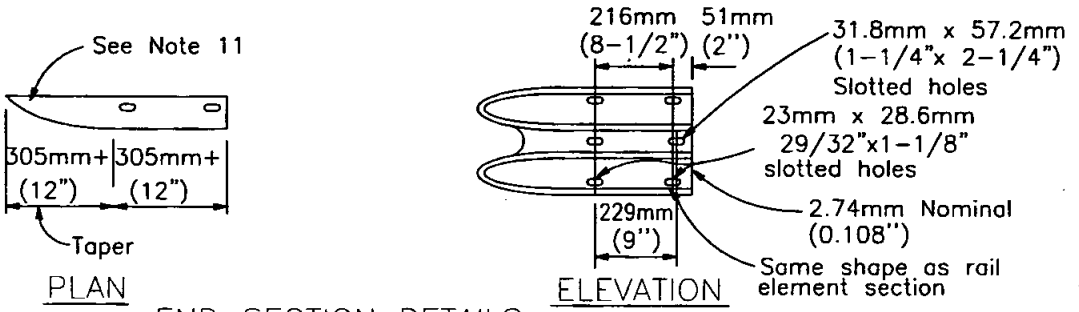

END SECTION DETAILS

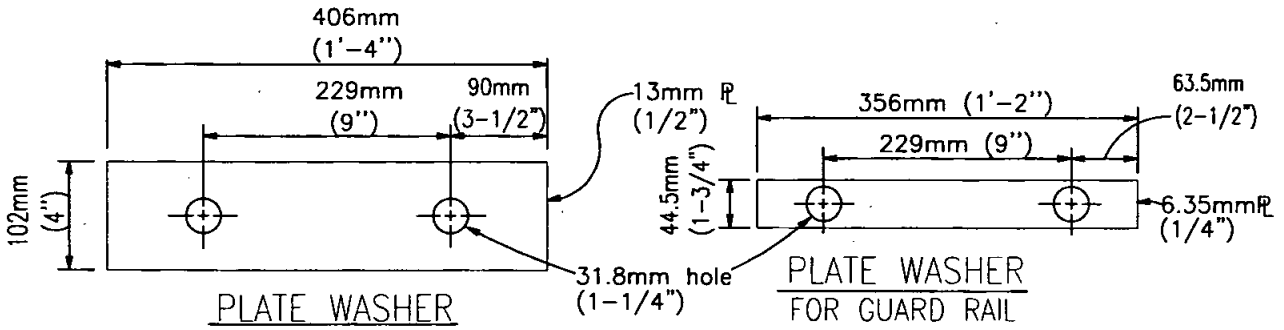

PLATE WASHER
FOR BACKSIDE OF BRIDGE RAILING

PLATE WASHER
FOR GUARD RAIL

NOTES

1. These connection details apply to bridge rails, abutments and retaining walls. For additional connection details for bridge railing, see the project plans.
2. Where 254mm (10") x 203mm (10") DF post and 203mm (8") x 203mm (8") DF blocks are shown, W152mm (6") x 381mm (15") steel posts and tubular steel 152mm (6") x 152mm (6") x 356mm (1'-2") (2.74mm (0.1875") thick) blocks may be specified where applicable.
3. Additional details of post, blocks and hardware are shown on Standard Drawings M-32 and M-33.
4. Direction of traffic indicated by ⟹
5. For approach railing details, see Type 1 flare on Standard Drawing M-34 and transition details on this plan.
6. When metal box spacer is installed, place 31.8mm (1-1/4") x 127mm (5") and 31.8mm (1-1/4") x 102mm (4") pipe spacers on 25.4mm (1") bolts passing through interior of tapered box spacer and 31.8mm (1-1/4") x 133.4mm (5-1/4") pipe spacers on 25.4mm (1") bolts passing through interior of straight box spacer.
7. Terminal sections will not be installed on trailing end of approach guard rail placed adjacent to one-way roadways. When terminal section is not instal led, use backup plate between rail element and metal box spacer. See Standard Drawing M-32 for backup plate details.
8. This type of connection may be used for both the approach and departing ends of structures on roadways 8.53m (28 feet) or less in width. Use timber shims without posts where rail to wall or abutment clearance is less than 381mm (15) inches.
9. Do Not attach rail to bridge columns.
10. Use separate posts as shown on Standard Drawing M-35.
11. End sections may be cut from Type B terminal section or fabricated.

Revision	By	Approved	Date
ORIGINAL		G.Parkinson	4/92
Add Metric		T. Stanton	03/03

SAN DIEGO REGIONAL STANDARD DRAWING

GUARD RAIL CONNECTIONS
TO BRIDGE RAILS, RETAINING WALLS
AND ABUTMENTS

RECOMMENDED BY THE SAN DIEGO REGIONAL STANDARDS COMMITTEE

T. Stanton 3/01/2003

Chairperson R.C.E. 19246 Date

DRAWING NUMBER M-40D

This 2003 edition drawing is NOT in conformance with the latest Caltrans Standard Plans for Guardrails. Use Caltrans latest Standard Plans or seek Agency permission before using this drawing.

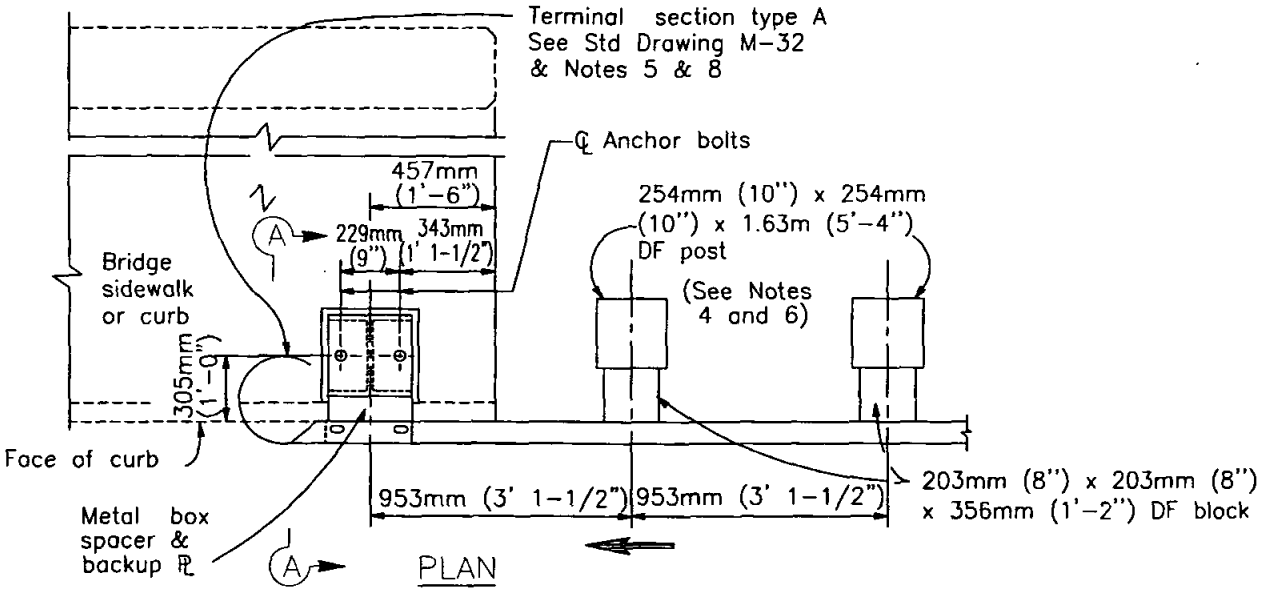

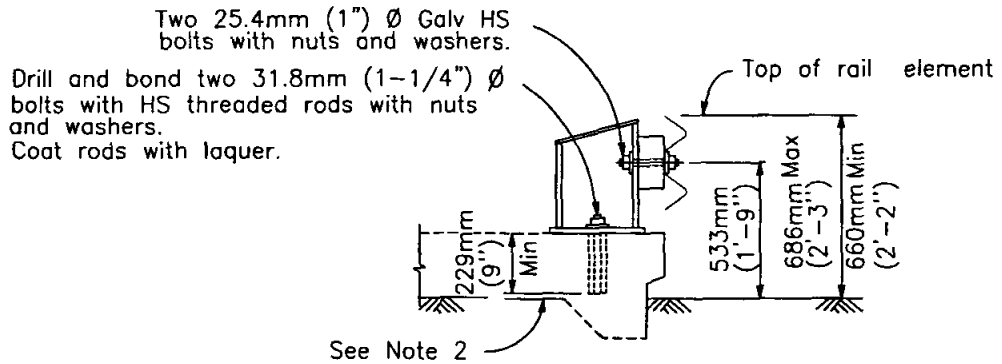

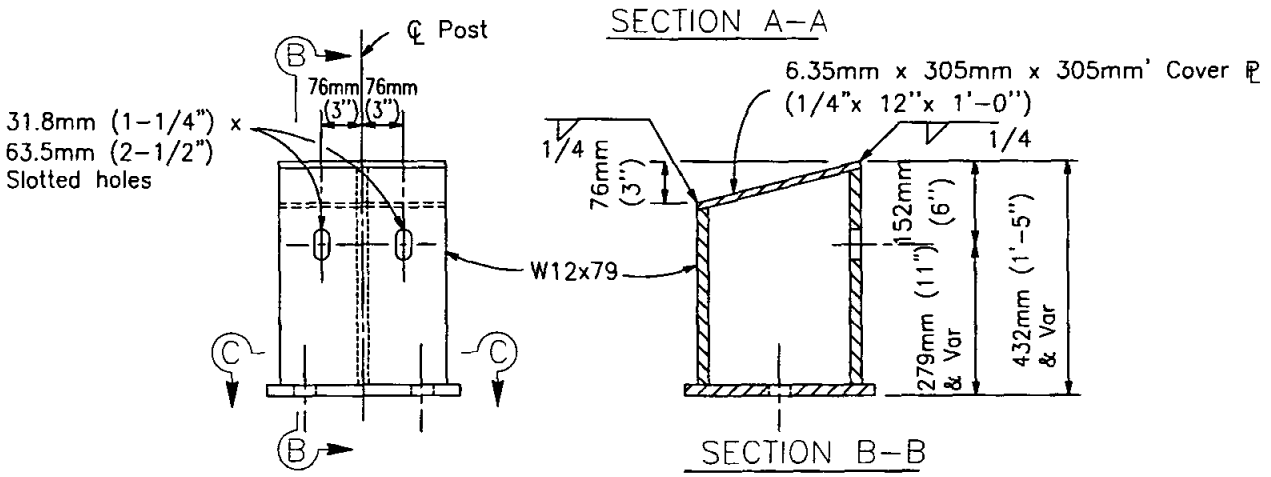

Revision	By	Approved	Date
ORIGINAL		G.Parkinson	4/92
Add Metric		T. Stanton	03/03

SAN DIEGO REGIONAL STANDARD DRAWING

GUARD RAIL CONNECTION TO BRIDGE, SIDEWALK AND CURBS

RECOMMENDED BY THE SAN DIEGO REGIONAL STANDARDS COMMITTEE

3/10/2003

Chairperson R.C.E. 19246 Date

DRAWING NUMBER M-41A

This 2003 edition drawing is NOT in conformance with the latest Caltrans Standard Plans for Guardrails. Use Caltrans latest Standard Plans or seek Agency permission before using this drawing.

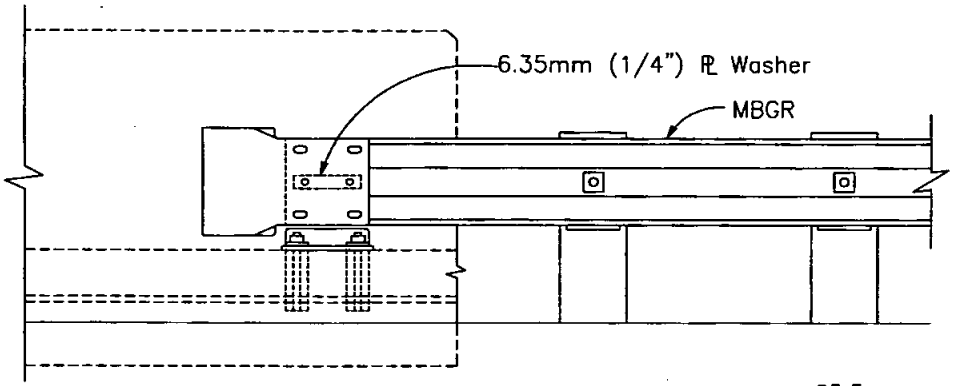

ELEVATION

CONNECTION DETAIL A

See Note 2

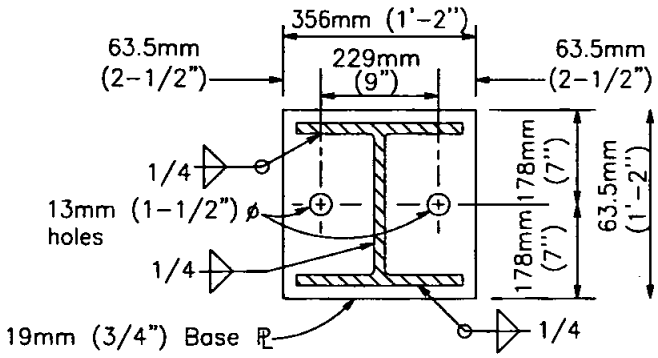

SECTION C-C

ANCHOR POST DETAILS

(FOR CONNECTION DETAIL A)

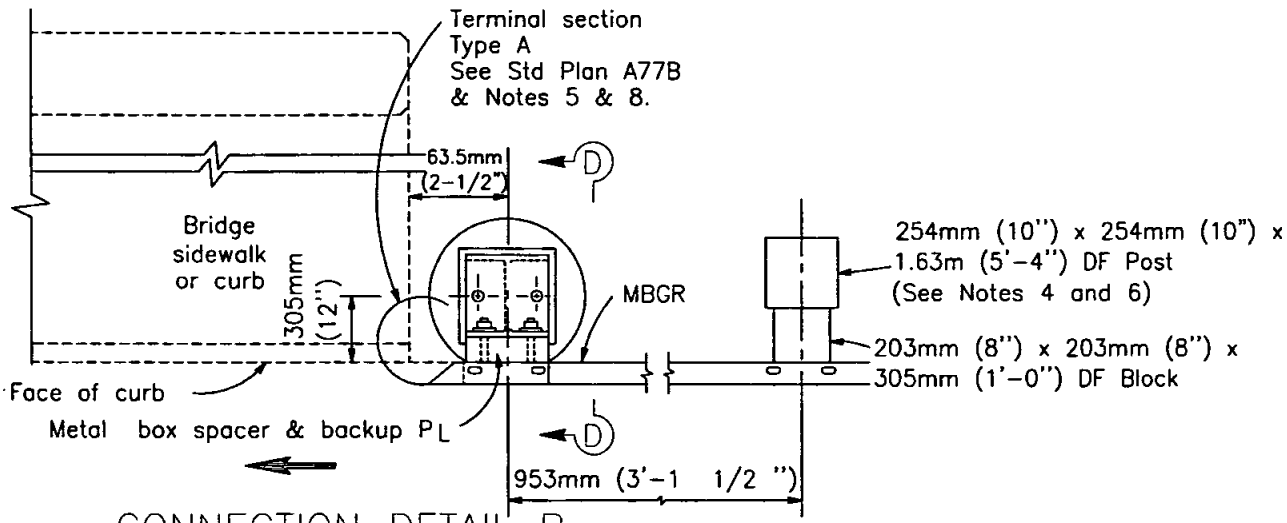

CONNECTION DETAIL B

PLAN

Revision	By	Approved	Date
ORIGINAL		G.Parkinson	4/92
Add Metric		T. Stanton	03/03

SAN DIEGO REGIONAL STANDARD DRAWING

GUARD RAIL CONNECTION TO BRIDGE, SIDEWALK AND CURBS

RECOMMENDED BY THE SAN DIEGO REGIONAL STANDARDS COMMITTEE

T. Stanton 3/10/2003

Chairperson R.C.E. 19246 Date

DRAWING NUMBER M-41B

This 2003 edition drawing is NOT in conformance with the latest Caltrans Standard Plans for Guardrails. Use Caltrans latest Standard Plans or seek Agency permission before using this drawing.

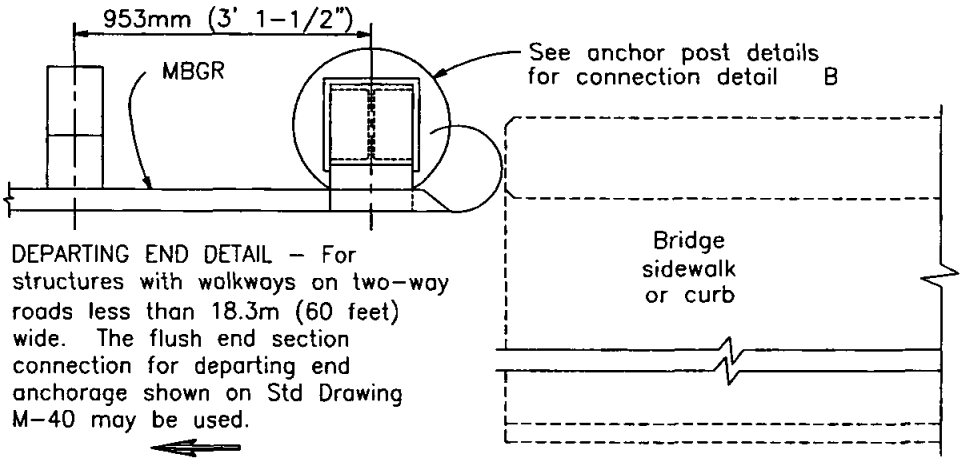

DEPARTING END DETAIL – For structures with walkways on two-way roads less than 18.3m (60 feet) wide. The flush end section connection for departing end anchorage shown on Std Drawing M-40 may be used.

CONNECTION DETAIL C

PLAN

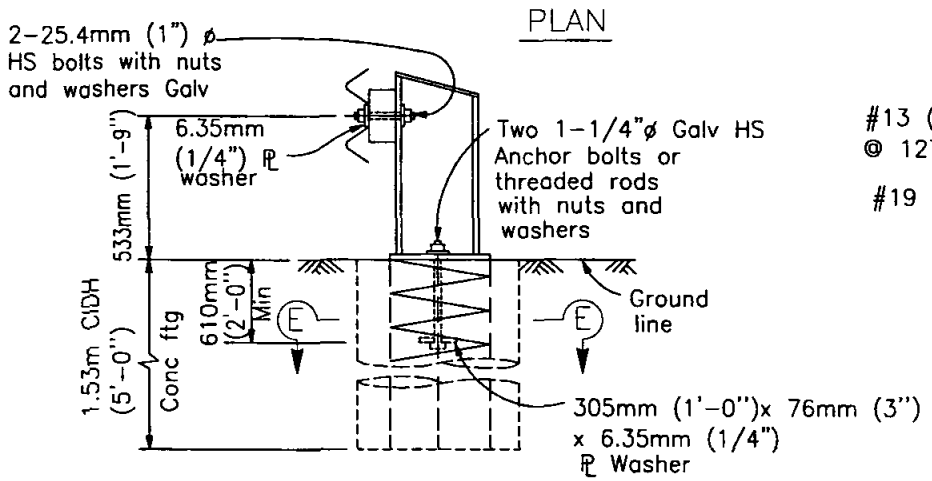

SECTION D-D

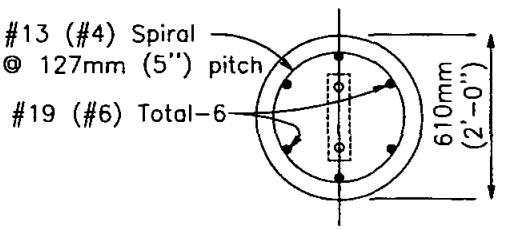

SECTION E-E

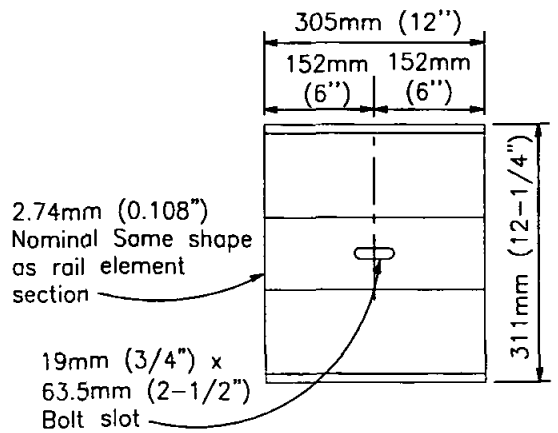

BACK-UP PLATE

For use between guard rail element and metal box spacer

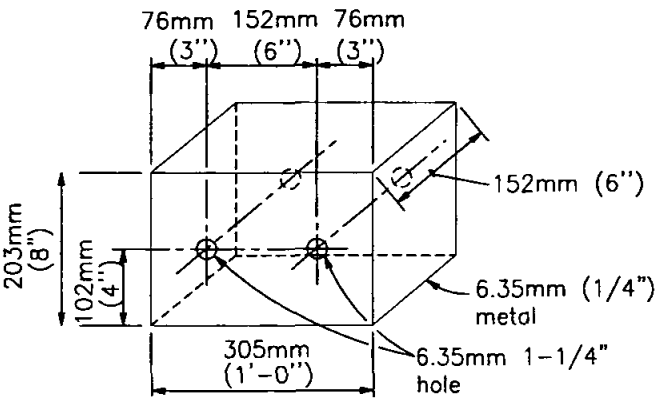

METAL BOX SPACER

Place 31.8mm (1-1/4") x 133.4mm (5-1/4") pipe spacers on 25.4mm (1") bolts passing through box interior

Revision	By	Approved	Date
ORIGINAL		G.Parkinson	4/92
Add Metric		T. Stanton	03/03

SAN DIEGO REGIONAL STANDARD DRAWING

GUARD RAIL CONNECTION TO BRIDGE, SIDEWALK AND CURBS

RECOMMENDED BY THE SAN DIEGO REGIONAL STANDARDS COMMITTEE

T. Stanton 3/01/2003

Chairperson R.C.E. 19246 Date

DRAWING NUMBER M-41C

This 2003 edition drawing is NOT in conformance with the latest Caltrans Standard Plans for Guardrails. Use Caltrans latest Standard Plans or seek Agency permission before using this drawing.

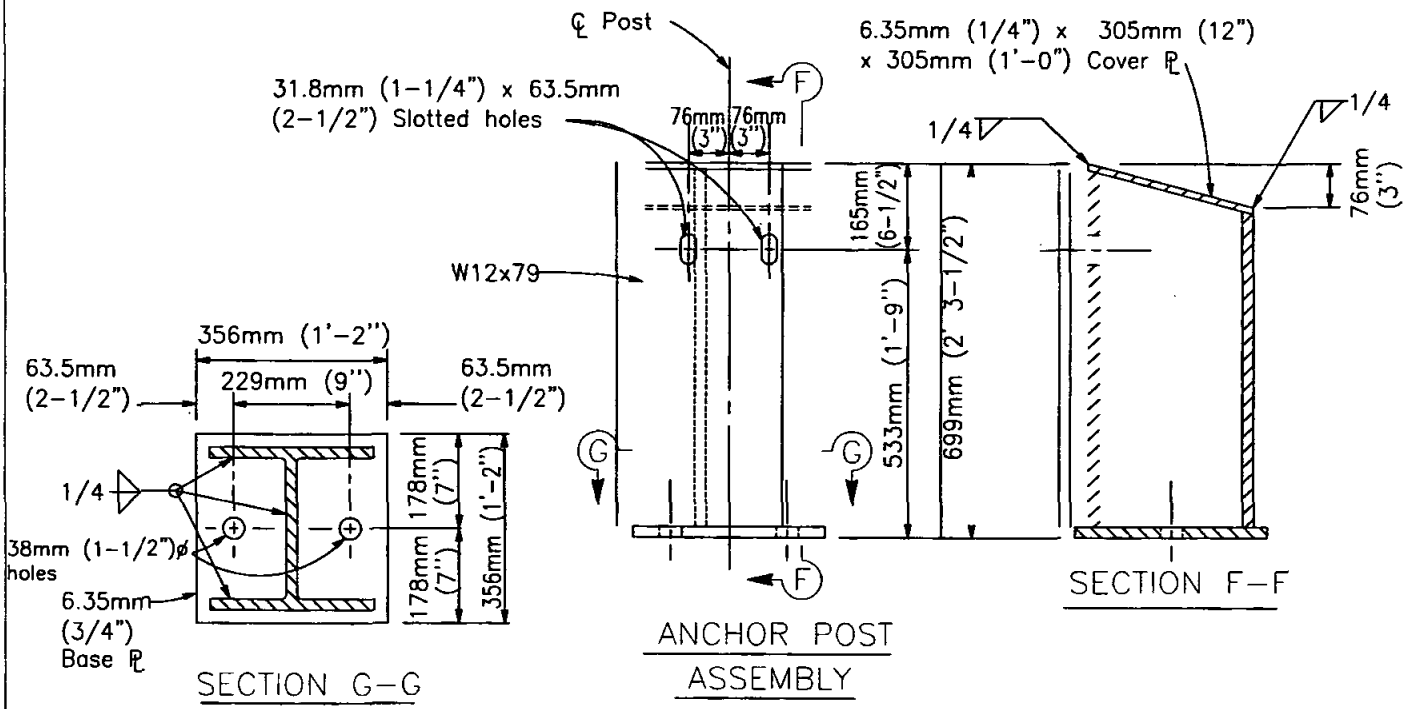

See Note 7

ANCHOR POST DETAILS
(FOR CONNECTION DETAIL B)

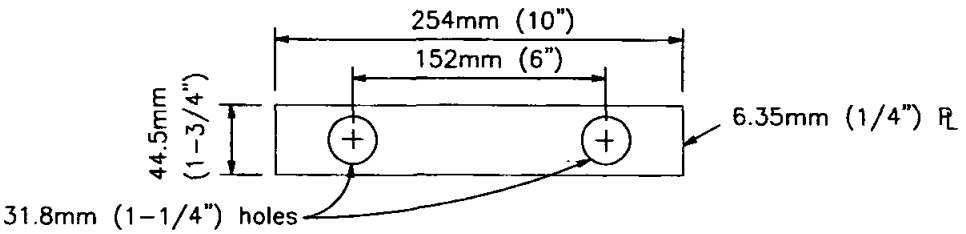

PLATE WASHER

NOTES

1. Connection Details A and B applies to the traffic approach end of bridges. For departure end of bridges, see Connection Detail C.
2. When curb or sidewalk depth is less than 229mm (9"), use Connection Detail B. Direction of traffic indicated by ⟶
3. For approach railing details, see Type 1 Flare on Standard Drawing M-34.
4. Terminal sections will not be installed on the trailing end of approach quard rail placed adjacent to one-way roadways.
5. Where 254mm (10") x 254mm (10") DF posts and 203mm (8") x 203mm (8") DF blocks are shown, W152mm (6") x 381mm (15") steel post and Tubular Steel 152mm (6") x 152mm (6") x 356mm (1'-2") (4.76mm (0.1875") thick) blocks may be specified where applicable.
6. Rail post assembly to be galvanized after fabrication.
7. Terminal section Type A to be used where pedestrian traffic is present.
8. For additional connection details for bridge barrier railing, see the project plans.

Revision	By	Approved	Date	SAN DIEGO REGIONAL STANDARD DRAWING	RECOMMENDED BY THE SAN DIEGO REGIONAL STANDARDS COMMITTEE
ORIGINAL		G.Parkinson	4/92		
Add Metric		T. Stanton	03/03	GUARD RAIL CONNECTION TO BRIDGE, SIDEWALK AND CURBS	3/01/2003 Chairperson R.C.E. 19246 Date
					DRAWING NUMBER M-41D

This 2003 edition drawing is NOT in conformance with the latest Caltrans Standard Plans for Guardrails. Use Caltrans latest Standard Plans or seek Agency permission before using this drawing.

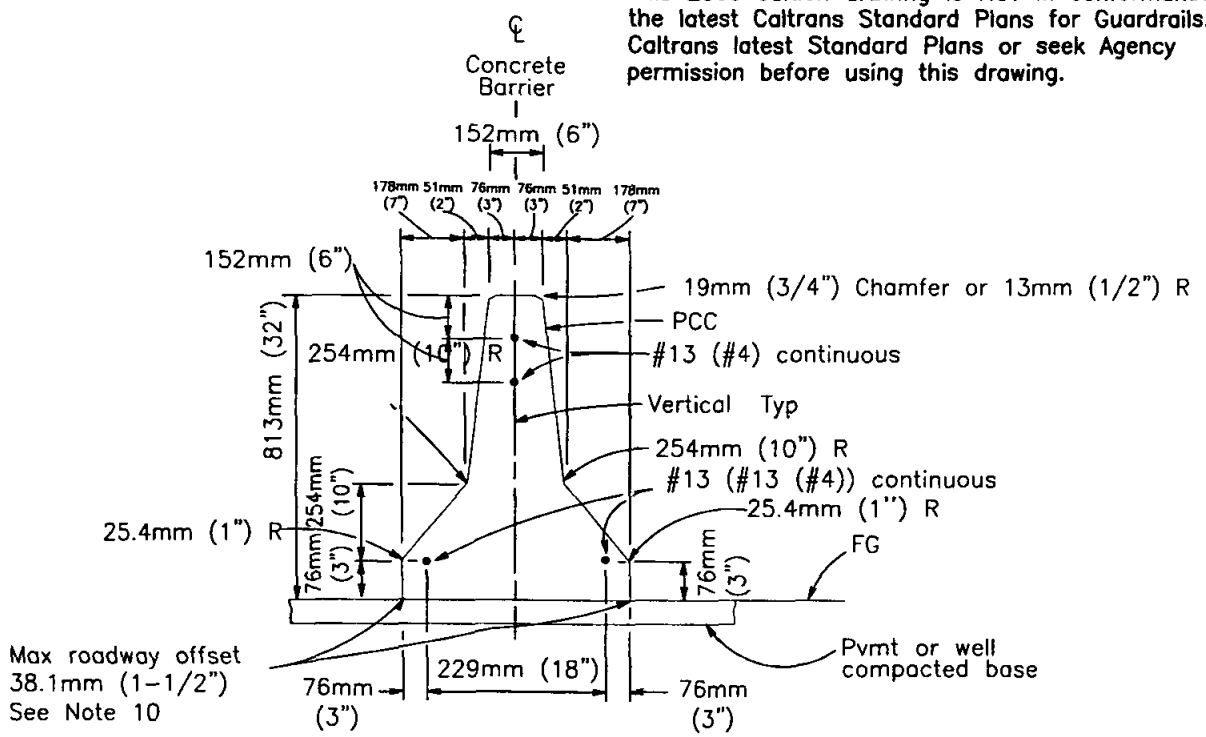

CONCRETE BARRIER
TYPE 50

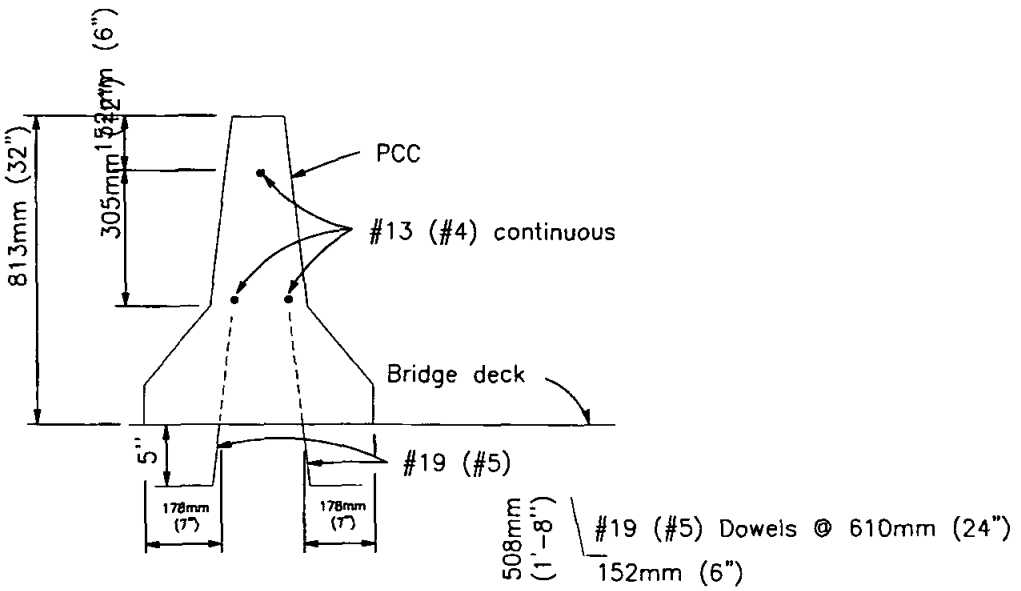

CONCRETE BARRIER
TYPE 50A

Details similar to Type 50 except as noted
See Note 7

Revision	By	Approved	Date	SAN DIEGO REGIONAL STANDARD DRAWING	RECOMMENDED BY THE SAN DIEGO REGIONAL STANDARDS COMMITTEE
ORIGINAL		G.Parkinson	4/92		
Add Metric		T. Stanton	03/03	CONCRETE BARRIER - TYPE 50	3/10/2003 Chairperson R.C.E. 19246 Date
					DRAWING NUMBER M-42A

This 2003 edition drawing is NOT in conformance with the latest Caltrans Standard Plans for Guardrails. Use Caltrans latest Standard Plans or seek Agency permission before using this drawing.

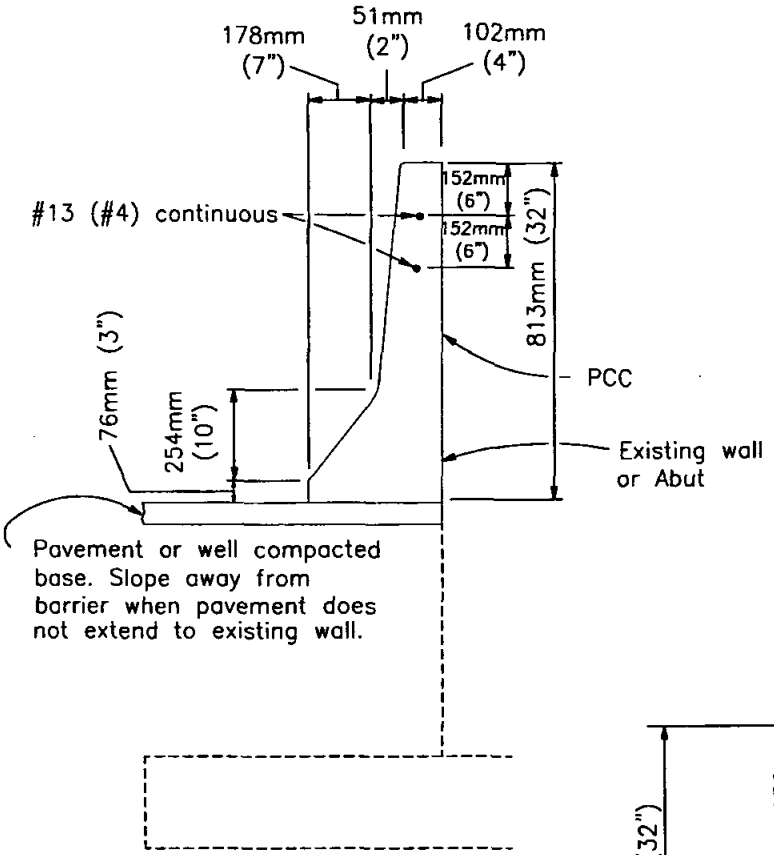

CONCRETE BARRIER

TYPE 50D

Details similar to Type 50 except as noted

Details similar to Type 50 except as noted
Barrier End Anchor when necessary

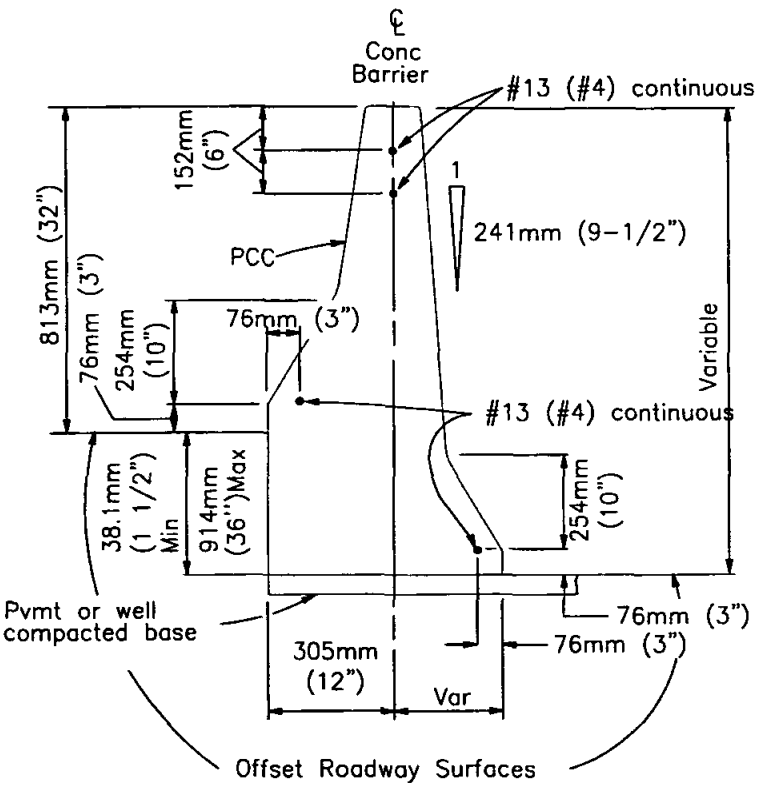

CONCRETE BARRIER

TYPE 50C

Revision	By	Approved	Date
ORIGINAL		G.Parkinson	4/92
Add Metric		T. Stanton	03/03

SAN DIEGO REGIONAL STANDARD DRAWING

CONCRETE BARRIER - TYPE 50

RECOMMENDED BY THE SAN DIEGO REGIONAL STANDARDS COMMITTEE

T. Stanton 3/10/2003

Chairperson R.C.E. 19246 Date

DRAWING NUMBER M-42B

This 2003 edition drawing is NOT in conformance with the latest Caltrans Standard Plans for Guardrails. Use Caltrans latest Standard Plans or seek Agency permission before using this drawing.

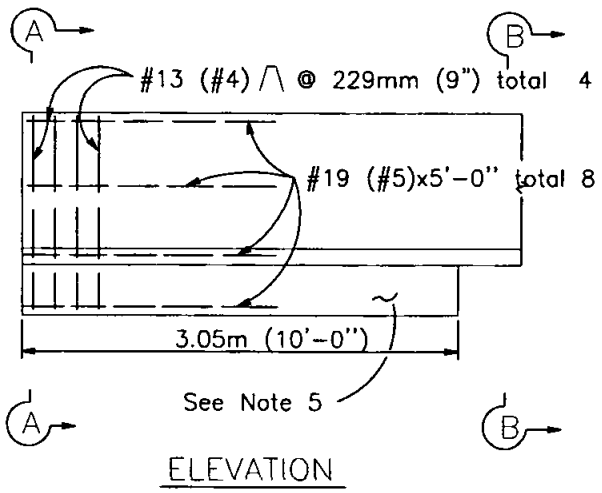

ELEVATION

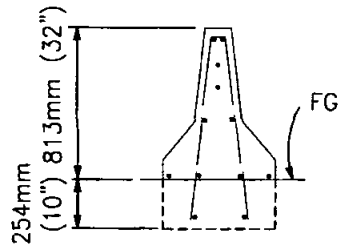

SECTION A–A

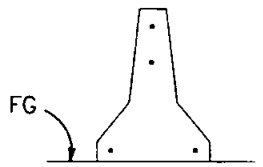

SECTION B–B

BARRIER END ANCHOR

See Note 9

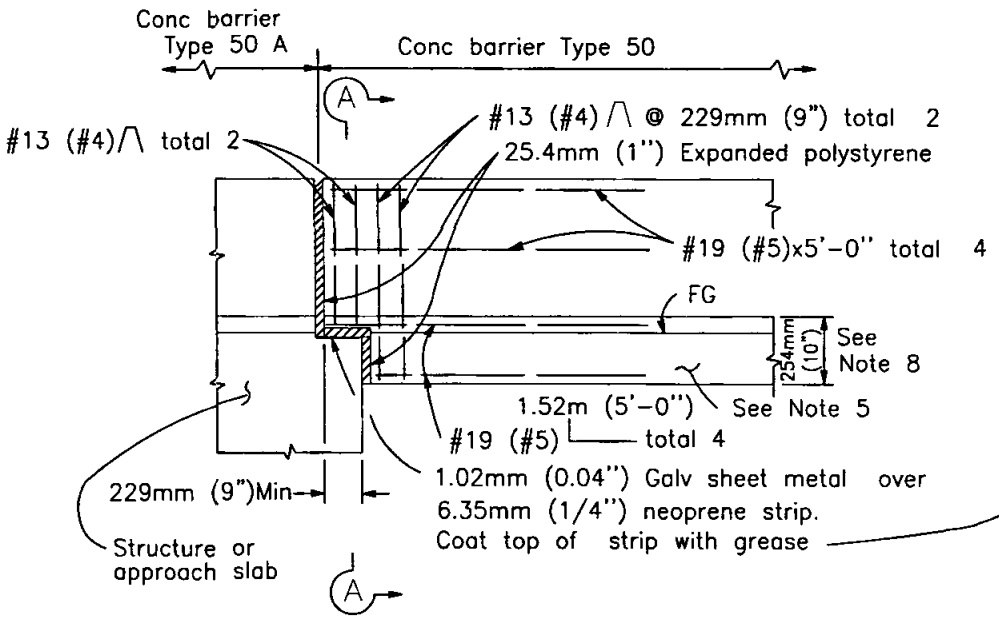

ELEVATION

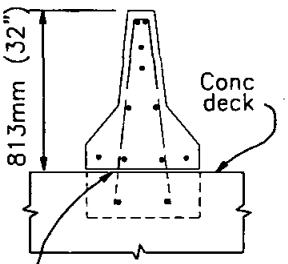

SECTION A–A

CONNECTION TO STRUCTURE

Revision	By	Approved	Date
ORIGINAL		G.Parkinson	4/92
Add Metric		T. Stanton	03/03

SAN DIEGO REGIONAL STANDARD DRAWING

CONCRETE BARRIER – TYPE 50

RECOMMENDED BY THE SAN DIEGO REGIONAL STANDARDS COMMITTEE

T. Stanton 3/01/2003

Chairperson R.C.E. 19246 Date

DRAWING NUMBER M-42C

This 2003 edition drawing is NOT in conformance with the latest Caltrans Standard Plans for Guardrails. Use Caltrans latest Standard Plans or seek Agency permission before using this drawing.

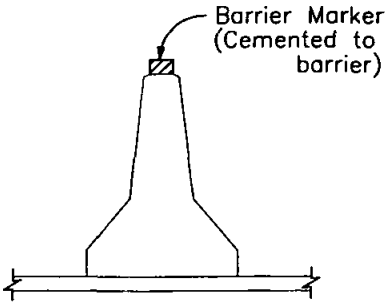

MEDIAN BARRIER DELINEATION

See Notes 11 and 12

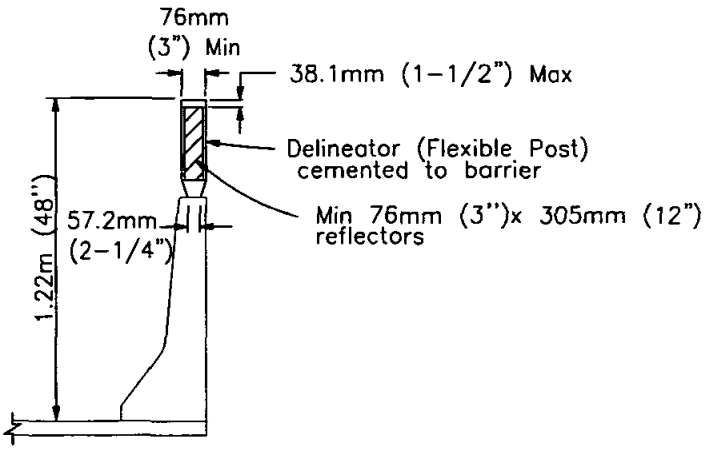

CONCRETE BARRIER DELINEATION

(For barriers not located in median)
See Note 11

NOTES

1. See Standard Drawing M-32 for concrete barrier transitions at bridge column and sign pedestals.
2. Opening into existing drainage inlets shall not extend above the 76mm (3-inch) vertical face at bottom of the barrier.
3. Where the barrier is added to the face of an existing concrete structure, match existing weep holes.
4. Contractor may submit alternative details for Engineer's approval.
5. Footing monolithic or doweled with 2-#25 (#8)x 203mm (0'-8") @ 610mm (24"). Required at barrier ends and at interruptions in barrier.
6. See Standard Drawing M-33 for glare screen details.
7. Expansion joints in concrete barrier shall be located at all deck, pavement and principal wall joints. Expansion joint filler material shall be the same size as joint or 13mm (1/2") minimum. 254mm
8. (10") Barrier footing extends 3.05m (10') back from structure.
9. For transition to TBB see Standard Drawing M-34.
10. Where roadway offset is greater than 38.1mm (1-1/2"), see Concrete Barrier Type 50C.
11. Barrier delineation to be used when required by the special provisions.
12. Spacing of barrier markers to match spacing of raised pavement markers on the adjacent median edgeline pavement delineation.

Revision	By	Approved	Date
ORIGINAL		G.Parkinson	4/92
Add Metric		T. Stanton	03/03

SAN DIEGO REGIONAL STANDARD DRAWING

CONCRETE BARRIER - TYPE 50

RECOMMENDED BY THE SAN DIEGO REGIONAL STANDARDS COMMITTEE

T. Stanton 3/10/2003

Chairperson R.C.E. 19246 Date

DRAWING NUMBER M-42D

This 2003 edition drawing is NOT in conformance with the latest Caltrans Standard Plans for Guardrails. Use Caltrans latest Standard Plans or seek Agency permission before using this drawing.

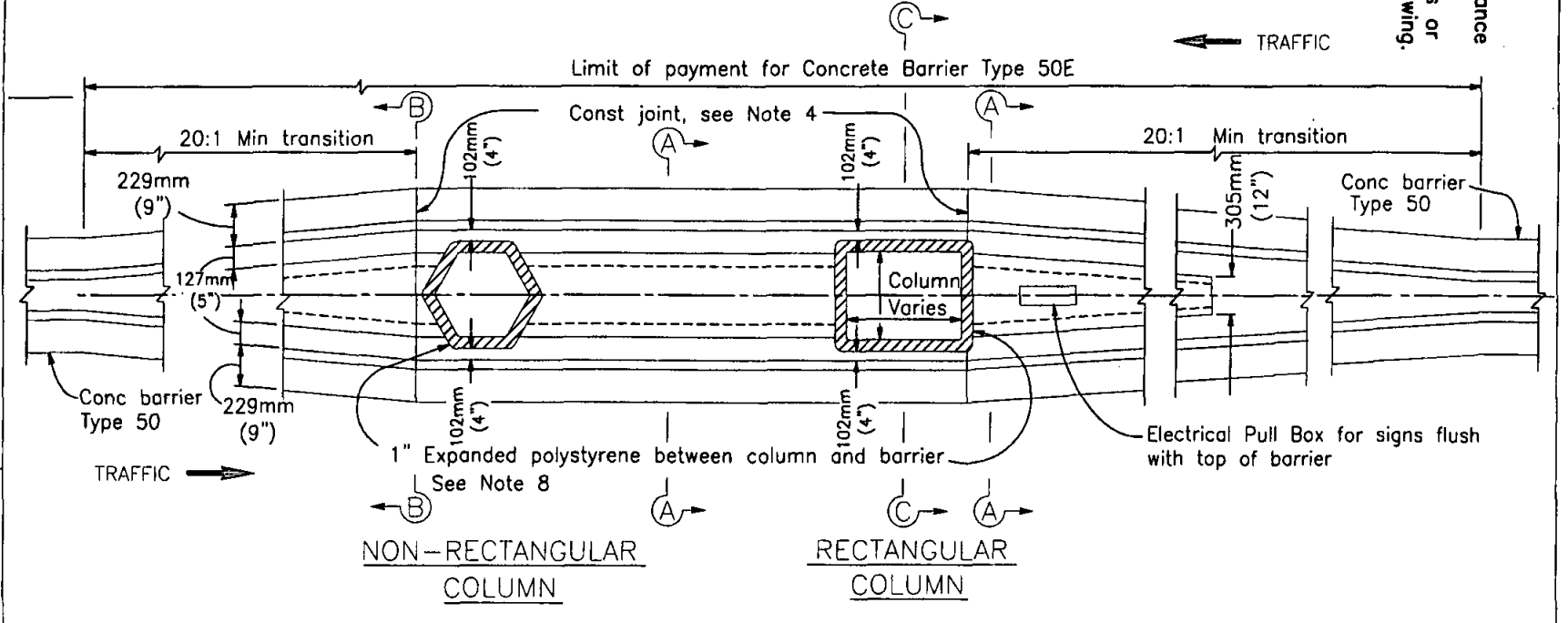

TRANSITION AT BRIDGE COLUMN

Revision	By	Approved	Date
ORIGINAL		G.Parkinson	4/92
Add Metric		T. Stanton	03/03

SAN DIEGO REGIONAL STANDARD DRAWING

CONCRETE BARRIER - TYPE 50E

RECOMMENDED BY THE SAN DIEGO REGIONAL STANDARDS COMMITTEE

Chairperson R.C.E. 19246 Date 3/10/2003

DRAWING NUMBER M-43A

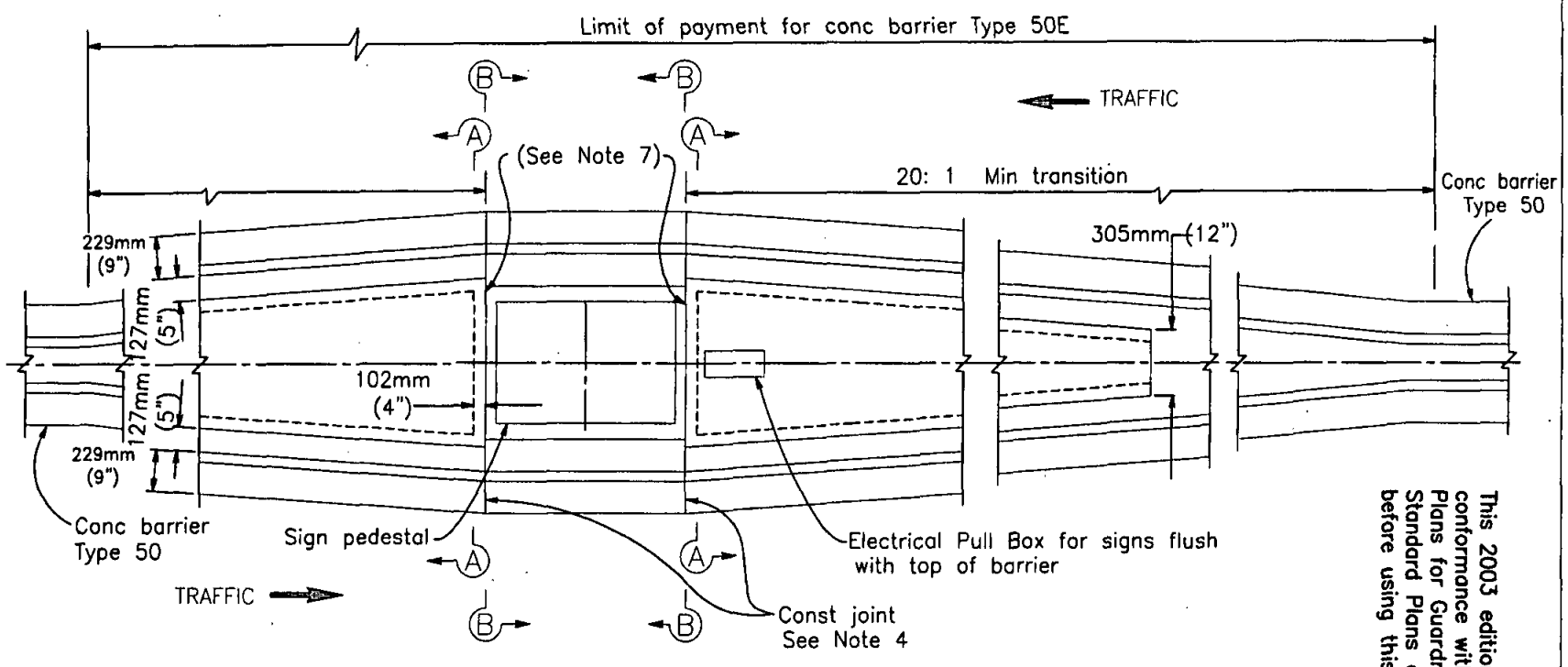

TRANSITION AT SIGN PEDESTAL

This 2003 edition drawing is NOT in conformance with the latest Caltrans Standard Plans for Guardrails. Use Caltrans latest Standard Plans or seek Agency permission before using this drawing.

Revision	By	Approved	Date
ORIGINAL		G.Parkinson	4/92
Add Metric		T. Stanton	03/03

SAN DIEGO REGIONAL STANDARD DRAWING

CONCRETE BARRIER - TYPE 50E

RECOMMENDED BY THE SAN DIEGO REGIONAL STANDARDS COMMITTEE

Chairperson R.C.E. 19246 Date 3/01/2003

DRAWING NUMBER M-43B

This 2003 edition drawing is NOT in conformance with the latest Caltrans Standard Plans for Guardrails. Use Caltrans latest Standard Plans or seek Agency permission before using this drawing.

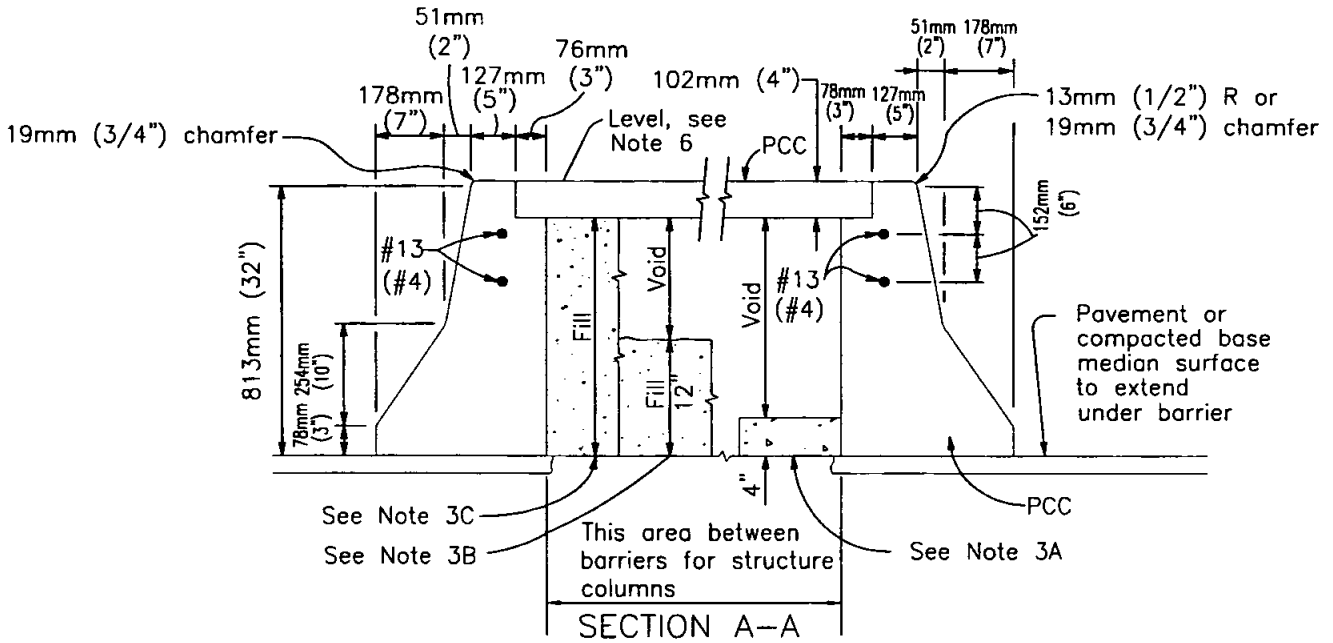

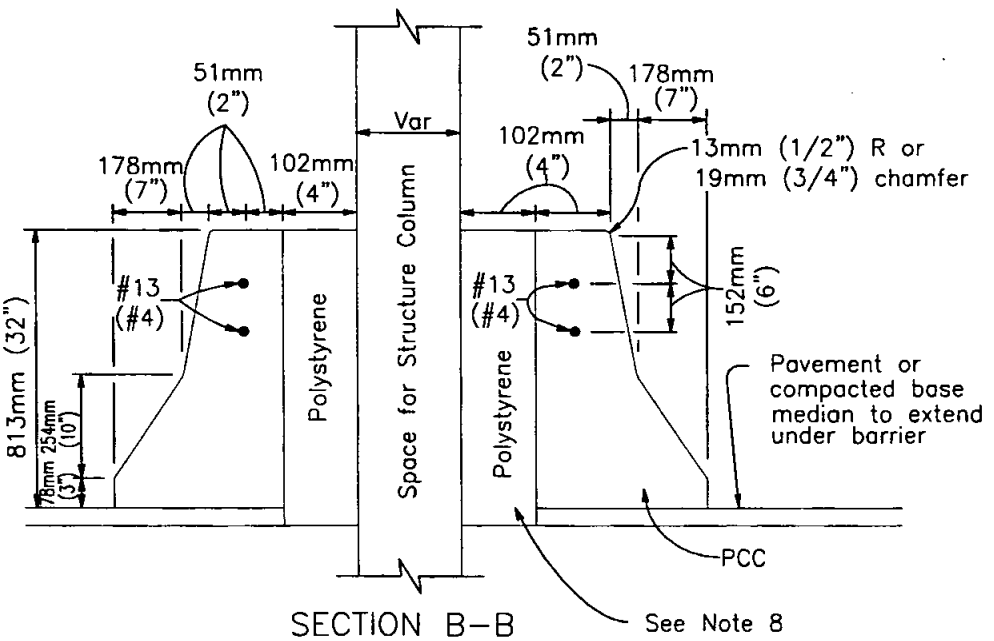

Revision	By	Approved	Date
ORIGINAL		G.Parkinson	4/92
Add Metric		T. Stanton	03/03

SAN DIEGO REGIONAL STANDARD DRAWING

CONCRETE BARRIER – TYPE 50E

RECOMMENDED BY THE SAN DIEGO REGIONAL STANDARDS COMMITTEE

3/01/2003

Chairperson R.C.E. 19246 Date

DRAWING NUMBER M–43C

This 2003 edition drawing is NOT in conformance with the latest Caltrans Standard Plans for Guardrails. Use Caltrans latest Standard Plans or seek Agency permission before using this drawing.

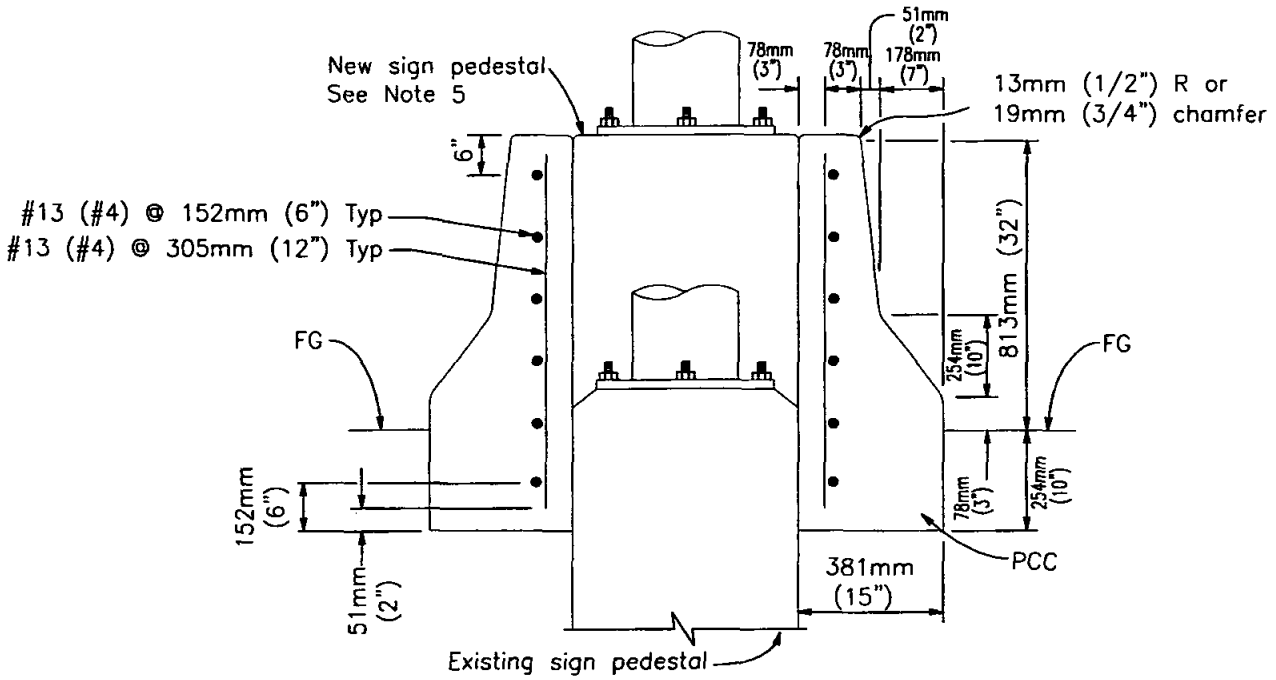

SECTION C–C

NOTES

1. See Standard Drawing M–31 for concrete barrier Type 50.
2. See Standard Drawing M–33 for concrete headlight glare screen details.
3. Contractor options for fill between barrier walls:
   A. Place 102mm (4") PCC at base between barrier walls.
   B. Place 305mm (12") of granular material at base between walls.
   C. Place granular material from base to bottom of 102mm (4") cap.
   Forming material for 102mm (4") cap may remain in place.
4. Reinforcing steel shall extend continuous through construction joints.
5. See "Overhead Sign" plans for sign pedestal elevations on new construction.
6. Adjust height of barrier on low side of offset or superelevated roadways to provide level grade across top of Type 50E barrier.
7. 102mm (4") PCC vertical walls at existing sign pedestals.
8. Enclose column with 4" expanded polystrene at locations where concrete or cement treated base encases the column.

Revision	By	Approved	Date
ORIGINAL		G.Parkinson	4/92
Add Metric		T. Stanton	03/03

SAN DIEGO REGIONAL STANDARD DRAWING

CONCRETE BARRIER – TYPE 50E

RECOMMENDED BY THE SAN DIEGO REGIONAL STANDARDS COMMITTEE

T. Stanton 3/10/2003

Chairperson R.C.E. 19246 Date

DRAWING NUMBER M–43D

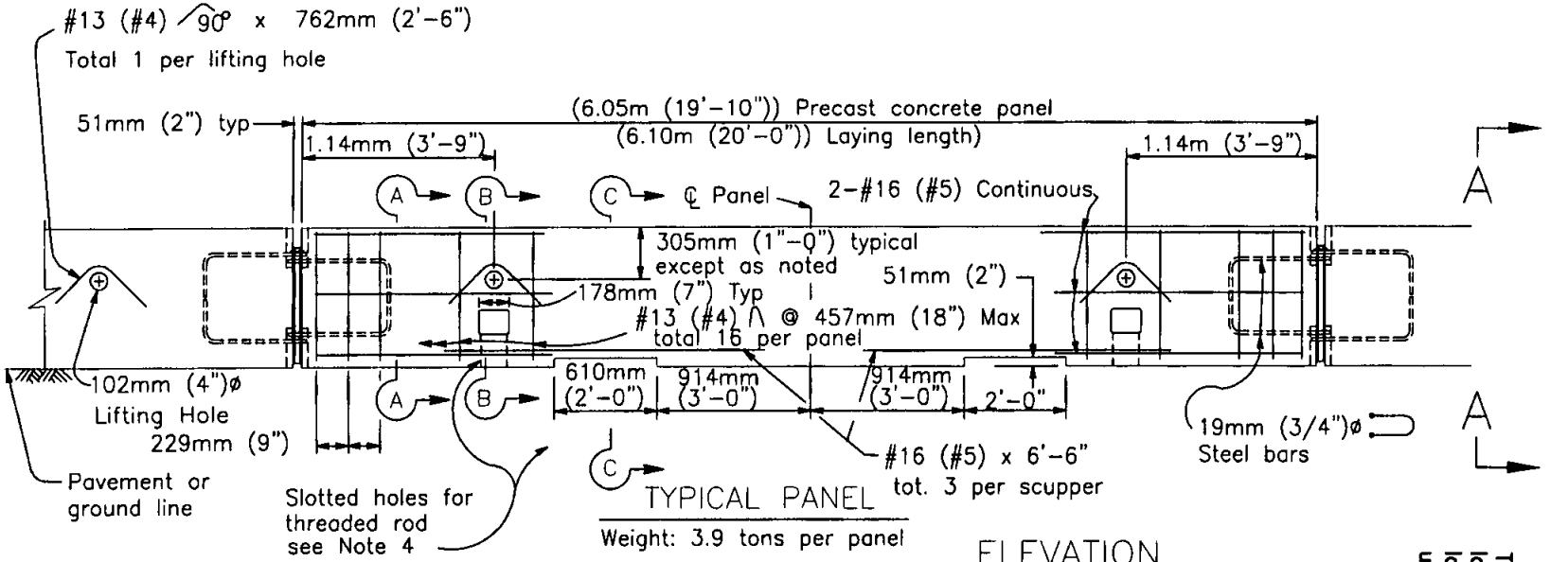

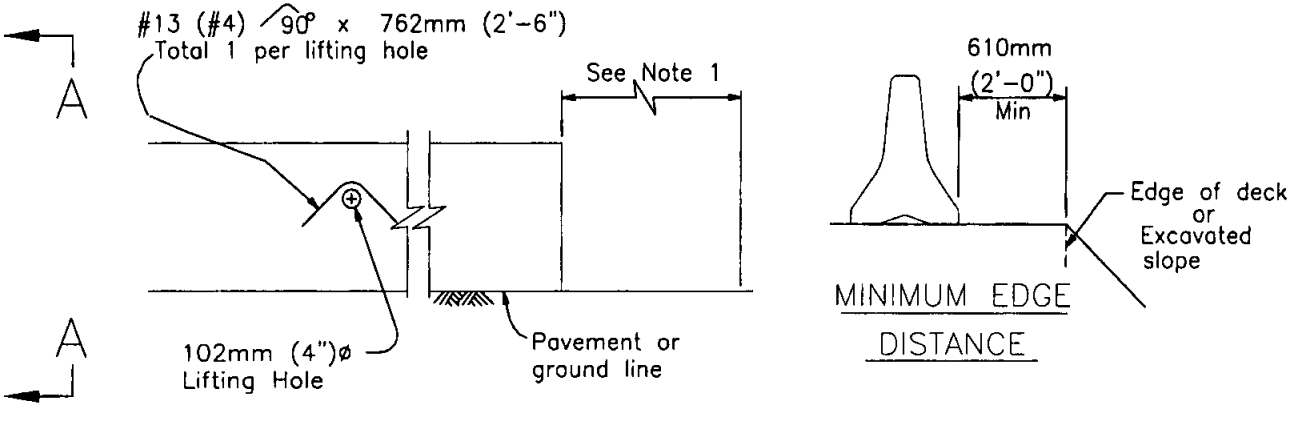

This 2003 edition drawing is NOT in conformance with the latest Caltrans Standard Plans for Guardrails. Use Caltrans latest Standard Plans or seek Agency permission before using this drawing.

Revision	By	Approved	Date
ORIGINAL		G.Parkinson	4/92
Add Metric		T. Stanton	03/03

SAN DIEGO REGIONAL STANDARD DRAWING

TEMPORARY RAILING - TYPE K

RECOMMENDED BY THE SAN DIEGO REGIONAL STANDARDS COMMITTEE

Chairperson R.C.E. 19246 Date 3/10/2003

DRAWING NUMBER M-44A

This 2003 edition drawing is NOT in conformance with the latest Caltrans Standard Plans for Guardrails. Use Caltrans latest Standard Plans or seek Agency permission before using this drawing.

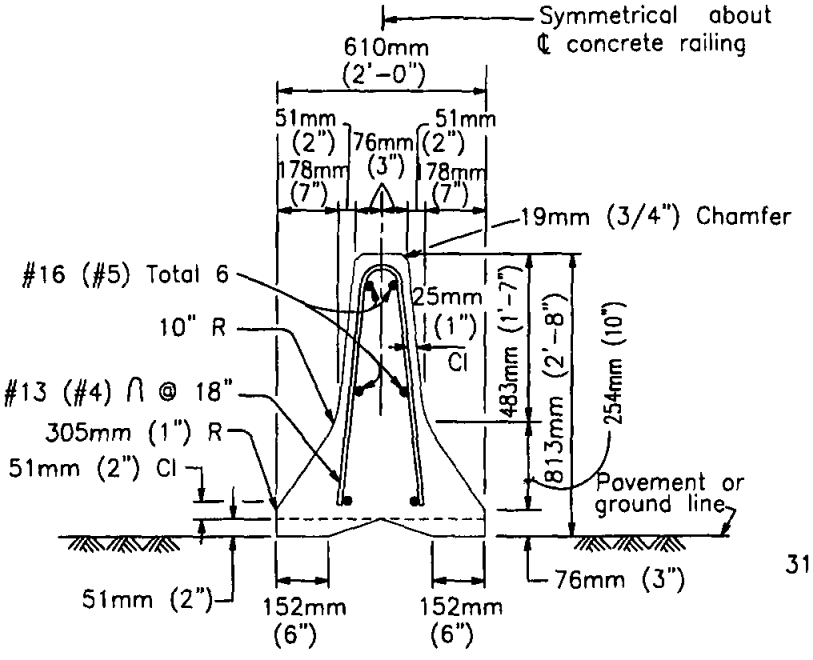

SECTION A-A

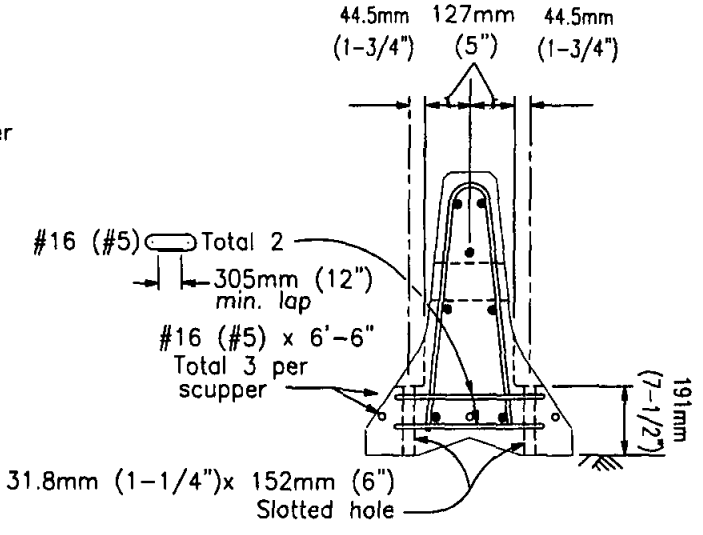

SECTION B-B

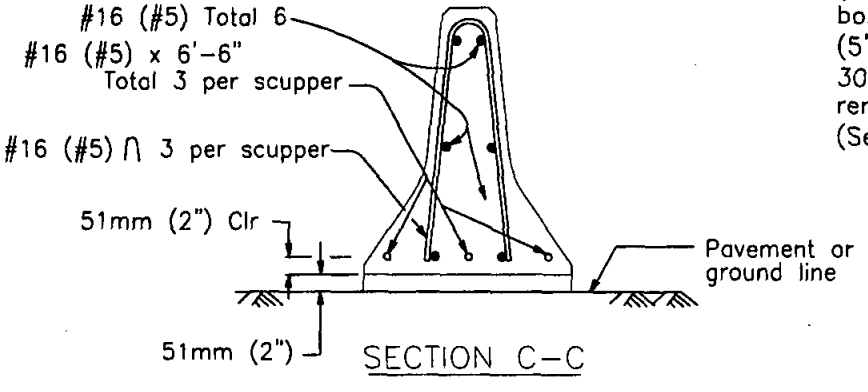

SECTION C-C

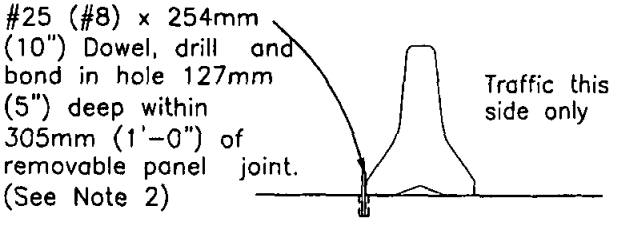

SECTION G-G *

* Section G-G is for PCC pavement. Alternative detail, 25mm (1")ø pins 610mm (2'-0") long driven in AC or firm soil permitted, minimum 457mm (1'-6") deep.

Revision	By	Approved	Date
ORIGINAL		G.Parkinson	4/92
Add Metric		T. Stanton	03/03

SAN DIEGO REGIONAL STANDARD DRAWING

TEMPORARY RAILING - TYPE K

RECOMMENDED BY THE SAN DIEGO REGIONAL STANDARDS COMMITTEE

Chairperson R.C.E. 19246 Date 3/10/2003

DRAWING NUMBER M-44B

This 2003 edition drawing is NOT in conformance with the latest Caltrans Standard Plans for Guardrails.
Use Caltrans latest Standard Plans or seek Agency permission before using this drawing.

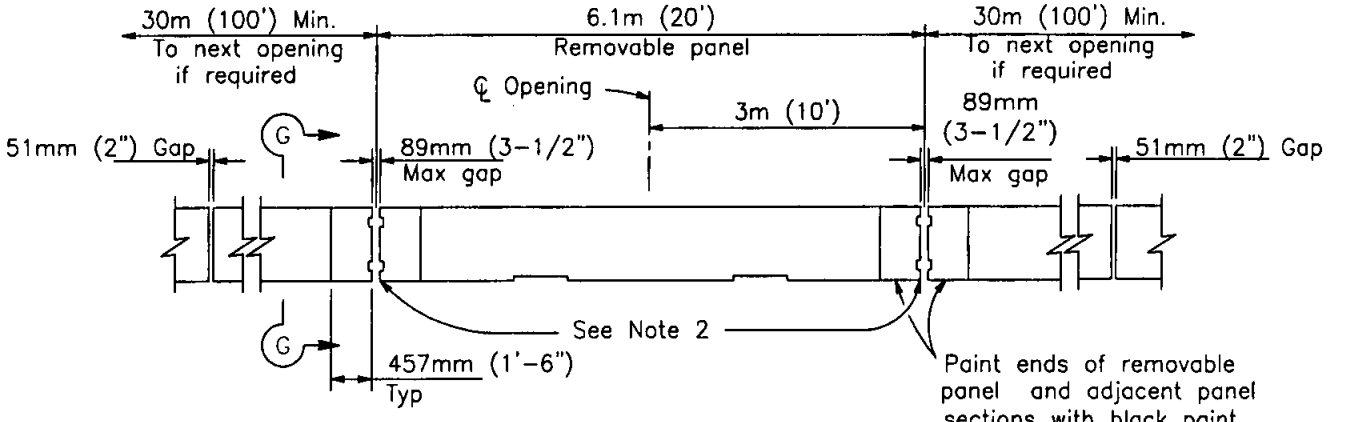

ELEVATION

TYPICAL OPENING DETAIL

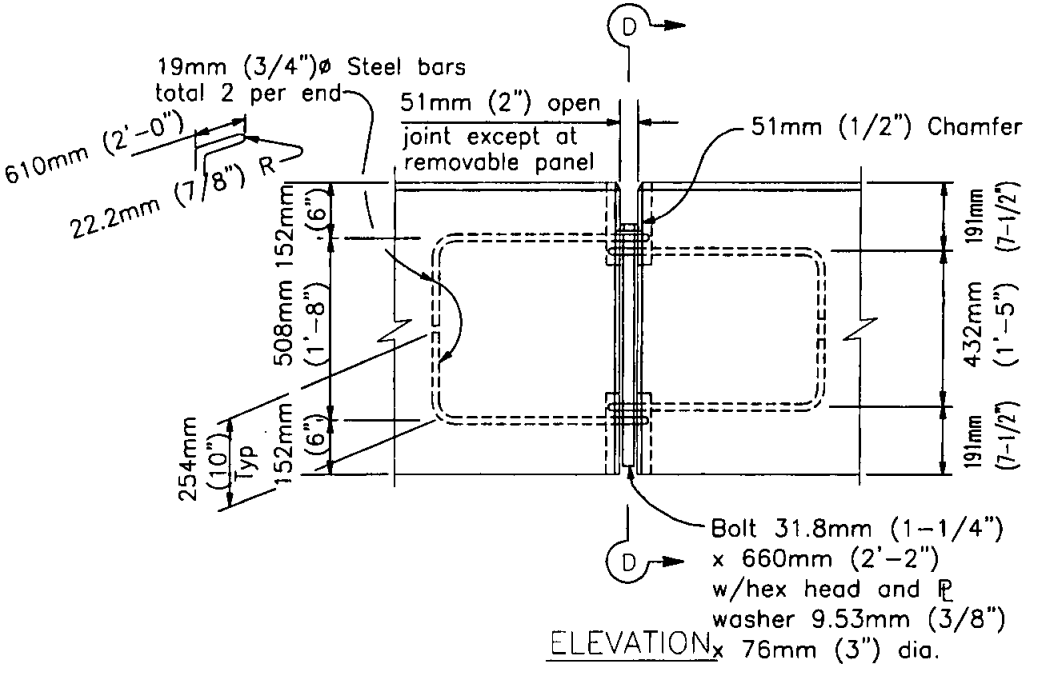

ELEVATION

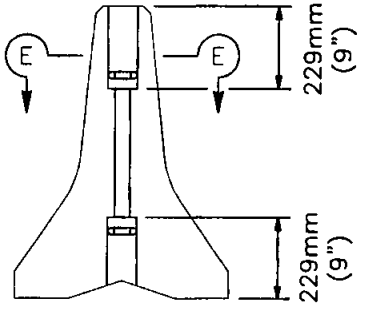

VIEW D-D

Revision	By	Approved	Date
ORIGINAL		G.Parkinson	4/92
Add Metric		T. Stanton	03/03

SAN DIEGO REGIONAL STANDARD DRAWING

TEMPORARY RAILING - TYPE K

RECOMMENDED BY THE SAN DIEGO REGIONAL STANDARDS COMMITTEE

Chairperson R.C.E. 19246 Date 3/01/2003

DRAWING NUMBER M-44C

This 2003 edition drawing is NOT in conformance with the latest Caltrans Standard Plans for Guardrails. Use Caltrans latest Standard Plans or seek Agency permission before using this drawing.

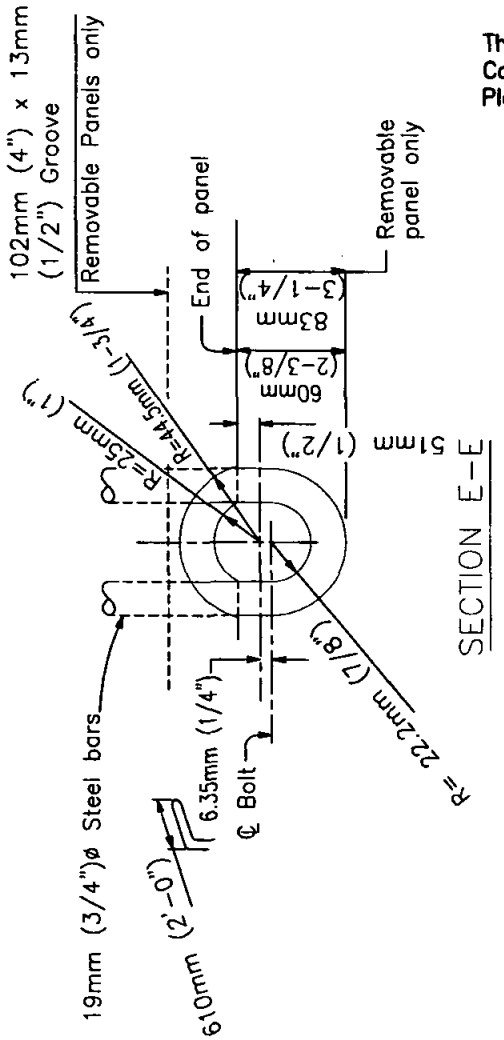

SECTION E-E

BOLT CONNECTION DETAIL

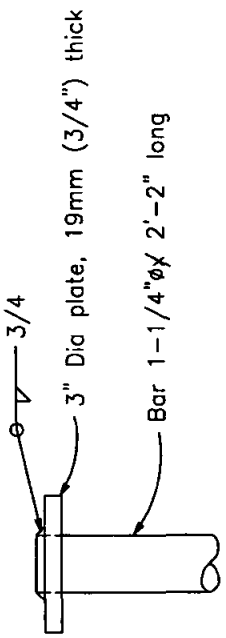

ALTERNATIVE HEAD DETAIL

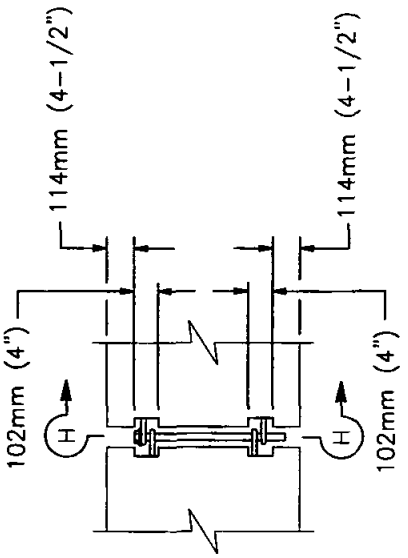

ELEVATION

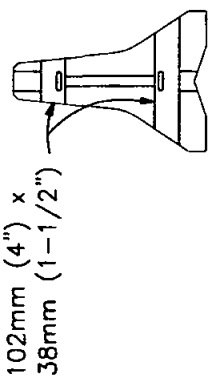

SECTION H-H

REMOVABLE PANEL GROOVE DETAILS

Revision	By	Approved	Date
ORIGINAL		G.Parkinson	4/92
Add Metric		T. Stanton	03/03

SAN DIEGO REGIONAL STANDARD DRAWING

TEMPORARY RAILING - TYPE K

RECOMMENDED BY THE SAN DIEGO REGIONAL STANDARDS COMMITTEE

T. Stanton 3/01/2003

Chairperson R.C.E. 19246 Date

DRAWING NUMBER M-44D

This 2003 edition drawing is NOT in conformance with the latest Caltrans Standard Plans for Guardrails. Use Caltrans latest Standard Plans or seek Agency permission before using this drawing.

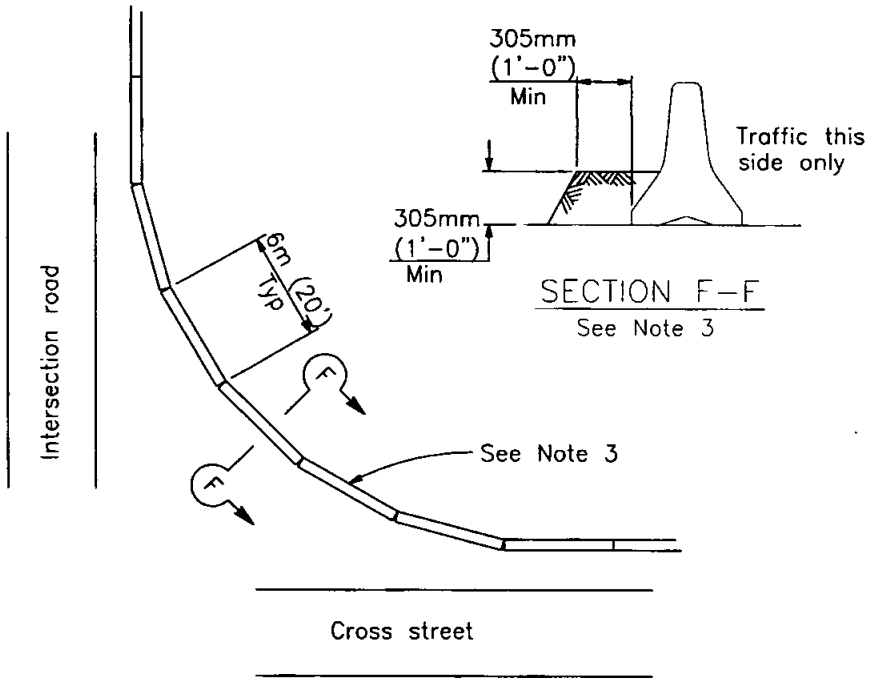

CURVED LAYOUT

NOTES

1. For end treatment, layout and crash cushions, where needed, see Project Plans or Special Provisions.
2. All 89mm (3-1/2") gaps at removable panels are to be backed at the base with #32 (#10) x 203mm (8") dowel or 51mm (1/2") ø pin each side of joint. See Section G-G.
3. Where Temporary Railing (Type K) is placed on curves and radii that are too severe to connect panels with bolted joints, the railing is to be backed continuously with earth fill. See Section F-F.
4. Attach units to deck slabs when required by Bridge Plans.

Revision	By	Approved	Date
ORIGINAL		G.Parkinson	4/92
Add Metric		T. Stanton	03/03

SAN DIEGO REGIONAL STANDARD DRAWING

TEMPORARY RAILING - TYPE K

RECOMMENDED BY THE SAN DIEGO REGIONAL STANDARDS COMMITTEE

T. Stanton 3/01/2003

Chairperson R.C.E. 19246 Date

DRAWING NUMBER M-44E

NOTES

1. Structural steel tubing used for post & sleeves shall be galvanized 12 gauge cold rolled steel, of the nominal dimensions shown hereon and meet the requirements of ASTM A446 Grade A.
2. Galvanizing shall be per ASTM A525. Posts & sleeves shall have 11mm(7/16") dia. holes spaced 25mm(1") o.c. ±3mm(1/8") & shall have no more variation in straightness than 1.6mm(1/16") in 914mm(3'). Posts shall be square within ±.36mm(0.014"), have twist no greater than 0.062" in 3' and have corner radii of 4mm(5/32") ±.4mm(1/64").
3. The signs shall be mounted on posts in accordance with Section 56, "Signs" of the State Standard Specifications. All fastening hardware is to be provided by the Contractor.
4. Maximum sign size 5.2 sq. ft.

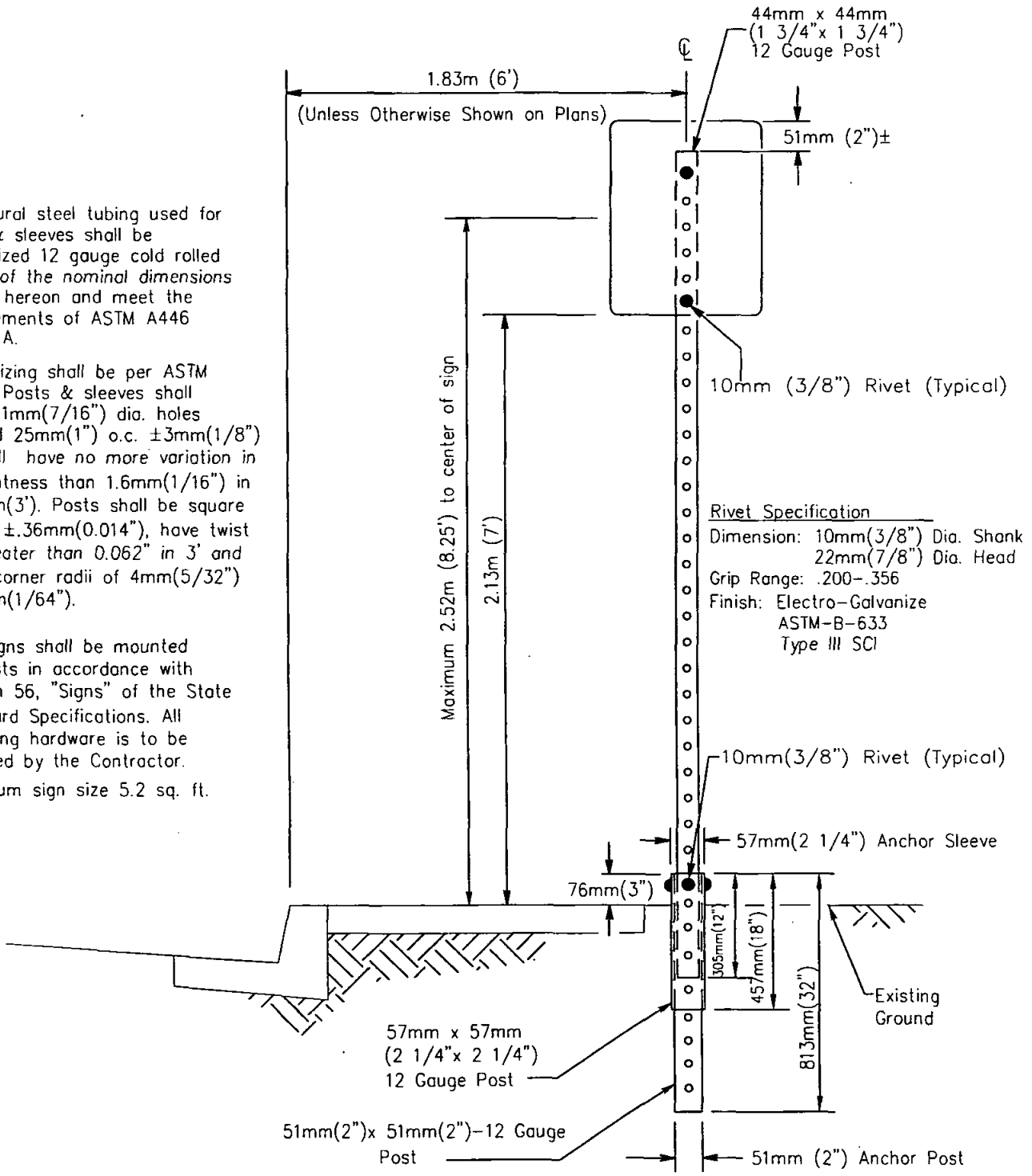

Revision	By	Approved	Date
ORIGINAL		G.Parkinson	2/95
Add Metric		T. Stanton	03/03

SAN DIEGO REGIONAL STANDARD DRAWING

BREAK-AWAY SIGN POST

RECOMMENDED BY THE SAN DIEGO REGIONAL STANDARDS COMMITTEE

T. Stanton 3/10/2003

Chairperson R.C.E. 19246 Date

DRAWING NUMBER M-45

SEWERAGE SYSTEMS

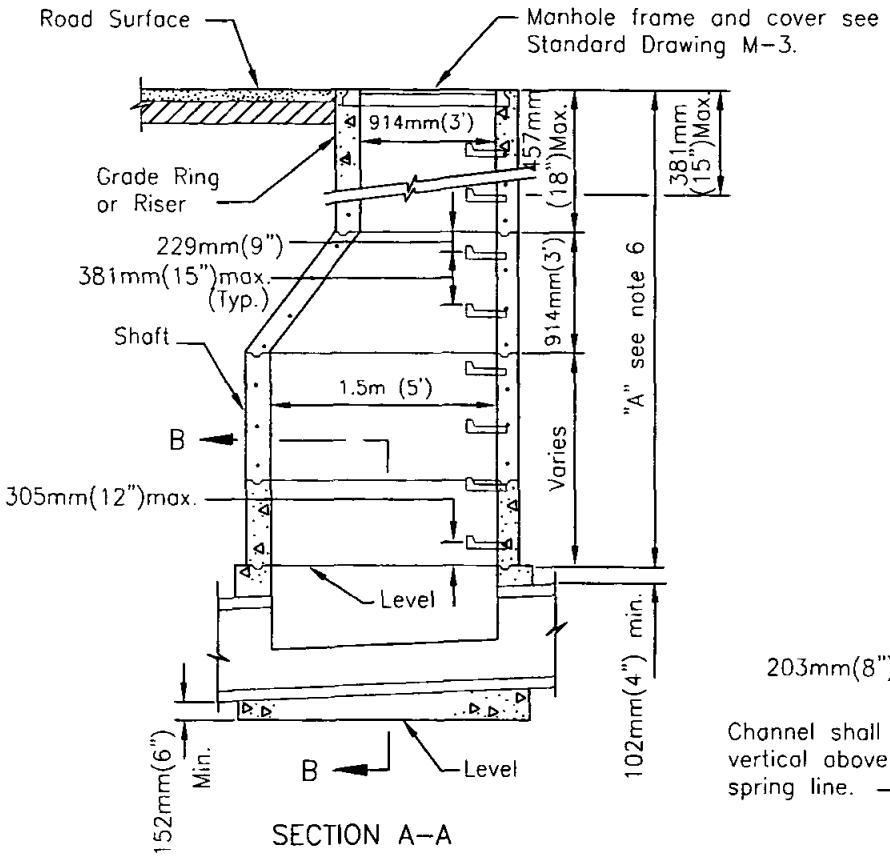

SECTION A-A

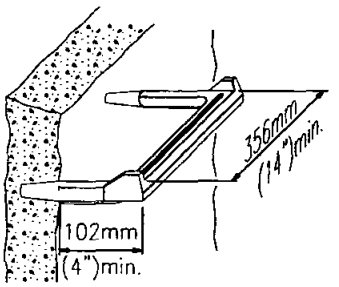

STEP DETAIL

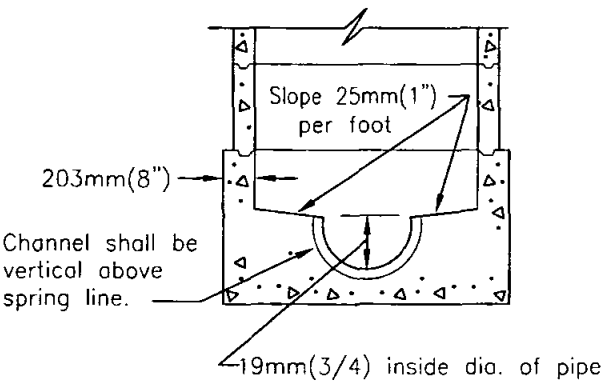

SECTION B-B

NOTES

1. Manhole frame and all joints shall be set in Class "C" mortar.
2. All precast components shall be manufactured in accordance with ASTM C-478.
3. Vertical wall of cone shall be on the upstream side of the manhole.
4. Concrete base shall be **332kg/M^3 -C-22Mpa(**560-C-3250) concrete.
5. Approved water stop required for plastic pipe connectors.
6. Precast sections shall be used within dimension"A" as required, in order of preference listed:
   A) Cone (notched for pipe if dimension "A" is less than 914mm(3').
   B) 152mm(6") to 457mm(18") of 914mm(3') diameter grade rings and/or risers.
   C) 1.5m(5') diameter shaft variable height.
   D) Top step shall be 381mm(15") maximum from top of frame and cover.
7. Flexible pipe joints shall be required within 305mm(12") of inside face of manhole, except for plastic pipe.
8. All patching within manhole base shall be epoxy mortar.
9. Prior approval of precast base is required by the Agency.

LEGEND ON PLANS

M.H. No. 2

Revision	By	Approved	Date
ORIGINAL		A.Kercheval	12/75
Add Metric		T. Stanton	03/03

SAN DIEGO REGIONAL STANDARD DRAWING

MANHOLE 1.5m(5')x 914mm(3') DIAMETER

RECOMMENDED BY THE SAN DIEGO REGIONAL STANDARDS COMMITTEE

T. Stanton 3/01/2003

Chairperson R.C.E. 19246 Date

DRAWING NUMBER S-2

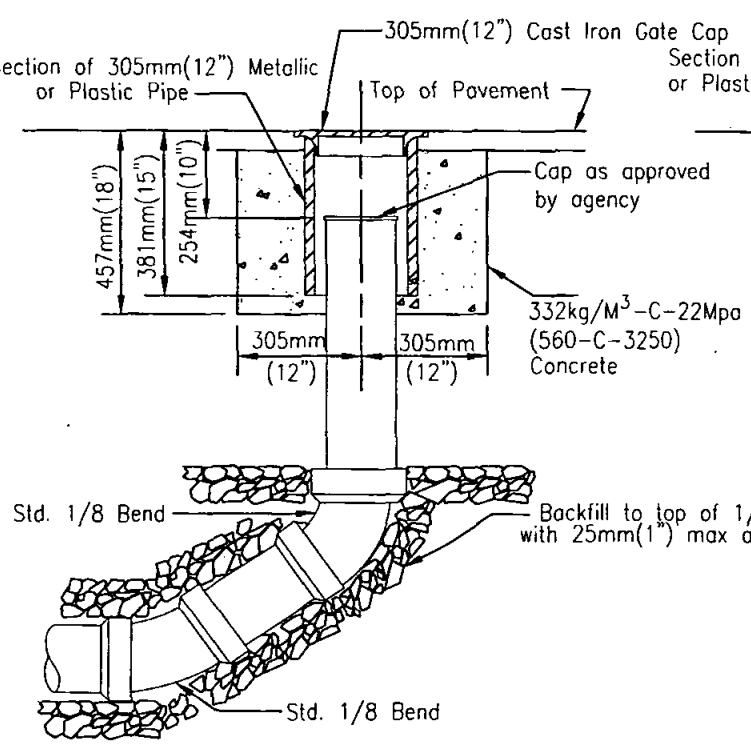

TYPE A

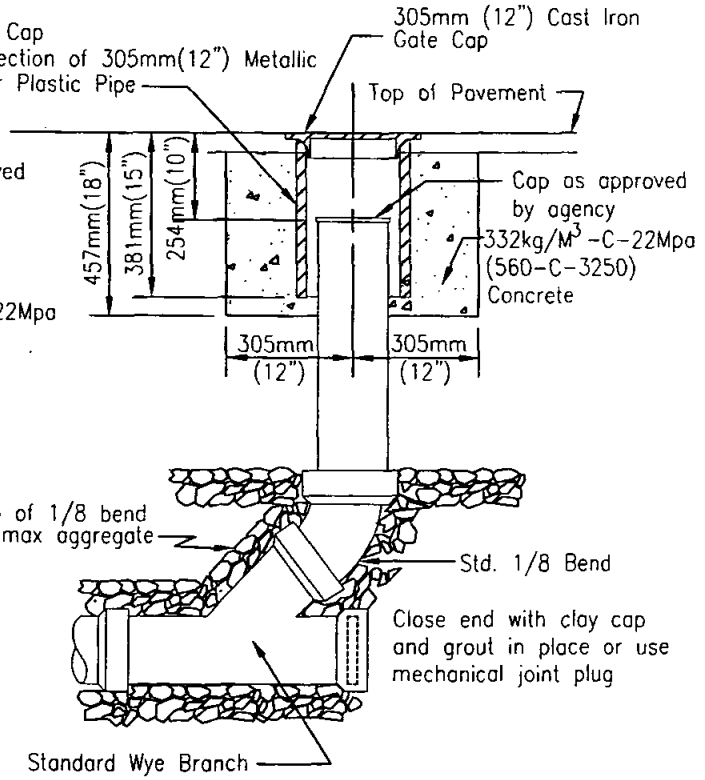

TYPE B

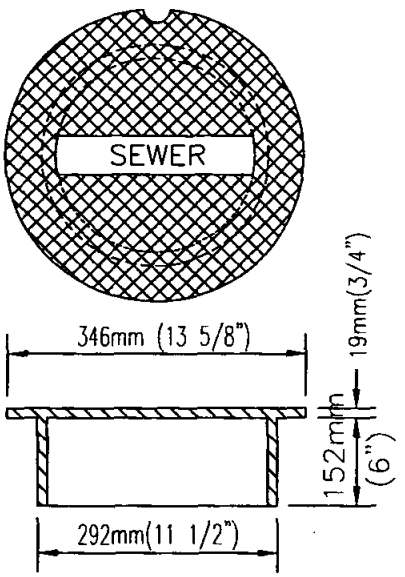

GATE CAP
(Heavy Duty)

NOTES

1. Gate cap shall be labeled "Sewer".
2. Cleanouts may be used for either V.C.P. or plastic (PVC) sewer mains.
3. Riser to be same diameter as sewer main.

Revision	By	Approved	Date
ORIGINAL		R. Munoz	4/97
Add Metric		T. Stanton	03/03

SAN DIEGO REGIONAL STANDARD DRAWING

SEWER MAIN CLEANOUT
(203mm(8") DIAMETER MAXIMUM)

RECOMMENDED BY THE SAN DIEGO REGIONAL STANDARDS COMMITTEE

T. Stanton 3/10/2003

Chairperson R.C.E. 19246 Date

DRAWING NUMBER S-3

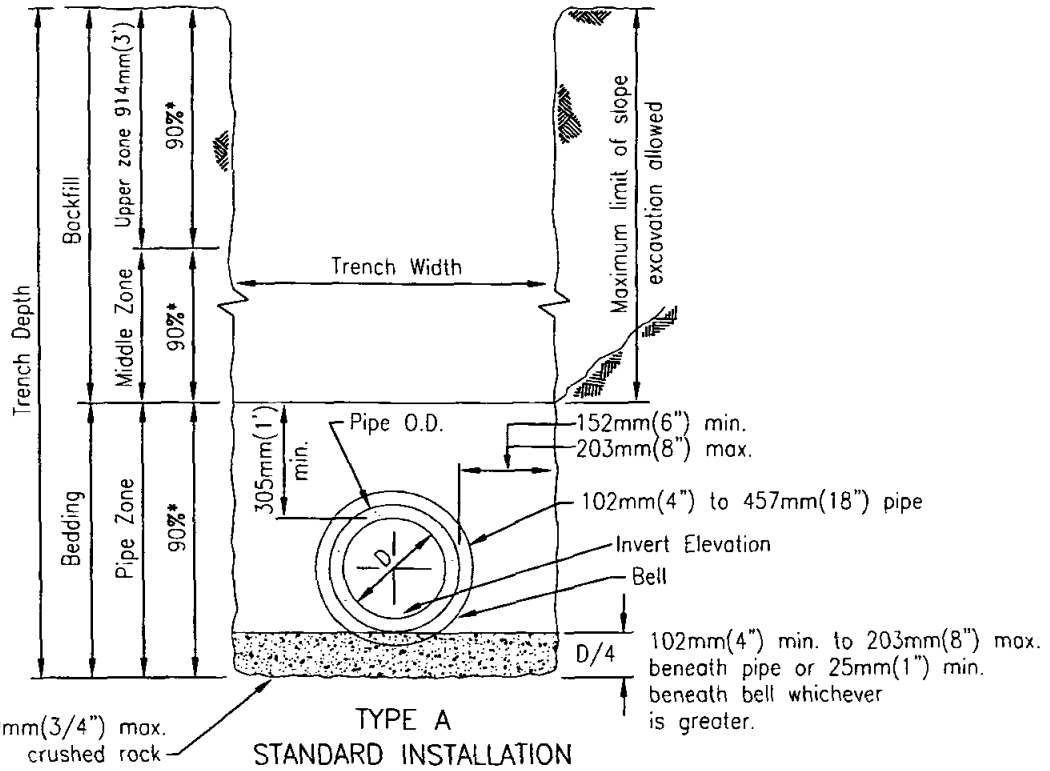

TYPE A
STANDARD INSTALLATION

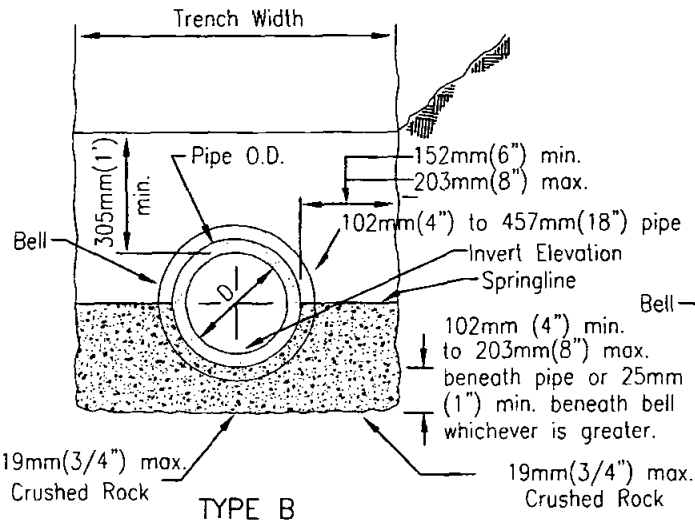

TYPE B
ROCK TO SPRINGLINE

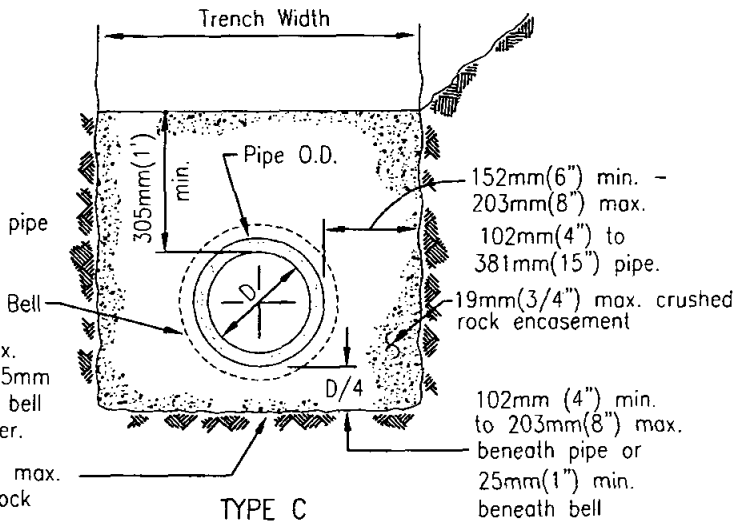

TYPE C
ROCK ENVELOPE

NOTES

1. For trenching in improved streets, see Standard Drawings G-24 or G-25 for trench resurfacing.
2. (*) indicates minimum relative compaction.
3. Minimum depth of cover from the top of pipe to finish grade for all sanitary sewer installations shall be 914mm(3') For cover less than 914mm(3'), see Standard Drawing S-7 for concrete encasement.
4. See Type A installation for details not shown for Types B and C.

Revision	By	Approved	Date
ORIGINAL		A.Kercheval	12/75
Add Metric		T. Stanton	03/03

SAN DIEGO REGIONAL STANDARD DRAWING

PIPE BEDDING AND TRENCH BACKFILL FOR SEWERS

RECOMMENDED BY THE SAN DIEGO REGIONAL STANDARDS COMMITTEE

T. Stanton 3/01/2003

Chairperson R.C.E. 19246 Date

DRAWING NUMBER S-4

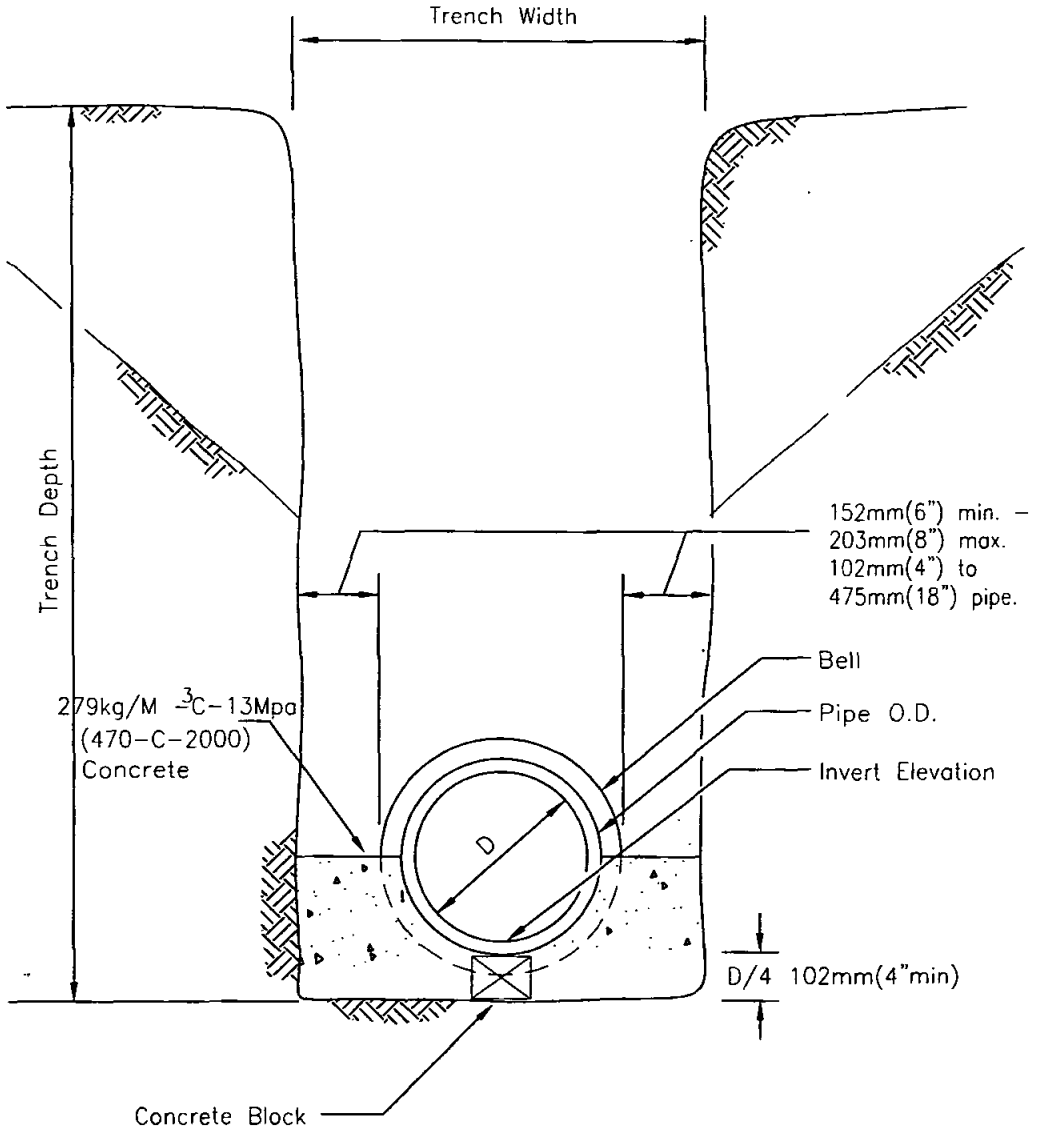

SECTION

LEGEND ON PLANS

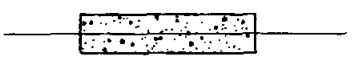

Revision	By	Approved	Date
ORIGINAL		A.Kercheval	12/75
Add Metric		T. Stanton	03/03

SAN DIEGO REGIONAL STANDARD DRAWING

CONCRETE CRADLE

RECOMMENDED BY THE SAN DIEGO REGIONAL STANDARDS COMMITTEE

T. Stanton 3/01/2003

Chairperson R.C.E. 19246 Date

DRAWING NUMBER S-6

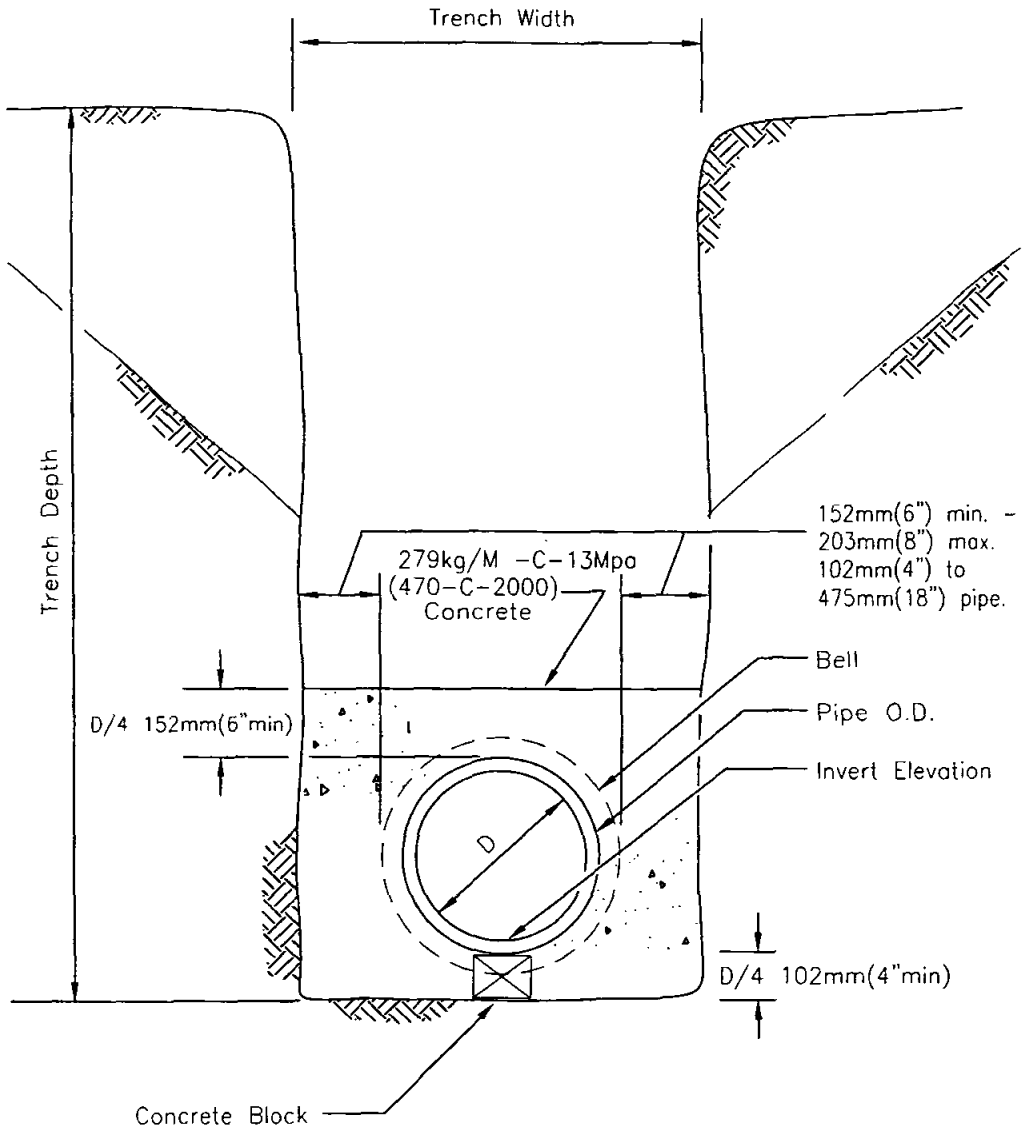

SECTION

NOTE

Encase pipe to the nearest flexible joint.

LEGEND ON PLANS

Revision	By	Approved	Date
ORIGINAL		A.Kercheval	12/75
Add Metric		T. Stanton	03/03

SAN DIEGO REGIONAL STANDARD DRAWING

CONCRETE ENCASEMENT

RECOMMENDED BY THE SAN DIEGO REGIONAL STANDARDS COMMITTEE

T. Stanton 3/10/2003

Chairperson R.C.E. 19246 Date

DRAWING NUMBER S-7

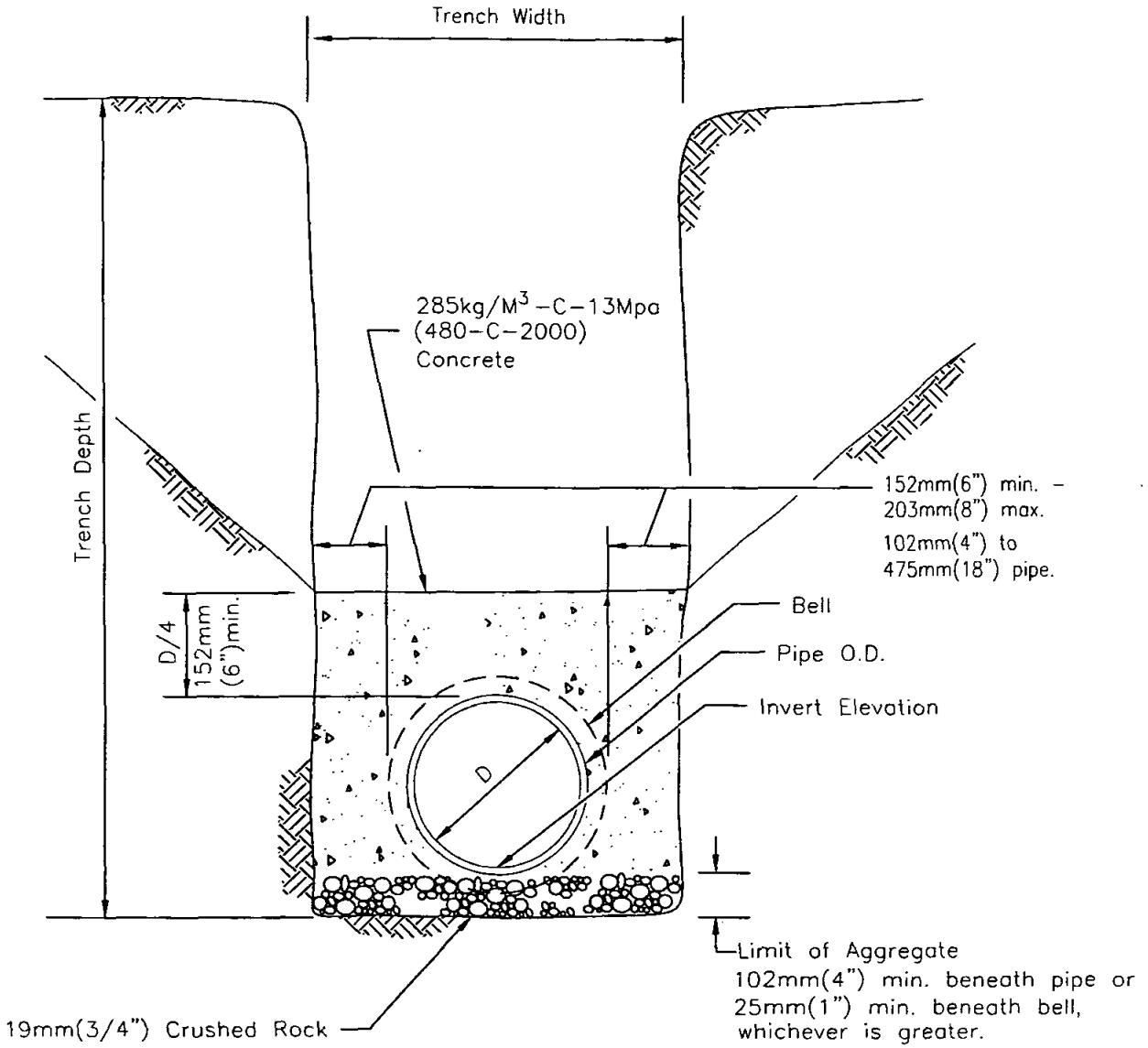

SECTION

LEGEND ON PLANS

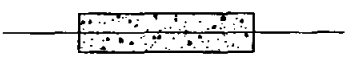

Revision	By	Approved	Date
ORIGINAL		G.Parkinson	2/95
Add Metric		T. Stanton	03/03

SAN DIEGO REGIONAL STANDARD DRAWING

CONCRETE BACKFILL

RECOMMENDED BY THE SAN DIEGO REGIONAL STANDARDS COMMITTEE

T. Stanton 3/10/2003

Chairperson R.C.E. 19246 Date

DRAWING NUMBER S-8

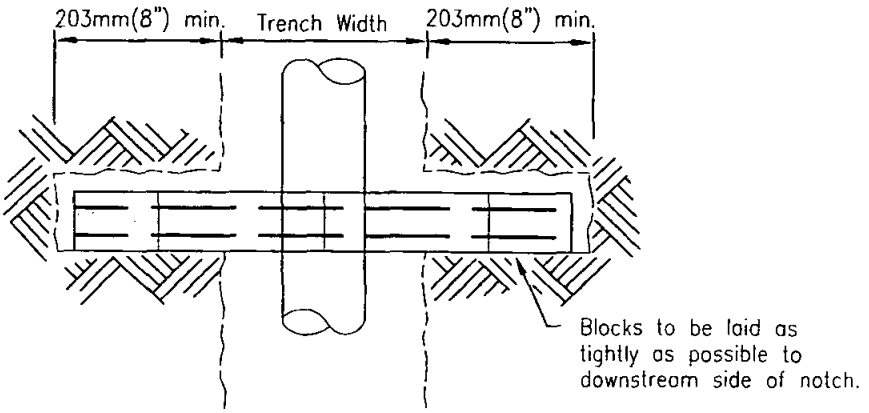

PLAN

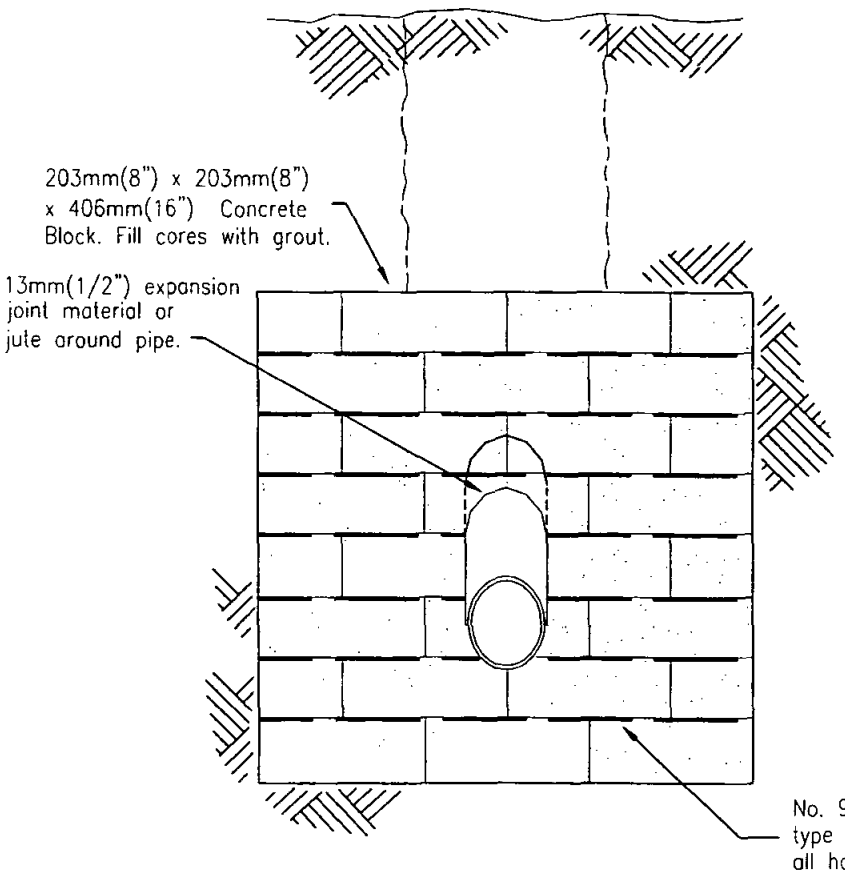

FRONT ELEVATION

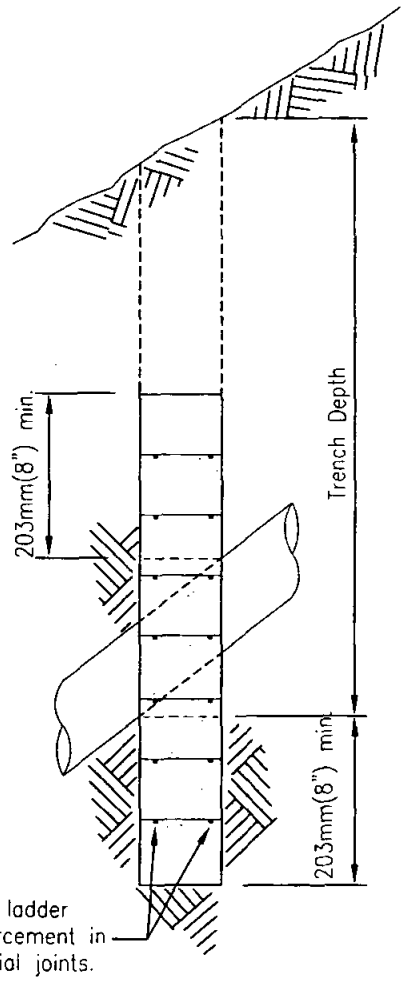

SIDE ELEVATION

LEGEND ON PLANS

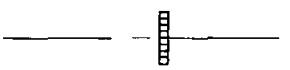

Revision	By	Approved	Date
ORIGINAL		A.Kercheval	12/75
Add Metric		T. Stanton	03/03

SAN DIEGO REGIONAL STANDARD DRAWING

CONCRETE ANCHOR

RECOMMENDED BY THE SAN DIEGO REGIONAL STANDARDS COMMITTEE

T. Stanton 3/10/2003

Chairperson R.C.E. 19246 Date

DRAWING NUMBER S-9

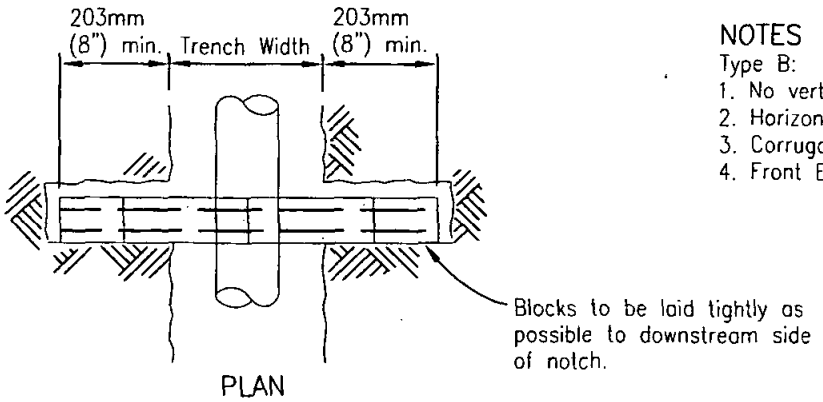

PLAN

NOTES

Type B:

1. No vertical joints permitted.
2. Horizontal joints must overlay by 2 corrugations.
3. Corrugations to run horizontally.
4. Front Elevation and Plan views similar to Type A.

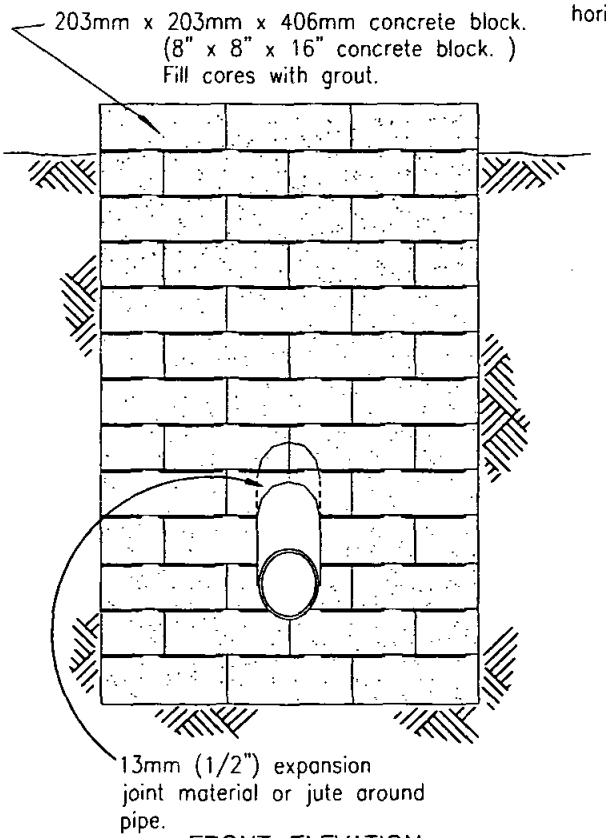

FRONT ELEVATION

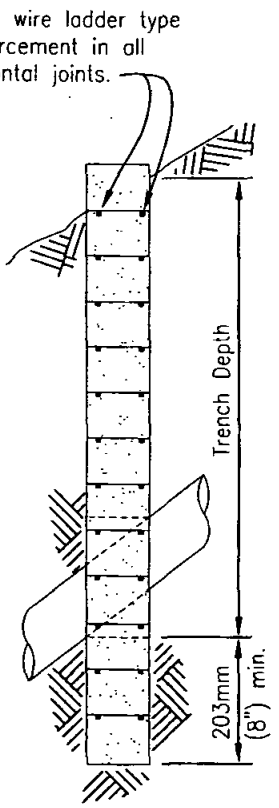

SIDE ELEVATION

TYPE A

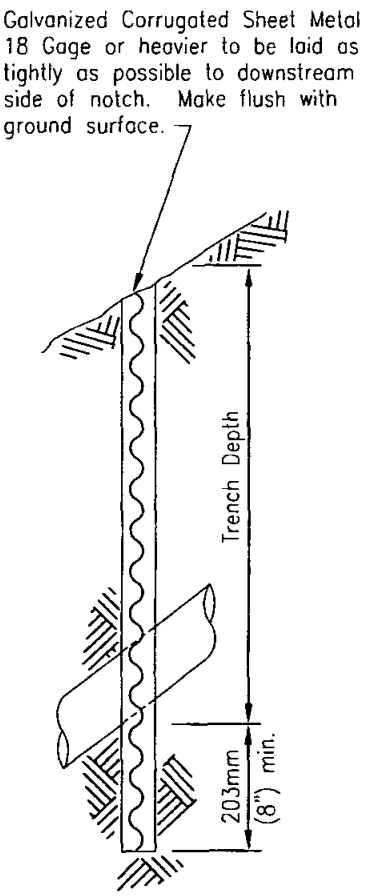

ELEVATION

TYPE B

LEGEND ON PLANS

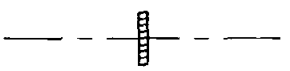

Revision	By	Approved	Date
ORIGINAL		A.Kercheval	12/75
Add Metric		T. Stanton	03/03

SAN DIEGO REGIONAL STANDARD DRAWING

CUTOFF WALL

RECOMMENDED BY THE SAN DIEGO REGIONAL STANDARDS COMMITTEE

T. Stanton 3/01/2003

Chairperson R.C.E. 19246 Date

DRAWING NUMBER S-10

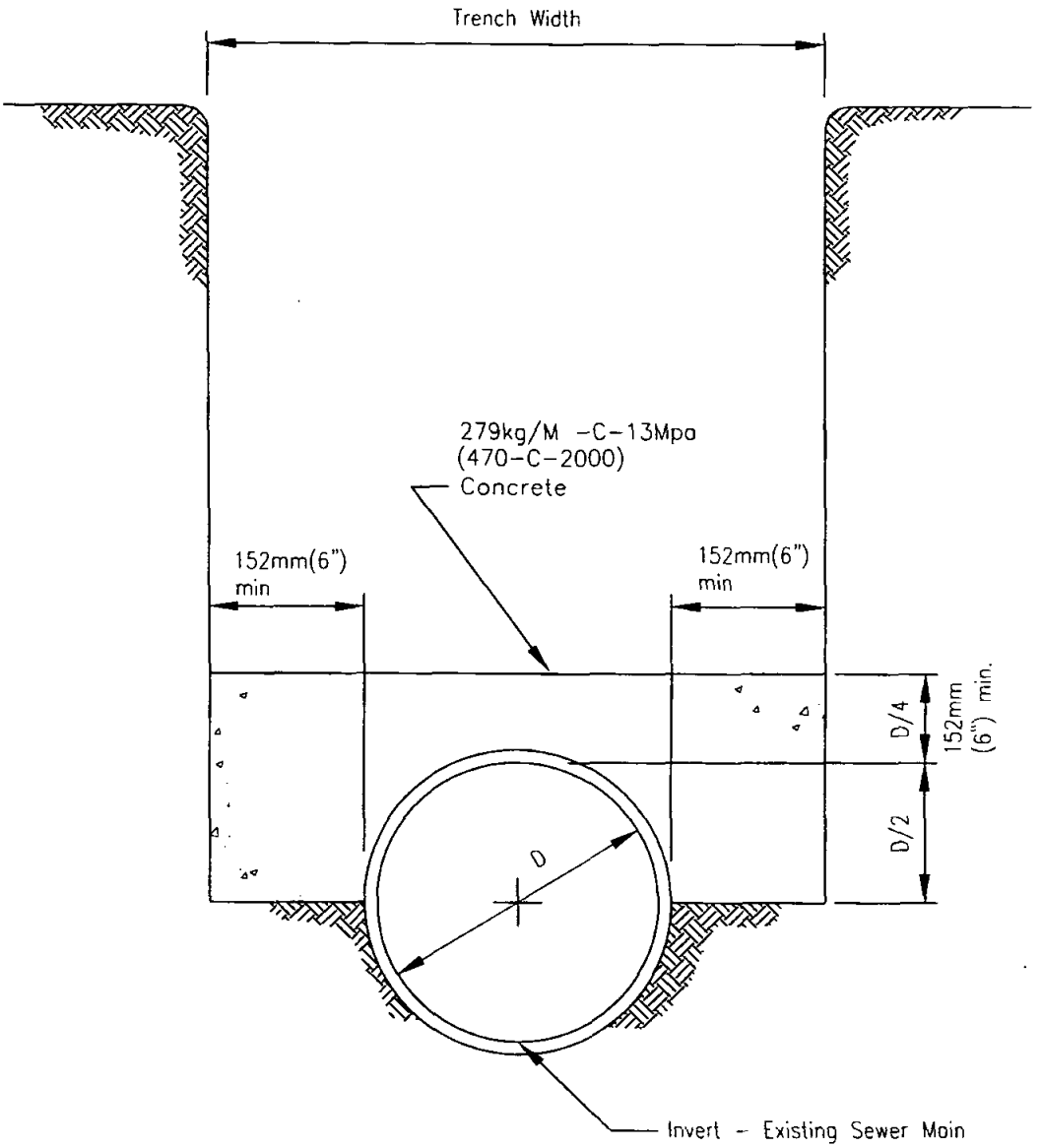

SECTION

Revision	By	Approved	Date
ORIGINAL		A.Kercheval	12/75
Add Metric		T. Stanton	03/03

SAN DIEGO REGIONAL STANDARD DRAWING

CONCRETE PROTECTION
FOR EXISTING SEWER PIPE

RECOMMENDED BY THE SAN DIEGO REGIONAL STANDARDS COMMITTEE

T. Stanton 3/10/2003

Chairperson R.C.E. 19246 Date

DRAWING NUMBER S-11

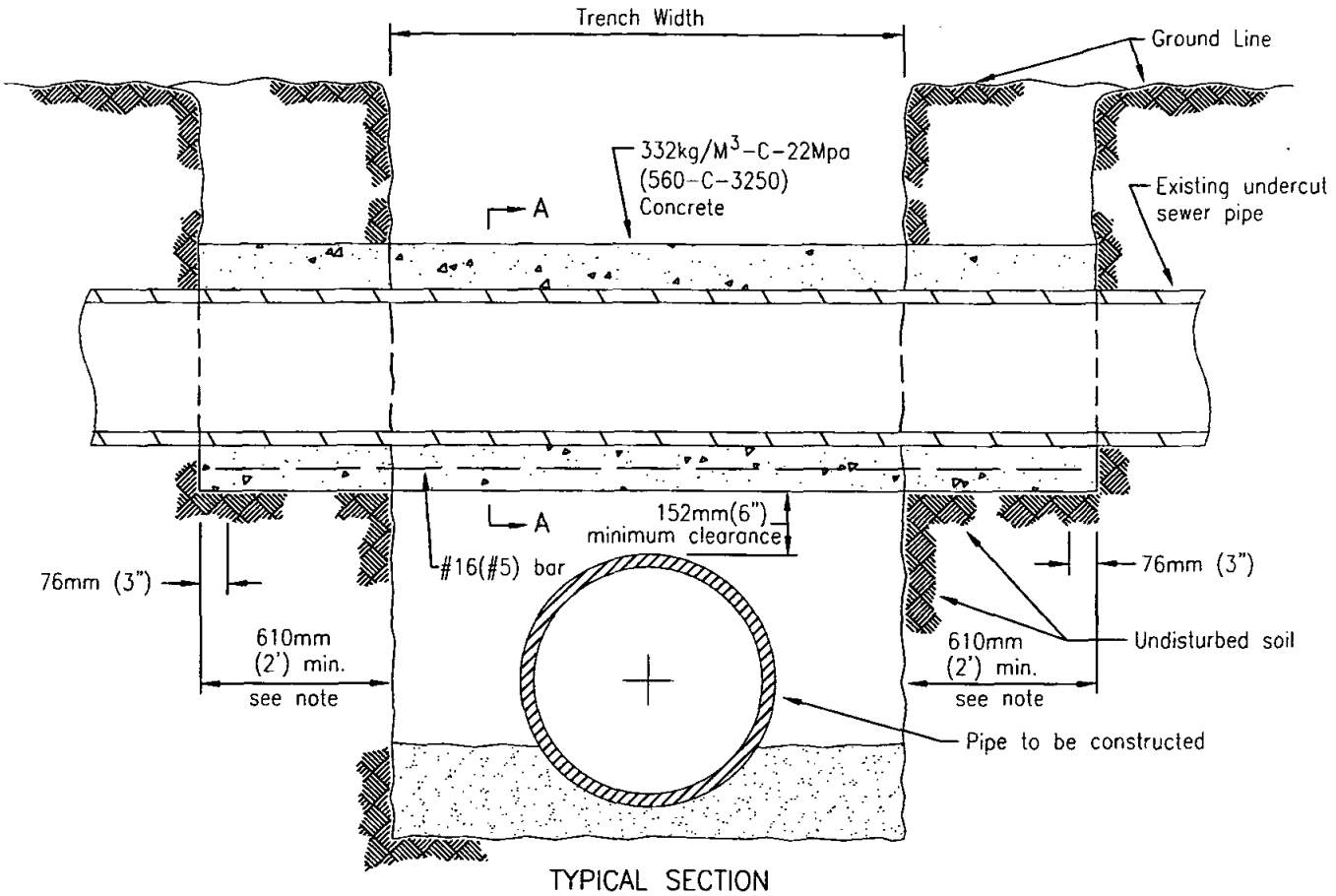

TYPICAL SECTION

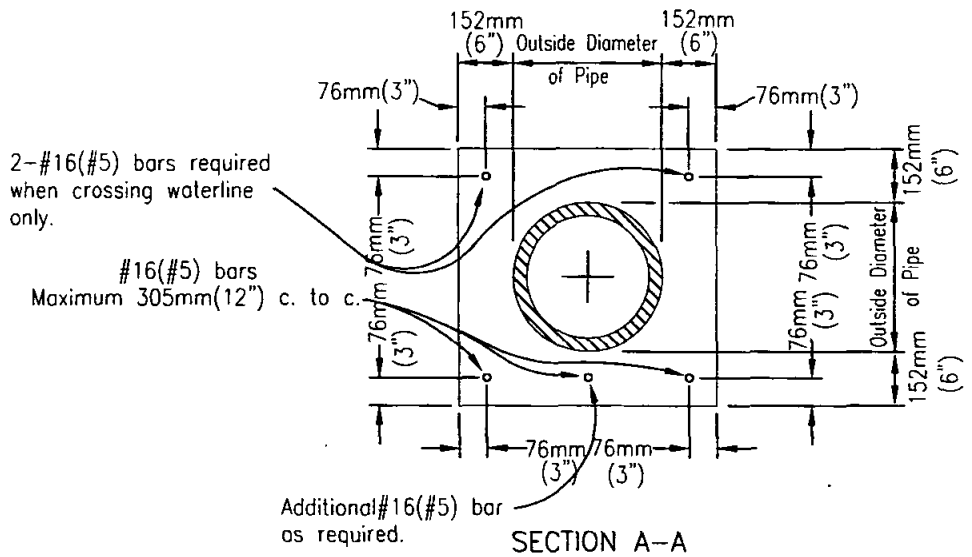

SECTION A-A

NOTE

For water line construction encasement shall extend to first joint beyond 610mm(2')at both sides of trench or to a distance of 1.2m(4'), whichever is less.

LEGEND ON PLANS

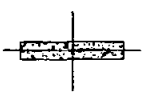

Revision	By	Approved	Date
ORIGINAL		A.Kercheval	12/75
Add Metric		T. Stanton	03/03

SAN DIEGO REGIONAL STANDARD DRAWING

CONCRETE SUPPORT
FOR UNDERCUT SEWER PIPE

RECOMMENDED BY THE SAN DIEGO REGIONAL STANDARDS COMMITTEE

T. Stanton 3/01/2003

Chairperson R.C.E. 19246 Date

DRAWING NUMBER S-12

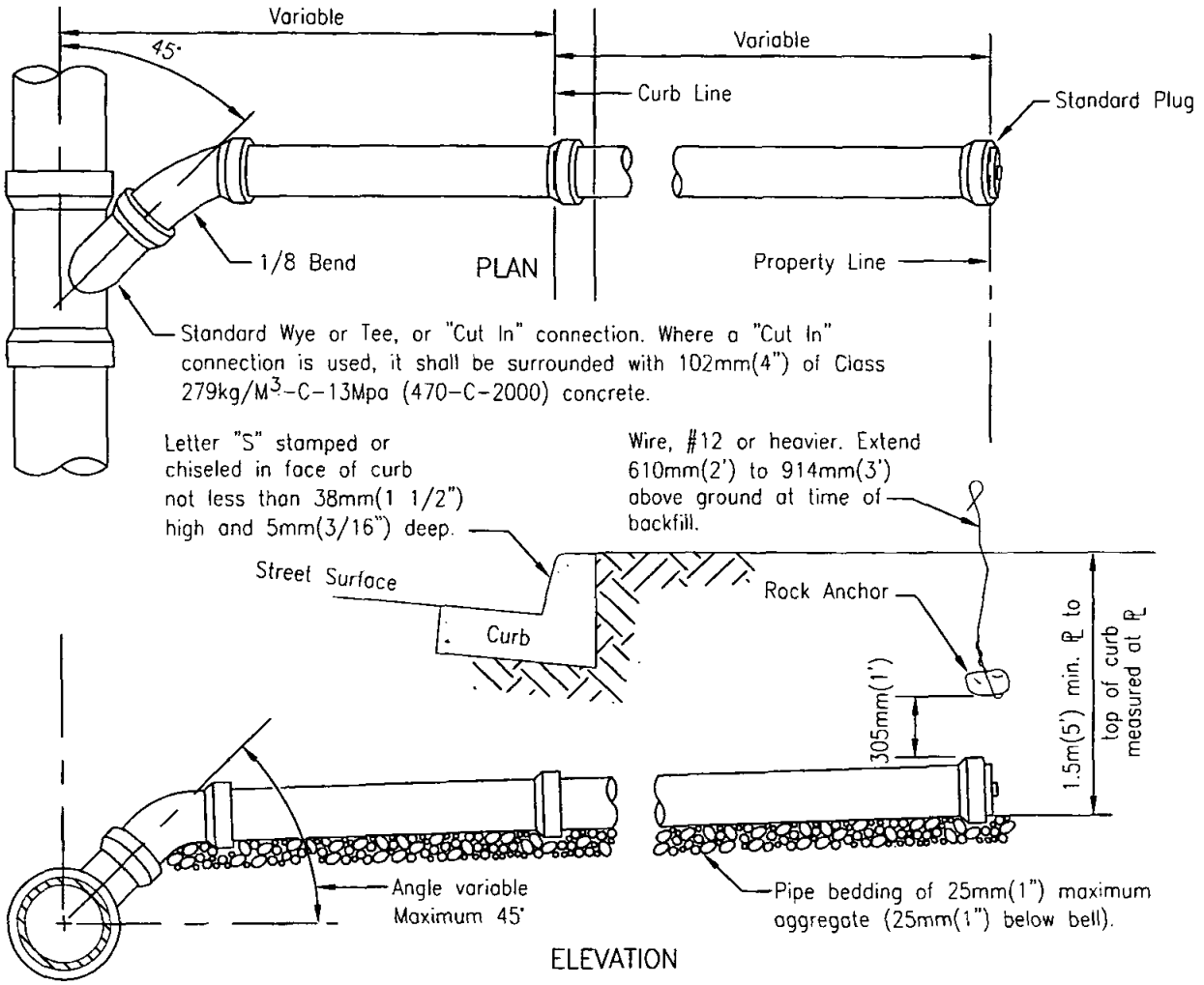

ELEVATION

Detail showing the manner of connecting opposite laterals to a sewer main. Two connections shall not be made in the same length of pipe.

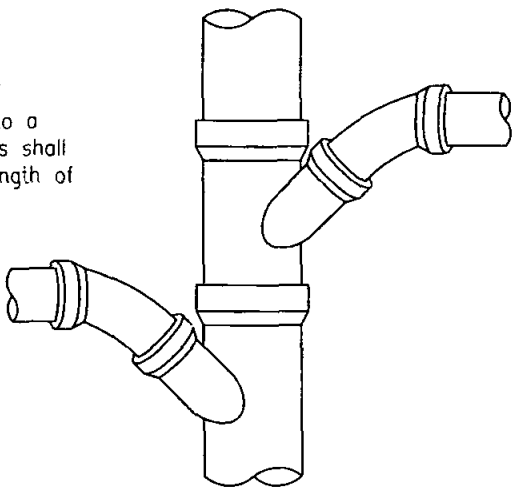

NOTES

1. In no case shall a lateral connect to the sewer main directly on top of the pipe.
2. Sewer laterals shall have a minimum slope of 2%.
3. All joints on sewer lateral pipe shall be compression type or approved solvent weld.
4. Lateral shall extend to property line unless otherwise shown on plans.

LEGEND ON PLANS

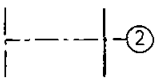

Revision	By	Approved	Date
ORIGINAL		A.Kercheval	12/75
Add Metric		T. Stanton	03/03

SAN DIEGO REGIONAL STANDARD DRAWING

HOUSE CONNECTION (SEWER LATERAL)

RECOMMENDED BY THE SAN DIEGO REGIONAL STANDARDS COMMITTEE

T. Stanton 3/10/2003

Chairperson R.C.E. 19246 Date

DRAWING NUMBER S-13

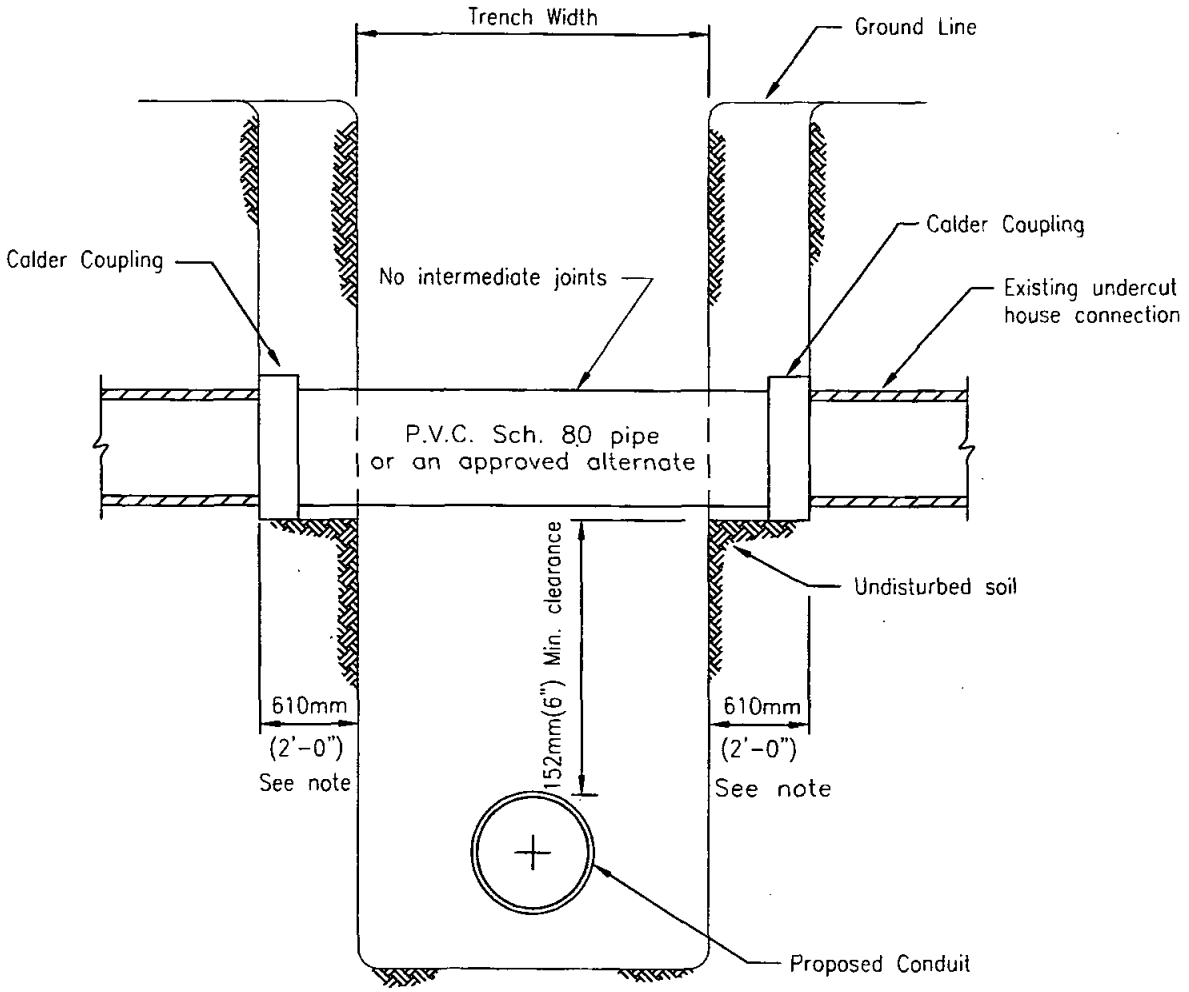

SECTION

NOTE

For water line construction, repair pipe shall extend to first joint beyond 610mm(2') at both sides of trench or to a distance of 1.22m (4'), whichever is less.

Revision	By	Approved	Date
ORIGINAL		A.Kercheval	12/75
Add Metric		T. Stanton	03/03

SAN DIEGO REGIONAL STANDARD DRAWING

HOUSE CONNECTION SEWER REPAIR

RECOMMENDED BY THE SAN DIEGO REGIONAL STANDARDS COMMITTEE

T. Stanton 3/10/2003

Chairperson R.C.E. 19246 Date

DRAWING NUMBER S-15

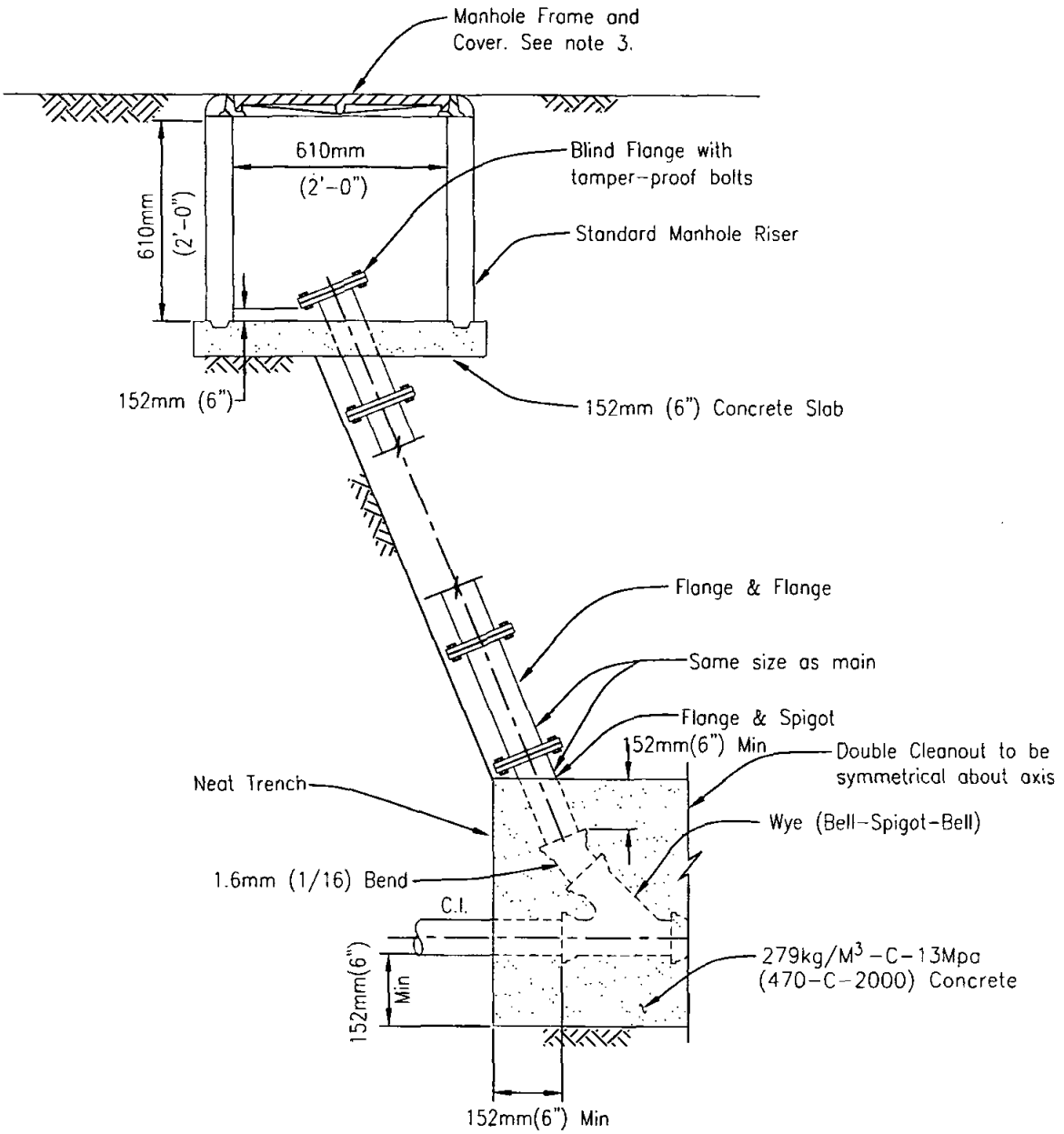

NOTES

1. Similar polyvinyl chloride components may be used in accordance with A.S.T.M. Standard Specification D-3033.

2. Concrete slab shall be 332kg/M^3-C-22Mpa (560-C-3250) concrete.

3. Use heavy duty manhole frame and cover, Standard Drawing M-1, in areas subject to vehicular traffic; use light duty manhole frame and cover, Standard Drawing M-2, in all other locations.

LEGEND ON PLANS

C.O.

Revision	By	Approved	Date
ORIGINAL		D. Solomon	7/79
Add Metric		T. Stanton	03/03

SAN DIEGO REGIONAL STANDARD DRAWING

CLEANOUT - SEWER FORCE MAIN

RECOMMENDED BY THE SAN DIEGO REGIONAL STANDARDS COMMITTEE

T. Stanton 3/10/2003

Chairperson R.C.E. 19246 Date

DRAWING NUMBER S-16

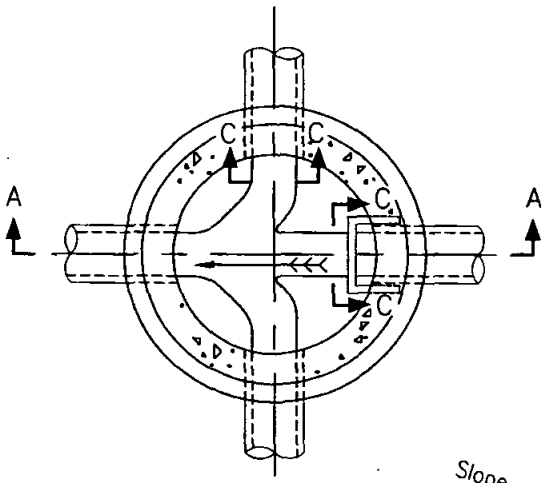

SECTION B–B

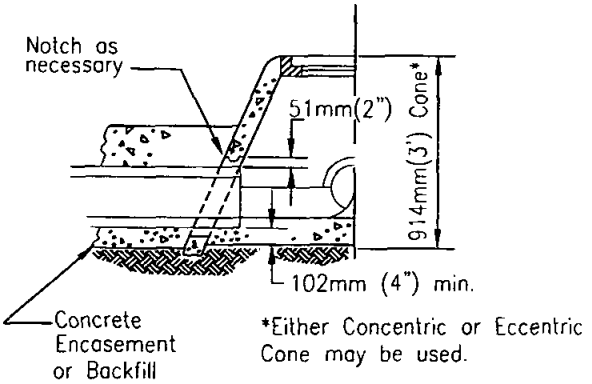

HALF SECTION SHALLOW MANHOLE

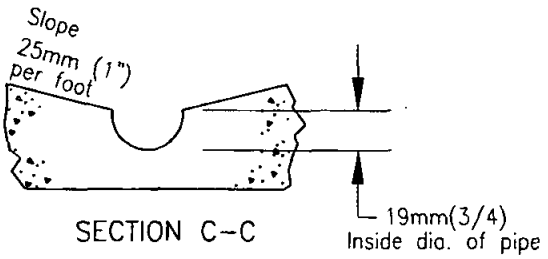

SECTION C–C

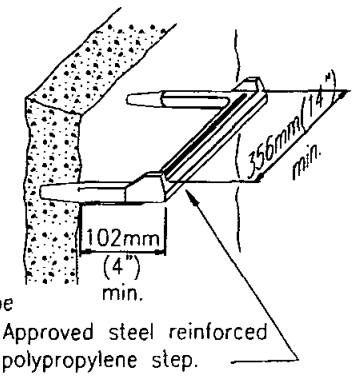

STEP DETAIL

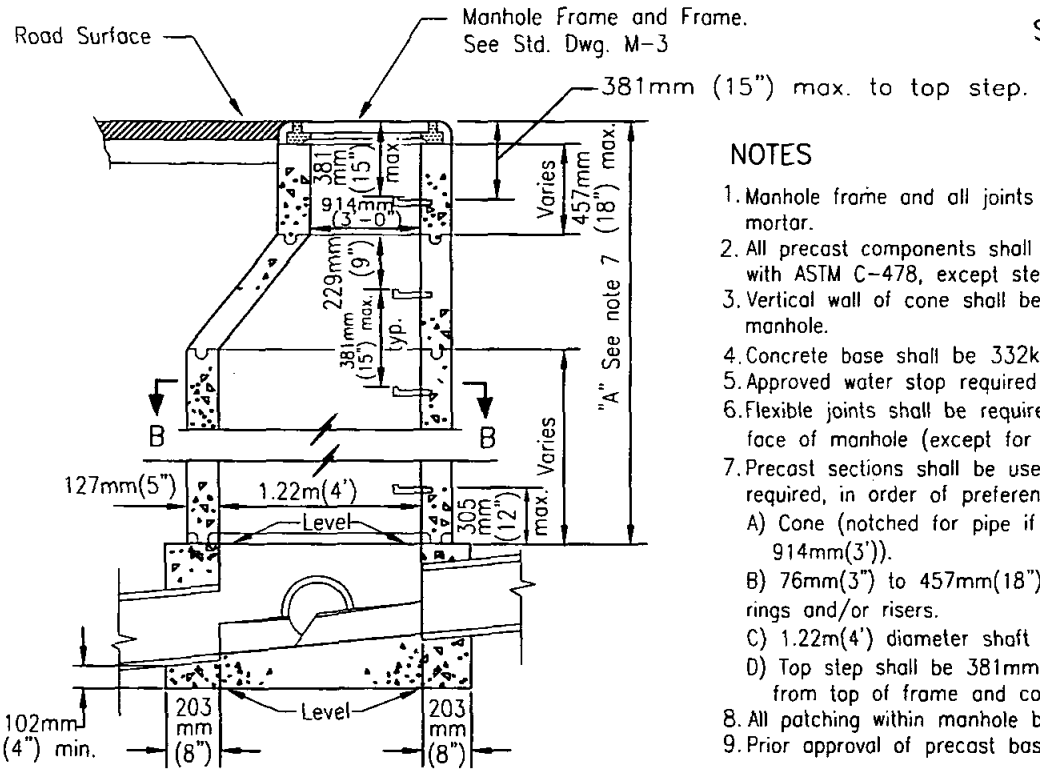

SECTION A–A

NOTES

1. Manhole frame and all joints shall be set in Class "C" mortar.
2. All precast components shall be manufactured in accordance with ASTM C-478, except step spacing.
3. Vertical wall of cone shall be on the upstream side of the manhole.
4. Concrete base shall be 332kg/M^3-C-22Mpa(560-C-3250).
5. Approved water stop required for plastic pipe connections.
6. Flexible joints shall be required within 305mm(12") of inside face of manhole (except for plastic pipe).
7. Precast sections shall be used within dimension"A" as required, in order of preference listed:
   A) Cone (notched for pipe if dimension "A" is less than 914mm(3')).
   B) 76mm(3") to 457mm(18") of 914mm(3') diameter grade rings and/or risers.
   C) 1.22m(4') diameter shaft variable height.
   D) Top step shall be 381mm(15") maximum from top of frame and cover.
8. All patching within manhole base shall be epoxy mortar.
9. Prior approval of precast base is required by the Agency.

LEGEND ON PLANS

M.H. No. 2

Revision	By	Approved	Date
ORIGINAL		D. Solomon	7/79
Add Metric		T. Stanton	03/03

SAN DIEGO REGIONAL STANDARD DRAWING

MANHOLE – 1.2m(4') x 914mm(3') DIAMETER

(FOR 381mm(15") MAXIMUM DIAMETER

RECOMMENDED BY THE SAN DIEGO REGIONAL STANDARDS COMMITTEE

T. Stanton 3/01/2003

Chairperson R.C.E. 19246 Date

DRAWING NUMBER S-17

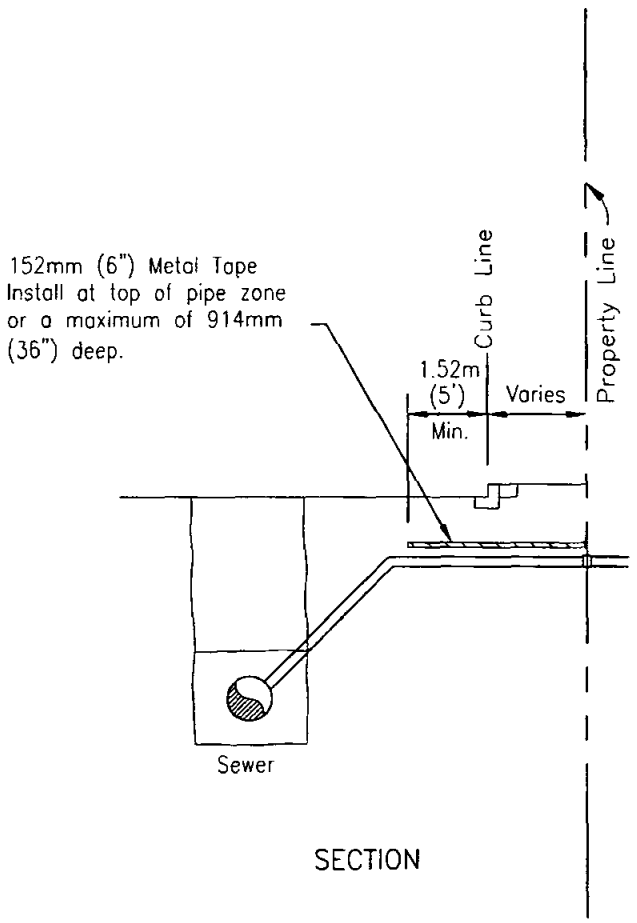

SECTION

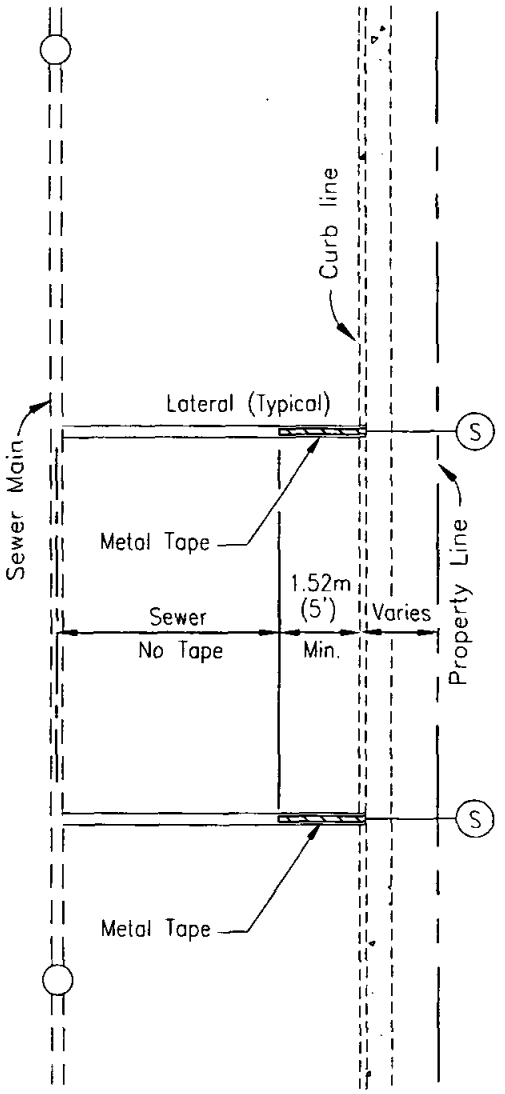

PLAN

Revision	By	Approved	Date
ORIGINAL		M.Bahmanian	4/86
Add Metric		T. Stanton	03/03

SAN DIEGO REGIONAL STANDARD DRAWING

METALLIC TAPE LOCATOR
FOR NON-METALLIC SEWER PIPE

RECOMMENDED BY THE SAN DIEGO REGIONAL STANDARDS COMMITTEE

T. Stanton 3/10/2003

Chairperson R.C.E. 19246 Date

DRAWING NUMBER S-19

WATER SYSTEMS

NOTES

1. Service clamp and gasket required on 102mm(4") A.C. pipe.
2. Tap not permitted in milled sections of A.C. pipe.

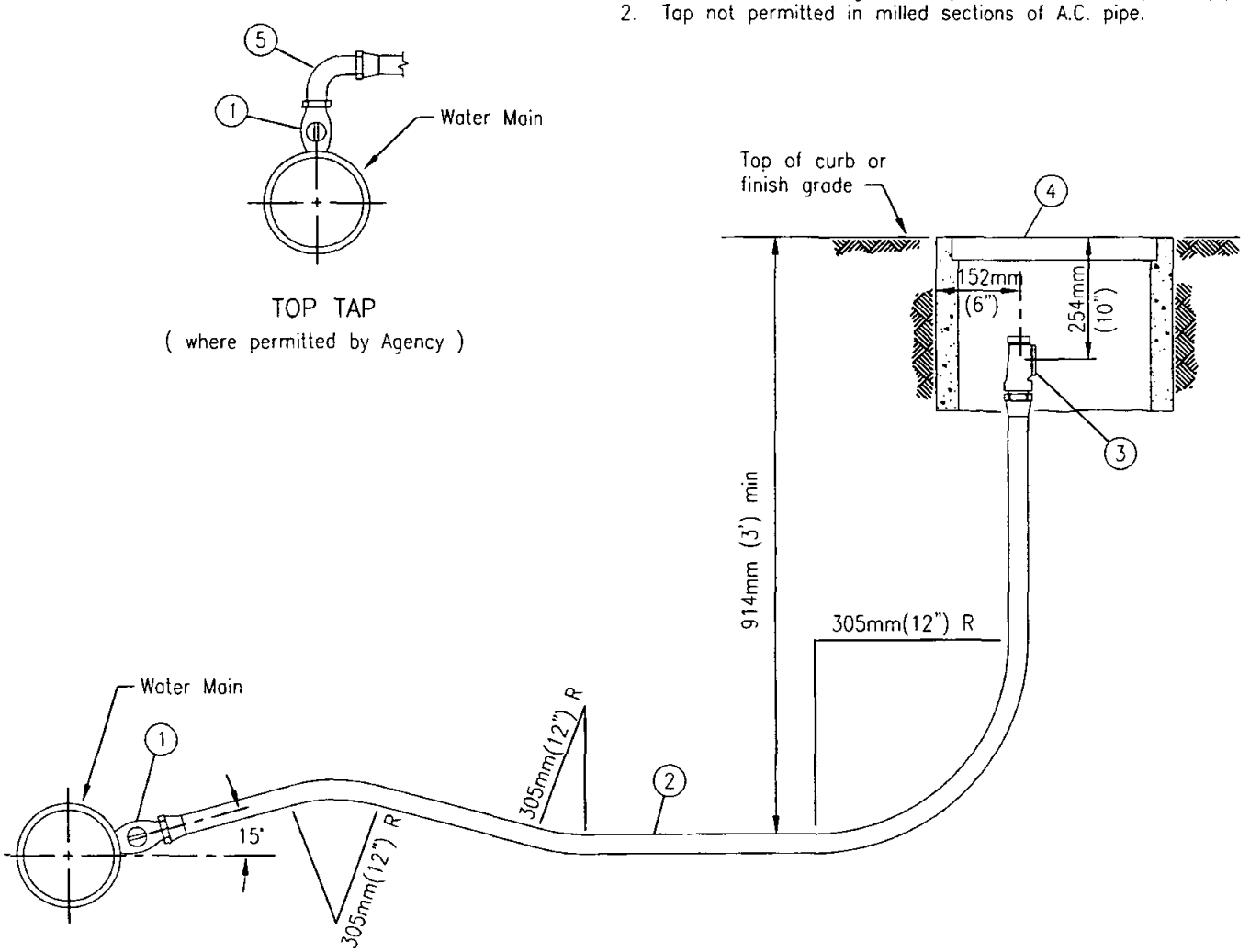

(1) Bronze Corporation Stop (installed with key on side and open top) and Adapter as required by Agency.
Note: On steel mains use clamp or weld on coupling as required by Agency.
Install insulating bushing as required by Agency.

(2) Copper Tubing or Plastic Pipe (no intermediate joints permitted without approval of the Agency).

(3) Bronze Angle Service Stop with Locking Device and Meter Coupling attached.

(4) Meter Box (see Standard Drawing W-15 for location).

(5) 90° Ell

LEGEND ON PLANS

1" (W)

Revision	By	Approved	Date
ORIGINAL		A.Kercheval	12/75
Add Metric		T. Stanton	03/03

SAN DIEGO REGIONAL STANDARD DRAWING

25mm (1") WATER SERVICE

RECOMMENDED BY THE SAN DIEGO REGIONAL STANDARDS COMMITTEE

T. Stanton 3/10/2003

Chairperson R.C.E. 19246 Date

DRAWING NUMBER W-1

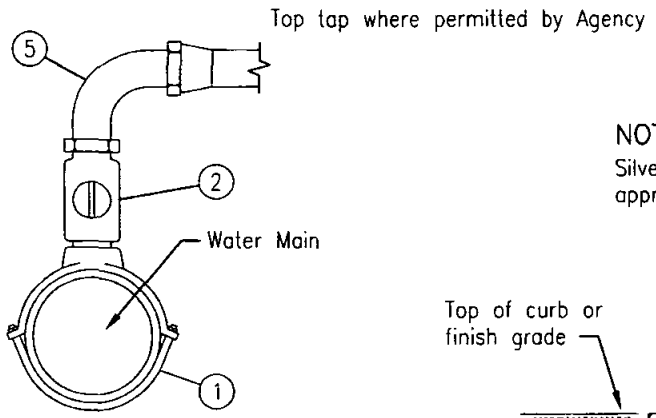

TOP TAP
(where permitted by Agency)

NOTE
Silver Soldered Joints may be used where approved by the Agency.

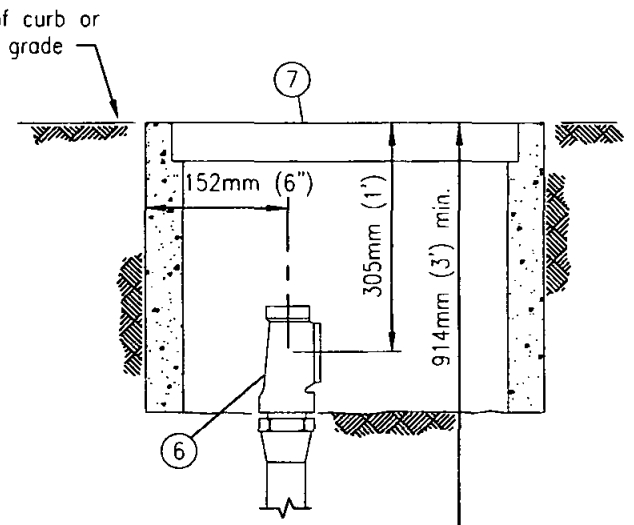

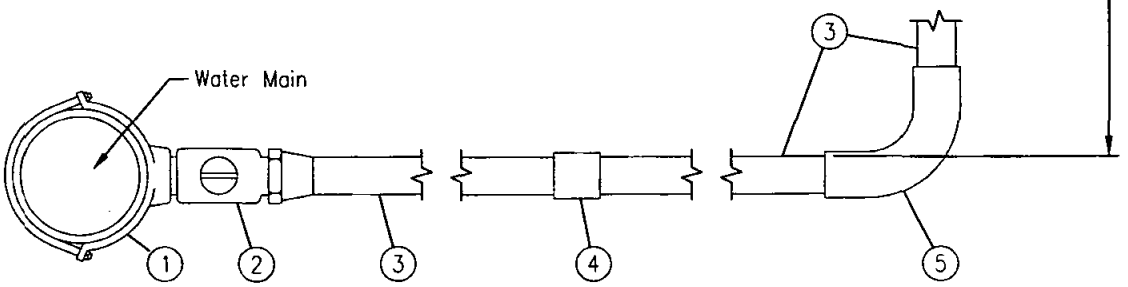

(1) Bronze Service Clamp (double strap). On steel mains use clamp or weld on coupling as required by Agency. Install insulating bushing as required by Agency.

(2) Bronze Corporation Stop (installed with key on side and open tap).

(3) Copper Tubing or Plastic Pipe except where otherwise specified by the Agency.

(4) *Coupling as required by Agency when service is 6.1m (20') or longer, except on Polyethylene Pipe.*

(5) 90° Ell

(6) Bronze Angle Service Stop with Locking Device and adaptable to 38mm (1-1/2") and 2" Meter Flange.

(7) Meter Box (see Standard Drawing W-15 for location).

LEGEND ON PLANS

2" (W)

Revision	By	Approved	Date
ORIGINAL		A.Kercheval	12/75
Add Metric		T. Stanton	03/03

SAN DIEGO REGIONAL STANDARD DRAWING

38mm(1 1/2") AND 51mm(2")
WATER SERVICES

RECOMMENDED BY THE SAN DIEGO REGIONAL STANDARDS COMMITTEE

T. Stanton 3/01/2003

Chairperson R.C.E. 19246 Date

DRAWING NUMBER W-2

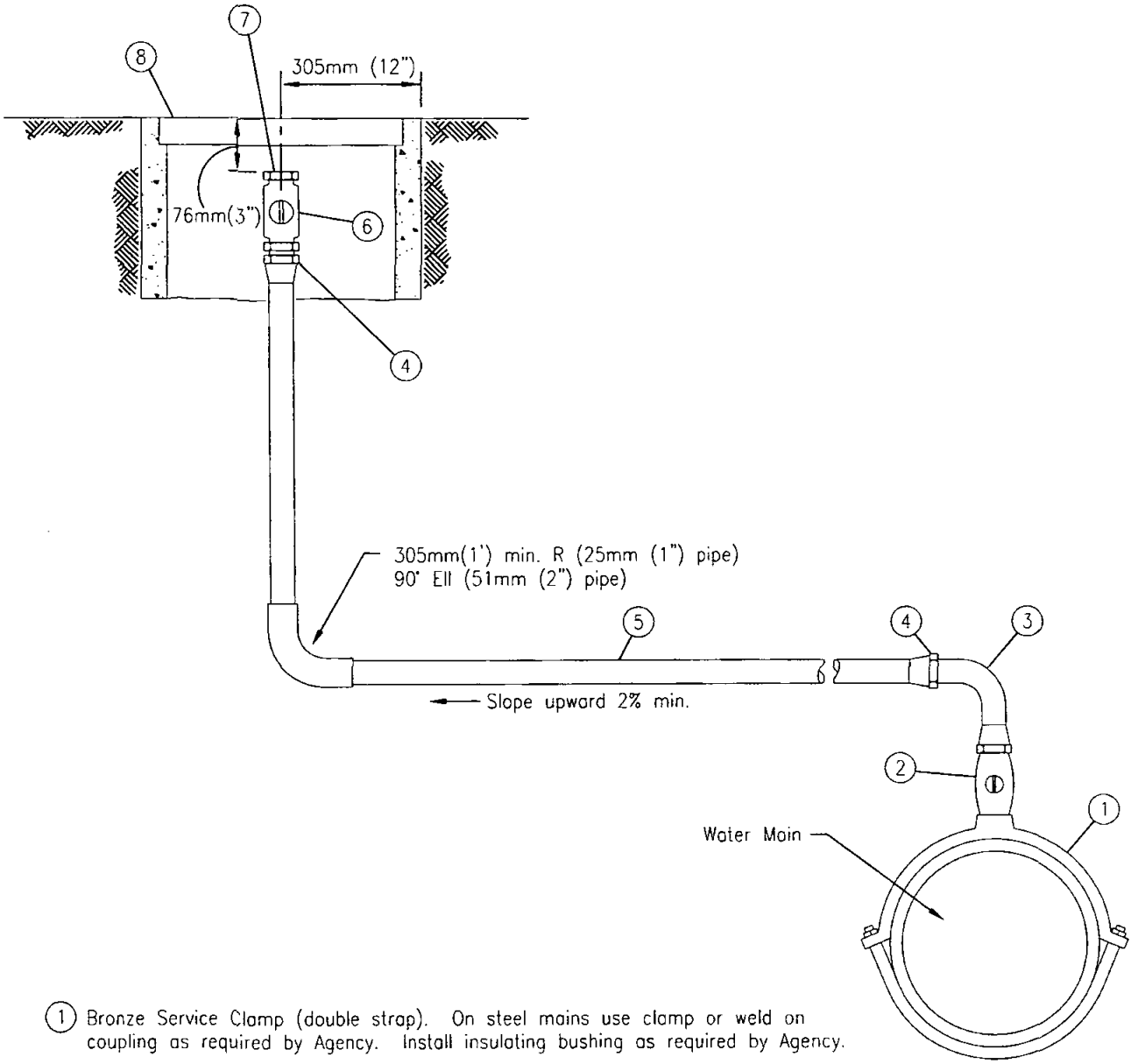

1. Bronze Service Clamp (double strap). On steel mains use clamp or weld on coupling as required by Agency. Install insulating bushing as required by Agency.
2. Bronze Corporation Stop
3. 90° Brass Street Ell.
4. Pipe to Tubing Adapter.
5. Copper Tubing.
6. Ball Valve.
7. Brass Plug.
8. Meter Box (see Standard Drawing W-15 for location).

LEGEND ON PLANS

Revision	By	Approved	Date
ORIGINAL		A.Kercheval	12/75
Add Metric		T. Stanton	03/03

SAN DIEGO REGIONAL STANDARD DRAWING

MANUAL AIR RELEASES
25mm (1") AND 51mm (2")

RECOMMENDED BY THE SAN DIEGO REGIONAL STANDARDS COMMITTEE

T. Stanton 3/10/2003

Chairperson R.C.E. 19246 Date

DRAWING NUMBER W-3

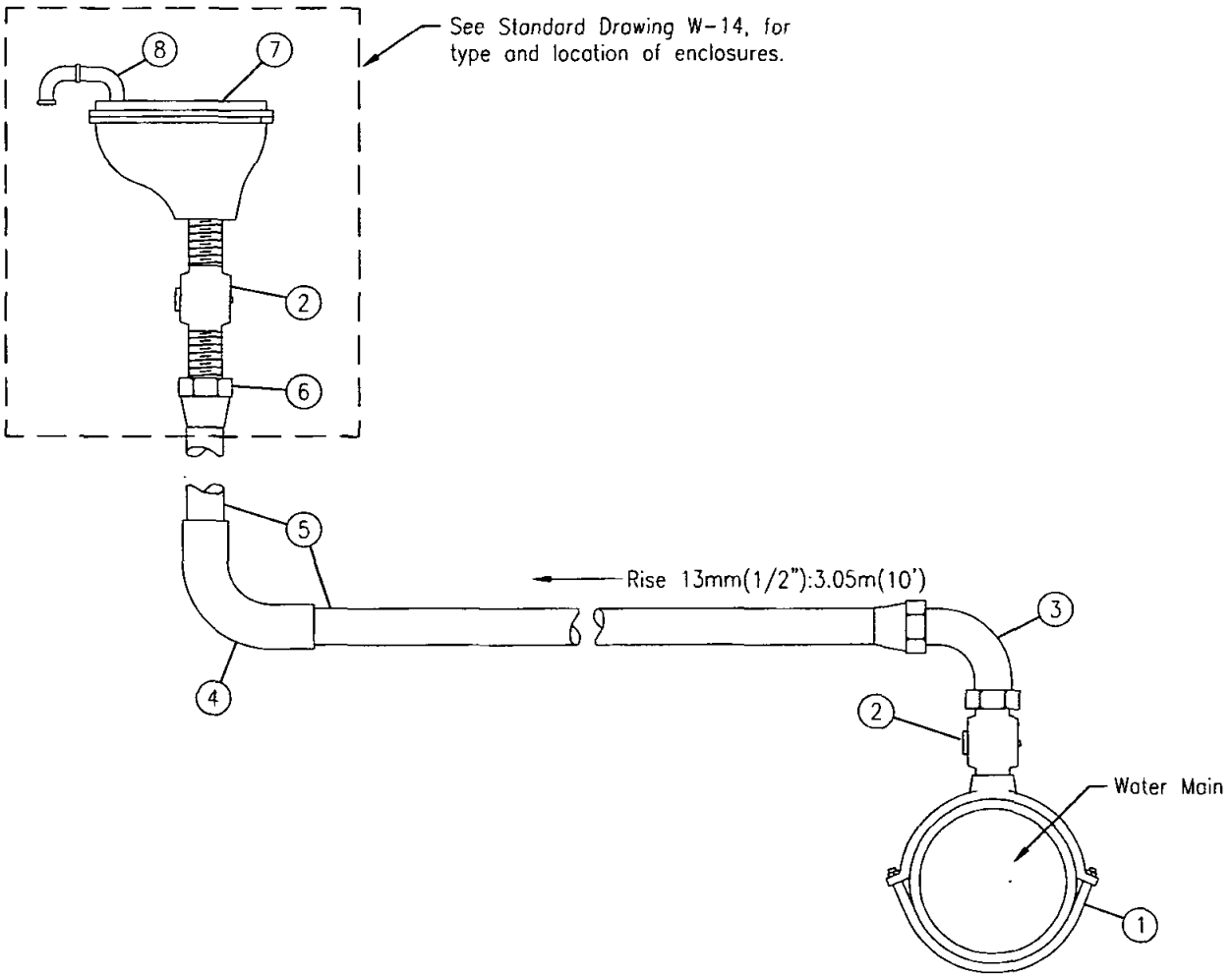

1. Double Strap Bronze Service Clamp. On steel mains use clamp or weld on coupling as required by Agency. Install insulating bushing as required by Agency.
2. Corporation Stop
3. Pipe x Tubing 90° Ell.
4. 90° Sweat Ell.
5. Copper Tubing.
6. Female Adapter.
7. Air and Vacuum Valve.
8. 2-90° Ell (not required in above metal ground enclosures).

LEGEND ON PLANS

Revision	By	Approved	Date
ORIGINAL		A.Kercheval	12/75
Add Metric		T. Stanton	03/03

SAN DIEGO REGIONAL STANDARD DRAWING

25mm (1") AND 51mm (2")
AIR AND VACUUM VALVES

RECOMMENDED BY THE SAN DIEGO REGIONAL STANDARDS COMMITTEE

T. Stanton 3/01/2003

Chairperson R.C.E. 19246 Date

DRAWING NUMBER W-4

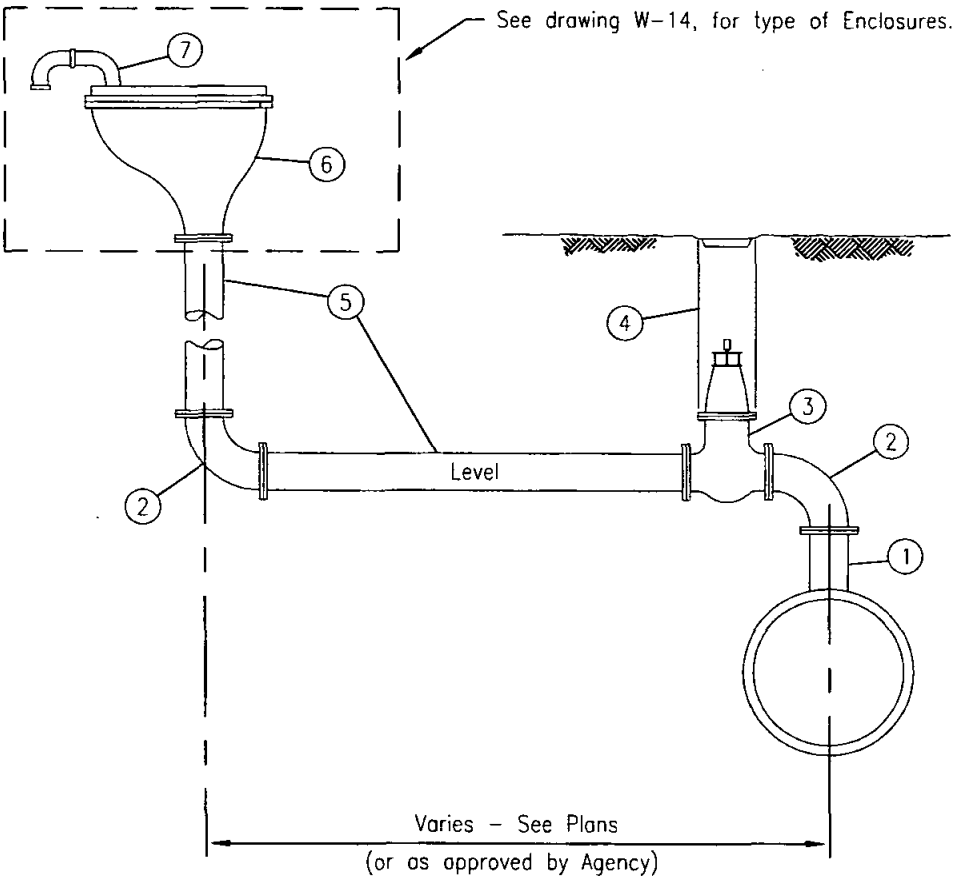

1. Flanged Outlet, Cement Lined and Coated Steel.
2. Flanged, 90° Ell, Cement Lined Coated Steel.
3. Valve
4. Valve Well and Cap (see Standard Drawing W-12).
5. Steel Pipe, Cement Lined and Coated.
6. Air and Vacuum Valve.
7. 2-90° Ell (not required in above metal ground enclosures).

LEGEND ON PLANS

Revision	By	Approved	Date
ORIGINAL		A.Kercheval	12/75
Add Metric		T. Stanton	03/03

SAN DIEGO REGIONAL STANDARD DRAWING

102mm (4") AND 152mm (6")
AIR AND VACUUM VALVES

RECOMMENDED BY THE SAN DIEGO REGIONAL STANDARDS COMMITTEE

T. Stanton 3/10/2003

Chairperson R.C.E. 19246 Date

DRAWING NUMBER W-5

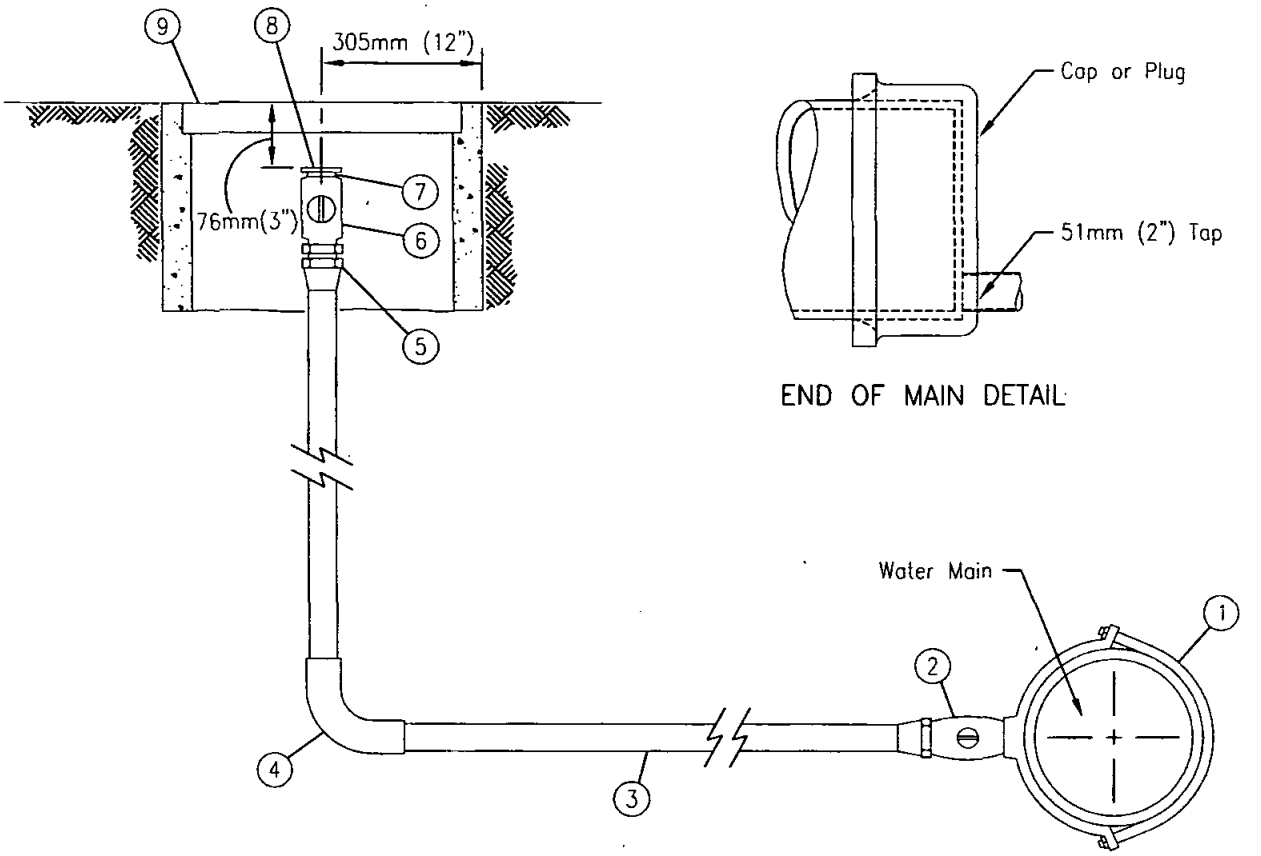

1. Bronze Service Clamp (double strap). On steel mains use clamp or weld on coupling as required by Agency. Install insulating bushing as required by Agency.
2. Bronze Corporation Stop (installed with key on side and open tap) and adaptor as required by Agency
3. Copper Tubing.
4. 90° Ell
5. Pipe to Tubing Adapter.
6. Ball Valve.
7. Brass 51mm (2") Iron Pipe Thread x 64mm (2-1/2") Hose Pipe Thread Adaptor.
8. 64mm (2-1/2") Hose Cap with chain, Brass.
9. Meter Box (see Standard Drawing W-15 for location).

LEGEND ON PLANS

Revision	By	Approved	Date
ORIGINAL		A.Kercheval	12/75
Add Metric		T. Stanton	03/03

SAN DIEGO REGIONAL STANDARD DRAWING

51mm(2") BLOW-OFF ASSEMBLY - TYPE A

RECOMMENDED BY THE SAN DIEGO REGIONAL STANDARDS COMMITTEE

T. Stanton 3/01/2003

Chairperson R.C.E. 19246 Date

DRAWING NUMBER W-6

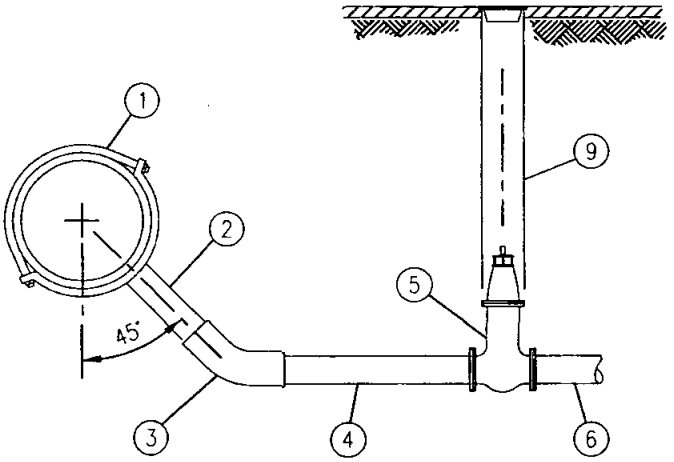

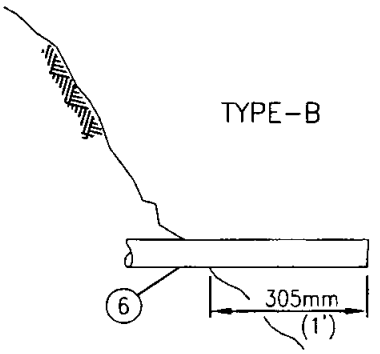

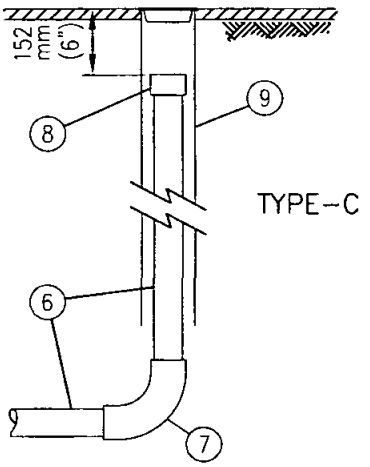

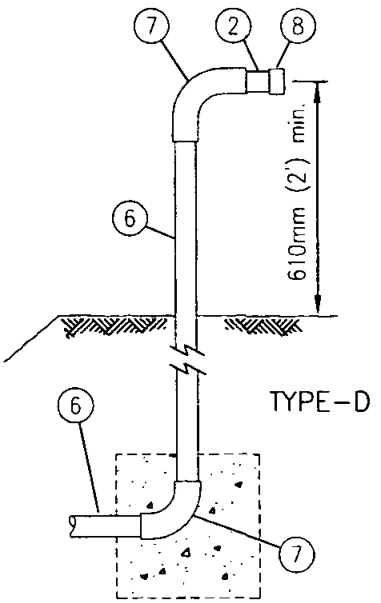

1. Bronze Service Clamp (double strap). On steel mains use coupling as required by Agency. Install insulating bushing as required by Agency.
2. 51mm (2") Nipple (51mm (2") x 76mm (3"))
3. 45° Ell
4. 51mm (2") Nipple (51mm (2") x 152mm (6"))
5. 51mm (2") Valve.
6. 51mm (2") Pipe
7. 90° Ell
8. 51mm (2") Threaded Cap.
9. Valve Well Installation, See Standard Drawing W-12.

NOTES

1. Type of installation and materials to be specified by Agency.
2. See Standard Drawing W-6 for end of main detail.

LEGEND ON PLANS

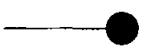

Revision	By	Approved	Date
ORIGINAL		A.Kercheval	12/75
Add Metric		T. Stanton	03/03

SAN DIEGO REGIONAL STANDARD DRAWING

51mm (2") BLOW-OFF ASSEMBLIES
TYPES B, C AND D

RECOMMENDED BY THE SAN DIEGO REGIONAL STANDARDS COMMITTEE

T. Stanton 3/10/2003

Chairperson R.C.E. 19246 Date

DRAWING NUMBER W-7

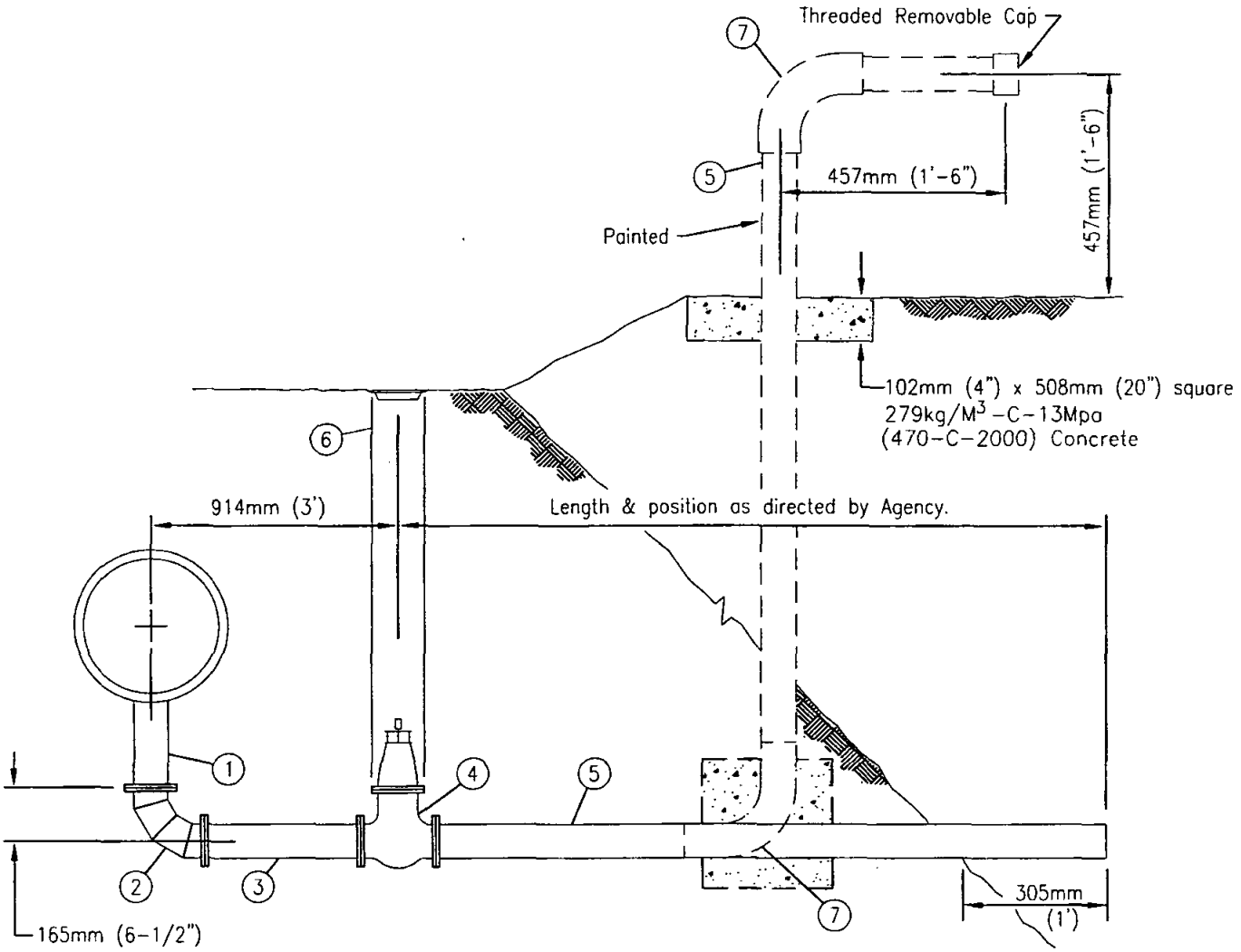

1. Flanged Tee or Welded Saddle.
2. Short Radius 90° Flanged Bend, Cement Lined and Coated.
3. Steel Pipe, Cement Lined and Coated.
4. Flanged Valve.
5. Steel Pipe (or P.V.C. Schedule 80 Pipe Where Permitted by Agency).
6. Valve Well (See Standard Drawing W-12).
7. 90° Bend (Same Material as Item 5).

LEGEND ON PLANS

Revision	By	Approved	Date
ORIGINAL		A.Kercheval	12/75
Add Metric		T. Stanton	03/03

SAN DIEGO REGIONAL STANDARD DRAWING

102mm (4") AND 152mm (6")
BLOW-OFF ASSEMBLIES TYPE A

RECOMMENDED BY THE SAN DIEGO REGIONAL STANDARDS COMMITTEE

T. Stanton 3/10/2003

Chairperson R.C.E. 19246 Date

DRAWING NUMBER W-8

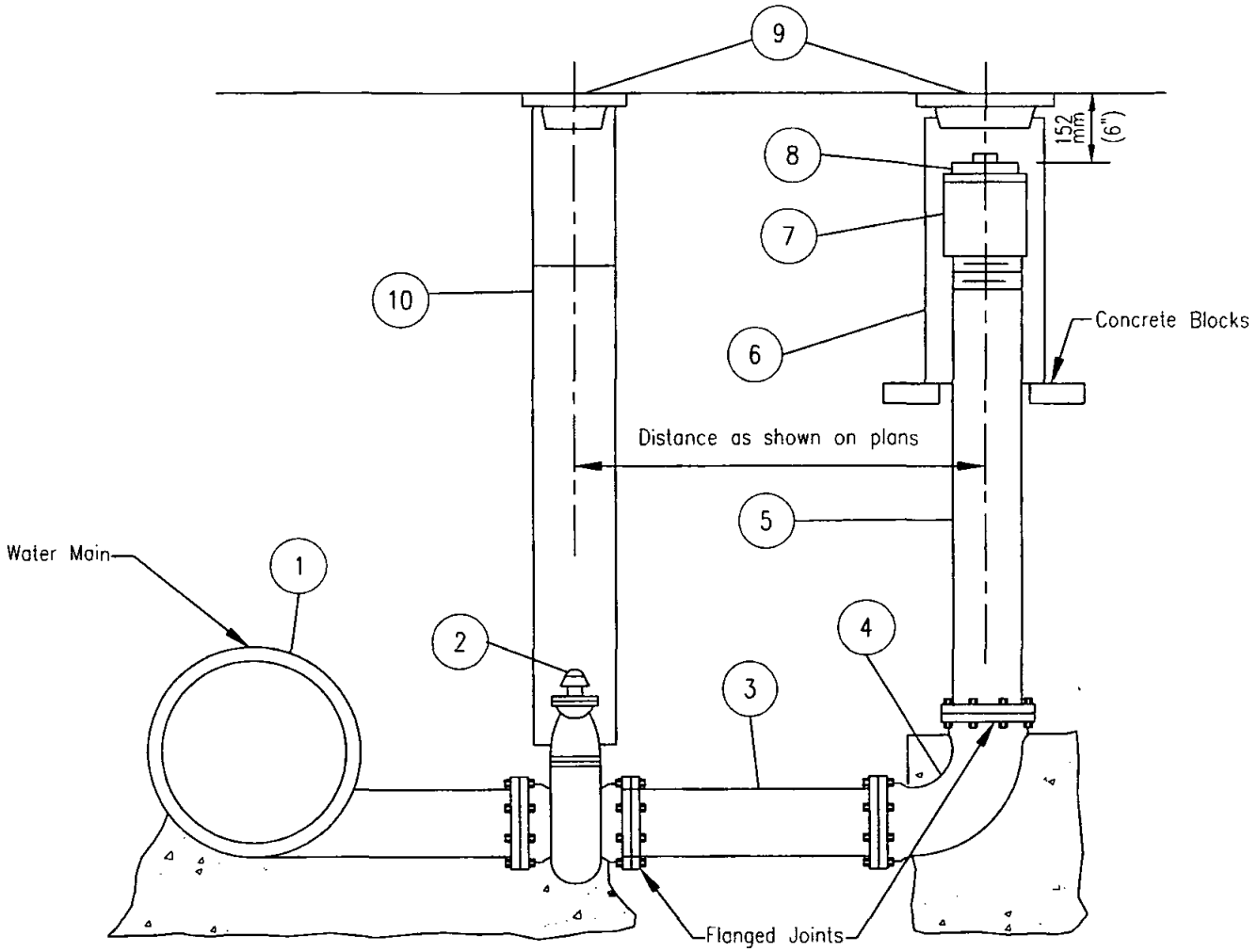

1. Main Size x Flanged Outlet, cement lined and coated.
2. Flanged Gate Valve (F x RT for A.C. Pipe).
3. Cast Iron Pipe or A.C. Pipe (1.98m (6 1/2') min for A.C. Pipe).
4. F x F 90° Bend (F x RT for A.C. Pipe).
5. Galvanized Iron Pipe, threaded and flanged.
6. 254mm (10") Class 200 A.C. Pipe Gate Well.
7. Galvanized Iron Coupling, threaded.
8. Galvanized Iron Plug.
9. Gate Well Cap with 102mm (4") skirt.
10. Valve Well (see Standard Drawing W-12).

LEGEND ON PLANS

Revision	By	Approved	Date
ORIGINAL		A.Kercheval	12/75
Add Metric		T. Stanton	03/03

SAN DIEGO REGIONAL STANDARD DRAWING

102mm (4") AND 152mm (6")
BLOW-OFF ASSEMBLIES TYPE B

RECOMMENDED BY THE SAN DIEGO REGIONAL STANDARDS COMMITTEE

T. Stanton 3/10/2003

Chairperson R.C.E. 19246 Date

DRAWING NUMBER W-9

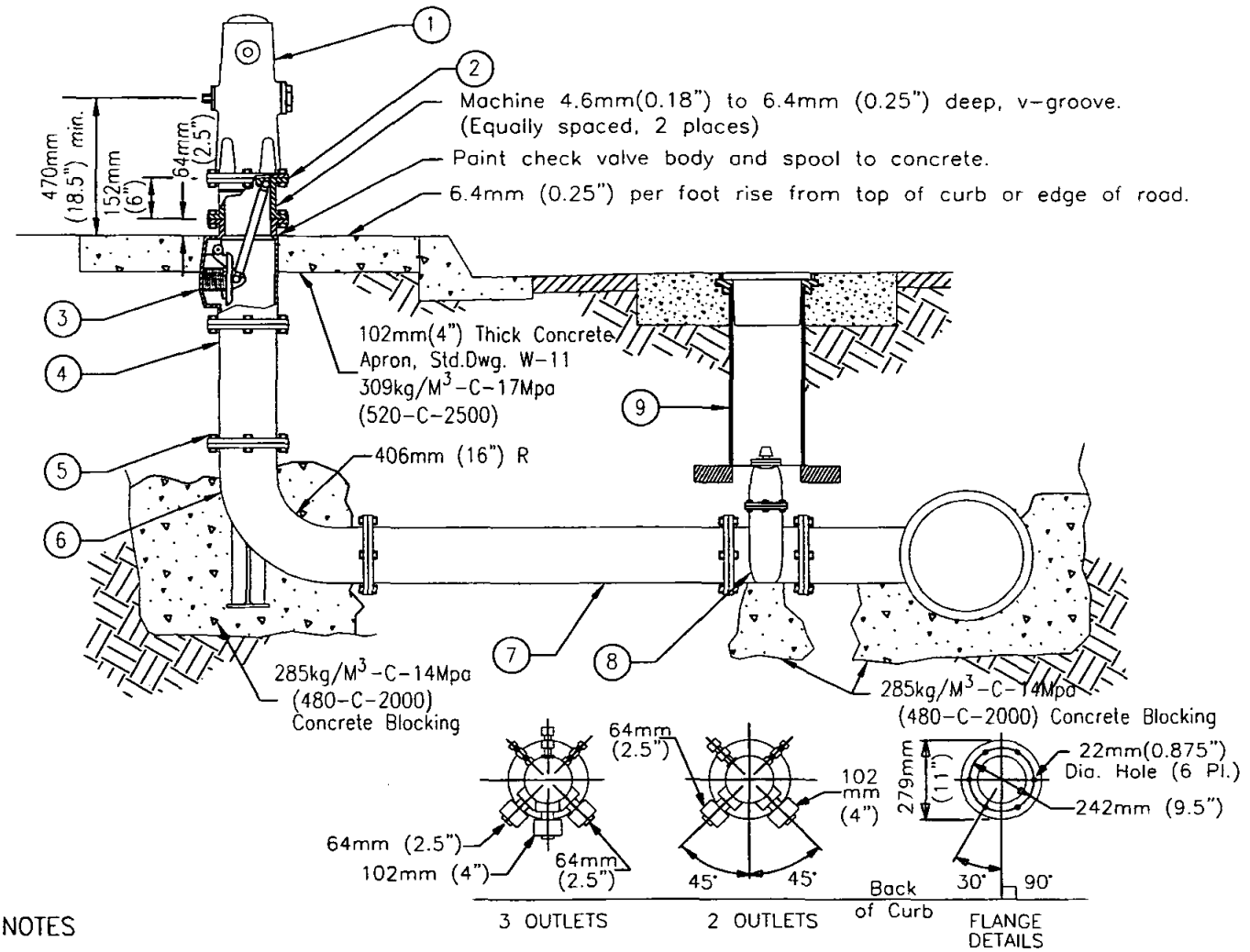

NOTES

1. Items (4) & (7) may be cement lined and coated steel pipe where permitted.
2. Extension Spool callouts (3) & (4) maybe combined as one spool.

(1) Fire Hydrant

(2) 152mm (6") Extension Spool (Double Machine Grooved)

(3) Break-Off Check Valve Body or Extension Spool as required by agency or shown on plans

(4) Extension spool

(5) 19mm (.75") X 76mm (3") Hex Head Machine Bolts and Nuts (Typical)

(6) Hydrant Ell

(7) Polyvinyl Chloride (PVC) or Ductile Iron (DI) Pipe

(8) Valve with Concrete Support, Std. Dwg. W-19 (Type A)

(9) Valve Well and Cover, Std. Dwgs. W-12A & W-12B

(10) See Std. Dwg. W-11 for fire hydrant locations and M-19 for fire hydrant marker location as required by agency.

LEGEND ON PLANS

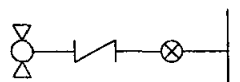

WITH CHECK VALVE

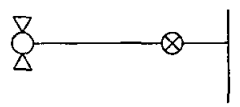

WITHOUT CHECK VALVE

Revision	By	Approved	Date
ORIGINAL		R. Munoz	3/97
Add Metric		T. Stanton	03/03

SAN DIEGO REGIONAL STANDARD DRAWING

FIRE HYDRANT INSTALLATION

RECOMMENDED BY THE SAN DIEGO REGIONAL STANDARDS COMMITTEE

T. Stanton 3/01/2003

Chairperson R.C.E. 19246 Date

DRAWING NUMBER W-10

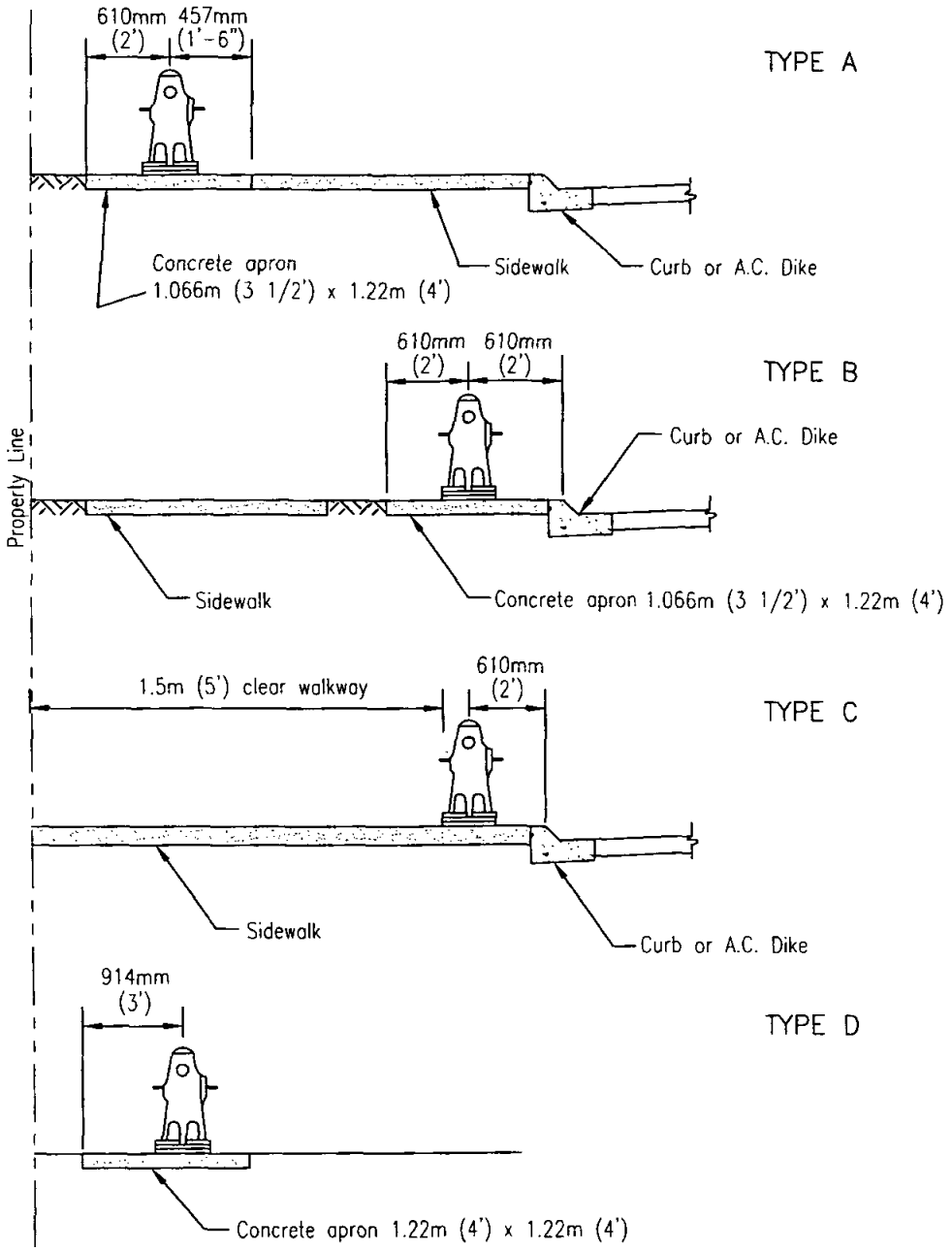

NOTES

1. Apron, where required by Agency, shall be 4" thick 309kg/M^3-C-17Mpa (520-C-2500) concrete.
2. When distance from hydrant to the top or toe of slope is less than 610mm (2'), special hydrant installation will be required by Agency.
3. Where hydrant is not protected by a vertical face of curb, protective posts are required. See Standard Drawing W-16 for details.
4. The centerline of the hydrant shall be located 1.5m (5') minimum from curb return and minimum 1.066m (3'-6") from driveway, pedestrian ramp or any fixed obstruction.

Revision	By	Approved	Date	SAN DIEGO REGIONAL STANDARD DRAWING	RECOMMENDED BY THE SAN DIEGO REGIONAL STANDARDS COMMITTEE
ORIGINAL		A.Kercheval	12/75		
Add Metric		T. Stanton	03/03	FIRE HYDRANT LOCATIONS	Chairperson R.C.E. 19246 Date 3/01/2003
					DRAWING NUMBER W-11

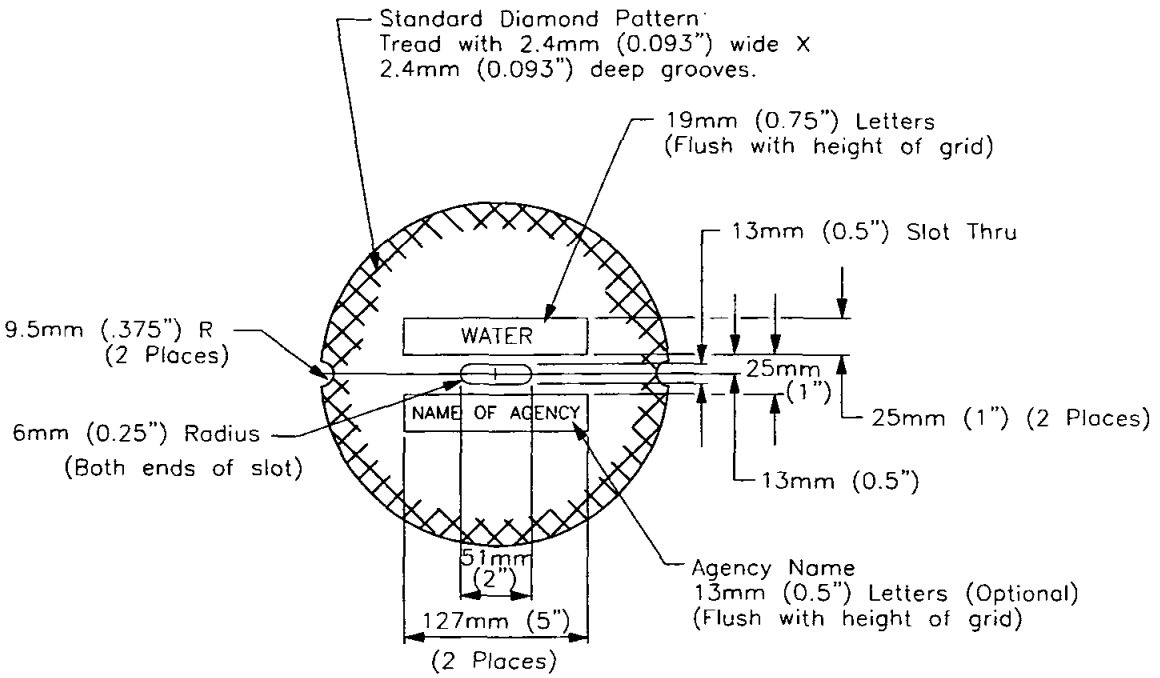

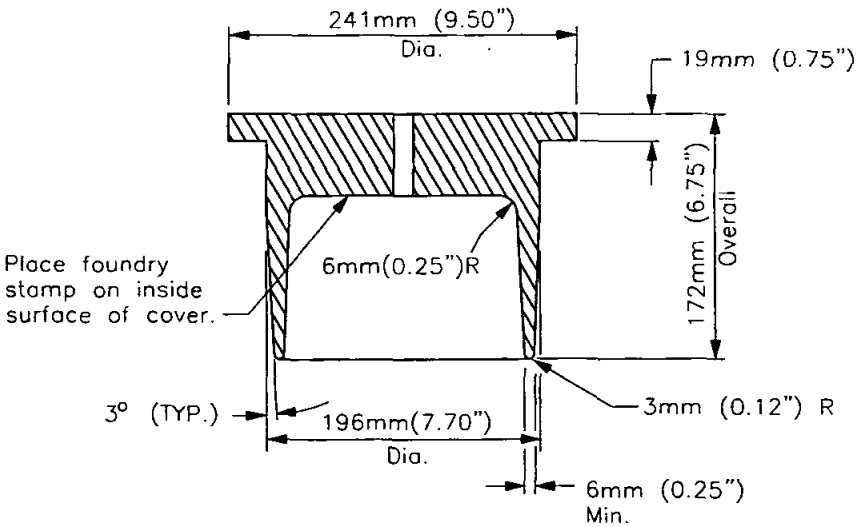

CAST IRON
VALVE WELL COVER
(18.4kg (40 lbs.) min.)

VALVE WELL COVER PAINT CHART			
VALVE CONDITION	BUTTERFLY VALVES	GATE VALVES	BLOW-OFF VALVES
PERMANENTLY CLOSED	RED	RED	-
TEMPORARILY CLOSED	YELLOW w/RED DOT	WHITE w/RED DOT	ALUMINUM
PERMANENTLY OPEN	YELLOW	WHITE	-

Revision	By	Approved	Date
ORIGINAL		G.Parkinson	2/95
Add Metric			11/02

SAN DIEGO REGIONAL STANDARD DRAWING

VALVE WELL COVER

RECOMMENDED BY THE SAN DIEGO REGIONAL STANDARDS COMMITTEE

3/01/2003

Chairperson R.C.E. 19246 Date

DRAWING NUMBER W-12A

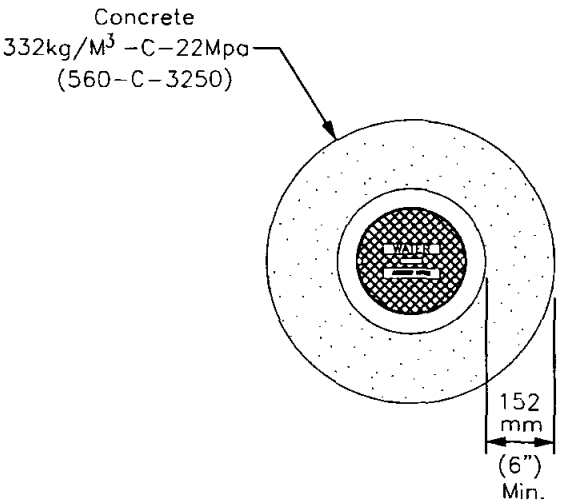

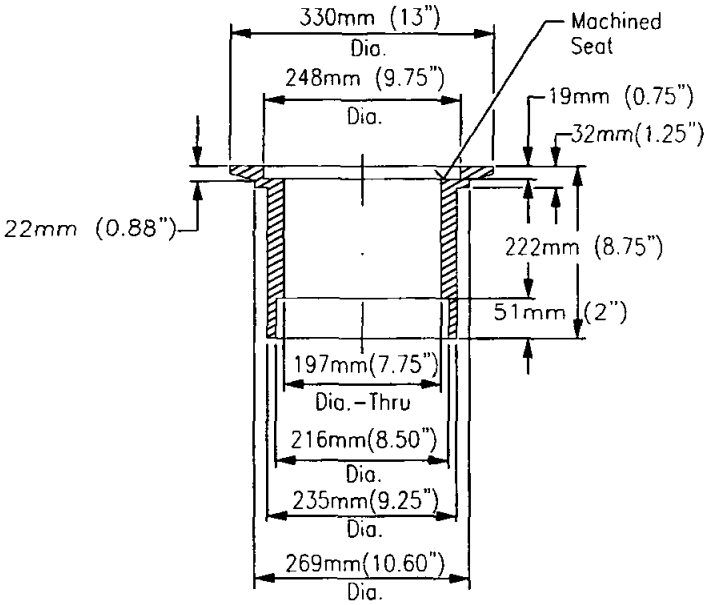

CAST IRON
VALVE WELL FRAME

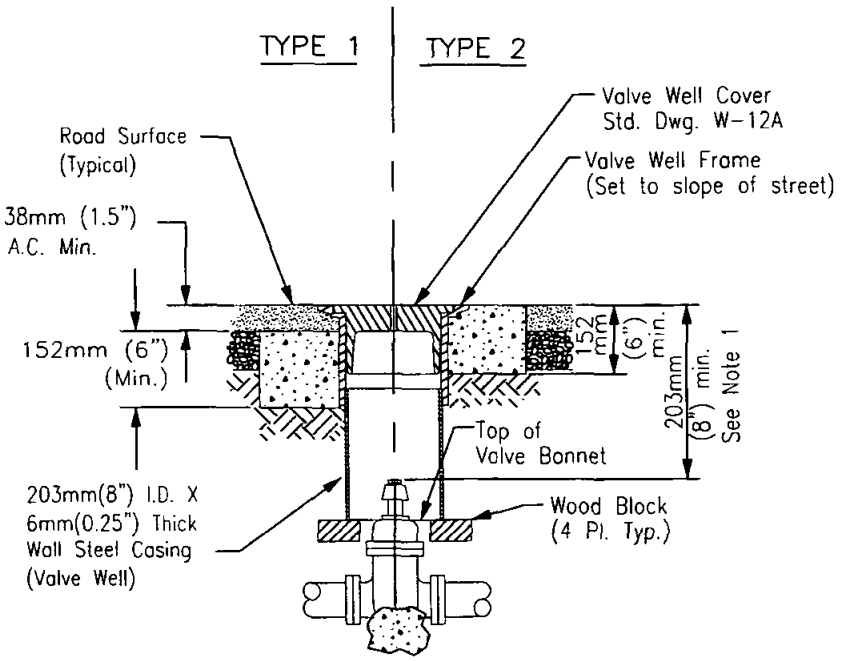

VALVE WELL AND FRAME
For New Installations

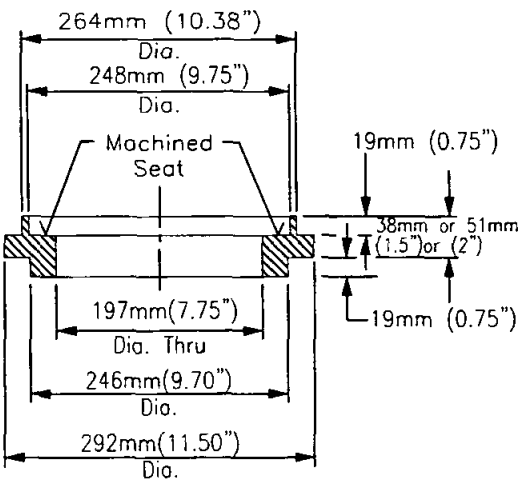

CAST IRON RISER RING
For Retrofitting and
Overlay Projects

NOTES

1. Provide valve key extension for all butteryfly valves. For gate valves, provide valve key extension where this dimension exceeds 635mm (25").
2. The surface of the valve well cover shall match the street cross slope and profile.
3. See Standard Drawing W-13 for valve stem extension when required by agency.

Revision	By	Approved	Date
ORIGINAL		G.Parkinson	2/95
Add Metric		T. Stanton	03/03

SAN DIEGO REGIONAL STANDARD DRAWING

VALVE WELL FRAME
AND ASSEMBLY

RECOMMENDED BY THE SAN DIEGO REGIONAL STANDARDS COMMITTEE

3/10/2003

Chairperson R.C.E. 19246 Date

DRAWING NUMBER W-12B

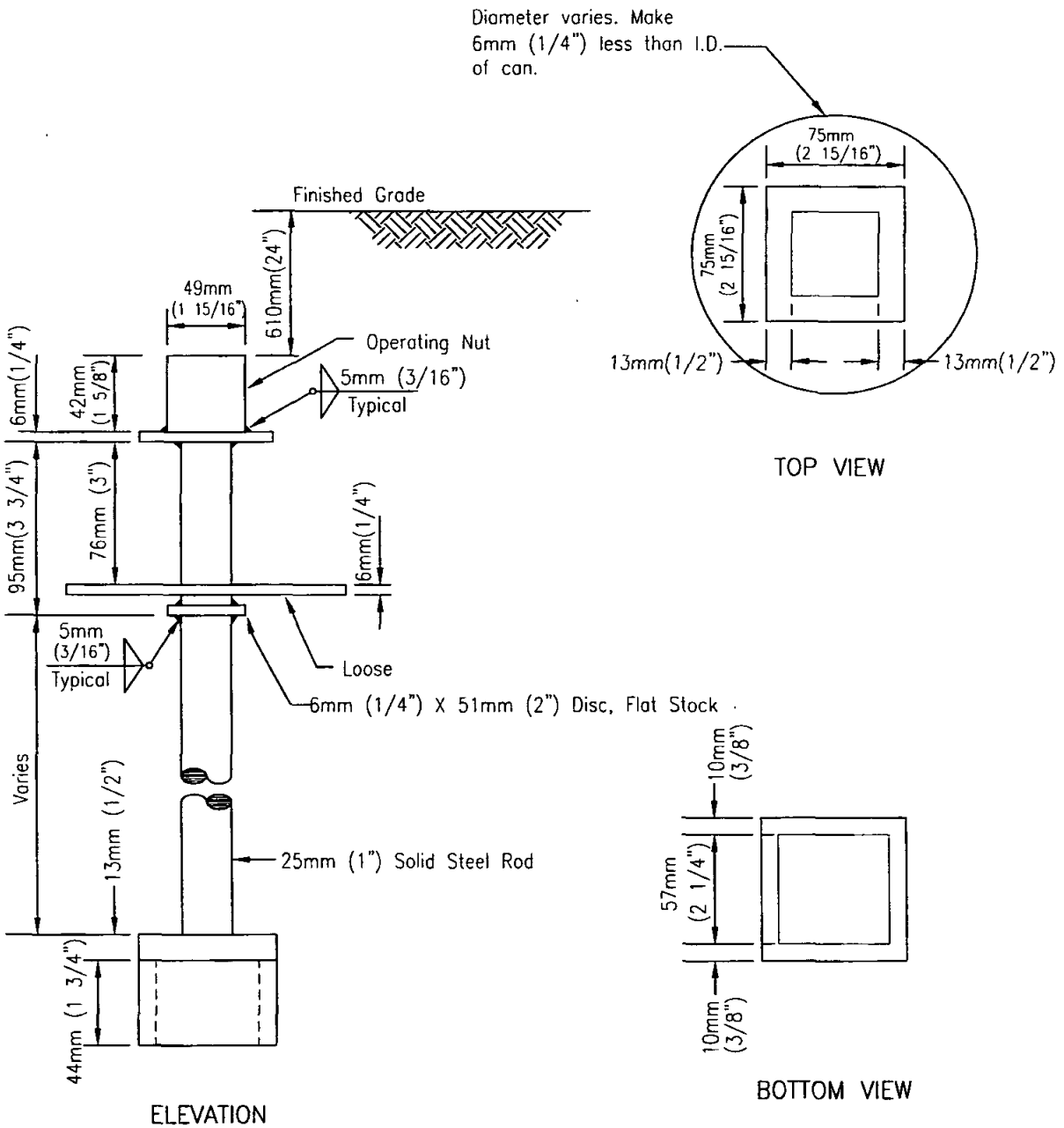

NOTES

1. Extension to be used when top of operating nut is 1.5m (5') or more below finish grade.
2. Paint all finished surfaces with asphalt varnish.

Revision	By	Approved	Date
ORIGINAL		G.Parkinson	5/92
Add Metric		T. Stanton	03/03

SAN DIEGO REGIONAL STANDARD DRAWING

VALVE STEM EXTENSION

RECOMMENDED BY THE SAN DIEGO REGIONAL STANDARDS COMMITTEE

T. Stanton 3/01/2003

Chairperson R.C.E. 19246 Date

DRAWING NUMBER W-13

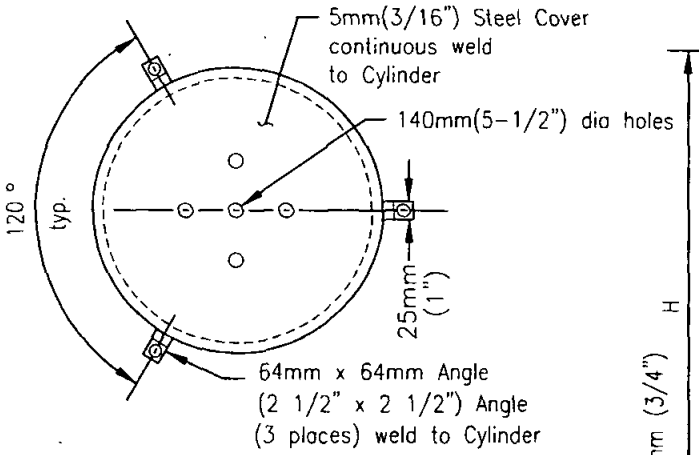

PLAN

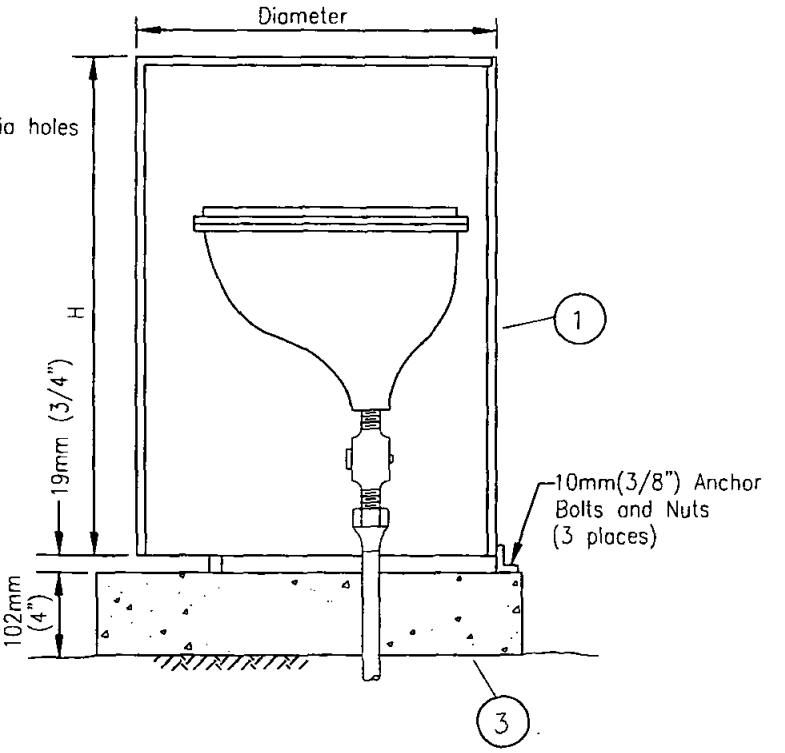

Valve Size	Dia	H
25mm & 51mm	356 mm	610 mm
102mm	356 mm	762 mm
152mm	406 mm	914 mm

Valve Size	Dia	H
(1"& 2")	(14")	(24")
(4")	(14")	(30")
(6")	(16")	(36")

TYPE A

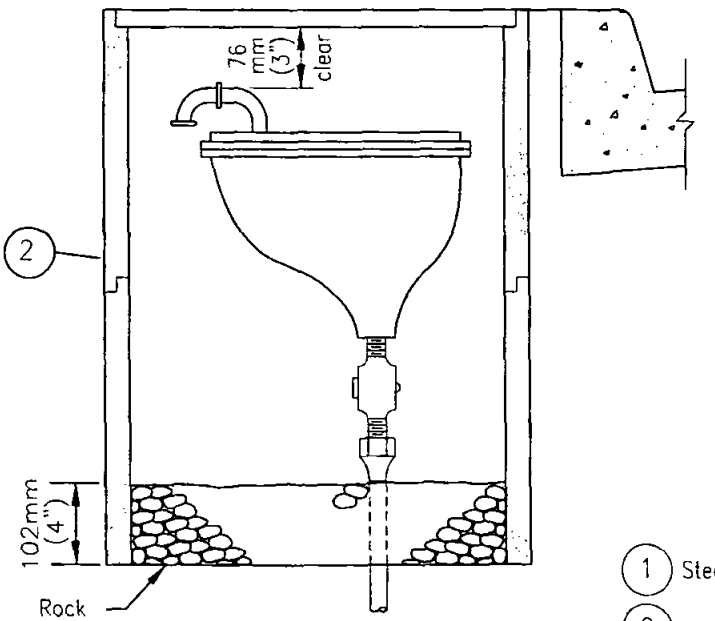

TYPE B

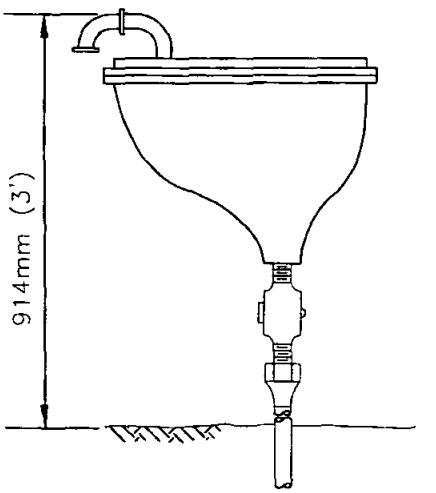

TYPE C

1. Steel enclosure, paint as specified by Agency.
2. Meter box, see Standard Drawing W-15 for location.
3. 610mm (2') x 610mm (2') pad, 279kg/M^3-C-13Mpa (470-C-2000) Concrete

Revision	By	Approved	Date
ORIGINAL		A.Kercheval	12/75
Add Metric		T. Stanton	03/03

SAN DIEGO REGIONAL STANDARD DRAWING

AIR AND VACUUM VALVE ENCLOSURES

RECOMMENDED BY THE SAN DIEGO REGIONAL STANDARDS COMMITTEE

T. Stanton 3/01/2003

Chairperson R.C.E. 19246 Date

DRAWING NUMBER W-14

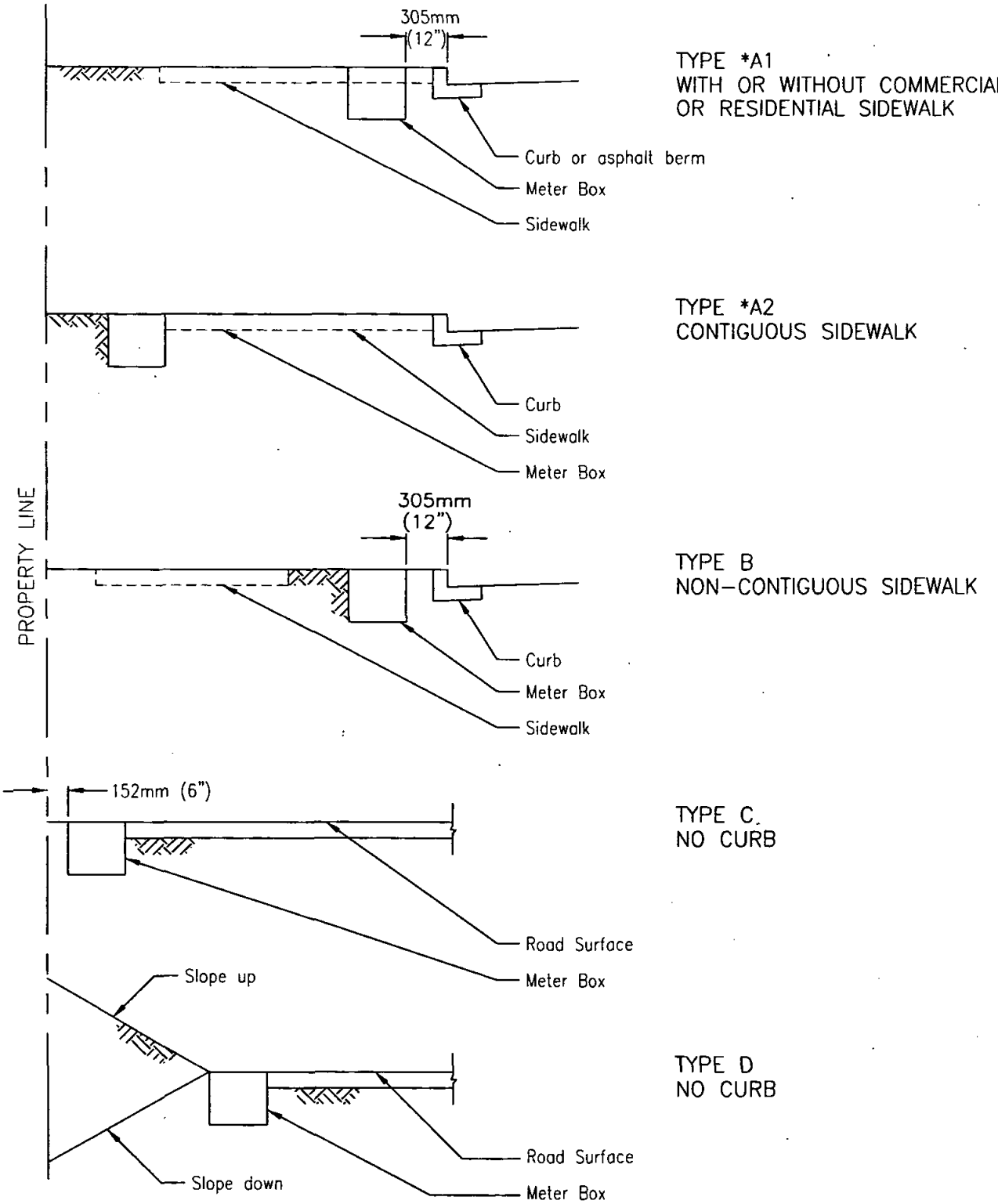

* Agency to determine alternate

NOTE:

Meter boxes shall not be located within driveways.

Revision	By	Approved	Date
ORIGINAL		A.Kercheval	12/75
Add Metric		T. Stanton	03/03

SAN DIEGO REGIONAL STANDARD DRAWING

WATER METER LOCATIONS

RECOMMENDED BY THE SAN DIEGO REGIONAL STANDARDS COMMITTEE

T. Stanton 3/10/2003

Chairperson R.C.E. 19246 Date

DRAWING NUMBER W-15

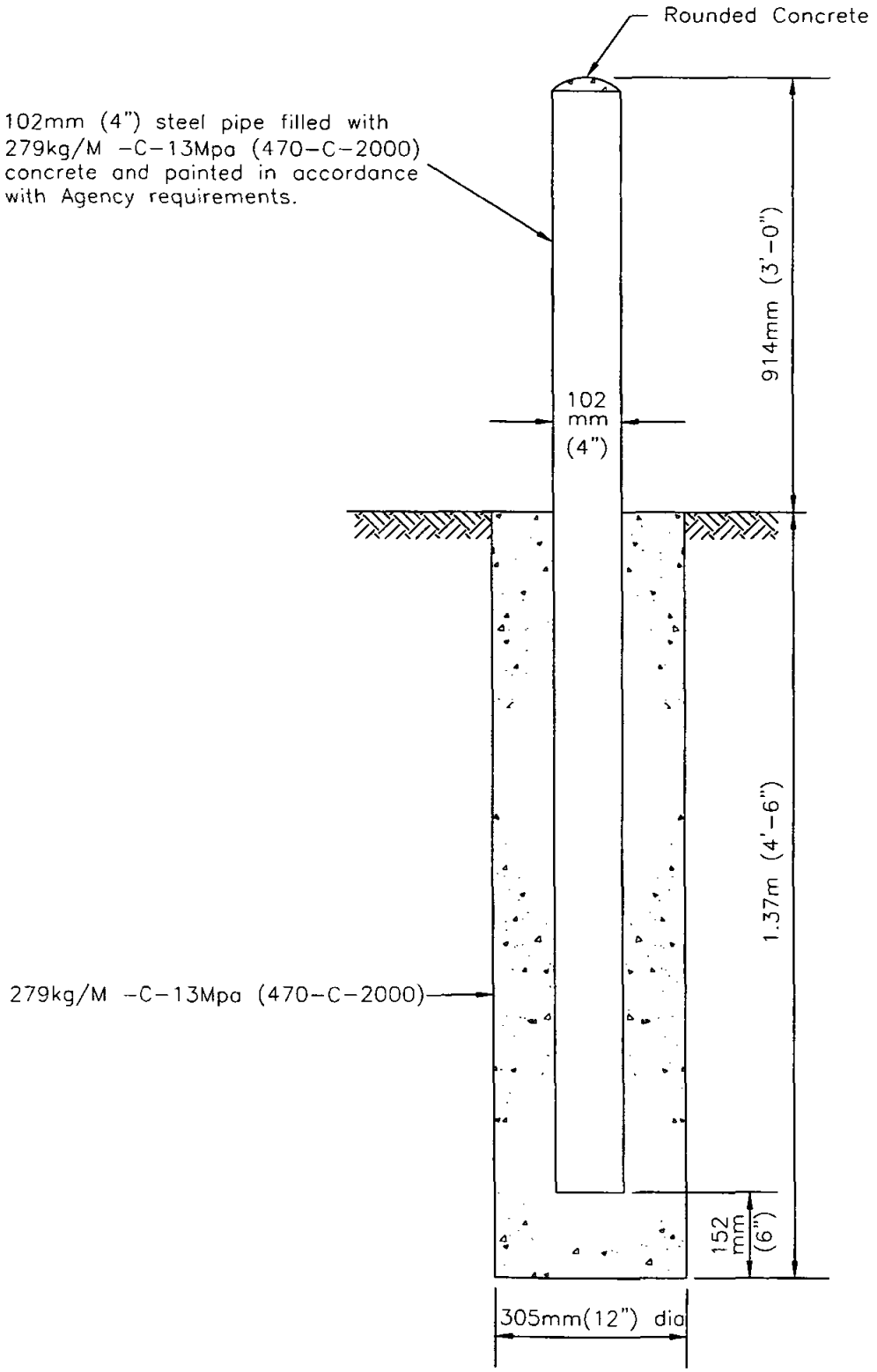

Revision	By	Approved	Date
ORIGINAL		A.Kercheval	12/75
Add Metric		T. Stanton	03/03

SAN DIEGO REGIONAL STANDARD DRAWING

PROTECTION POST

RECOMMENDED BY THE SAN DIEGO REGIONAL STANDARDS COMMITTEE

T. Stanton 3/10/2003

Chairperson R.C.E. 19246 Date

DRAWING NUMBER W-16

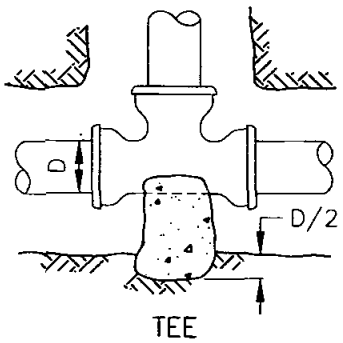

TEE

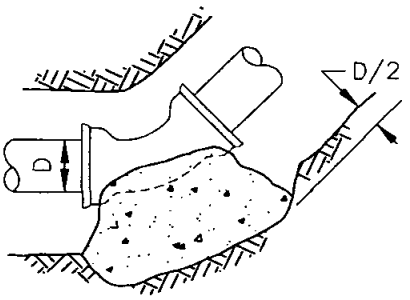

HORIZONTAL OR
VERTICAL BEND

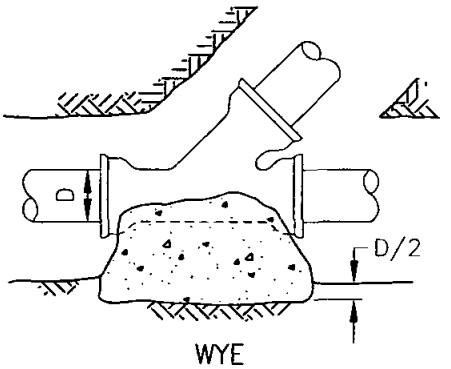

WYE

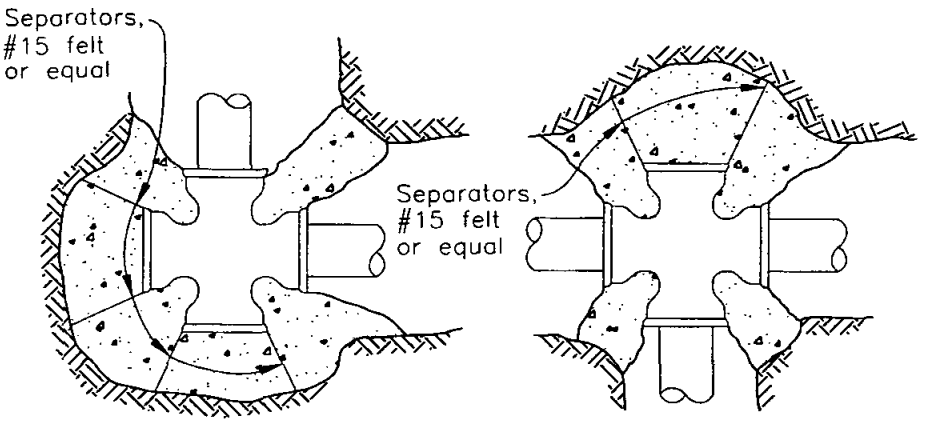

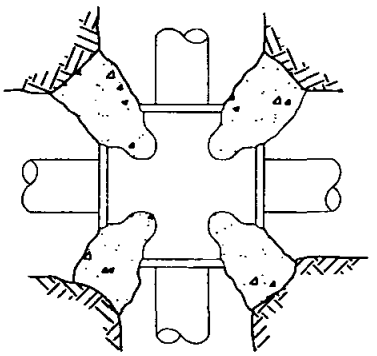

CROSS BLOCKING

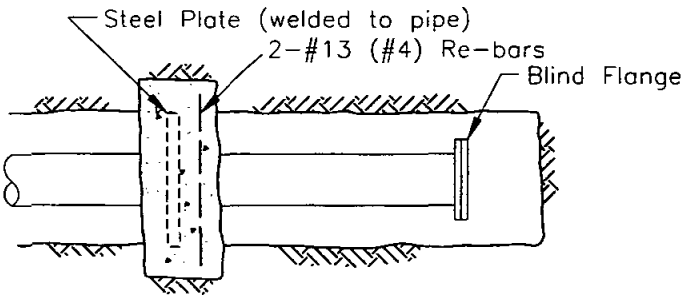

STEEL PIPE
PLAN

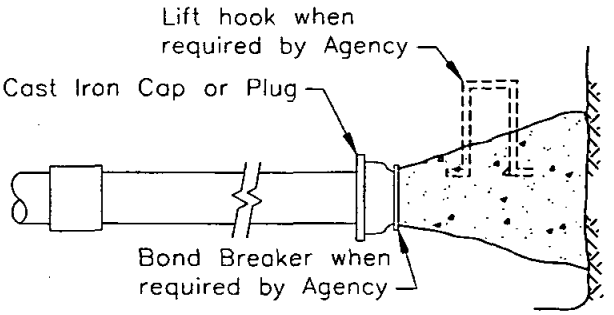

A.C. PIPE
ELEVATION

DEAD END BLOCKING

NOTES

1. Concrete shall be 279kg/M^3-C-13Mpa (470-C-2000).
2. See Standard Drawing W-18 for bearing areas.

Revision	By	Approved	Date
ORIGINAL		A.Kercheval	12/75
Add Metric		T. Stanton	03/03

SAN DIEGO REGIONAL STANDARD DRAWING

CONCRETE THRUST BLOCKS

RECOMMENDED BY THE SAN DIEGO REGIONAL STANDARDS COMMITTEE

T. Stanton 3/01/2003

Chairperson R.C.E. 19246 Date

DRAWING NUMBER W-17

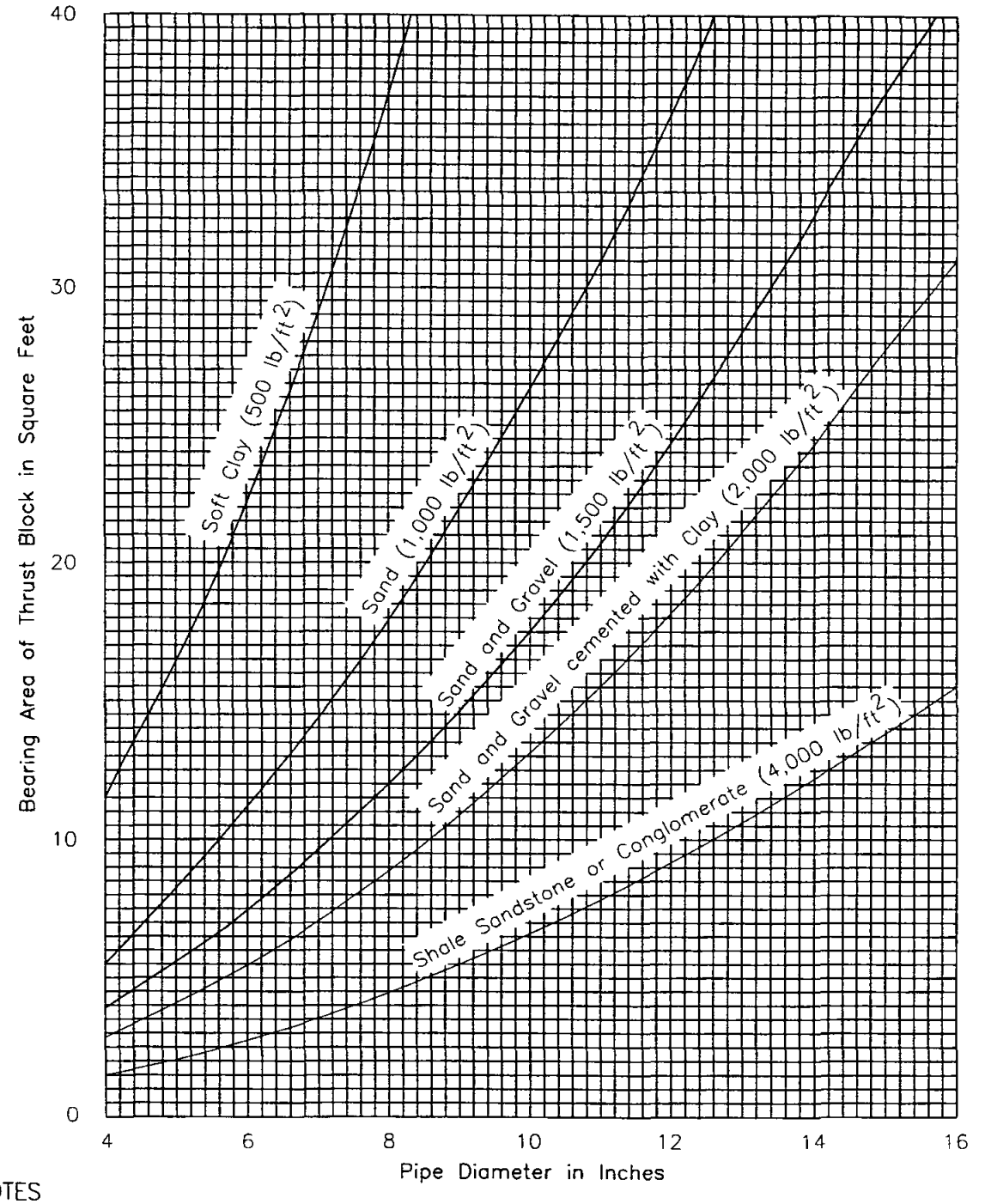

NOTES

1. Based on 225 psi test pressure and bearing values of dry soils.
2. Values from curves are for tees and dead ends, i.e.; straight line thrust.
   For 90° bend: 1.4 value from curve.
   For 45° bend: 0.8 value from curve.
   For 22 1/2° bend: 0.4 value from curve.
3. For conditions not covered by curves, special thrust blocks must be computed and approved.

Revision	By	Approved	Date
ORIGINAL		A.Kercheval	12/75
Add Metric		T. Stanton	03/03

SAN DIEGO REGIONAL STANDARD DRAWING

THRUST BLOCK BEARING AREAS

RECOMMENDED BY THE SAN DIEGO REGIONAL STANDARDS COMMITTEE

T. Stanton 3/10/2003

Chairperson R.C.E. 19246 Date

DRAWING NUMBER W-18

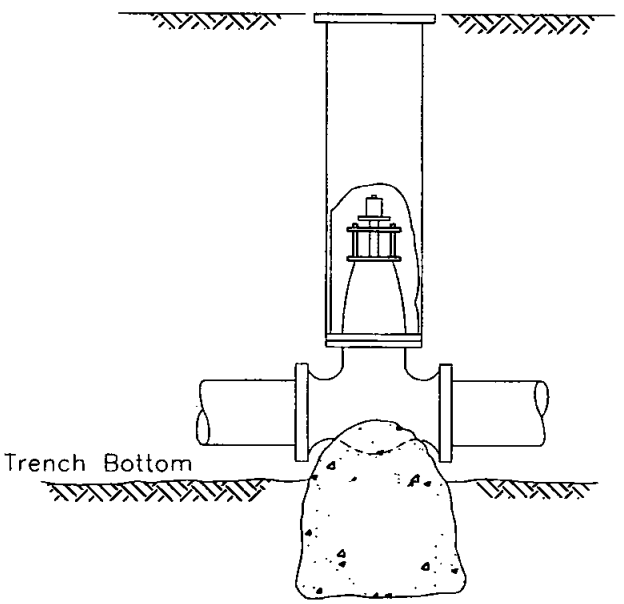

TYPE–A SUPPORT BLOCK

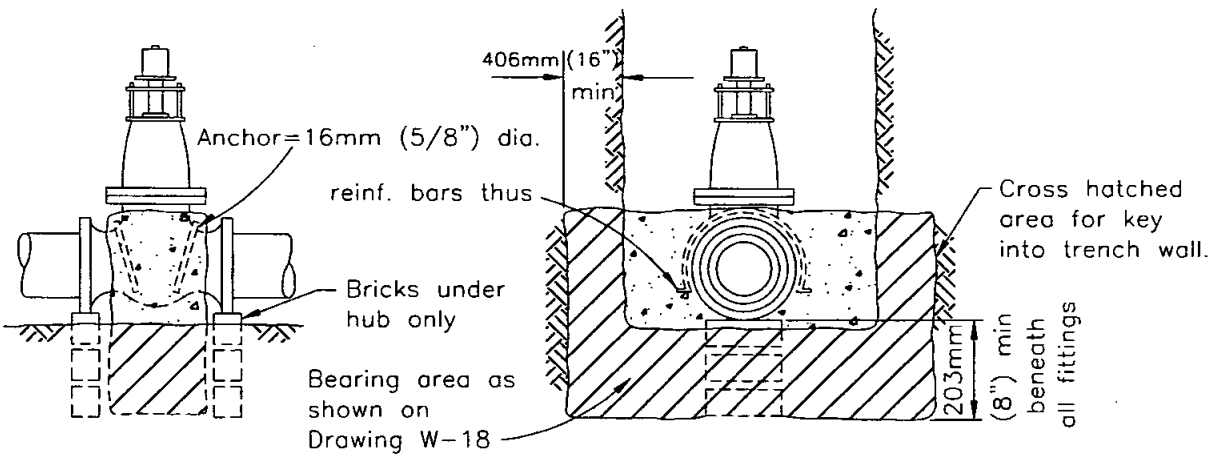

TYPE–B THRUST BLOCK

NOTE

Concrete shall be 279kg/M^3–C–13Mpa (470–C–2000).

Revision	By	Approved	Date
ORIGINAL		A.Kercheval	12/75
Add Metric		T. Stanton	03/03

SAN DIEGO REGIONAL STANDARD DRAWING

CONCRETE VALVE BLOCKING

RECOMMENDED BY THE SAN DIEGO REGIONAL STANDARDS COMMITTEE

T. Stanton 3/01/2003

Chairperson R.C.E. 19246 Date

DRAWING NUMBER W–19

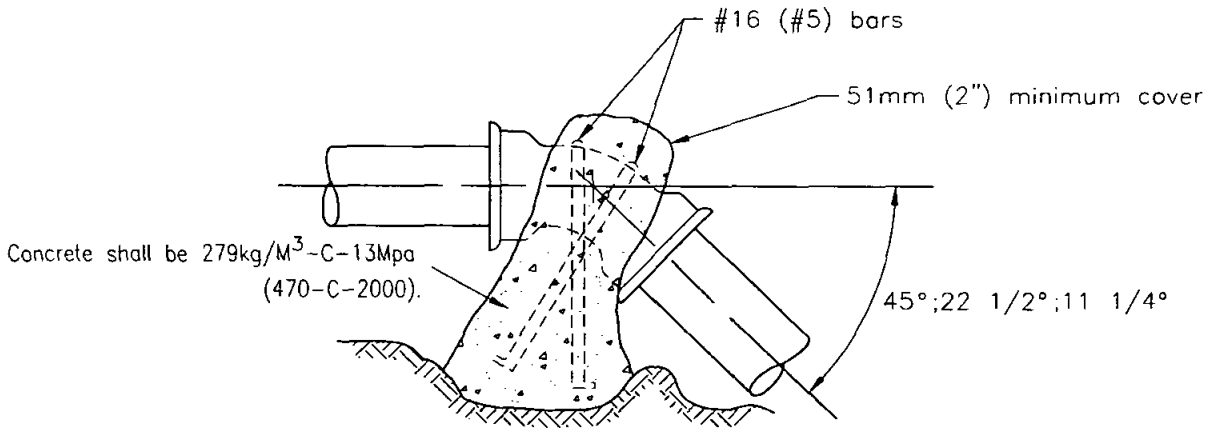

Pipe Nominal Dia	Cubic Ft. Of Concrete Required per 100 P.S.I. Pressure*		
	45°	22 1/2°	11 1/4°
4	7	4	2
6	15	8	4
8	27	14	7
10	* *	21	11
12	* *	* *	16

* Increase volumes shown in proportion to pressures existing when pressure testing pipeline.

* * Special design required.

Revision	By	Approved	Date
ORIGINAL		A.Kercheval	12/75
Add Metric		T. Stanton	03/03

SAN DIEGO REGIONAL STANDARD DRAWING

ANCHOR BLOCK
(VERTICAL BEND ONLY)

RECOMMENDED BY THE SAN DIEGO REGIONAL STANDARDS COMMITTEE

T. Stanton 3/10/2003

Chairperson R.C.E. 19246 Date

DRAWING NUMBER W-20

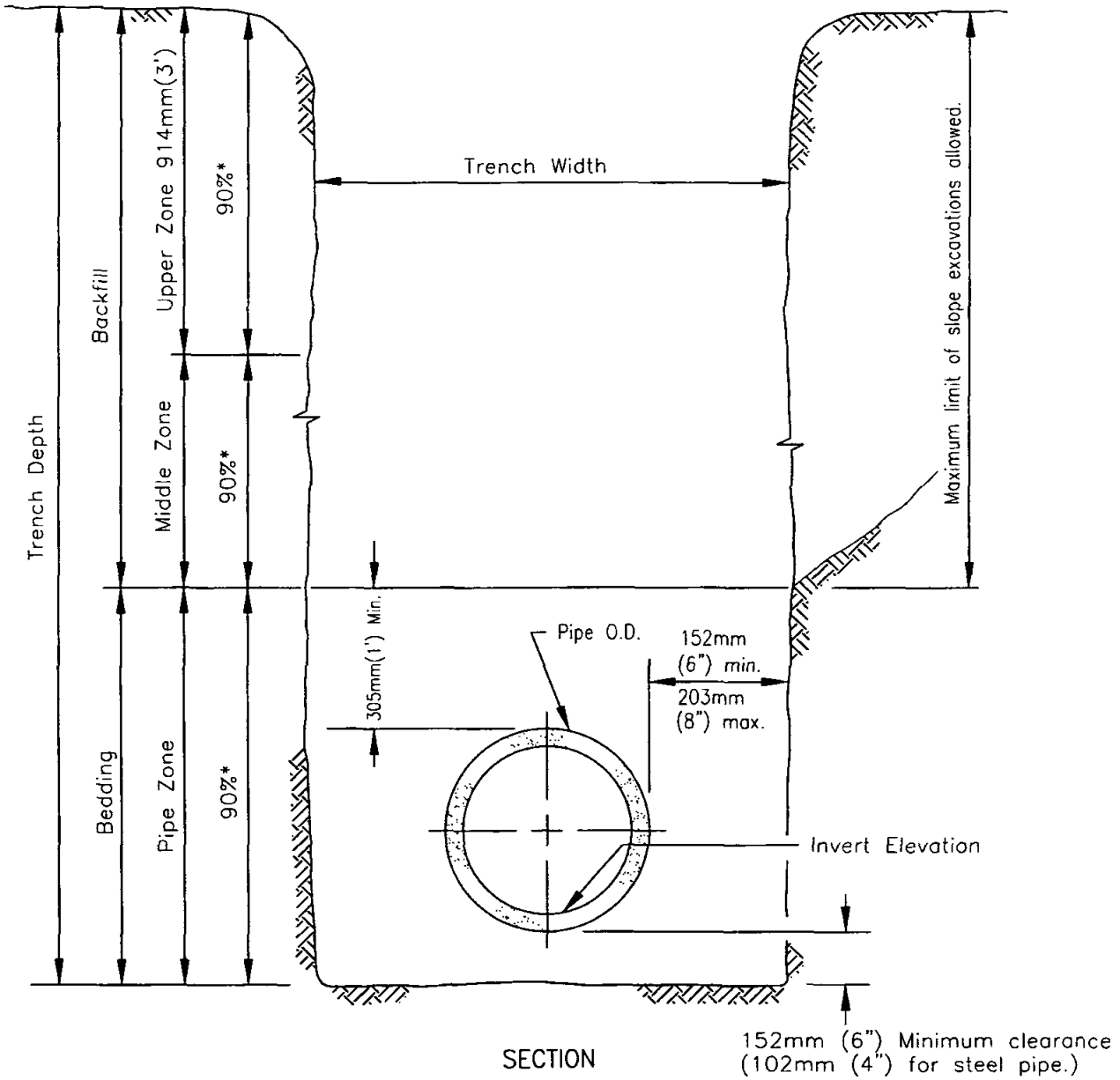

SECTION

NOTES

1. For trenching on improved streets see standard drawing G-24 or G-25 for resurfacing details.
2. (*) *indicates minimum relative compaction.*
3. Bedding material shall either be sand, gravel, crushed aggregate or native free draining granular material having a sand equivalent (SE) of not less than (50) and an expansion coefficient, when saturated with water, of not more than 0.5 of one percent (0.5%).

Revision	By	Approved	Date
ORIGINAL		A.Kercheval	12/75
Add Metric		T. Stanton	03/03

SAN DIEGO REGIONAL STANDARD DRAWING

PIPE BEDDING AND TRENCH BACKFILL FOR WATER MAINS

RECOMMENDED BY THE SAN DIEGO REGIONAL STANDARDS COMMITTEE

T. Stanton 3/10/2003

Chairperson R.C.E. 19246 Date

DRAWING NUMBER W-21

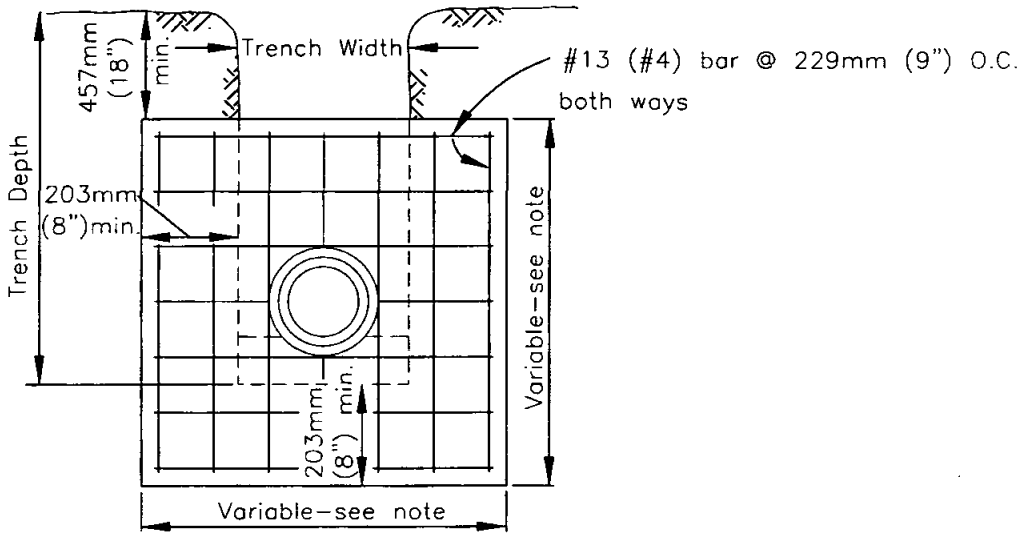

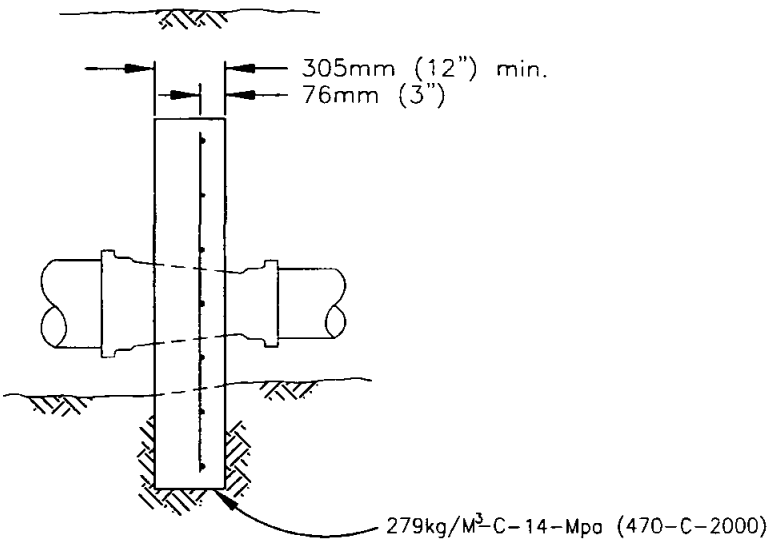

NOTE

Bearing area shall be the difference between the bearing areas required for thrust anchorage of mains on each side of reducer as found from Standard Drawing W-18, plus the area of the trench opening, except that minimum dimensions shown shall be adhered to.

Revision	By	Approved	Date
ORIGINAL		D. Solomon	7/79
Add Metric		T. Stanton	03/03

SAN DIEGO REGIONAL STANDARD DRAWING

THRUST ANCHOR FOR WATER MAIN REDUCER – 4" THRU 16"

RECOMMENDED BY THE SAN DIEGO REGIONAL STANDARDS COMMITTEE

T. Stanton 3/10/2003

Chairperson R.C.E. 19246 Date

DRAWING NUMBER W-22

1. 25mm(1") Water service per Std. Dwg W-1
2. 25mm (1") Curb stop
3. Main connection X multiple branch connection
4. Brass coupling or 45 degree elbow
5. Brass nipple-102mm(4") min. length
6. Brass 45 degree elbow
7. Cast iron cap
8. Asbestos cement pipe
9. Thrust block per Std. Dwg W-17

NOTE: Nipple lengths to be sufficient to allow service connection to clear thrust block.

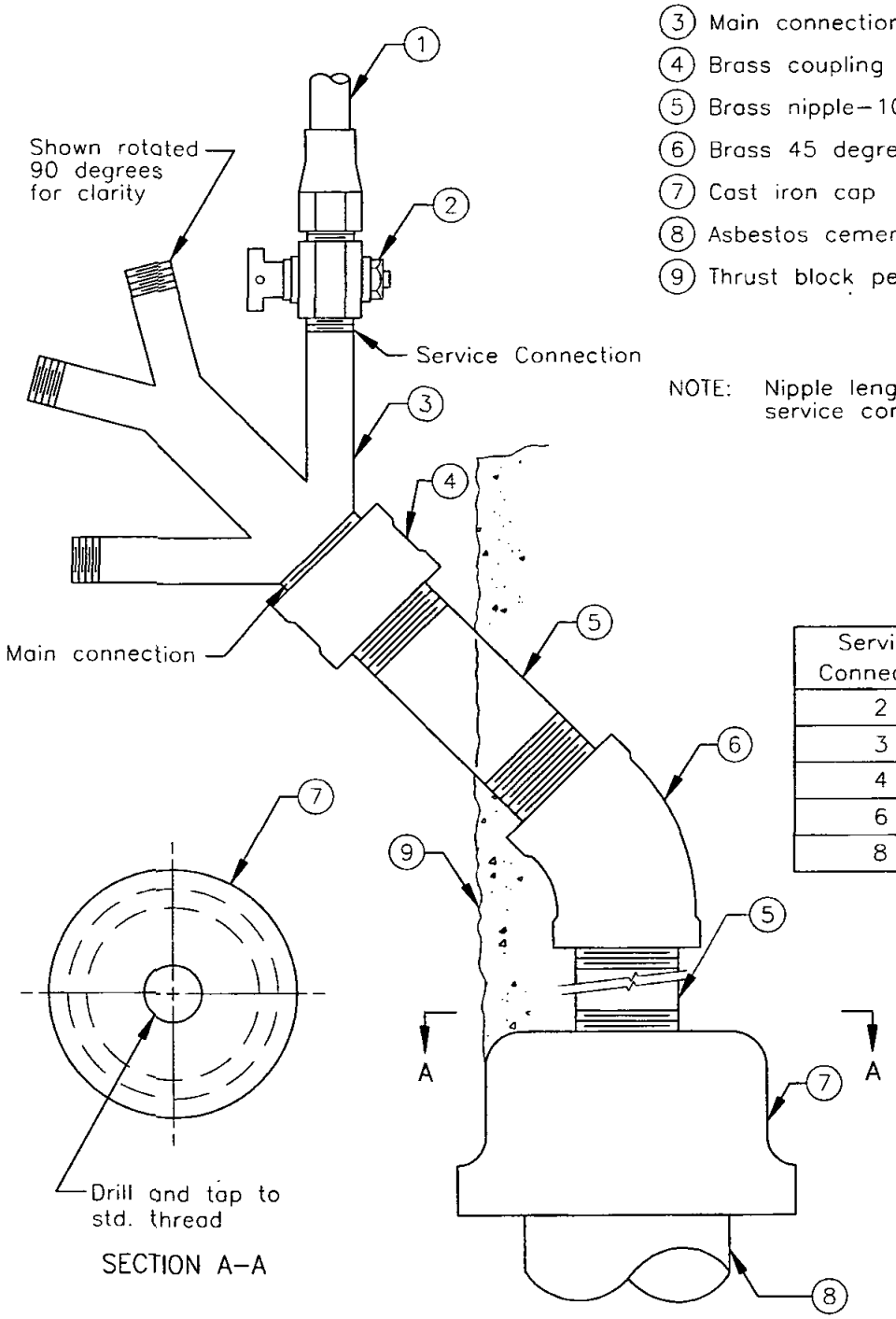

SECTION A-A

ELEVATION

Service Connection	Main Connection Item 5
2	32mm (1 1/4")
3	38mm (1 1/2")
4	51mm (2")
6	64mm (2 1/2")
8	76mm (3")

Revision	By	Approved	Date
ORIGINAL		D. Solomon	7/79
Add Metric		T. Stanton	03/03

SAN DIEGO REGIONAL STANDARD DRAWING

MUTIPLE SERVICE ASSEMBLY
DEAD END MAIN

RECOMMENDED BY THE SAN DIEGO REGIONAL STANDARDS COMMITTEE

T. Stanton 3/01/2003

Chairperson R.C.E. 19246 Date

DRAWING NUMBER W-23

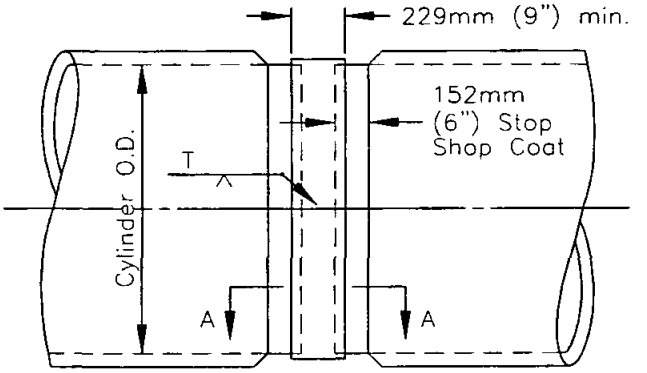

ELEVATION

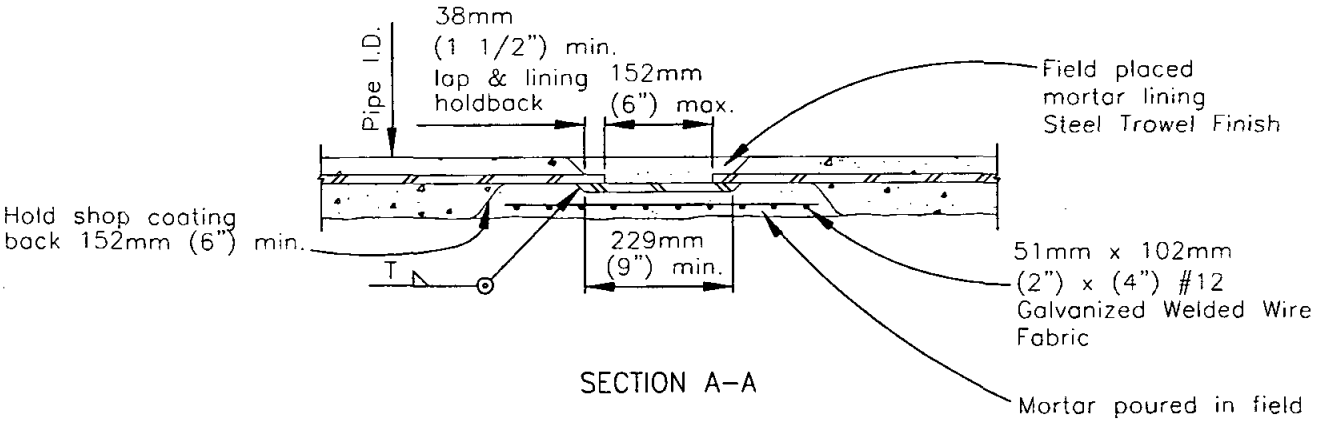

SECTION A–A

NOTE:

Contractor shall provide handholes as required to complete the work

Revision	By	Approved	Date
ORIGINAL		D. Solomon	7/79
Add Metric		T. Stanton	03/03

SAN DIEGO REGIONAL STANDARD DRAWING

SPLIT BUTT STRAP

RECOMMENDED BY THE SAN DIEGO REGIONAL STANDARDS COMMITTEE

T. Stanton 3/10/2003

Chairperson R.C.E. 19246 Date

DRAWING NUMBER W-24

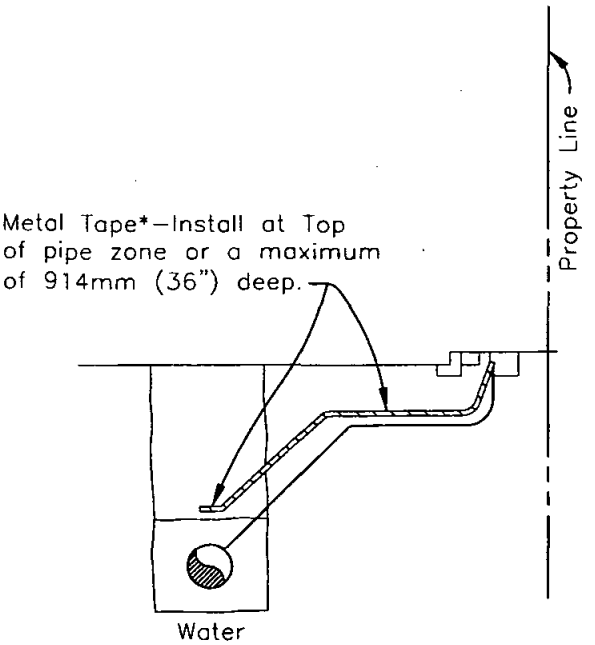

SECTION

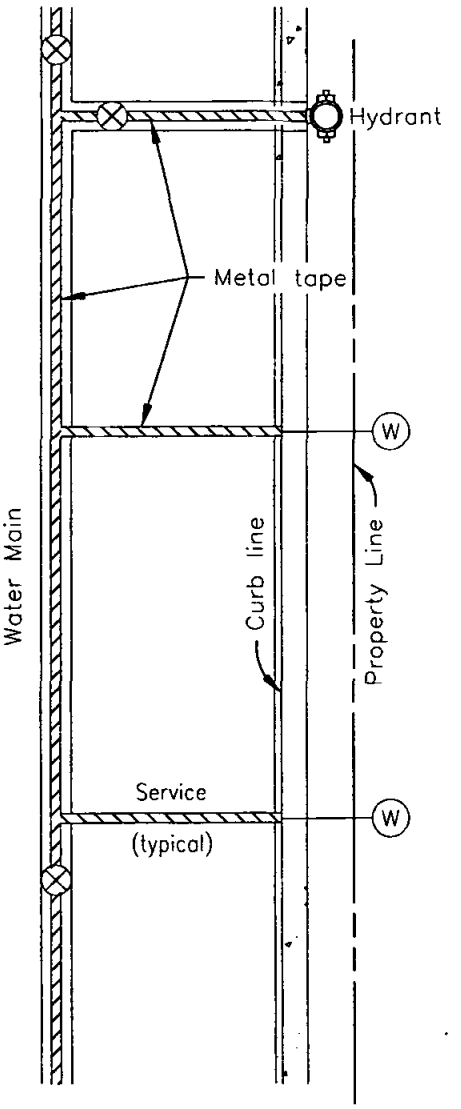

PLAN

NOTES

* 1. Use 51mm (2") tape for depths of 762mm (30") or less.
2. Use 76mm (3") tape for depths greater than 762 (30").
3. Adequately bond service tape to main tape to insure electrical continuity.
4. Tape shall extend into service box or well casing to allow for mark-out by continuity tester.

Revision	By	Approved	Date
ORIGINAL		M.Bahmanian	4/86
Add Metric		T. Stanton	03/03

SAN DIEGO REGIONAL STANDARD DRAWING

METALLIC TAPE LOCATOR
FOR NON-METALLIC WATER PIPE

RECOMMENDED BY THE SAN DIEGO REGIONAL STANDARDS COMMITTEE

T. Stanton 3/10/2003

Chairperson R.C.E. 19246 Date

DRAWING NUMBER W-25

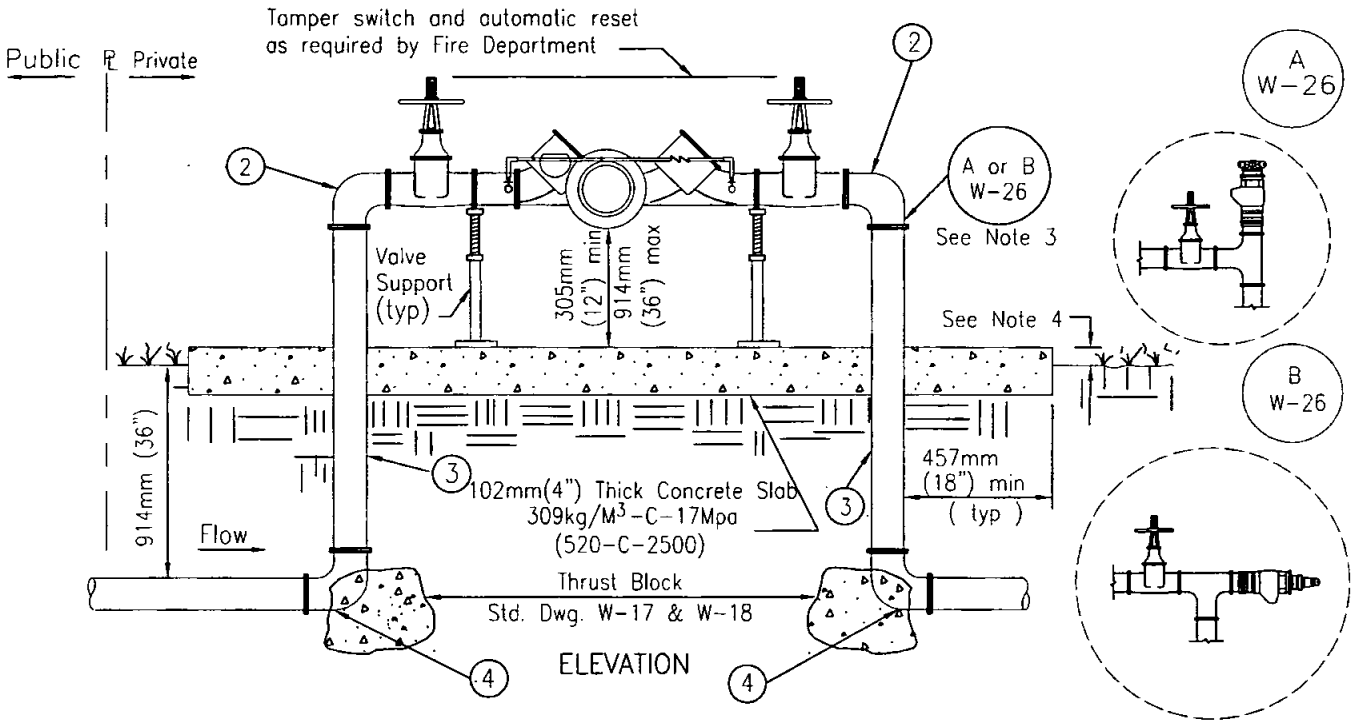

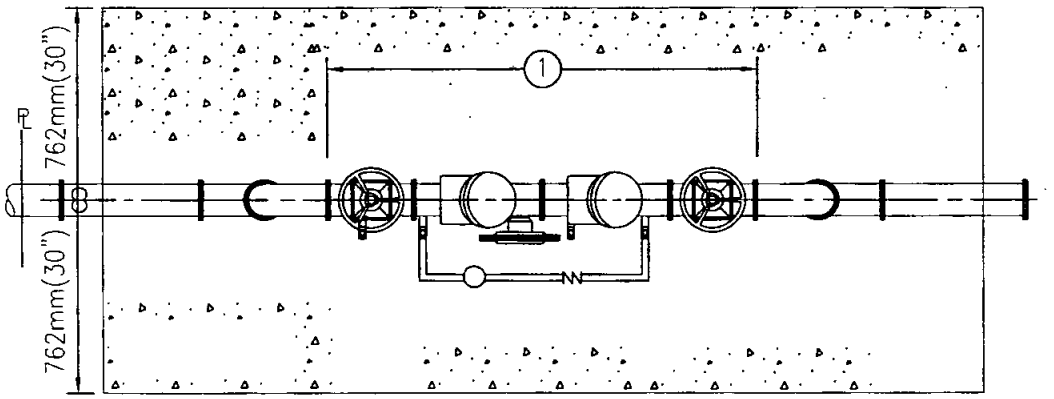

PLAN

NOTES

1. Backflow preventor assembly shall be tested upon installation by a certified backflow assembly tester. Contractor shall provide the Engineer with written test results completed by a certified backflow tester prior to backflow preventor assembly's acceptance by the Engineer.
2. All pipe below grade shall be wrapped as required by agency.
3. Elbow may be replaced with Fire Department connection as required by the Fire Department.
4. Concrete pad to be 51mm(2") above grade unless installed in lawn area where it will be at 25mm(1") above grade. Slope to drain.
5. Valve supports as required by agency.

(1) Reduced Pressure Principle Detection Assembly shall be included in the latest edition of the "Approved for Service Isolation California Public Water Systems" issued by the State of California Department of Health Services, Office of Drinking Water.

(2) 90° Flanged Cast Iron or Ductile Iron Elbow (typ)

(3) Flanged Ductile Iron Spool. Both ends shall be flanged(uni-flange shall not be used)

(4) 90° Ductile Iron Flanged Ebow

(W-26 AorB) Alternative installations for Fire Department connection.

LEGEND ON PLANS

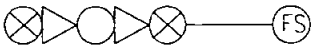

Revision	By	Approved	Date
ORIGINAL		R. Munoz	3/97
Add Metric		T. Stanton	03/03

SAN DIEGO REGIONAL STANDARD DRAWING

BACKFLOW PREVENTER REDUCED PRESSURE PRINICIPLE DETECTOR ASSEMBLY FOR FIRE SERVICE - 76mm(3") AND LARGER

RECOMMENDED BY THE SAN DIEGO REGIONAL STANDARDS COMMITTEE

T. Stanton 3/10/2003

Chairperson R.C.E. 19246 Date

DRAWING NUMBER W-26

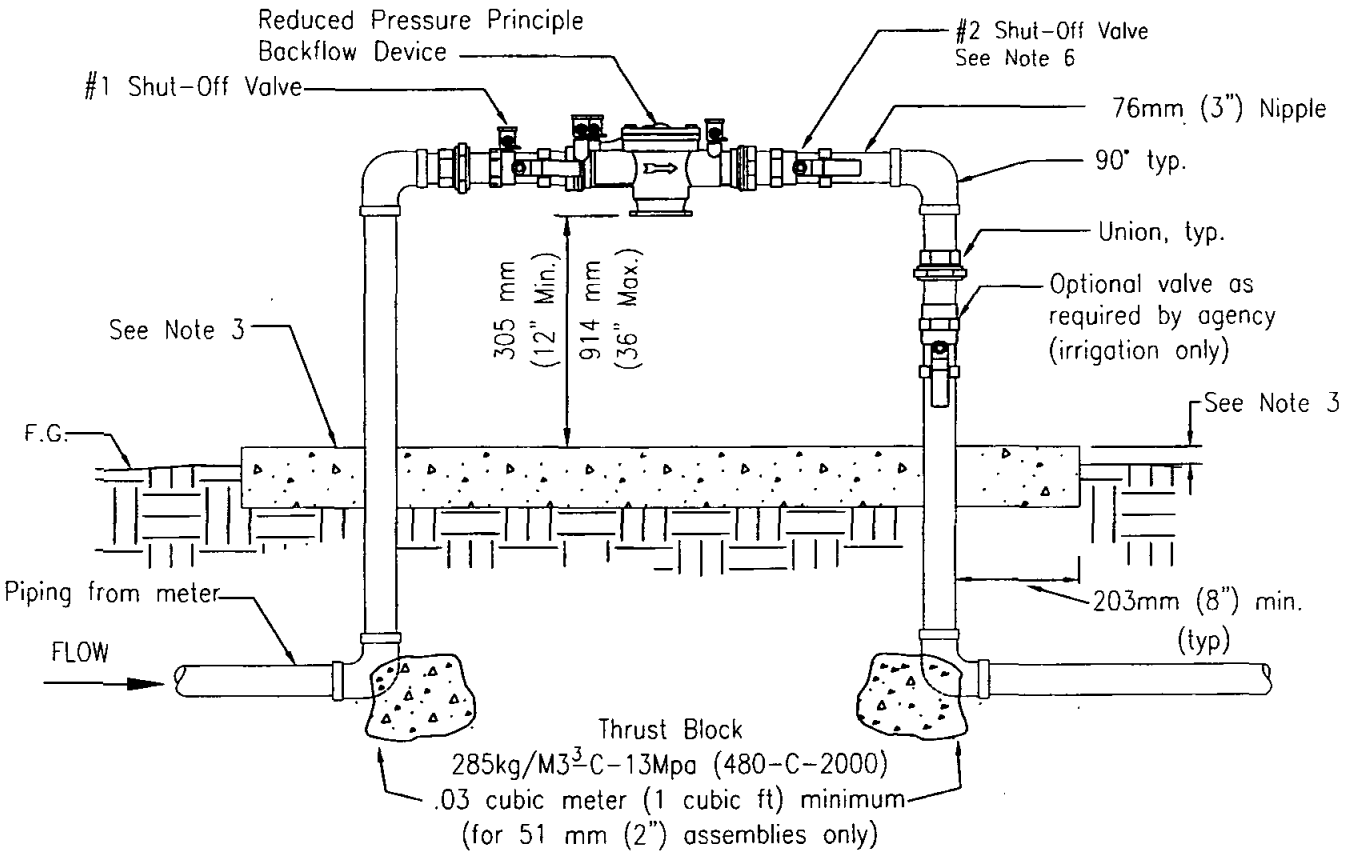

NOTES

1. Backflow preventer assembly shall be tested upon installation by a certified backflow device tester. Contractor shall provide the Engineer with written test results completed by a certified backflow tester prior to backflow preventer assembly's acceptance by the Engineer.
2. All pipe below grade shall be wrapped as required by agency.
3. Concrete pad to be 51mm(2") above grade unless installed in lawn area where it will be at 25mm(1") above grade. Concrete pad shall be 102mm (4") thick and 457mm(18") wide (min) 308kg/M 3/4 C-17Mpa (520-C-2500) slope to drain.
4. Reduced Pressure Principle Assembly shall be included in the latest edition of the "Approved for Service Isolation in California Public Water Systems" issued by the State of California Department of Health Services, Office of Drinking Water.
5. Regulator may be installed upstream of the backflow preventer assembly when water pressure exceeds backflow preventer assembly rating.
6. Wye strainer and downstream regulator, when required, shall be located downstream of the #2 shut off valve.
7. Protective enclosure for backflow preventer assembly shall be used at the discretion of the property owner.
8. Locate preventer assembly as close to meter as practical as approved by the agency.

LEGEND ON PLANS= ⊗ ⊘ ⊘ ⊗

Revision	By	Approved	Date
ORIGINAL		R. Munoz	3/97
Add Metric		T. Stanton	03/03

SAN DIEGO REGIONAL STANDARD DRAWING

BACKFLOW PREVENTER REDUCED PRESSURE PRINCIPLE ASSEMBLY 51mm (2") AND SMALLER

RECOMMENDED BY THE SAN DIEGO REGIONAL STANDARDS COMMITTEE

T. Stanton 3/10/2003

Chairperson R.C.E. 19246 Date

DRAWING NUMBER W-27

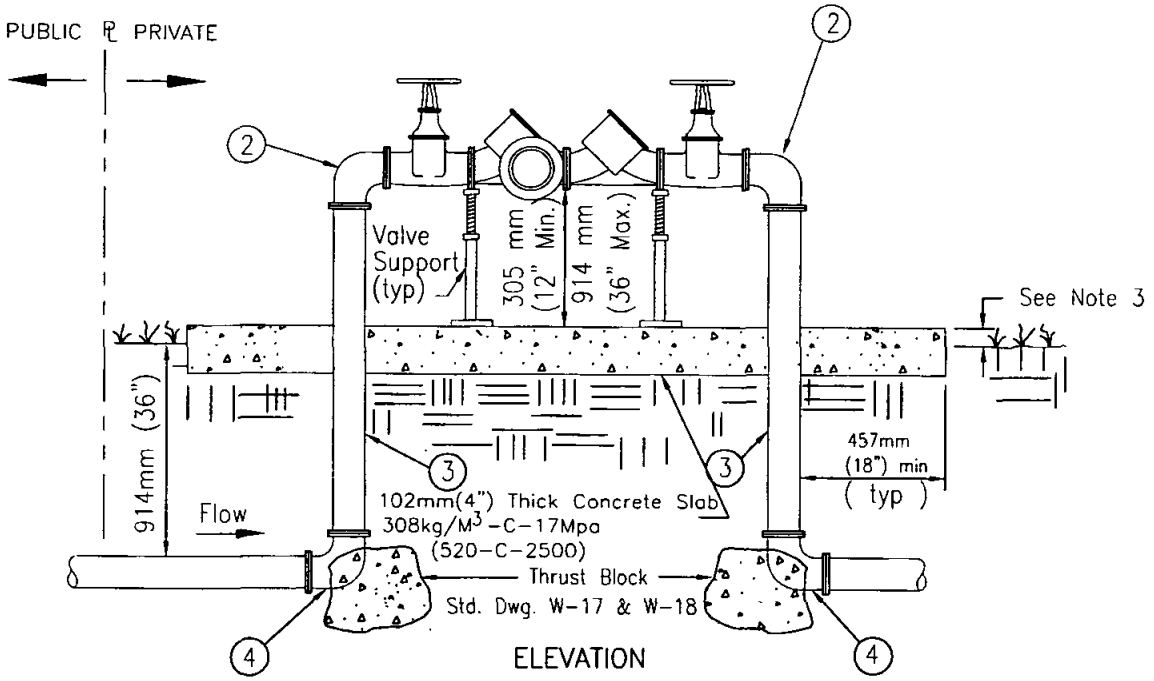

ELEVATION

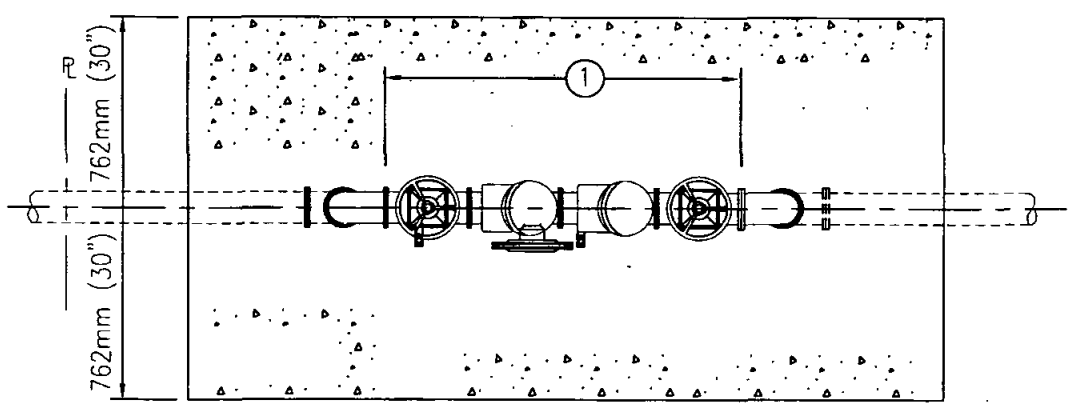

PLAN

NOTES

1. Backflow assembly shall be tested upon installation by a certified backflow assembly tester.
2. All pipe below grade shall be wrapped as required by agency.
3. Concrete pad to be 51mm(2") above grade unless installed in lawn area where it will be at 25mm (1") above grade. Slope to drain.
4. Protective enclosure for backflow preventer assembly shall be used at the discretion of the property owner.

① Reduced Pressure Principle Detection Assembly shall be included in the latest edition of the "Approved for Service Isolation California Public Water Systems" issued by the State of California, Department of Health Services, Office of Drinking Water.

② 90° Flanged cast iron or ductile iron elbow (typ)

③ Flanged ductile iron spool. Both ends shall be flanged(uni-flange shall not be used)

④ 90° ductile iron flanged elbow

LEGEND ON PLANS

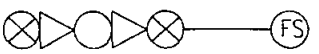

Revision	By	Approved	Date
ORIGINAL		R. Munoz	3/97
Add Metric		T. Stanton	03/03
			3/01/2003

SAN DIEGO REGIONAL STANDARD DRAWING

BACKFLOW PREVENTER REDUCED PRESSURE PRINCIPLE DETECTOR ASSEMBLY 76mm (3") AND LARGER

RECOMMENDED BY THE SAN DIEGO REGIONAL STANDARDS COMMITTEE

3/01/2003

Chairperson R.C.E. 19246 Date

DRAWING NUMBER W-28

APPENDIX "A"

TRAFFIC CONTROL PLANS

TRAFFIC CONTROL PLANS

REVISION	BY	APPROVED	DATE	SAN DIEGO REGIONAL STANDARD - APPENDIX "A"	DWG. NO.
				TRAFFIC CONTROL PLANS	TC

TRAFFIC CONTROL PLANS

GENERAL INFORMATION

The Traffic Control Plans depicted in this Appendix are intended to supplement Chapter 5 of the Caltrans Manual in providing guidance and information on preparing traffic control plans in an urban environment. Other references, such as the "W.A.T.C.H." manual, may also provide useful information on traffic control procedures. It should be understood that implementation of traffic control plans must conform with the latest edition of the Caltrans Traffic Manual (Chapter 5).

Chapter 5 of the Caltrans Traffic Manual, Traffic Controls for Construction and Maintenance Work Zones, is published by the State of California, Department of Transportation (Caltrans). This manual is issued to provide the basic standards for uniform types of warning signs, lights, and devices to be placed upon any public roadway or street by a person engaged in performing work which interferes with or endangers the safe movement of traffic upon such highway or street, in accordance with Section 21400 of the California Vehicle Code.

It is the responsibility of the Contractor or Organization performing work on, or adjacent to, a roadway to install and maintain such devices which are necessary to provide safe passage for the traveling public through the work area and for the safety of the workers. Before work begins, traffic control plans for handling traffic through a construction or maintenance project shall be approved by the engineer of the public agency or authority having jurisdiction over the roadway.

Typical plans for intersections that are controlled by a traffic signal or a multi-way stop are not identified in this Appendix. These intersections require special attention in the preparation of traffic control plans. The approving agency should be notified prior to the preparation of traffic control plans when the work is in or near these intersections.

Special attention is also needed on the traffic control plans when the work areas affect bike lanes, sidewalks, pedestrian access, and curved or narrow roadways. Notification of the approving agency is desireable prior to the preparation of the plan when bicycles and pedestrian routes are affected by the work.

Nothing contained in this Appendix shall prevent local jurisdictions from modifying, changing, or adopting new specifications deemed necessary. The text and typical drawings in this Appendix are not a legal standard. Criteria for position, location, and use of traffic control devices is furnished solely for the purpose of guidance and information to assist in the preparation of traffic control plans.

Revision	By	Approved	Date
DRAWING	DWV		4-91
ORIG.		[illegible]	10-8-91
		[illegible]	10-4-94

APPENDIX "A"
SAN DIEGO REGIONAL STANDARD

TRAFFIC CONTROL PLANS

GENERAL INFORMATION

DRAWING NUMBER TC-1

TRAFFIC CONTROL PLANS

TABLE OF CONTENTS

TC-1 GENERAL INFORMATION
TC-2 TABLE OF CONTENTS
TC-3 TABLE OF CONTENTS
TC-4 DEVICE SPACING TABLES
TC-5 TRAFFIC CONTROL PLAN COVER SHEET
TC-6 SIDE OF ROAD - TWO LANE ROADWAY w/o CENTERLINE
TC-7 SIDE OF ROAD - TWO LANE ROADWAY w/CENTERLINE
TC-8 CENTER OF ROAD - TWO LANE ROADWAY
TC-9 SIDE OF ROAD - TWO LANE ROADWAY WITH FLAGGERS
TC-10 SIDE OF ROAD - MULTILANE w/CENTERLINE - ONE RIGHT LANE
TC-11 SIDE OF ROAD - MULTILANE w/CENTERLINE - TWO RIGHT LANES
TC-12 CENTER OF ROAD - MULTILANE W/CENTERLINE - ONE LEFT LANE
TC-13 CENTER OF ROAD - MULTILANE w/CENTERLINE - TWO LEFT LANES
TC-14 SIDE OF ROAD - MULTILANE w/TWO-WAY LEFT-TURN - ONE RIGHT LANE
TC-15 CENTER OF ROAD - MULTILANE w/TWO-WAY LEFT-TURN - ONE LEFT LANE
TC-16 SIDE OF ROAD - MULTILANE w/TWO-WAY LEFT-TURN - ONE RIGHT LANE
TC-17 SIDE OF ROAD - MULTILANE w/TWO-WAY LEFT-TURN - TWO RIGHT LANES
TC-18 SIDE OF ROAD - MULTILANE w/TWO-WAY LEFT-TURN - THREE RIGHT LANES
TC-19 CENTER OF ROAD - MULTILANE w/TWO-WAY LEFT-TURN - TWO LEFT LANES
TC-20 CENTER OF ROAD - MULTILANE w/TWO-WAY LEFT-TURN - THREE LEFT LANES
TC-21 SIDE OF ROAD - MULTILANE w/RAISED MEDIAN - ONE RIGHT LANE
TC-22 CENTER OF ROAD - MULTILANE w/RAISED MEDIAN - ONE LEFT LANE
TC-23 SIDE OF ROAD - INTERSECTION - WORK ON MAIN STREET - FAR SIDE
TC-24 SIDE OF ROAD - INTERSECTION - WORK ON MAIN STREET - NEAR SIDE
TC-25 CENTER OF ROAD - INTERSECTION - WORK ON MAIN STREET - FAR SIDE
TC-26 CENTER OF ROAD - INTERSECTION - WORK ON MAIN STREET - NEAR SIDE
TC-27 CENTER OF ROAD - INTERSECTION - WORK IN CENTER OF INTERSECTION
TC-28 SIDE OF ROAD - INTERSECTION - WORK ON MINOR STREET - FAR SIDE
TC-29 CENTER OF ROAD - INTERSECTION - WORK ON MINOR STREET - FAR SIDE
TC-30 SIDE/SIDE OF ROAD - INTERSECTION - WORK IN INTERSECTION
TC-31 SIDE/CENTER OF ROAD - INTERSECTION - WORK IN INTERSECTION
TC-32 LEFT TURN INTERSECTION - W/COMBINATION THRU/LEFT LANE.
TC-33 LEFT TURN INTERSECTION -
TC-34 LEFT TURN INTERSECTION -
TC-35 LEFT TURN INTERSECTION -
TC-36 RIGHT TURN INTERSECTION -
TC-37 RIGHT TURN INTERSECTION -

TRAFFIC CONTROL PLANS

TABLE OF CONTENTS

TC-38 RIGHT TURN INTERSECTION -
TC-39 RIGHT TURN INTERSECTION -
TC-40 BIKE LANE CLOSURE
TC-41 SIDE OF ROAD WORK AREA - TYPICAL PEDESTRIAN CONTROL SIGNS
TC-42 SIDE OF ROAD WORK AREA - MULTILANE ROADWAY W/ RAISED MEDIAN
TC-43 WORK WITHIN INTERSECTION - RIGHT LANE / LEFT LANE
TC-44 TYPICAL SHOULDER CLOSURE - MULTILANE ROADWAY WITH RAISED MEDIAN
TC-90 SPECIAL CONDITIONS - TWO LANE ROADWAY w/o CENTERLINE
TC-91 SPECIAL CONDITIONS - TWO LANE ROADWAY w/CENTERLINE
TC-92 SPECIAL CONDITIONS - MULTILANE ROADWAY w/CENTERLINE
TC-93 SPECIAL CONDITIONS - MULTILANE ROADWAY w/TWO-WAY LEFT-TURN
TC-94 SPECIAL CONDITIONS - MULTILANE ROADWAY w/TWO-WAY LEFT-TURN
TC-95 SPECIAL CONDITIONS - MULTILANE ROADWAY w/RAISED MEDIAN
TC-96 SPECIAL CONDITIONS - INTERSECTION
TC-97 TYPICAL CONSTRUCTION SIGNS
TC-98 TYPICAL CONSTRUCTION SIGNS

Revision	By	Approved	Date
DRAWING	DWV		4-91
ORIG.			10-8-91
			8-3-94

APPENDIX "A"
SAN DIEGO REGIONAL STANDARD

TRAFFIC CONTROL PLANS

TABLE OF CONTENTS

DRAWING NUMBER TC-3

TABLE 1

RECOMMENDED SIGN SPACING FOR ADVANCE WARNING SIGN SERIES

APPROACH SPEED (MPH)	MINIMUM DISTANCE IN FEET BETWEEN SIGNS AND FROM LAST SIGN TO TAPER	MAXIMUM DEVICE SPACING IN FEET	MINIMUM TAPER LENGTHS FOR LANE WIDTHS *		
			10 FT	11 FT	12 FT
25	150-200	25	105	115	125
30	200-300	30	150	165	180
35	250-400	35	205	225	245
40	350-500	40	265	295	320
45	500-750	45	450	495	540
50	500-1000	50	500	550	600
55+	500-1500	50	550	605	660

* $L=WS^2/60$ FOR S OF 40 MPH OR LESS; $L=WS$ FOR S GREATER THAN 40 MPH. TAPER LENGTHS SHOWN ARE ROUNDED TO NEAREST 5 FEET.

TABLE 2

RECOMMENDED TAPER LENGTH AND DEVICE SPACING FOR CHANNELIZING TAPERS

APPROACH SPEED (MPH)	TAPER LENGTH (L) *	SPACING OF CONES ALONG TAPER (FEET) +_
25	125	25
30	180	30
35	245	35
40	320	40
45	540	45
50	600	50
50+	1000	50

(*) Based on 12-foot wide lane. This column is also appropriate for lane widths less than 12 feet

NOTES:

Taper Formula

$L = S \times W$ for speeds greater than 40 mph.

$L = \frac{W \times S^2}{60}$ for speeds of 40 mph or less

Where:

L = Minimum length of taper

S = Numerical value of APPROACH speed prior to work (mph)

W = Width of offset. (feet)

	APPENDIX "A" SAN DIEGO REGIONAL STANDARD	Revision	By	Approved	Date
		DRAWING	DWV FMM		4-91 6-9
	DEVICE SPACING TABLES	ORIG.	WAJ		10 8-
			DGB		9-1
DRAWING NUMBER TC-4	SIGN SPACING TABLE TAPER LENGTH AND CONE SPACING TABLE				

TRAFFIC CONTROL PLAN/PERMIT & PERMIT EXTENSION

Public Utility or Company: _____ Project Contact: _____
Address: _____
City: _____ State: _____ Zip Code: _____

24 Hour Local Phone: _____
Cellular: _____
Pager: _____
Fax: _____

Contractor/ Subcontractor: _____ Project Contact: _____
Address: _____
City: _____ State: _____ Zip Code: _____

24 Hour Local Phone: _____
Cellular: _____
Pager: _____
Fax: _____

JOB LOCATION	BEGIN CROSS STREET	END CROSS STREET	PERMIT NO.

WORK HOURS continuous FROM A.M. P.M. TO A.M. P.M.	SPEED LIMIT	WORK TO BE DONE	THOMAS BROS. PAGE: COORD.:

START DATE	END DATE	1st WORK DATE EXTENSION FROM	TO NEW END DATE	2nd WORK DATE EXTENSION FROM	TO NEW END DATE

PERMIT WORK EXTENSIONS MUST BE OBTAINED BY THE END OF PERMIT DATE

REQUIREMENTS:*

1. The contractor is responsible for promptly restoring the road back to satisfactory condition which includes, but is not limited to, paving, striping, markings, signing, and loop detection.

2. The Agency reserves the right to observe these traffic control plans in operation and to make changes as field conditions warrant.

3. Trenches shall be back-filled or steel-plated during non-work hours. Steel plates shall have an asphaltic ramp on all edges, securely supported so they won't rock and a sign posted near the plates identifying the contractors name and 24 hour emergency telephone number.

3. (cont.) All dirt, dust, and debris shall be removed from the street at the end of each day and at the end of the job. The street shall be kept in a driveable condition at all times.

4. Any work that creates an undue safety risk or that creates severe congestion will be shut down by the agency.

5. A copy of all traffic requirements and traffic control plans issued by the Agency must be kept on the job site.

6. Approval of this plan does not constitute an official Permit. Contact the Agency for information on obtaining a permit.

7. All travel lanes will typically be a minimum of 12 feet wide, 14 feet if adjacent to bike lanes, unless otherwise specifically approved by the Agency.

8. Flashing arrow boards as required by the Agency.

9. Warning (W) series signs used in work zones shall be Black on an Orange background.

10. Cones and pylons shall have yellow reflectorized sleeves when placed along the centerline and white reflectorized sleeves along the outside shoulder.

11. If Parking is allowed in the advance waring area, advance warning signs shall be mounted on high level devices.

12. The contractor shall post tow-away/no parking signs twenty-four (24) hours in advance, with day of week, date and work hours noted, and shall bag parking meters (where applicable).

THIS TRAFFIC CONTROL PLAN IS NOT VALID UNLESS AN APPLICABLE AGENCY PERMIT OR APPROVAL IS ATTACHED/AFFIXED

The applicant is responsible for complete represention of the actual road conditions shown on this plan including, but not limited to, existing striping, signing, sidewalks and bike lanes.

APPLICANTS :
Name (print) _____
Address _____
Phone Number _____
Signature _____

Agent of:
- ☐ Owner
- ☐ Contractor
- ☐ Sign/Barricade co.
- ☐ Other _____

PERMIT APPROVED
BY: _____
DATE: _____

* SUBJECT TO LOCAL AGENCY REQUIREMENTS.

SEE ATTACHED SHEET(S) OR REFERENCED STANDARD DRAWING(S) THAT MAY BE APPLICABLE

Revision	By	Approved	Date
[illegible]WING	F.Y. FMM		4-91 8-91
[illegible]G.	WAJ	[signature]	10-8-91 8-28-94
	DGB	[signature]	9-12-95

APPENDIX "A"
SAN DIEGO REGIONAL STANDARD

TRAFFIC CONTROL PLAN
COVER SHEET

DRAWING NUMBER TC-5

DRAWING NUMBER TC-6

SIDE OF ROAD WORK AREA

TWO LANE TRAFFIC CONTROL
WITHOUT CENTERLINE

APPENDIX "A"
SAN DIEGO REGIONAL STANDARD

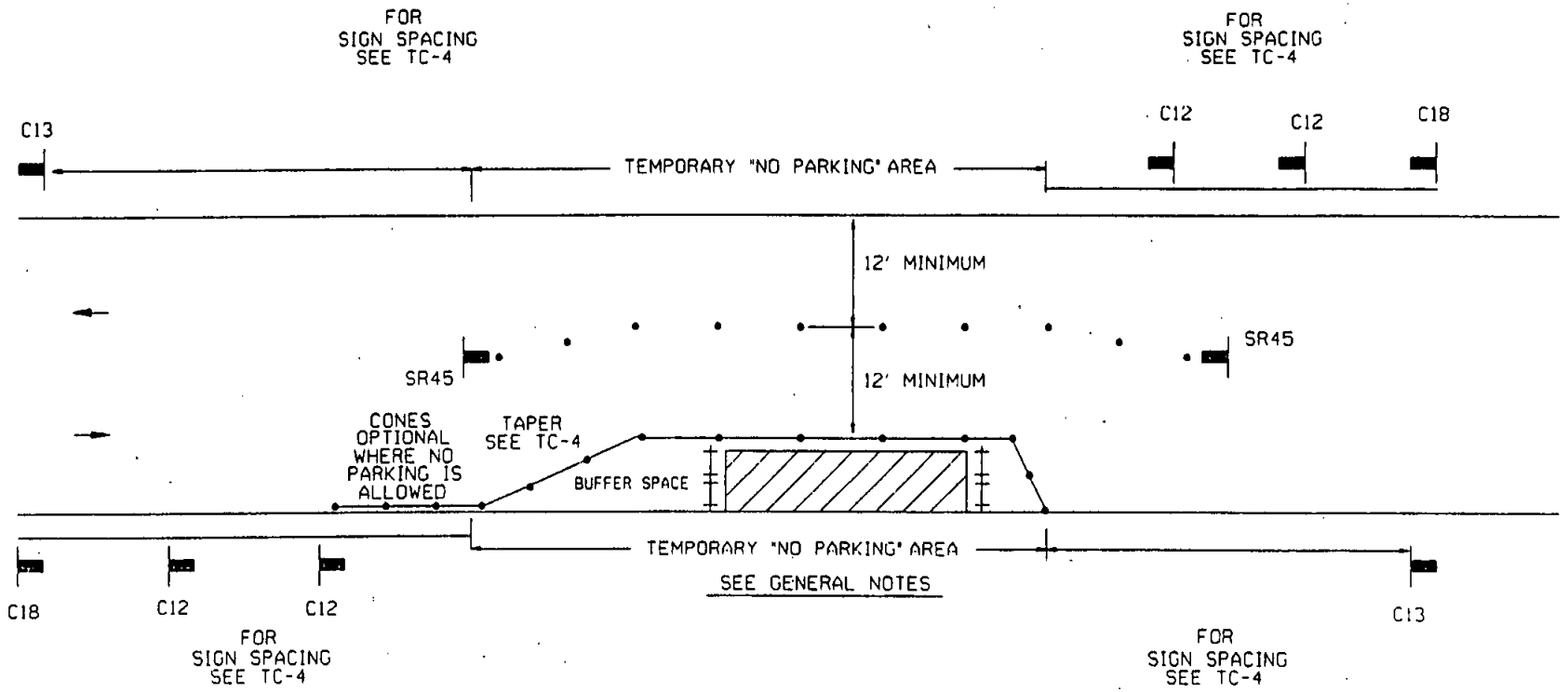

LEGEND

• CONE | BARRICADE | FLAGGER | SIGN | FLASHING ARROW SIGN | WORK AREA | TRAFFIC DIRECTION

AGENCY ENGINEER'S COMMENTS

AGENCY USE

POSTED SPEED LIMIT	APPROACH SPEED	TAPER LENGTH	SPACING OF CONES	SIGN SPACING

SEE TC-4 FOR SIGN, CONE SPACING AND TAPER LENGTH

GENERAL NOTES

For hours of darkness, change cones to vertical barricades with steady burn lights.

This plan DOES NOT apply at signalized or multi-way stop intersections. Consult the local jurisdiction when preparing Traffic Control Plans near these intersections.

This plan MAY NOT apply when the work areas affect bike lanes, sidewalks, pedestrian access, and curved or narrow roadways. Consult the approving agency when preparing the Traffic Control Plan for these areas.

Nothing contained on this drawing shall prevent local jurisdictions from modifying changing, or adopting new specifications deemed necessary. Criteria for position, location, and use of Traffic Control Devices is solely for the purpose of guidance to assist in the set up of the Traffic Control Plans.

TC-5 is required for all Traffic Control Plans.

APPLICANT USE

SUBMITTED BY:
NAME
COMPANY
ADDRESS
PHONE

Revision	By	Approved	Date
DRAWING	DMV FMM		4-9-91
ORIG.	WAJ		8-8-91
	WAJ		8-23-94
	DDB		4-25-95
			9-14-95

Drawing	By	Approved	Date
ORIG.	DWW FMM		4-91
	WAJ		8-91
	WAJ		10-6-91
	DGB		8-3-94
			4-25-95
			9-14-95

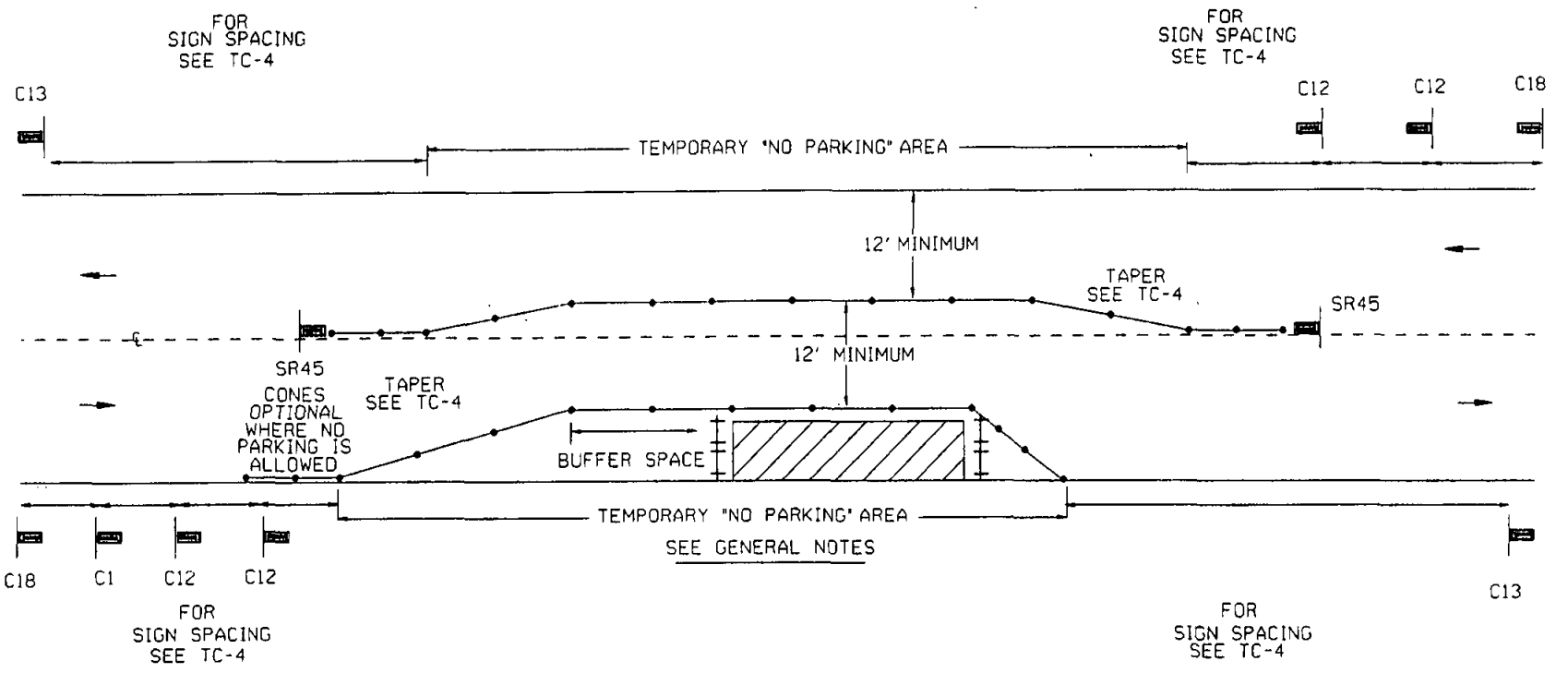

LEGEND

• CONE | BARRICADE | FLAGGER | SIGN | FLASHING ARROW SIGN | WORK AREA | TRAFFIC DIRECTION

AGENCY ENGINEER'S COMMENTS

AGENCY USE

POSTED SPEED LIMIT	APPROACH SPEED	TAPER LENGTH	SPACING OF CONES	SIGN SPACING

SEE TC-4 FOR SIGN, CONE SPACING AND TAPER LENGTH

GENERAL NOTES

For hours of darkness, change cones to vertical barricades with steady burn lights.

This plan DOES NOT apply at signalized or multi-way stop intersections. Consult the local jurisdiction when preparing Traffic Control Plans near these intersections.

This plan MAY NOT apply when the work areas affect bike lanes, sidewalks, pedestrian access, and curved or narrow roadways. Consult the approving agency when preparing the Traffic Control Plan for these areas.

Nothing contained on this drawing shall prevent local jurisdictions from modifying changing, or adopting new specifications deemed necessary. Criteria for position, location, and use of Traffic Control Devices is solely for the purpose of guidance to assist in the set up of the Traffic Control Plans.

TC-5 is required for all Traffic Control Plans.

APPLICANT USE

SUBMITTED BY:
NAME _____
COMPANY _____
ADDRESS _____
PHONE _____

SIDE OF ROAD WORK AREA

TWO LANE TRAFFIC CONTROL WITH CENTERLINE

APPENDIX "A"
SAN DIEGO REGIONAL STANDARD

DRAWING NUMBER TC-7

DRAWING NUMBER TC-8

CENTER OF ROAD WORK AREA

TWO LANE TRAFFIC CONTROL

APPENDIX "A"

SAN DIEGO REGIONAL STANDARD

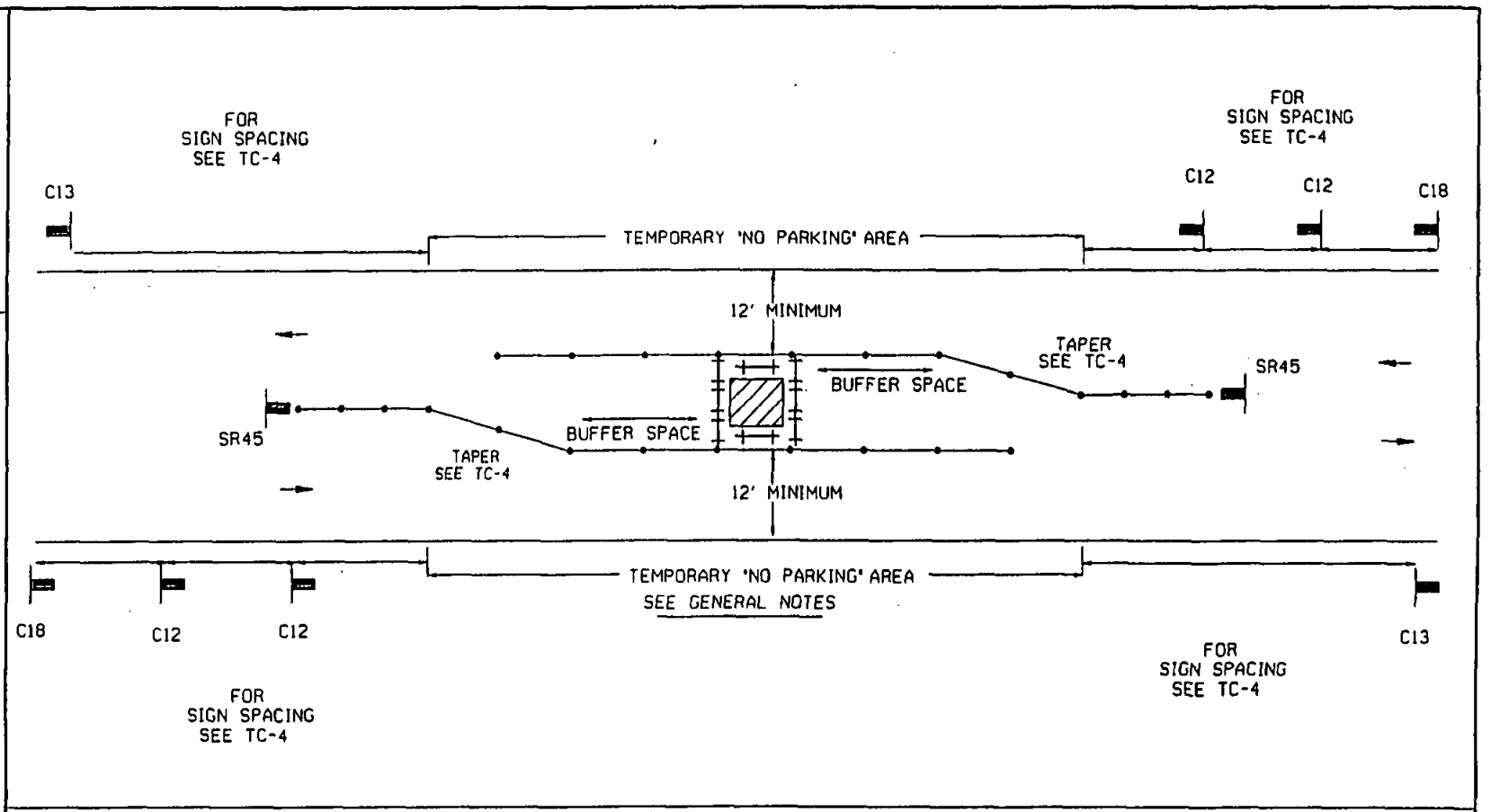

LEGEND

• CONE — BARRICADE — FLAGGER — SIGN — FLASHING ARROW SIGN — WORK AREA — TRAFFIC DIRECTION

AGENCY ENGINEER'S COMMENTS

AGENCY USE

POSTED SPEED LIMIT	APPROACH SPEED	TAPER LENGTH	SPACING OF CONES	SIGN SPACING

SEE TC-4 FOR SIGN, CONE SPACING AND TAPER LENGTH

GENERAL NOTES

For hours of darkness, change cones to vertical barricades with steady burn lights.

This plan DOES NOT apply at signalized or multi-way stop intersections. Consult the local jurisdiction when preparing Traffic Control Plans near these intersections.

This plan MAY NOT apply when the work areas affect bike lanes, sidewalks, pedestrian access, and curved or narrow roadways. Consult the approving agency when preparing the Traffic Control Plan for these areas.

Nothing contained on this drawing shall prevent local jurisdictions from modifying changing, or adopting new specifications deemed necessary. Criteria for position, location, and use of Traffic Control Devices is solely for the purpose of guidance to assist in the set up of the Traffic Control Plans.

TC-5 is required for all Traffic Control Plans.

APPLICANT USE

SUBMITTED BY:
NAME
COMPANY
ADDRESS
PHONE

Revision	By	Approved	Date
DRAWING	DWV FMM		4-91 8-91
ORIG.	WAJ	[signature]	10-8-91 8-3-94
	WAJ DGB	[signature]	4-2[illegible] 9-[illegible]

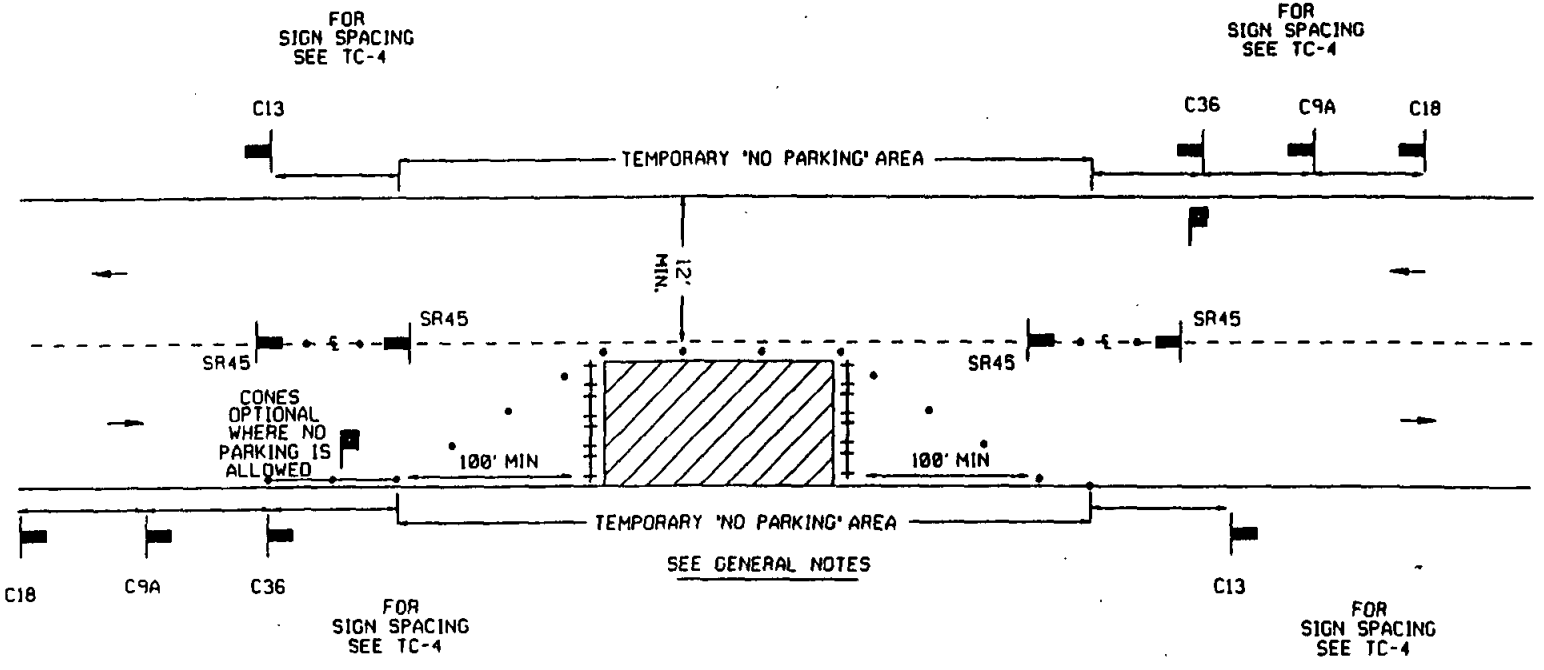

EYE CONTACT MUST BE MAINTAINED BETWEEN FLAGGERS OR USE 2-WAY RADIO COMMUNICATION.

FLAGGER - REFER TO CALTRANS MANUAL 5-07.3

LEGEND

• CONE ++ BARRICADE FLAGGER SIGN FLASHING ARROW SIGN WORK AREA TRAFFIC DIRECTION

AGENCY ENGINEER'S COMMENTS

AGENCY USE

POSTED SPEED LIMIT	APPROACH SPEED	TAPER LENGTH	SPACING OF CONES	SIGN SPACING

SEE TC-4 FOR SIGN, CONE SPACING AND TAPER LENGTH

GENERAL NOTES

For hours of darkness, change cones to vertical barricades with steady burn lights.

This plan DOES NOT apply at signalized or multi-way stop intersections. Consult the local jurisdiction when preparing Traffic Control Plans near these intersections.

This plan MAY NOT apply when the work areas affect bike lanes, sidewalks, pedestrian access, and curved or narrow roadways. Consult the approving agency when preparing the Traffic Control Plan for these areas.

Nothing contained on this drawing shall prevent local jurisdictions from modifying changing, or adopting new specifications deemed necessary. Criteria for position, location, and use of Traffic Control Devices is solely for the purpose of guidance to assist in the set up of the Traffic Control Plans.

TC-5 is required for all Traffic Control Plans.
FLAGGER - REFER TO CALTRANS MANUAL 5-07.3

APPLICANT USE

SUBMITTED BY:
NAME
COMPANY
ADDRESS
PHONE

Revision	By	Approved	Date
DRAWING	DWV FMM		4-91 8-91
ORIG.	WAJ		10-8-91 8-30-94
	WAJ DGB		4-25-95 9-15-95

APPENDIX "A"
SAN DIEGO REGIONAL STANDARD

SIDE OF ROAD WORK AREA

TWO LANE TRAFFIC CONTROL
WITH FLAGGERS

DRAWING NUMBER TC-9

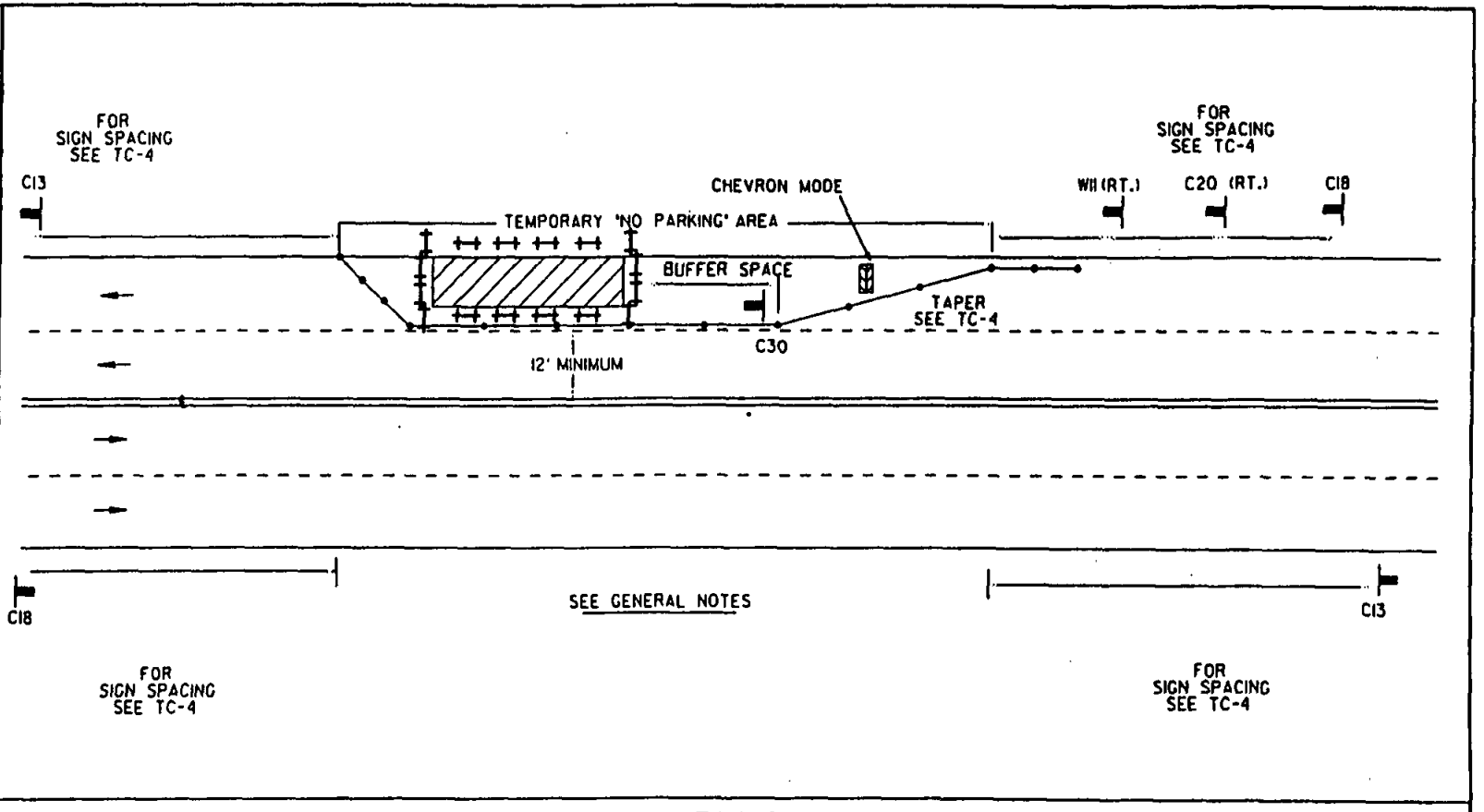

LEGEND

• CONE | BARRICADE | FLAGGER | SIGN | FLASHING ARROW SIGN | WORK AREA | TRAFFIC DIRECTION

AGENCY ENGINEER'S COMMENTS

AGENCY USE

POSTED SPEED LIMIT	APPROACH SPEED	TAPER LENGTH	SPACING OF CONES	SIGN SPACING

SEE TC-4 FOR SIGN, CONE SPACING AND TAPER LENGTH

GENERAL NOTES

For hours of darkness, change cones to vertical barricades with steady burn lights.

This plan DOES NOT apply at signalized or multi-way stop intersections. Consult the local jurisdiction when preparing Traffic Control Plans near these intersections.

This plan MAY NOT apply when the work areas affect bike lanes, sidewalks, pedestrian access, and curved or narrow roadways. Consult the approving agency when preparing the Traffic Control Plan for these areas.

Nothing contained on this drawing shall prevent local jurisdictions from modifying changing, or adopting new specifications deemed necessary. Criteria for position, location, and use of Traffic Control Devices is solely for the purpose of guidance to assist in the set up of the Traffic Control Plans.

TC-5 is required for all Traffic Control Plans.

APPLICANT USE

SUBMITTED BY:
NAME
COMPANY
ADDRESS
PHONE

SIDE OF ROAD WORK AREA

MULTILANE TRAFFIC CONTROL WITH CENTERLINE
RIGHT TRAFFIC LANE CLOSURE - ONE LANE

APPENDIX "A"
SAN DIEGO REGIONAL STANDARD

DRAWING NUMBER TC-10

Revision	By	Approved	Date
DRAWING	DMV		4-96
DRAWING	EMM		8-94
ORIG.	MAJ		11-25-91
	RGB		4-25-91

Revision	By	Approved	Date
DRAWING	DGV		4-91
ORIG.	WAJ		8-91
	WAJ		10-25-91
	WAJ		11-18-91
	WAJ		10-4-94
	DGB		4-25-95
			9-15-95

SIDE OF ROAD WORK AREA

MULTILANE TRAFFIC CONTROL WITH CENTERLINE

RIGHT TRAFFIC LANE CLOSURE - TWO LANES

APPENDIX "A"

SAN DIEGO REGIONAL STANDARD

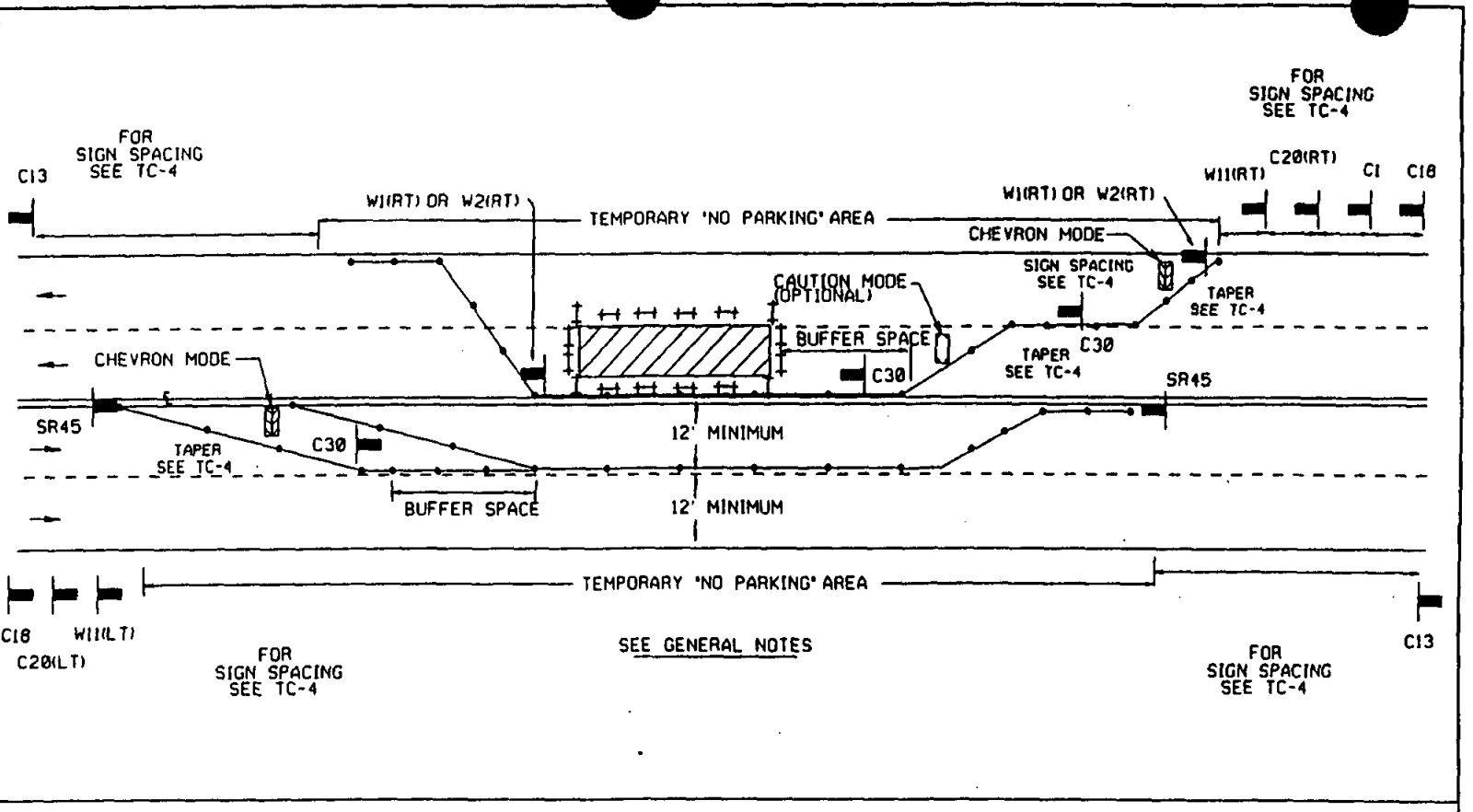

LEGEND

• CONE ⊢⊣ BARRICADE FLAGGER SIGN FLASHING ARROW SIGN WORK AREA TRAFFIC DIRECTION

AGENCY ENGINEER'S COMMENTS

AGENCY USE

POSTED SPEED LIMIT	APPROACH SPEED	TAPER LENGTH	SPACING OF CONES	SIGN SPACING

SEE TC-4 FOR SIGN, CONE SPACING AND TAPER LENGTH

GENERAL NOTES

For hours of darkness, change cones to vertical barricades with steady burn lights.

This plan DOES NOT apply at signalized or multi-way stop intersections. Consult the local jurisdiction when preparing Traffic Control Plans near these intersections.

This plan MAY NOT apply when the work areas affect bike lanes, sidewalks, pedestrian access, and curved or narrow roadways. Consult the approving agency when preparing the Traffic Control Plan for these areas.

Nothing contained on this drawing shall prevent local jurisdictions from modifying changing, or adopting new specifications deemed necessary. Criteria for position, location, and use of Traffic Control Devices is solely for the purpose of guidance to assist in the set up of the Traffic Control Plans.

TC-5 is required for all Traffic Control Plans.

APPLICANT USE

SUBMITTED BY:

NAME _____

COMPANY _____

ADDRESS _____

PHONE _____

DRAWING NUMBER TC-11

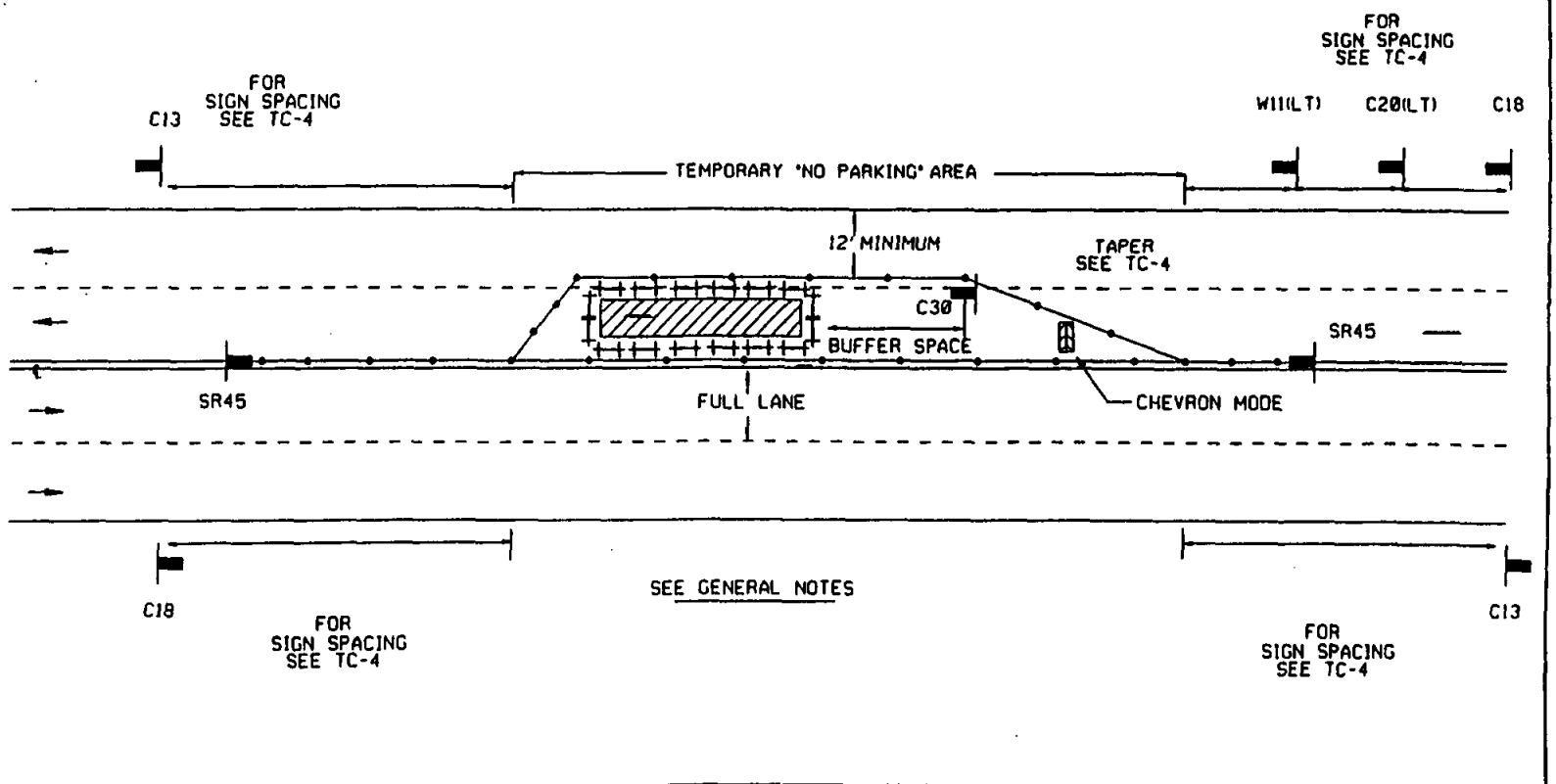

LEGEND

• CONE ⊢⊣ BARRICADE FLAGGER SIGN FLASHING ARROW SIGN WORK AREA TRAFFIC DIRECTION

AGENCY ENGINEER'S COMMENTS

AGENCY USE

POSTED SPEED LIMIT	APPROACH SPEED	TAPER LENGTH	SPACING OF CONES	SIGN SPACING

SEE TC-4 FOR SIGN, CONE SPACING AND TAPER LENGTH

GENERAL NOTES

For hours of darkness, change cones to vertical barricades with steady burn lights.

This plan DOES NOT apply at signalized or multi-way stop intersections. Consult the local jurisdiction when preparing Traffic Control Plans near these intersections.

This plan MAY NOT apply when the work areas affect bike lanes, sidewalks, pedestrian access, and curved or narrow roadways. Consult the approving agency when preparing the Traffic Control Plan for these areas.

Nothing contained on this drawing shall prevent local jurisdictions from modifying changing, or adopting new specifications deemed necessary. Criteria for position, location, and use of Traffic Control Devices is solely for the purpose of guidance to assist in the set up of the Traffic Control Plans.

TC-5 is required for all Traffic Control Plans.

APPLICANT USE

SUBMITTED BY:
NAME
COMPANY
ADDRESS
PHONE

CENTER OF ROAD WORK AREA

MULTILANE TRAFFIC CONTROL WITH CENTERLINE
LEFT TRAFFIC LANE CLOSURE - ONE LANE

APPENDIX "A"
SAN DIEGO REGIONAL STANDARD

Revision	By	Approved	Date
DRAWING	DBW	FHM	4-91
DRAWING	WAJ		8-91
	WAJ		6-9-94
	DGB		4-12-95

DRAWING NUMBER TC-12

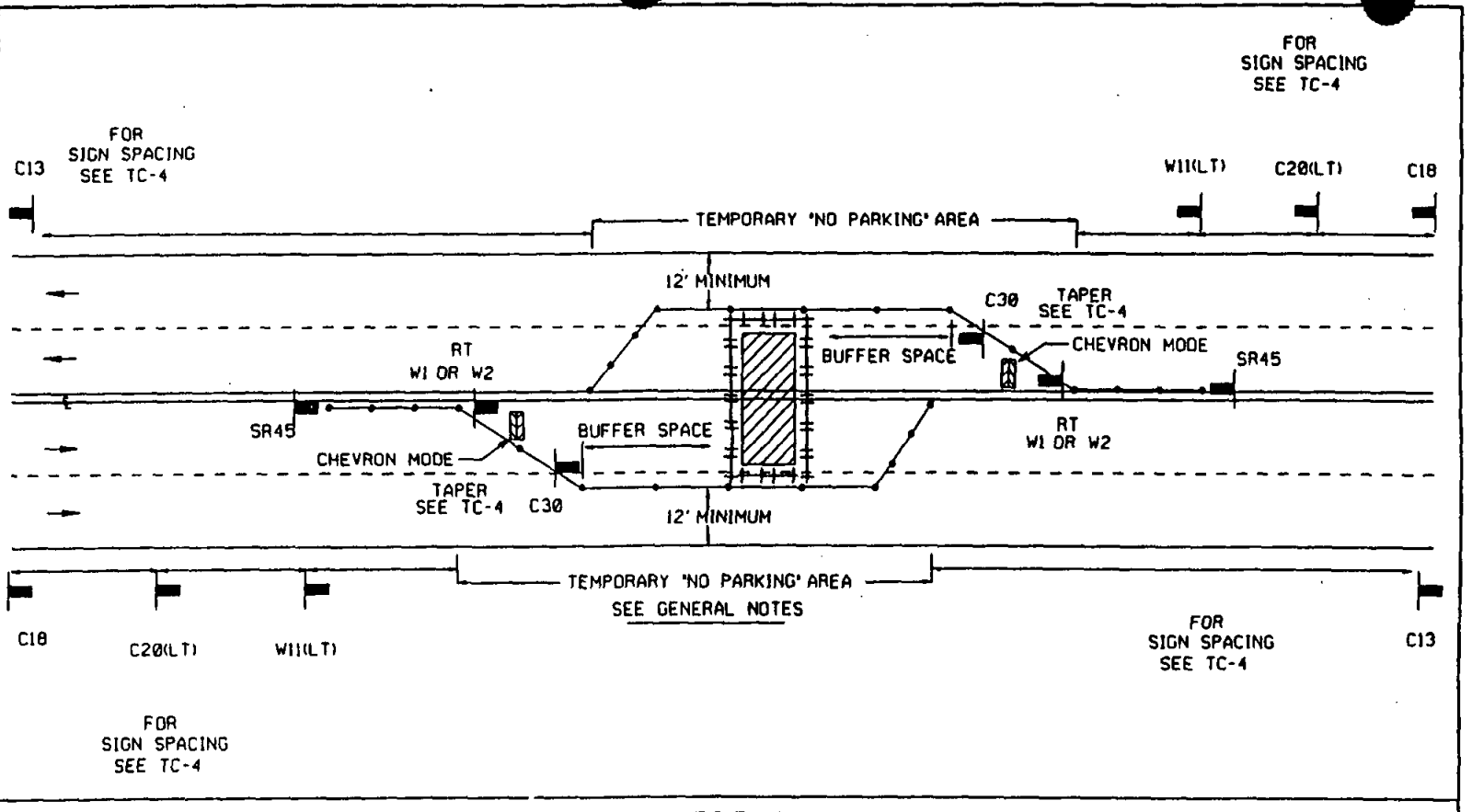

LEGEND

• CONE BARRICADE FLAGGER SIGN FLASHING ARROW SIGN WORK AREA TRAFFIC DIRECTION

AGENCY ENGINEER'S COMMENTS

AGENCY USE

POSTED SPEED LIMIT	APPROACH SPEED	TAPER LENGTH	SPACING OF CONES	SIGN SPACING

SEE TC-4 FOR SIGN, CONE SPACING AND TAPER LENGTH

GENERAL NOTES

For hours of darkness, change cones to vertical barricades with steady burn lights.

This plan DOES NOT apply at signalized or multi-way stop intersections. Consult the local jurisdiction when preparing Traffic Control Plans near these intersections.

This plan MAY NOT apply when the work areas affect bike lanes, sidewalks, pedestrian access, and curved or narrow roadways. Consult the approving agency when preparing the Traffic Control Plan for these areas.

Nothing contained on this drawing shall prevent local jurisdictions from modifying changing, or adopting new specifications deemed necessary. Criteria for position, location, and use of Traffic Control Devices is solely for the purpose of guidance to assist in the set up of the Traffic Control Plans.

TC-5 is required for all Traffic Control Plans.

APPLICANT USE

SUBMITTED BY:
NAME
COMPANY
ADDRESS
PHONE

Revision	By	Approved	Date
DRAWING	DWY FMM		4-91 8-91
ORIG.	WAJ DGB		10-8-91 8-3-94 4-25-95 9-15-95

APPENDIX "A"
SAN DIEGO REGIONAL STANDARD

CENTER OF ROAD WORK AREA

MULTILANE TRAFFIC CONTROL WITH CENTERLINE
LEFT TRAFFIC LANE CLOSURE - TWO LANES

DRAWING NUMBER TC-13

DRAWING NUMBER TC-14

SIDE OF ROAD WORK AREA

MULTILANE TRAFFIC CONTROL WITH TWO WAY LEFT TURN
RIGHT LANE TRAFFIC CLOSURE - ONE LANE

APPENDIX "A"
SAN DIEGO REGIONAL STANDARD

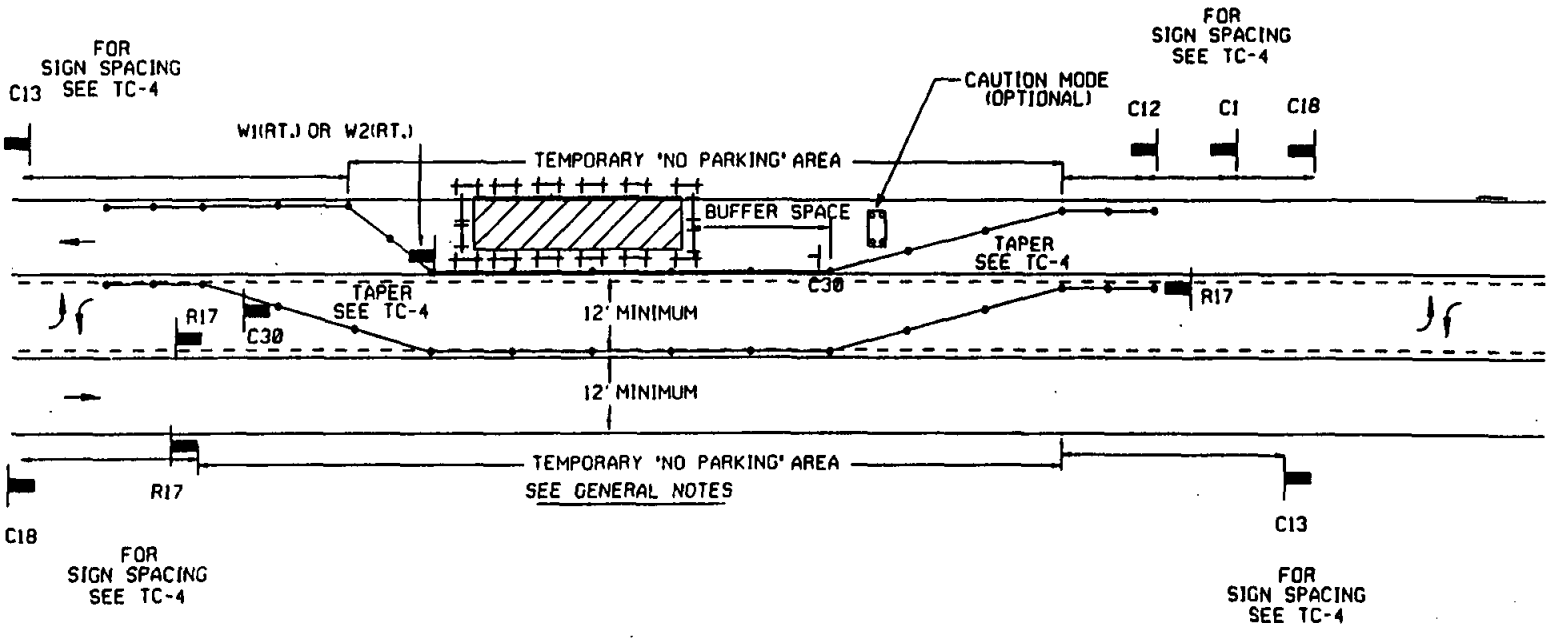

LEGEND

• CONE BARRICADE FLAGGER SIGN FLASHING ARROW SIGN WORK AREA TRAFFIC DIRECTION

AGENCY USE

AGENCY ENGINEER'S COMMENTS

POSTED SPEED LIMIT	APPROACH SPEED	TAPER LENGTH	SPACING OF CONES	SIGN SPACING

SEE TC-4 FOR SIGN, CONE SPACING AND TAPER LENGTH

GENERAL NOTES

For hours of darkness, change cones to vertical barricades with steady burn lights.

This plan DOES NOT apply at signalized or multi-way stop intersections. Consult the local jurisdiction when preparing Traffic Control Plans near these intersections.

This plan MAY NOT apply when the work areas affect bike lanes, sidewalks, pedestrian access, and curved or narrow roadways. Consult the approving agency when preparing the Traffic Control Plan for these areas.

Nothing contained on this drawing shall prevent local jurisdictions from modifying changing, or adopting new specifications deemed necessary. Criteria for position, location, and use of Traffic Control Devices is solely for the purpose of guidance to assist in the set up of the Traffic Control Plans.

TC-5 is required for all Traffic Control Plans.

APPLICANT USE

SUBMITTED BY:
NAME
COMPANY
ADDRESS
PHONE

Revision	By	Approved	Date
ORIG.			11-18-91
DRAWING	DGV FMM		4-1-92
	WAJ		4-2-92
	DGB		9-15-95

Revision	By	Approved	Date
DRAWING	DWV FMM		4-91 8-91
ORIG.	WAJ		10-8-91
	WAJ DGB		8-30-94 4-25-95 9-15-95

CENTER OF ROAD WORK AREA

MULTILANE TRAFFIC CONTROL WITH CENTERLINE
LEFT LANE CLOSURE - ONE LANE

APPENDIX "A"
SAN DIEGO REGIONAL STANDARD

DRAWING NUMBER TC-15

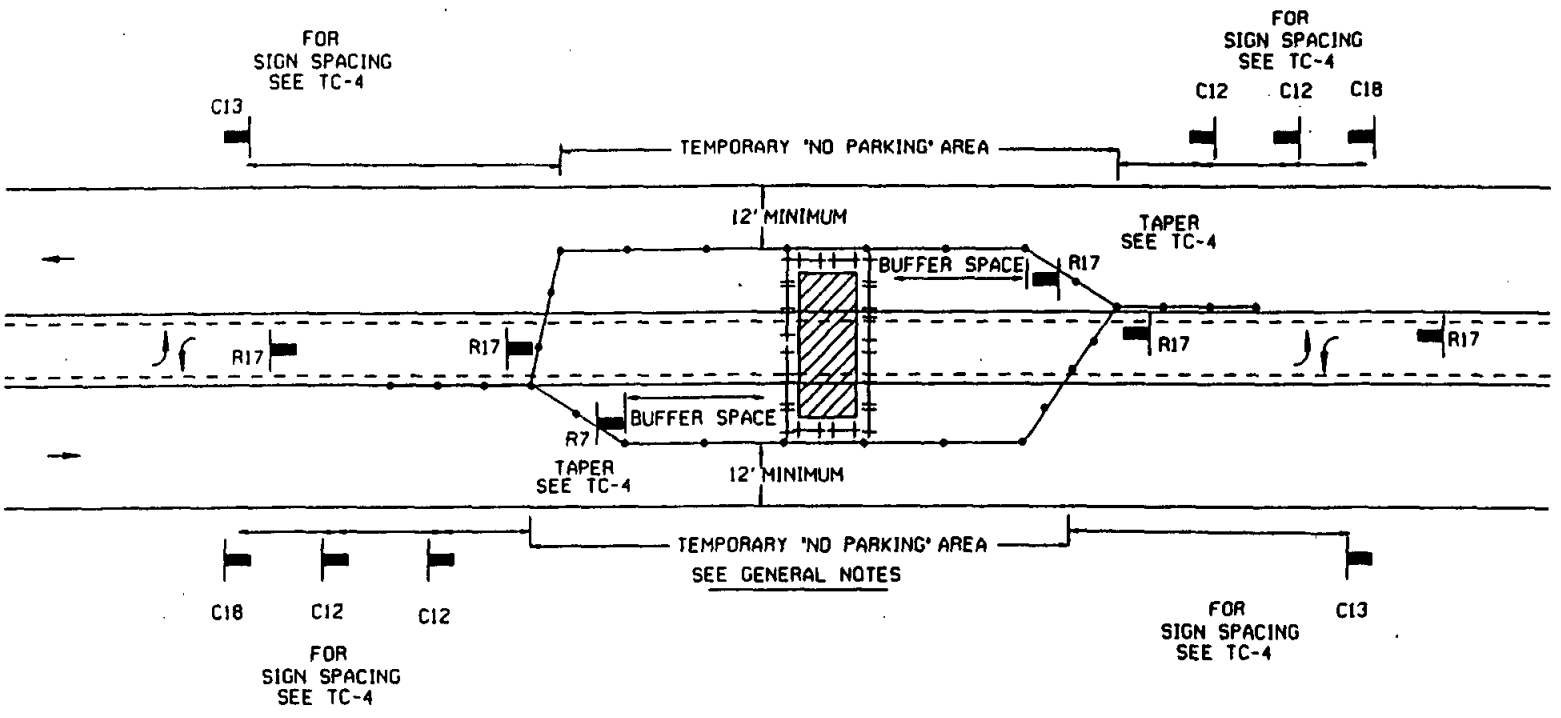

LEGEND

• CONE | BARRICADE | FLAGGER | SIGN | FLASHING ARROW SIGN | WORK AREA | TRAFFIC DIRECTION

AGENCY ENGINEER'S COMMENTS

AGENCY USE

POSTED SPEED LIMIT	APPROACH SPEED	TAPER LENGTH	SPACING OF CONES	SIGN SPACING

SEE TC-4 FOR SIGN, CONE SPACING AND TAPER LENGTH

GENERAL NOTES

For hours of darkness, change cones to vertical barricades with steady burn lights.

This plan DOES NOT apply at signalized or multi-way stop intersections. Consult the local jurisdiction when preparing Traffic Control Plans near these intersections.

This plan MAY NOT apply when the work areas affect bike lanes, sidewalks, pedestrian access, and curved or narrow roadways. Consult the approving agency when preparing the Traffic Control Plan for these areas.

Nothing contained on this drawing shall prevent local jurisdictions from modifying changing, or adopting new specifications deemed necessary. Criteria for position, location, and use of Traffic Control Devices is solely for the purpose of guidance to assist in the set up of the Traffic Control Plans.

TC-5 is required for all Traffic Control Plans.

APPLICANT USE

SUBMITTED BY:
NAME _____
COMPANY _____
ADDRESS _____
PHONE _____

DRAWING NUMBER TC-16

SIDE OF ROAD WORK AREA

MULTILANE TRAFFIC CONTROL WITH TWO WAY LEFT TURN
RIGHT TRAFFIC LANE CLOSURE - ONE LANE

APPENDIX "A"
SAN DIEGO REGIONAL STANDARD

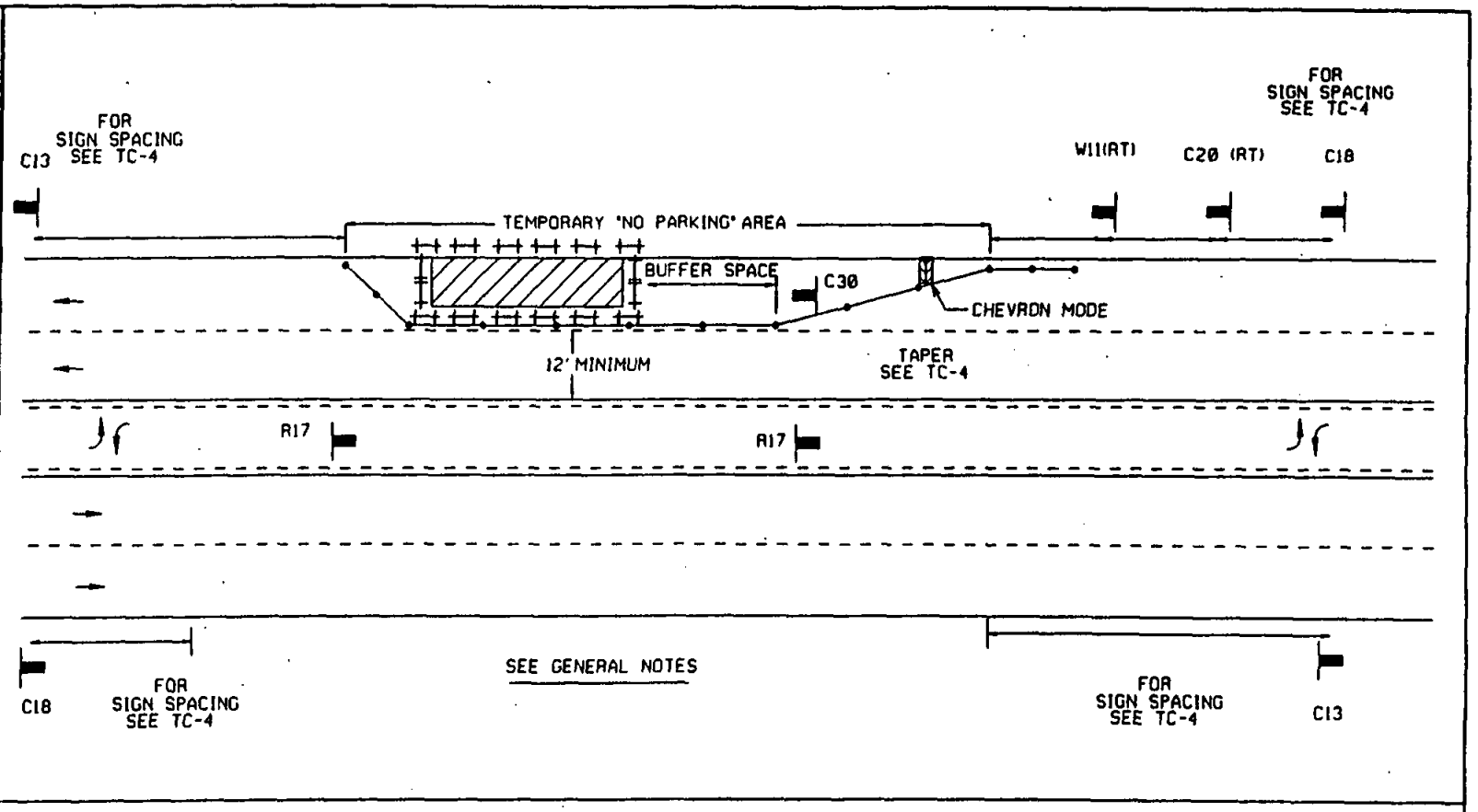

LEGEND

• CONE BARRICADE FLAGGER SIGN FLASHING ARROW SIGN WORK AREA TRAFFIC DIRECTION

AGENCY ENGINEER'S COMMENTS

AGENCY USE

POSTED SPEED LIMIT	APPROACH SPEED	TAPER LENGTH	SPACING OF CONES	SIGN SPACING

SEE TC-4 FOR SIGN, CONE SPACING AND TAPER LENGTH

GENERAL NOTES

For hours of darkness, change cones to vertical barricades with steady burn lights.

This plan DOES NOT apply at signalized or multi-way stop intersections. Consult the local jurisdiction when preparing Traffic Control Plans near these intersections.

This plan MAY NOT apply when the work areas affect bike lanes, sidewalks, pedestrian access, and curved or narrow roadways. Consult the approving agency when preparing the Traffic Control Plan for these areas.

Nothing contained on this drawing shall prevent local jurisdictions from modifying changing, or adopting new specifications deemed necessary. Criteria for position, location, and use of Traffic Control Devices is solely for the purpose of guidance to assist in the set up of the Traffic Control Plans.

TC-5 is required for all Traffic Control Plans.

APPLICANT USE

SUBMITTED BY:
NAME
COMPANY
ADDRESS
PHONE

Revision	By	Approved	Date
DRAWING	DWV		4-12
ORIG.	WAJ		6-1-92
			10-8-91
			7-24-91
			7-24-91
	DGB		4-15-85

Revision	By	Approved	Date
DRAWING ORIG.	DWV EMM		4-91
	DGB		8-16-91
	MMJ		11-18-91
			4-22-94
			9-15-95

CENTER OF ROAD WORK AREA

MULTILANE TRAFFIC CONTROL WITH TWO WAY LEFT TURN
RIGHT TRAFFIC LANE CLOSURE - TWO LANES

APPENDIX "A"
SAN DIEGO REGIONAL STANDARD

DRAWING NUMBER TC-17

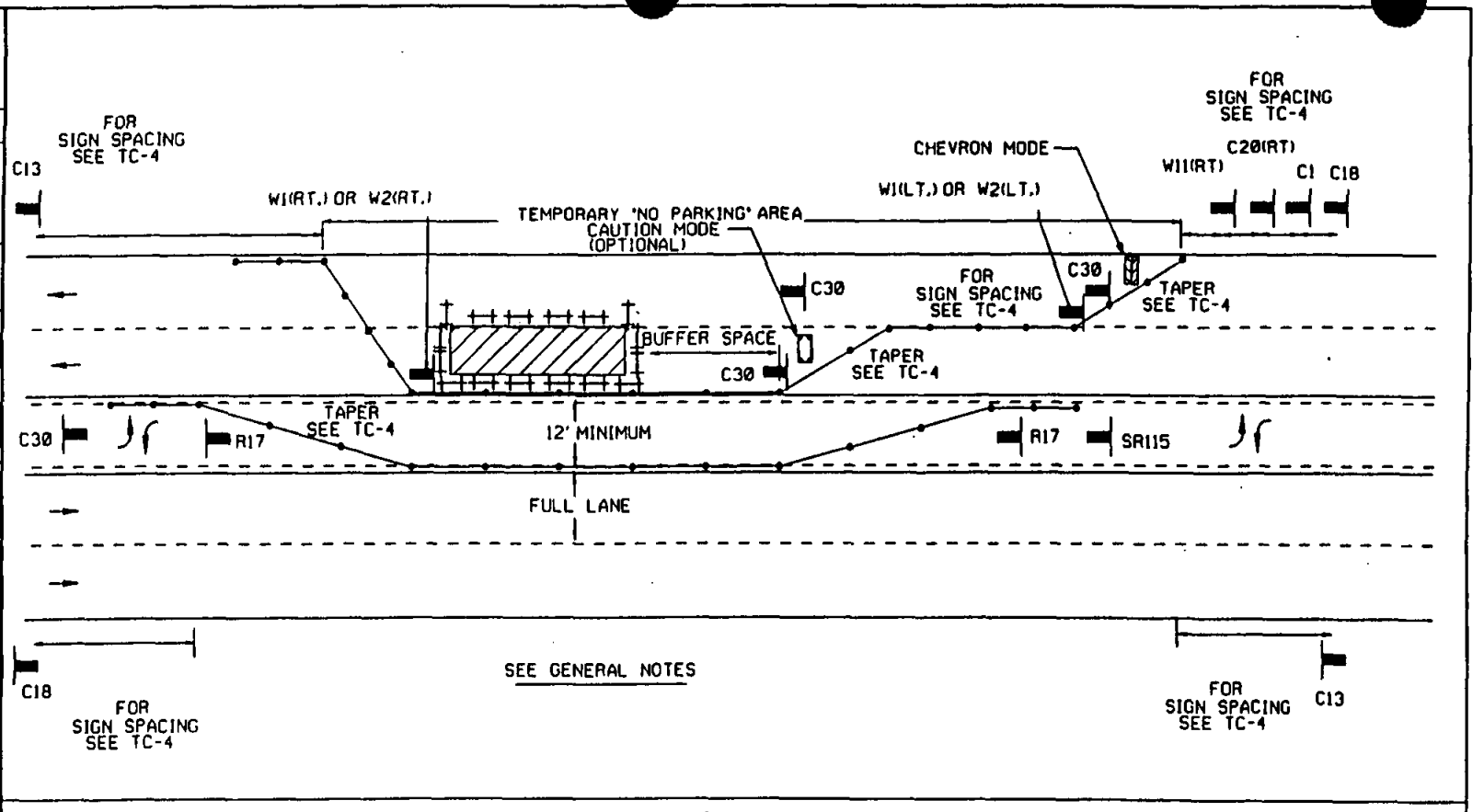

LEGEND

• CONE BARRICADE FLAGGER SIGN FLASHING ARROW SIGN WORK AREA TRAFFIC DIRECTION

AGENCY ENGINEER'S COMMENTS

AGENCY USE

POSTED SPEED LIMIT	APPROACH SPEED	TAPER LENGTH	SPACING OF CONES	SIGN SPACING

SEE TC-4 FOR SIGN, CONE SPACING AND TAPER LENGTH

GENERAL NOTES

For hours of darkness, change cones to vertical barricades with steady burn lights.

This plan DOES NOT apply at signalized or multi-way stop intersections. Consult the local jurisdiction when preparing Traffic Control Plans near these intersections.

This plan MAY NOT apply when the work areas affect bike lanes, sidewalks, pedestrian access, and curved or narrow roadways. Consult the approving agency when preparing the Traffic Control Plan for these areas.

Nothing contained on this drawing shall prevent local jurisdictions from modifying changing, or adopting new specifications deemed necessary. Criteria for position, location, and use of Traffic Control Devices is solely for the purpose of guidance to assist in the set up of the Traffic Control Plans.

TC-5 is required for all Traffic Control Plans.

APPLICANT USE

SUBMITTED BY:
NAME _____
COMPANY _____
ADDRESS _____
PHONE _____

DRAWING NUMBER TC-18

APPENDIX "A"
SAN DIEGO REGIONAL STANDARD

SIDE OF ROAD WORK AREA

MULTILANE TRAFFIC CONTROL WITH TWO WAY LEFT TURN
RIGHT TRAFFIC LANE CLOSURE - THREE LANES

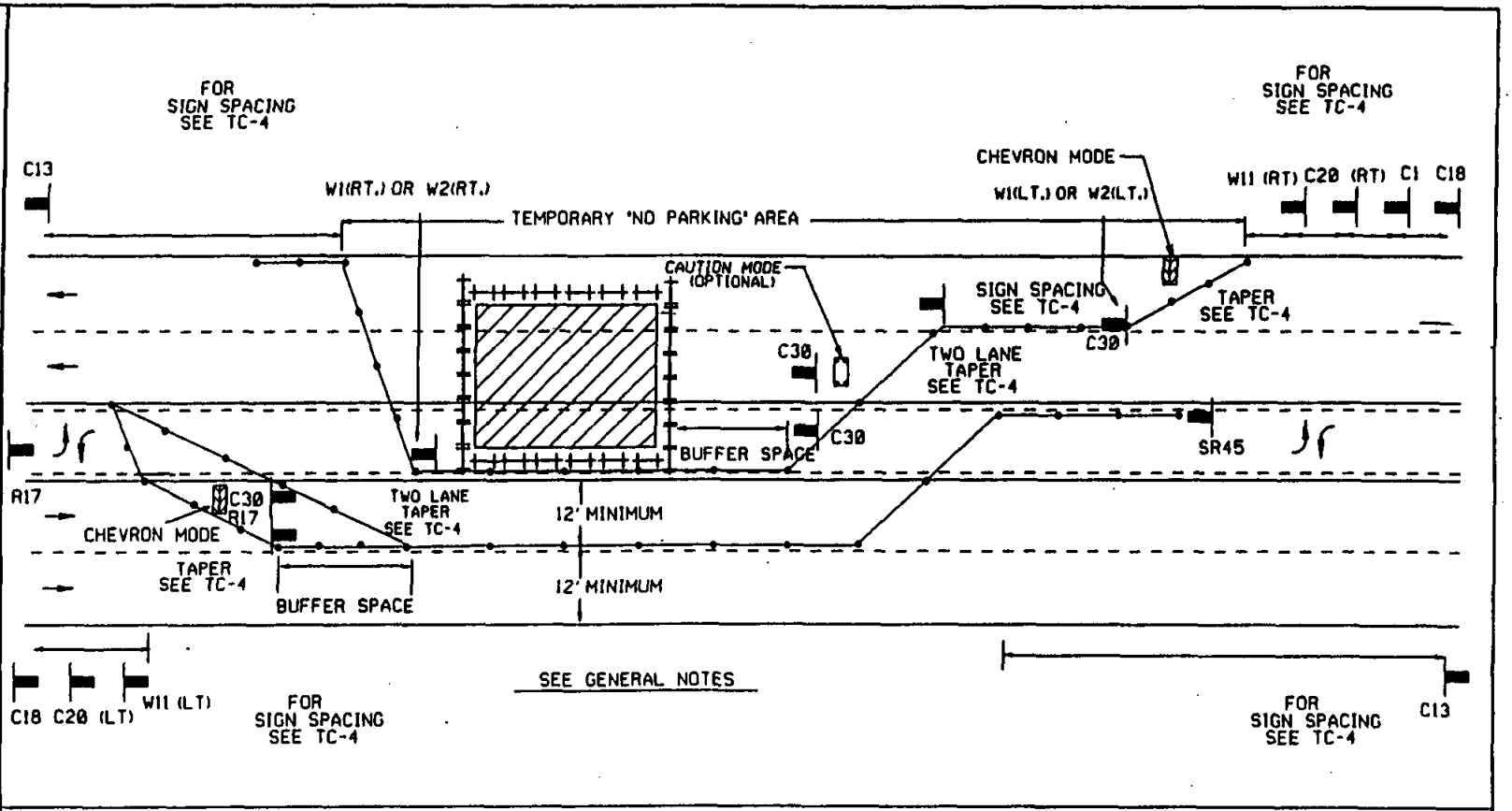

LEGEND

• CONE — BARRICADE — FLAGGER — SIGN — FLASHING ARROW SIGN — WORK AREA — TRAFFIC DIRECTION

AGENCY ENGINEER'S COMMENTS

AGENCY USE

POSTED SPEED LIMIT	APPROACH SPEED	TAPER LENGTH	SPACING OF CONES	SIGN SPACING

SEE TC-4 FOR SIGN, CONE SPACING AND TAPER LENGTH

GENERAL NOTES

For hours of darkness, change cones to vertical barricades with steady burn lights.

This plan DOES NOT apply at signalized or multi-way stop intersections. Consult the local jurisdiction when preparing Traffic Control Plans near these intersections.

This plan MAY NOT apply when the work areas affect bike lanes, sidewalks, pedestrian access, and curved or narrow roadways. Consult the approving agency when preparing the Traffic Control Plan for these areas.

Nothing contained on this drawing shall prevent local jurisdictions from modifying changing, or adopting new specifications deemed necessary. Criteria for position, location, and use of Traffic Control Devices is solely for the purpose of guidance to assist in the set up of the Traffic Control Plans.

TC-5 is required for all Traffic Control Plans.

APPLICANT USE

SUBMITTED BY:
NAME
COMPANY
ADDRESS
PHONE

Revision	By	Approved	Date
DRAWING	DWV FMM		4-91 8-91
ORIG.			10-9-91 11-18-91
	WAJ		9-23-94 4-23-95
	DGB		9-15-95

Revision	By	Approved	Date
DRAWING	DWN FMS		4-91
ORIG.	KWJ DGB		8-93
			10-4-94
			4-15-95

CENTER OF ROAD WORK AREA

MULTILANE TRAFFIC CONTROL WITH TWO WAY LEFT TURN

LEFT TRAFFIC LANE CLOSURE - TWO LANES

APPENDIX "A"

SAN DIEGO REGIONAL STANDARD

DRAWING NUMBER TC-19

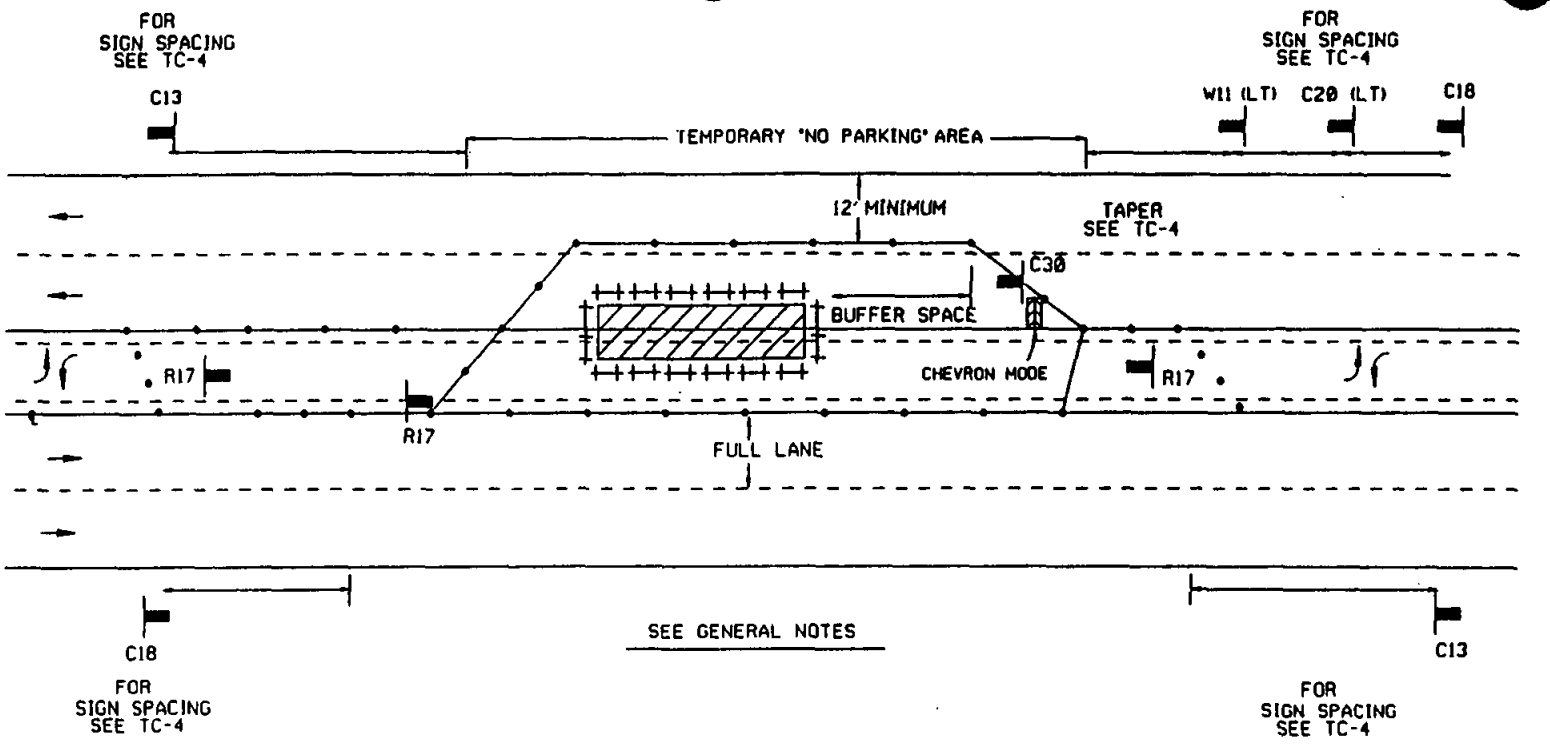

LEGEND

• CONE ++ BARRICADE FLAGGER SIGN FLASHING ARROW SIGN WORK AREA TRAFFIC DIRECTION

AGENCY ENGINEER'S COMMENTS

AGENCY USE

POSTED SPEED LIMIT	APPROACH SPEED	TAPER LENGTH	SPACING OF CONES	SIGN SPACING

SEE TC-4 FOR SIGN, CONE SPACING AND TAPER LENGTH

GENERAL NOTES

For hours of darkness, change cones to vertical barricades with steady burn lights.

This plan DOES NOT apply at signalized or multi-way stop intersections. Consult the local jurisdiction when preparing Traffic Control Plans near these intersections.

This plan MAY NOT apply when the work areas affect bike lanes, sidewalks, pedestrian access, and curved or narrow roadways. Consult the approving agency when preparing the Traffic Control Plan for these areas.

Nothing contained on this drawing shall prevent local jurisdictions from modifying changing, or adopting new specifications deemed necessary. Criteria for position, location, and use of Traffic Control Devices is solely for the purpose of guidance to assist in the set up of the Traffic Control Plans.

TC-5 is required for all Traffic Control Plans.

APPLICANT USE

SUBMITTED BY:

NAME _____

COMPANY _____

ADDRESS _____

PHONE _____

DRAWING NUMBER TC-20

CENTER OF ROAD WORK AREA

MULTILANE TRAFFIC CONTROL WITH CENTERLINE

LEFT LANE TRAFFIC LANE CLOSURE - THREE LANES

APPENDIX "A"

SAN DIEGO REGIONAL STANDARD

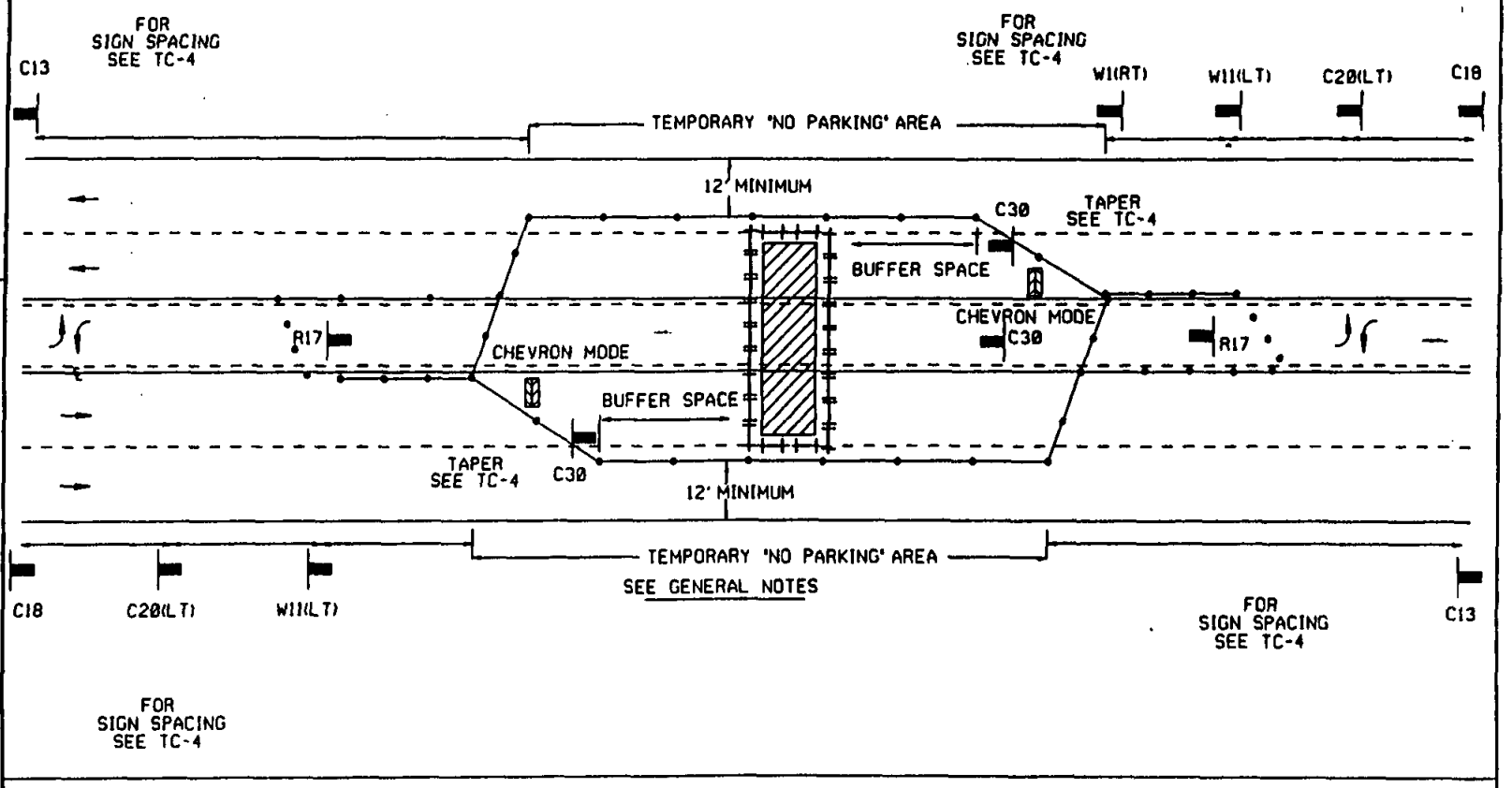

LEGEND

• CONE BARRICADE FLAGGER SIGN FLASHING ARROW SIGN WORK AREA TRAFFIC DIRECTION

AGENCY ENGINEER'S COMMENTS

AGENCY USE

POSTED SPEED LIMIT	APPROACH SPEED	TAPER LENGTH	SPACING OF CONES	SIGN SPACING

SEE TC-4 FOR SIGN, CONE SPACING AND TAPER LENGTH

GENERAL NOTES

For hours of darkness, change cones to vertical barricades with steady burn lights.

This plan DOES NOT apply at signalized or multi-way stop intersections. Consult the local jurisdiction when preparing Traffic Control Plans near these intersections.

This plan MAY NOT apply when the work areas affect bike lanes, sidewalks, *pedestrian access, and curved or narrow roadways. Consult the approving agency* when preparing the Traffic Control Plan for these areas.

Nothing contained on this drawing shall prevent local jurisdictions from modifying changing, or adopting new specifications deemed necessary. Criteria for position, location, and use of Traffic Control Devices is solely for the purpose of guidance to assist in the set up of the Traffic Control Plans.

TC-5 is required for all Traffic Control Plans.

APPLICANT USE

SUBMITTED BY:

NAME

COMPANY

ADDRESS

PHONE

Revision	By	Approved	Date
DRAWING	DWW		4-11
ORIG.	WAJ		10-8-91
	WAJ		8-23-94
	DGB		9-15-94

Revision	By	Approved	Date
DRAWING	DMA		4-91
DRAWING	KAP		8-20-94
ORIG.	DGB		4-25-95

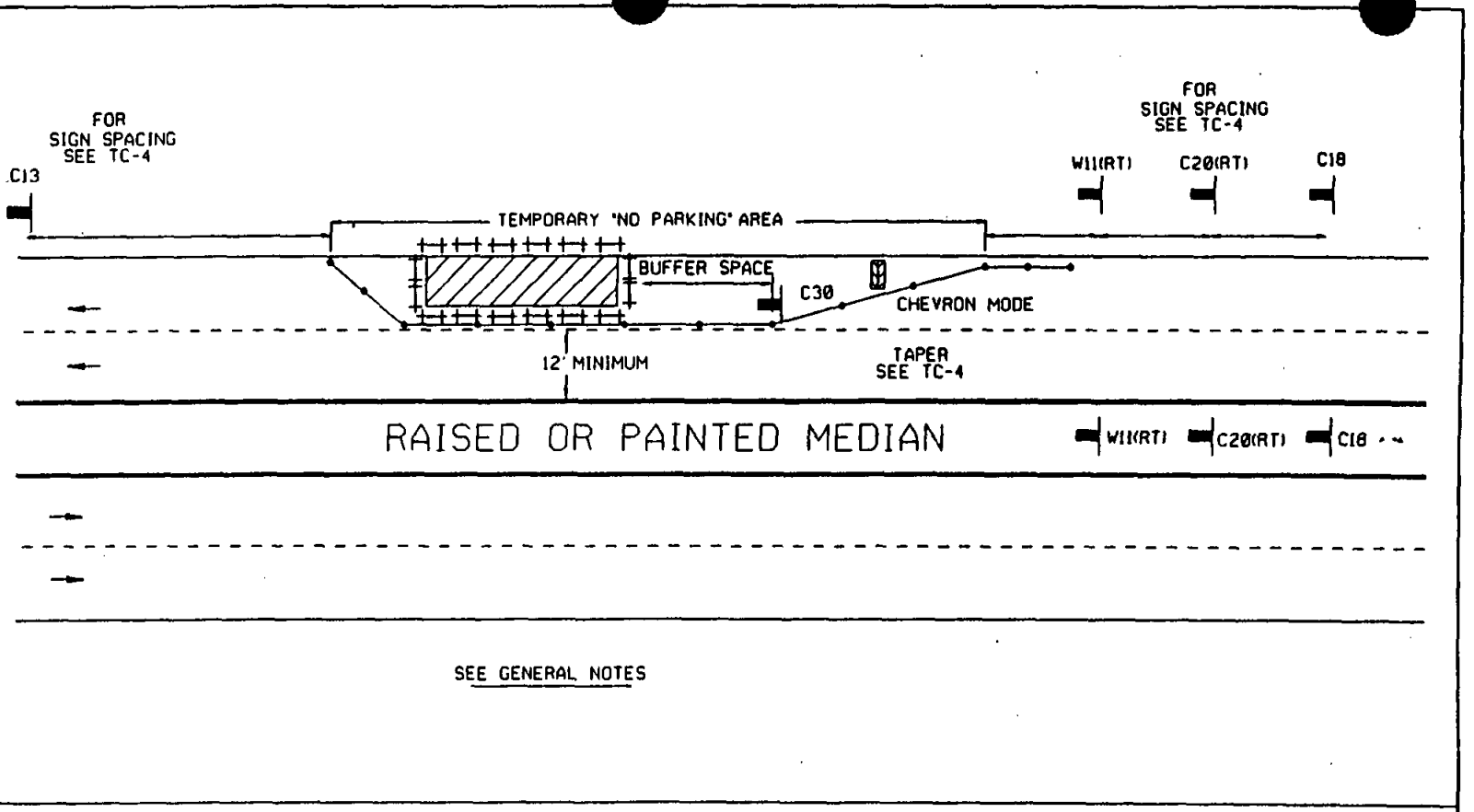

LEGEND

• CONE BARRICADE FLAGGER SIGN FLASHING ARROW SIGN WORK AREA TRAFFIC DIRECTION

AGENCY ENGINEER'S COMMENTS

AGENCY USE

POSTED SPEED LIMIT	APPROACH SPEED	TAPER LENGTH	SPACING OF CONES	SIGN SPACING

SEE TC-4 FOR SIGN, CONE SPACING AND TAPER LENGTH

GENERAL NOTES

For hours of darkness, change cones to vertical barricades with steady burn lights.

This plan DOES NOT apply at signalized or multi-way stop intersections. Consult the local jurisdiction when preparing Traffic Control Plans near these intersections.

This plan MAY NOT apply when the work areas affect bike lanes, sidewalks, pedestrian access, and curved or narrow roadways. Consult the approving agency when preparing the Traffic Control Plan for these areas.

Nothing contained on this drawing shall prevent local jurisdictions from modifying changing, or adopting new specifications deemed necessary. Criteria for position, location, and use of Traffic Control Devices is solely for the purpose of guidance to assist in the set up of the Traffic Control Plans.

TC-5 is required for all Traffic Control Plans.

APPLICANT USE

SUBMITTED BY:
NAME
COMPANY
ADDRESS
PHONE

SIDE OF ROAD WORK AREA

MULTILANE TRAFFIC CONTROL WITH RAISED MEDIAN
RIGHT TRAFFIC LANE CLOSURE - ONE LANE

APPENDIX "A"
SAN DIEGO REGIONAL STANDARD

DRAWING NUMBER TC-21

DRAWING NUMBER TC-22

CENTER OF ROAD WORK AREA

MULTILANE TRAFFIC CONTROL WITH RAISED MEDIAN
LEFT TRAFFIC LANE CLOSURE - ONE LANE

APPENDIX "A"
SAN DIEGO REGIONAL STANDARD

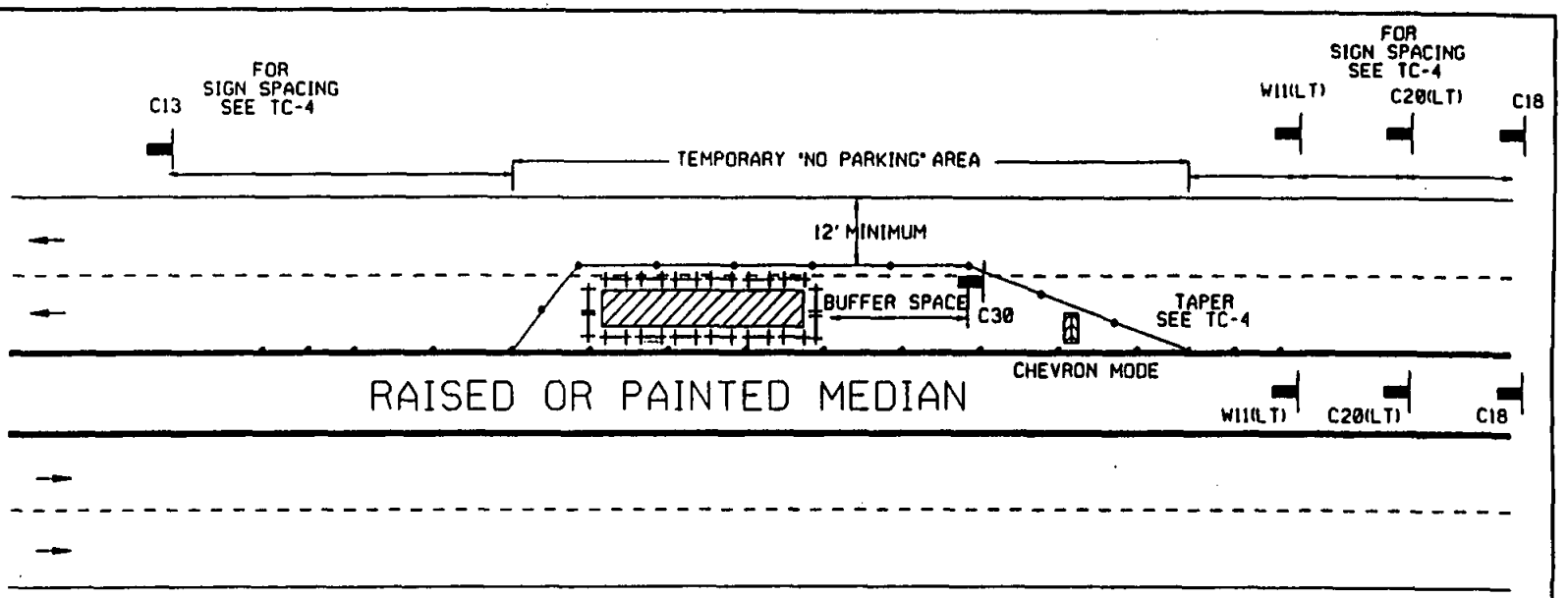

SEE GENERAL NOTES

LEGEND

• CONE ⊢⊣ BARRICADE FLAGGER SIGN FLASHING ARROW SIGN WORK AREA TRAFFIC DIRECTION

AGENCY ENGINEER'S COMMENTS

AGENCY USE

POSTED SPEED LIMIT	APPROACH SPEED	TAPER LENGTH	SPACING OF CONES	SIGN SPACING

SEE TC-4 FOR SIGN, CONE SPACING AND TAPER LENGTH

GENERAL NOTES

For hours of darkness, change cones to vertical barricades with steady burn lights.

This plan DOES NOT apply at signalized or multi-way stop intersections. Consult the local jurisdiction when preparing Traffic Control Plans near these intersections.

This plan MAY NOT apply when the work areas affect bike lanes, sidewalks, pedestrian access, and curved or narrow roadways. Consult the approving agency when preparing the Traffic Control Plan for these areas.

Nothing contained on this drawing shall prevent local jurisdictions from modifying changing, or adopting new specifications deemed necessary. Criteria for position, location, and use of Traffic Control Devices is solely for the purpose of guidance to assist in the set up of the Traffic Control Plans.

TC-5 is required for all Traffic Control Plans.

APPLICANT USE

SUBMITTED BY:
NAME
COMPANY
ADDRESS
PHONE

Revision	By	Approved	Date
DRAWING	DBW PWM		4-91
ORIG.			6-91
			8-92
			4-95
			9-95

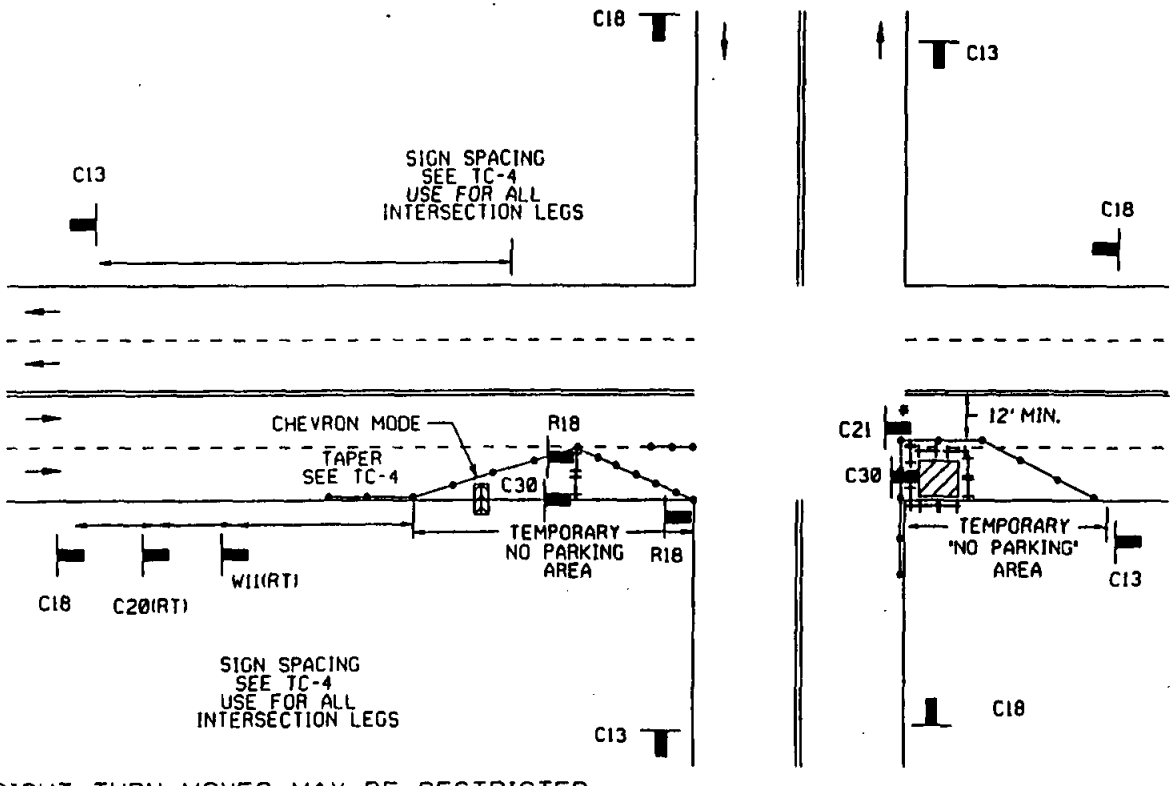

* LEFT OR RIGHT TURN MOVES MAY BE RESTRICTED.

LEGEND

• CONE BARRICADE FLAGGER SIGN FLASHING ARROW SIGN WORK AREA TRAFFIC DIRECTION

AGENCY ENGINEER'S COMMENTS

AGENCY USE

POSTED SPEED LIMIT	APPROACH SPEED	TAPER LENGTH	SPACING OF CONES	SIGN SPACING

SEE TC-4 FOR SIGN, CONE SPACING AND TAPER LENGTH

GENERAL NOTES

For hours of darkness, change cones to vertical barricades with steady burn lights.

Consult the local jurisdiction when preparing Traffic Control Plans near these intersections.

This plan MAY NOT apply when the work areas affect bike lanes, sidewalks, pedestrian access, and curved or narrow roadways. Consult the approving agency when preparing the Traffic Control Plan for these areas.

Nothing contained on this drawing shall prevent local jurisdictions from modifying changing, or adopting new specifications deemed necessary. Criteria for position, location, and use of Traffic Control Devices is solely for the purpose of guidance to assist in the set up of the Traffic Control Plans.

TC-5 is required for all Traffic Control Plans.

APPLICANT USE

SUBMITTED BY:
NAME
COMPANY
ADDRESS
PHONE

Revision	By	Approved	Date
DRAWING	DWV EMM		4-91 8-91
ORIG.			10-8-91 4-2-92
	WAJ		8-30-94 4-25-95
	DGB		9-15-95

APPENDIX "A"
SAN DIEGO REGIONAL STANDARD

SIDE OF ROAD WORK AREA

INTERSECTION TRAFFIC CONTROL

DRAWING NUMBER TC-23

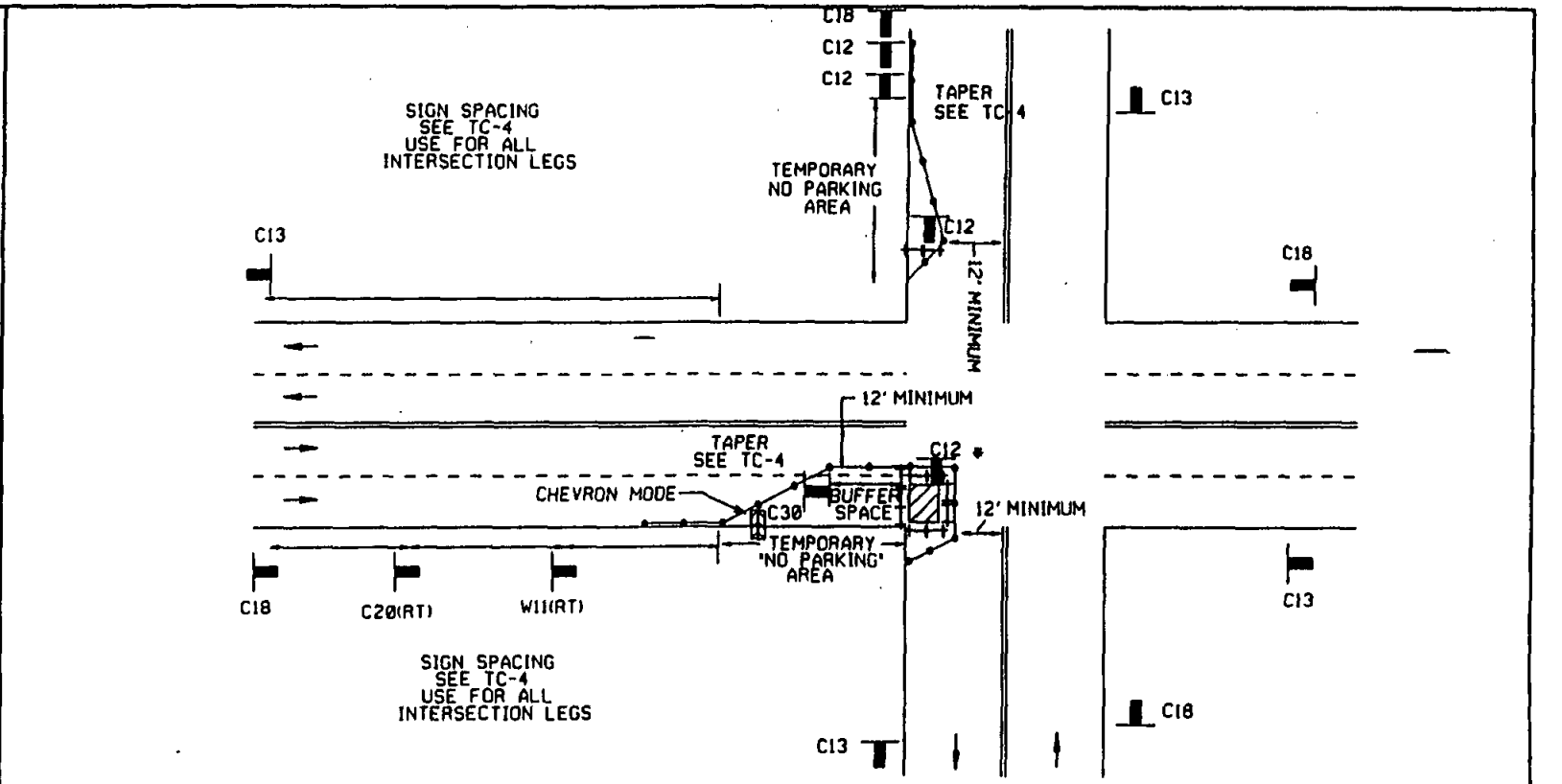

* RIGHT TURN MOVES MAY BE RESTRICTED.

LEGEND

• CONE ⊢⊣ BARRICADE FLAGGER SIGN FLASHING ARROW SIGN WORK AREA TRAFFIC DIRECTION

AGENCY ENGINEER'S COMMENTS

AGENCY USE

POSTED SPEED LIMIT	APPROACH SPEED	TAPER LENGTH	SPACING OF CONES	SIGN SPACING

SEE TC-4 FOR SIGN, CONE SPACING AND TAPER LENGTH

GENERAL NOTES

For hours of darkness, change cones to vertical barricades with steady burn lights.

Consult the local jurisdiction when preparing Traffic Control Plans near these intersections.

This plan MAY NOT apply when the work areas affect bike lanes, sidewalks, pedestrian access, and curved or narrow roadways. Consult the approving agency when preparing the Traffic Control Plan for these areas.

Nothing contained on this drawing shall prevent local jurisdictions from modifying changing, or adopting new specifications deemed necessary. Criteria for position, location, and use of Traffic Control Devices is solely for the purpose of guidance to assist in the set up of the Traffic Control Plans.

TC-5 is required for all Traffic Control Plans.

APPLICANT USE

SUBMITTED BY:
NAME _____
COMPANY _____
ADDRESS _____
PHONE _____

APPENDIX "A"
SAN DIEGO REGIONAL STANDARD

SIDE OF ROAD WORK AREA

INTERSECTION TRAFFIC CONTROL

DRAWING NUMBER TC-24

Revision	By	Approved	Date
DRAWING	DVV FHM		4-91 8-91
ORIG.	WAJ		10-8-91 8-30-94
	DGB		4-25-95 4-25-95

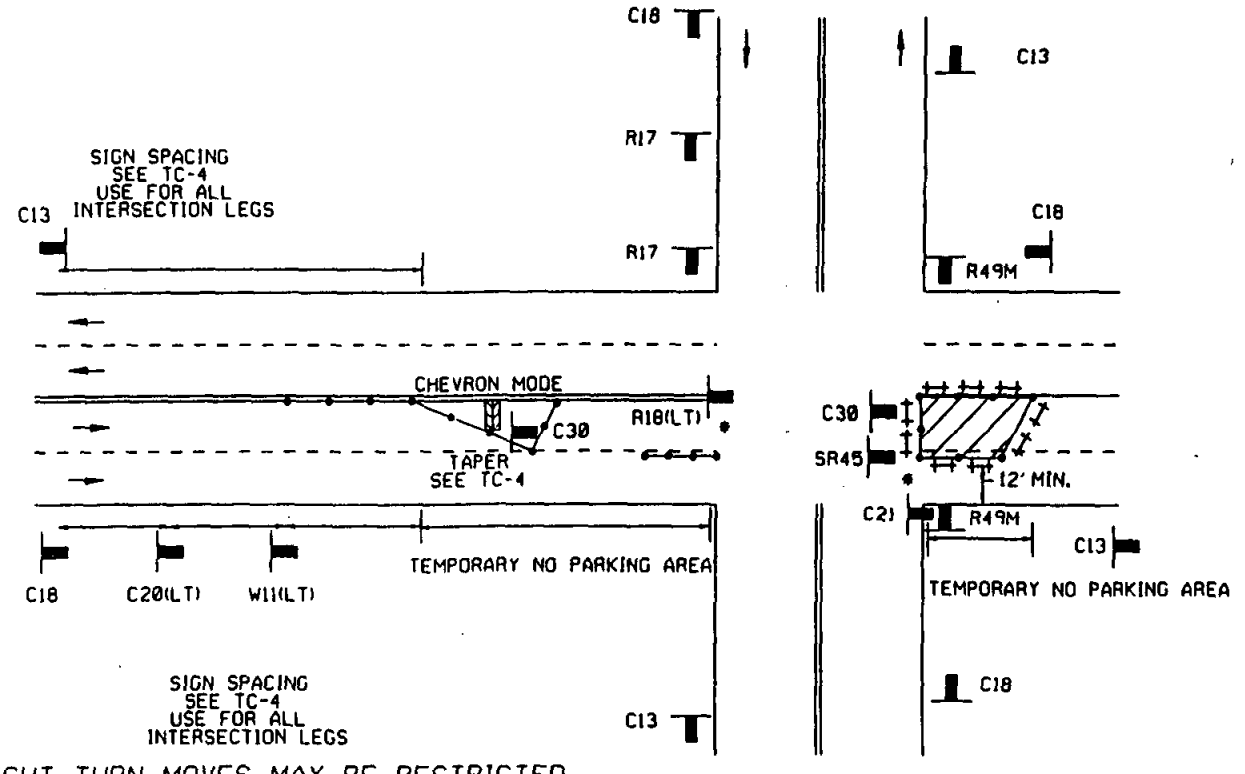

* LEFT OR RIGHT TURN MOVES MAY BE RESTRICTED.

LEGEND

• CONE BARRICADE FLAGGER SIGN FLASHING ARROW SIGN WORK AREA TRAFFIC DIRECTION

AGENCY ENGINEER'S COMMENTS

AGENCY USE

POSTED SPEED LIMIT	APPROACH SPEED	TAPER LENGTH	SPACING OF CONES	SIGN SPACING

SEE TC-4 FOR SIGN, CONE SPACING AND TAPER LENGTH

GENERAL NOTES

For hours of darkness, change cones to vertical barricades with steady burn lights.

Consult the local jurisdiction when preparing Traffic Control Plans near these intersections.

This plan MAY NOT apply when the work areas affect bike lanes, sidewalks, pedestrian access, and curved or narrow roadways. Consult the approving agency when preparing the Traffic Control Plan for these areas.

Nothing contained on this drawing shall prevent local jurisdictions from modifying changing, or adopting new specifications deemed necessary. Criteria for position, location, and use of Traffic Control Devices is solely for the purpose of guidance to assist in the set up of the Traffic Control Plans.

TC-5 is required for all Traffic Control Plans.

APPLICANT USE

SUBMITTED BY:
NAME
COMPANY
ADDRESS
PHONE

Revision	By	Approved	Date
DRAWING	DWV FMM		4-91 8-91
ORIG.	WAJ		18-8-91 4-2-92 8-30-94 4-25-95
	DGB		9-15-95

APPENDIX "A"
SAN DIEGO REGIONAL STANDARD

CENTER OF ROAD WORK AREA

INTERSECTION TRAFFIC CONTROL

DRAWING NUMBER TC-25

DRAWING NUMBER TC-26

CENTER OF ROAD WORK AREA

INTERSECTION TRAFFIC CONTROL

APPENDIX "A"
SAN DIEGO REGIONAL STANDARD

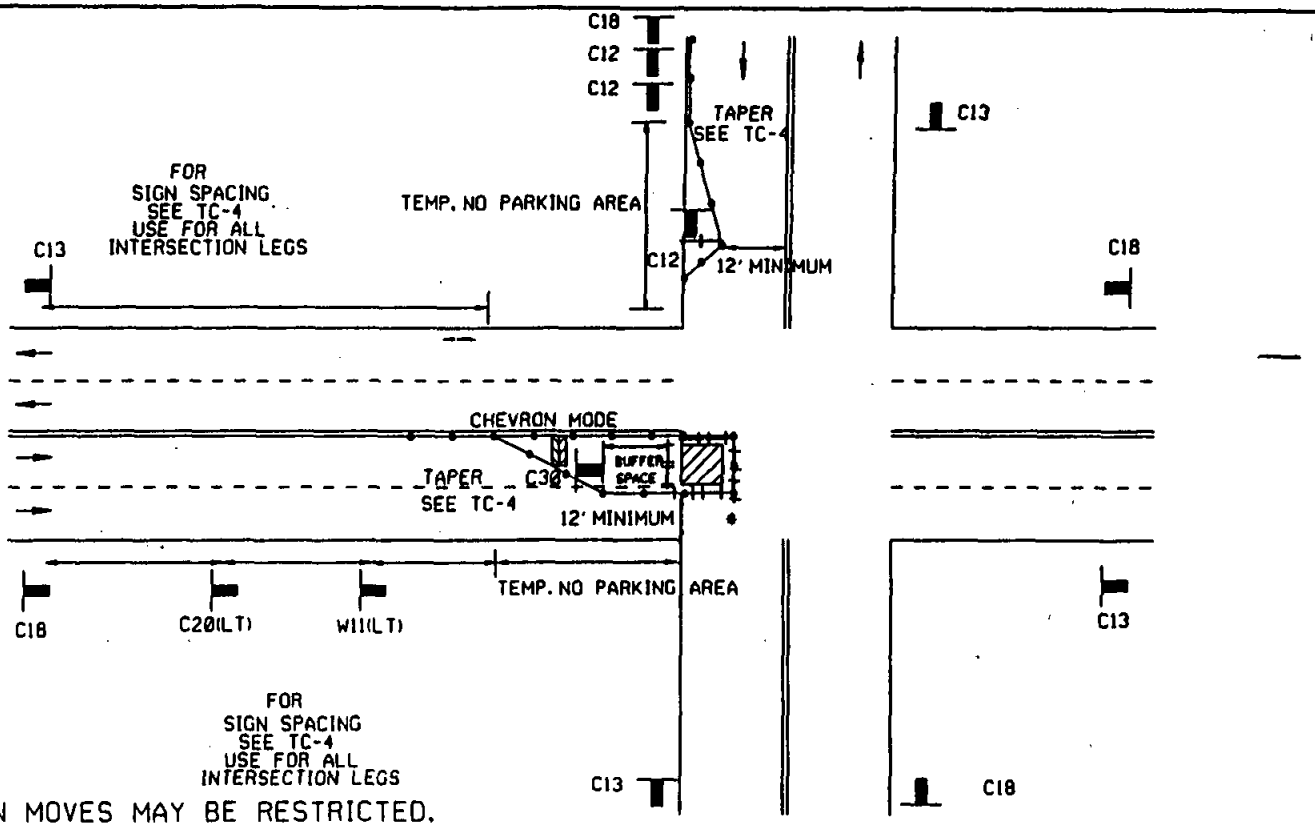

* LEFT TURN MOVES MAY BE RESTRICTED.

LEGEND

• CONE — BARRICADE — FLAGGER — SIGN — FLASHING ARROW SIGN — WORK AREA — TRAFFIC DIRECTION

AGENCY ENGINEER'S COMMENTS

AGENCY USE

POSTED SPEED LIMIT	APPROACH SPEED	TAPER LENGTH	SPACING OF CONES	SIGN SPACING

SEE TC-4 FOR SIGN, CONE SPACING AND TAPER LENGTH

APPLICANT USE

SUBMITTED BY:
NAME
COMPANY
ADDRESS
PHONE

GENERAL NOTES

For hours of darkness, change cones to vertical barricades with steady burn lights.

Consult the local jurisdiction when preparing Traffic Control Plans near these intersections.

This plan MAY NOT apply when the work areas affect bike lanes, sidewalks, pedestrian access, and curved or narrow roadways. Consult the approving agency when preparing the Traffic Control Plan for these areas.

Nothing contained on this drawing shall prevent local jurisdictions from modifying changing, or adopting new specifications deemed necessary. Criteria for position, location, and use of Traffic Control Devices is solely for the purpose of guidance to assist in the set up of the Traffic Control Plans.

TC-5 is required for all Traffic Control Plans.

Revision	By	Approved	Date
DRAWING	DWV FMM		4-91 8-91
ORIG.			10-8-91 11-18-91
	WAJ		9-30-94 4-25-95
	DGB		9-15-95

Revision	By	Approved	Date
DRAWING	DWV FMM		4-91 8-91
ORIG.	WAJ		10-8-91 9-23-94
	DGB		4-25-95 9-15-95

CENTER OF ROAD WORK AREA

INTERSECTION TRAFFIC CONTROL

APPENDIX "A"
SAN DIEGO REGIONAL STANDARD

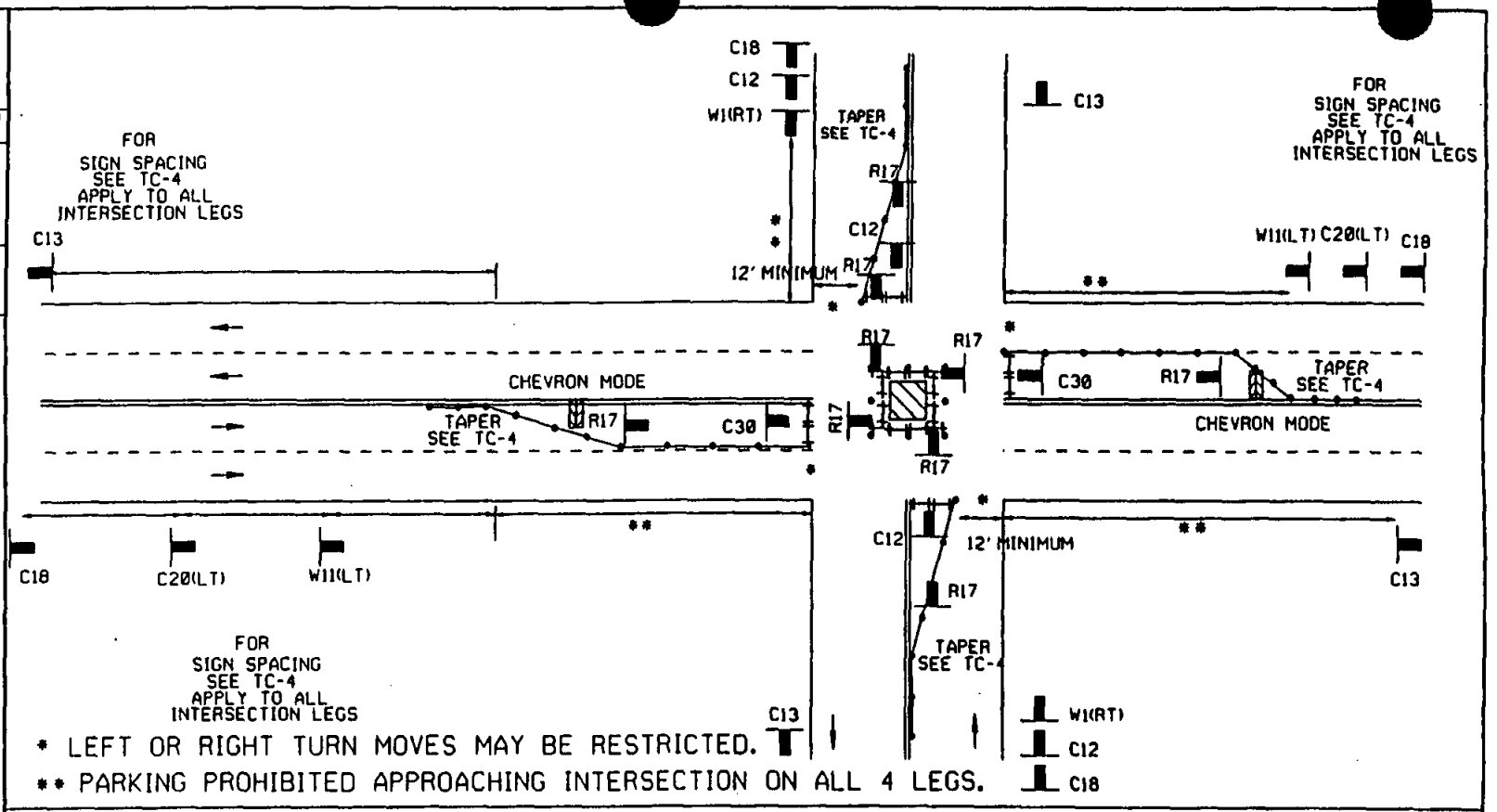

* LEFT OR RIGHT TURN MOVES MAY BE RESTRICTED.

** PARKING PROHIBITED APPROACHING INTERSECTION ON ALL 4 LEGS.

LEGEND

• CONE — BARRICADE — FLAGGER — SIGN — FLASHING ARROW SIGN — WORK AREA — TRAFFIC DIRECTION

AGENCY ENGINEER'S COMMENTS

AGENCY USE

POSTED SPEED LIMIT	APPROACH SPEED	TAPER LENGTH	SPACING OF CONES	SIGN SPACING

SEE TC-4 FOR SIGN, CONE SPACING AND TAPER LENGTH

GENERAL NOTES

For hours of darkness, change cones to vertical barricades with steady burn lights.

Consult the local jurisdiction when preparing Traffic Control Plans near these intersections.

This plan MAY NOT apply when the work areas affect bike lanes, sidewalks, pedestrian access, and curved or narrow roadways. Consult the approving agency when preparing the Traffic Control Plan for these areas.

Nothing contained on this drawing shall prevent local jurisdictions from modifying changing, or adopting new specifications deemed necessary. Criteria for position, location, and use of Traffic Control Devices is solely for the purpose of guidance to assist in the set up of the Traffic Control Plans.

TC-5 is required for all Traffic Control Plans.

APPLICANT USE

SUBMITTED BY:
NAME _____
COMPANY _____
ADDRESS _____
PHONE _____

DRAWING NUMBER TC-27

DRAWING NUMBER TC-28

APPENDIX "A"
SAN DIEGO REGIONAL STANDARD

SIDE OF ROAD WORK AREA

INTERSECTION TRAFFIC CONTROL

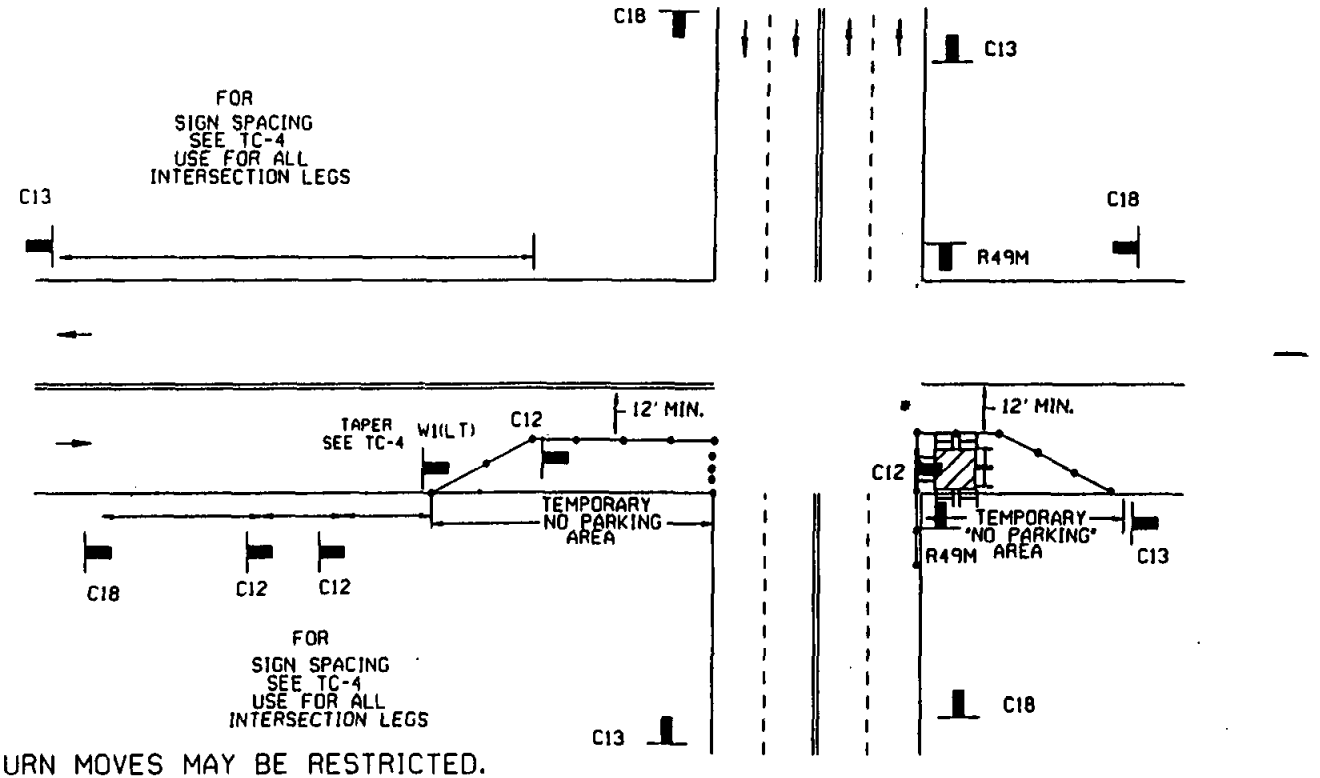

* RIGHT TURN MOVES MAY BE RESTRICTED.

LEGEND

• CONE | BARRICADE | FLAGGER | SIGN | FLASHING ARROW SIGN | WORK AREA | TRAFFIC DIRECTION

AGENCY ENGINEER'S COMMENTS

AGENCY USE

POSTED SPEED LIMIT	APPROACH SPEED	TAPER LENGTH	SPACING OF CONES	SIGN SPACING

SEE TC-4 FOR SIGN, CONE SPACING AND TAPER LENGTH

GENERAL NOTES

For hours of darkness, change cones to vertical barricades with steady burn lights.

Consult the local jurisdiction when preparing Traffic Control Plans near these intersections.

This plan MAY NOT apply when the work areas affect bike lanes, sidewalks, pedestrian access, and curved or narrow roadways. Consult the approving agency when preparing the Traffic Control Plan for these areas.

Nothing contained on this drawing shall prevent local jurisdictions from modifying changing, or adopting new specifications deemed necessary. Criteria for position, location, and use of Traffic Control Devices is solely for the purpose of guidance to assist in the set up of the Traffic Control Plans.

TC-5 is required for all Traffic Control Plans.

APPLICANT USE

SUBMITTED BY:
NAME
COMPANY
ADDRESS
PHONE

Revision	By	Approved	Date
DRAWING	DWV FMM		4-91 8-91
ORIG.	WAJ	[signature]	10-8-91 8-30-94
	DGR	[signature]	4-25-95 9-15-95

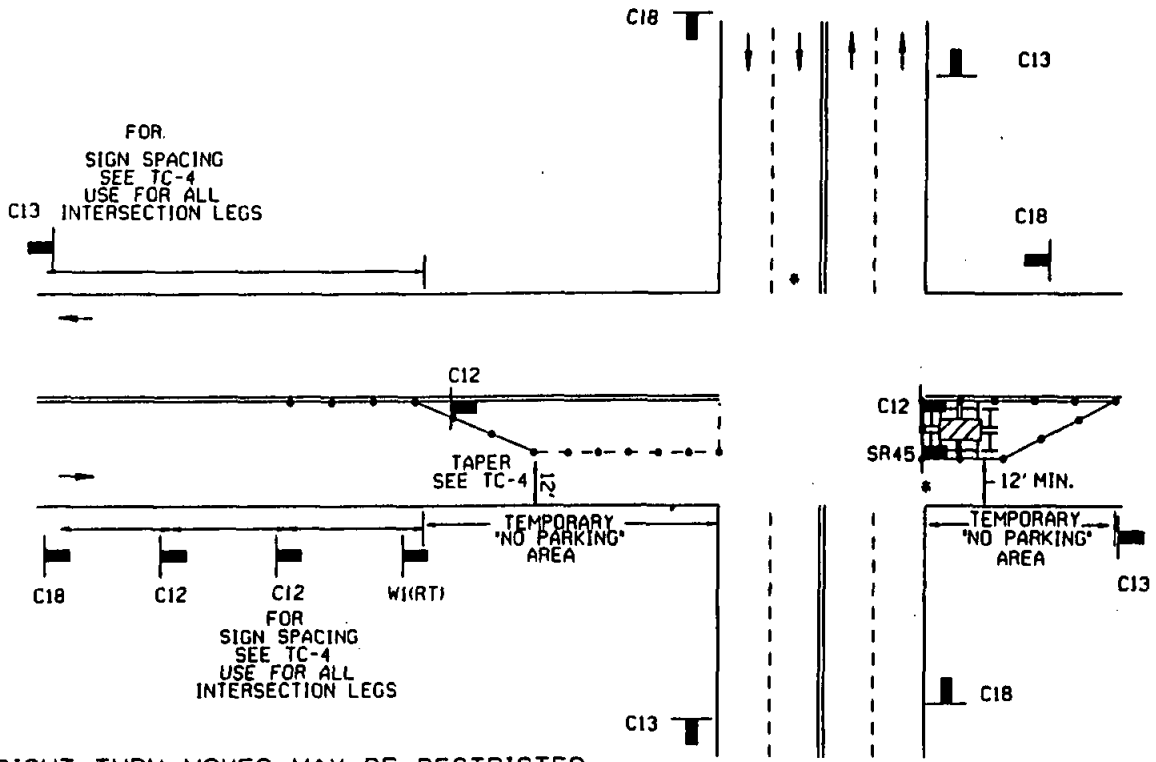

* LEFT OR RIGHT TURN MOVES MAY BE RESTRICTED.

LEGEND

• CONE | BARRICADE | FLAGGER | SIGN | FLASHING ARROW SIGN | WORK AREA | TRAFFIC DIRECTION

AGENCY ENGINEER'S COMMENTS

AGENCY USE

POSTED SPEED LIMIT	APPROACH SPEED	TAPER LENGTH	SPACING OF CONES	SIGN SPACING

SEE TC-4 FOR SIGN, CONE SPACING AND TAPER LENGTH

GENERAL NOTES

For hours of darkness, change cones to vertical barricades with steady burn lights.

Consult the local jurisdiction when preparing Traffic Control Plans near these intersections.

This plan MAY NOT apply when the work areas affect bike lanes, sidewalks, pedestrian access, and curved or narrow roadways. Consult the approving agency when preparing the Traffic Control Plan for these areas.

Nothing contained on this drawing shall prevent local jurisdictions from modifying changing, or adopting new specifications deemed necessary. Criteria for position, location, and use of Traffic Control Devices is solely for the purpose of guidance to assist in the set up of the Traffic Control Plans.

TC-5 is required for all Traffic Control Plans.

APPLICANT USE

SUBMITTED BY:
NAME
COMPANY
ADDRESS
PHONE

Revision	By	Approved	Date
DRAWING	DWV		4-91
	FHM		8-91
ORIG.	WAJ		10-8-91
			9-23-94
	DGB		4-25-95
			9-15-95

APPENDIX "A"
SAN DIEGO REGIONAL STANDARD

CENTER OF ROAD WORK AREA

INTERSECTION TRAFFIC CONTROL

DRAWING NUMBER TC-29

DRAWING NUMBER TC-30

SIDE OF ROAD WORK AREA

INTERSECTION TRAFFIC CONTROL

APPENDIX "A"
SAN DIEGO REGIONAL STANDARD

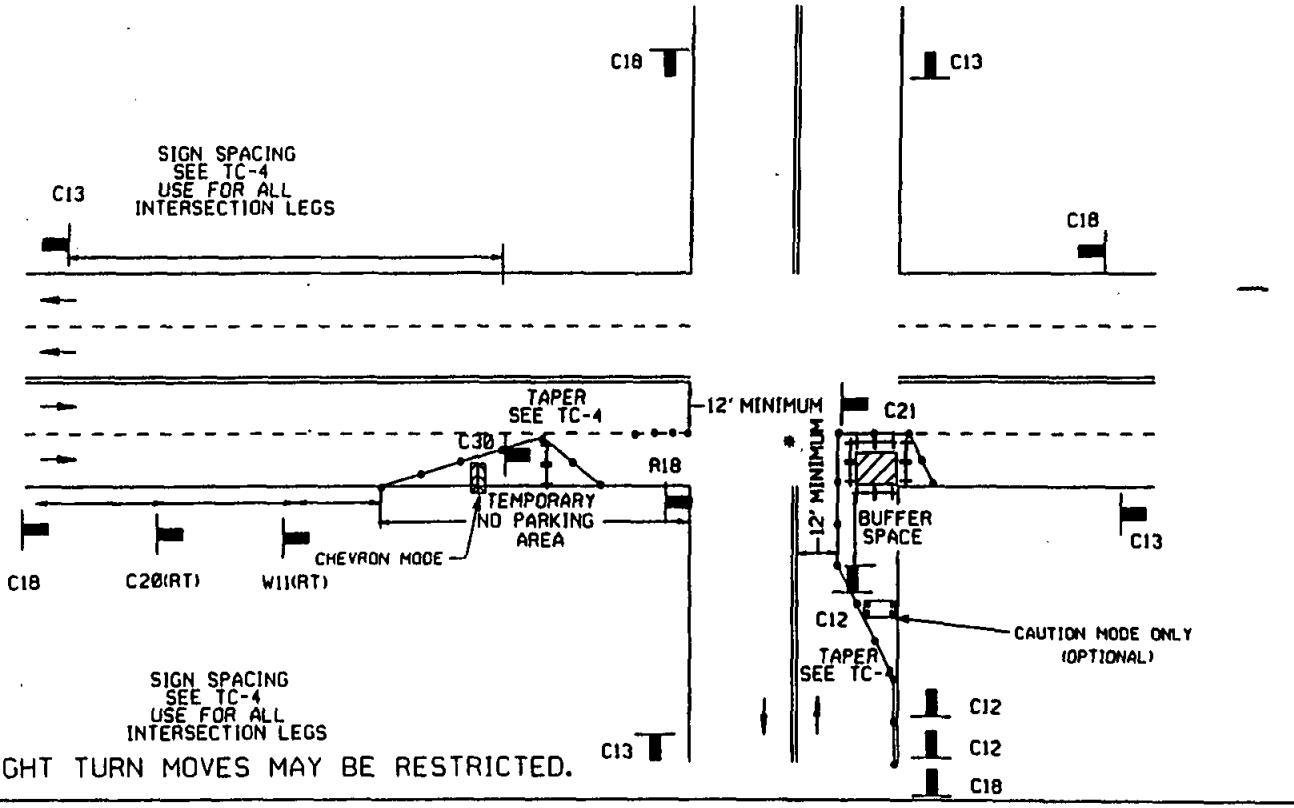

* LEFT OR RIGHT TURN MOVES MAY BE RESTRICTED.

LEGEND

• CONE BARRICADE FLAGGER SIGN FLASHING ARROW SIGN WORK AREA TRAFFIC DIRECTION

AGENCY ENGINEER'S COMMENTS

AGENCY USE

POSTED SPEED LIMIT	APPROACH SPEED	TAPER LENGTH	SPACING OF CONES	SIGN SPACING

SEE TC-4 FOR SIGN, CONE SPACING AND TAPER LENGTH

APPLICANT USE

SUBMITTED BY:
NAME
COMPANY
ADDRESS
PHONE

GENERAL NOTES

For hours of darkness, change cones to vertical barricades with steady burn lights.

Consult the local jurisdiction when preparing Traffic Control Plans near these intersections.

This plan MAY NOT apply when the work areas affect bike lanes, sidewalks, pedestrian access, and curved or narrow roadways. Consult the approving agency when preparing the Traffic Control Plan for these areas.

Nothing contained on this drawing shall prevent local jurisdictions from modifying changing, or adopting new specifications deemed necessary. Criteria for position, location, and use of Traffic Control Devices is solely for the purpose of guidance to assist in the set up of the Traffic Control Plans.

TC-5 is required for all Traffic Control Plans.

Revision	By	Approved	Date
DRAWING	DWV		4-91
ORIG.	WAJ	[signature]	10-8-91
	DGB	[signature]	4-25-94
			4-15-95

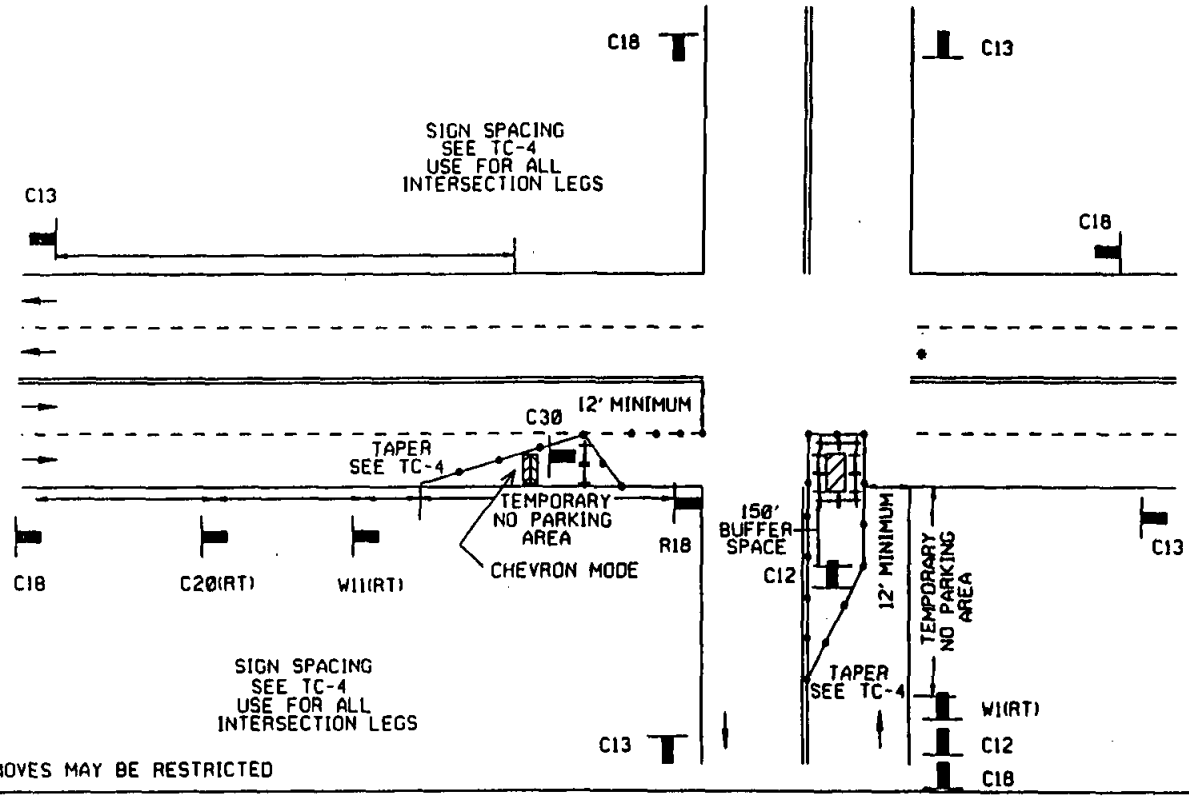

* LEFT TURN MOVES MAY BE RESTRICTED

LEGEND

• CONE — BARRICADE — FLAGGER — SIGN — FLASHING ARROW SIGN — WORK AREA — TRAFFIC DIRECTION

POSTED SPEED LIMIT	APPROACH SPEED	TAPER LENGTH	SPACING OF CONES	SIGN SPACING

SEE TC-4 FOR SIGN, CONE SPACING AND TAPER LENGTH

GENERAL NOTES

For hours of darkness, change cones to vertical barricades with steady burn lights.

Consult the local jurisdiction when preparing Traffic Control Plans near these intersections.

This plan MAY NOT apply when the work areas affect bike lanes, sidewalks, pedestrian access, and curved or narrow roadways. Consult the approving agency when preparing the Traffic Control Plan for these areas.

Nothing contained on this drawing shall prevent local jurisdictions from modifying changing, or adopting new specifications deemed necessary. Criteria for position, location, and use of Traffic Control Devices is solely for the purpose of guidance to assist in the set up of the Traffic Control Plans.

TC-5 is required for all Traffic Control Plans.

AGENCY ENGINEER'S COMMENTS

AGENCY USE

APPLICANT USE

SUBMITTED BY:
NAME
COMPANY
ADDRESS
PHONE

Revision	By	Approved	Date
DRAWING	DWV		4-91
	FMM		8-91
ORIG.	WAJ		10-8-91
			9-23-94
	DGB		4-25-95
			9-15-95

APPENDIX "A"
SAN DIEGO REGIONAL STANDARD

CENTER OF ROAD WORK AREA

INTERSECTION TRAFFIC CONTROL

DRAWING NUMBER TC-31

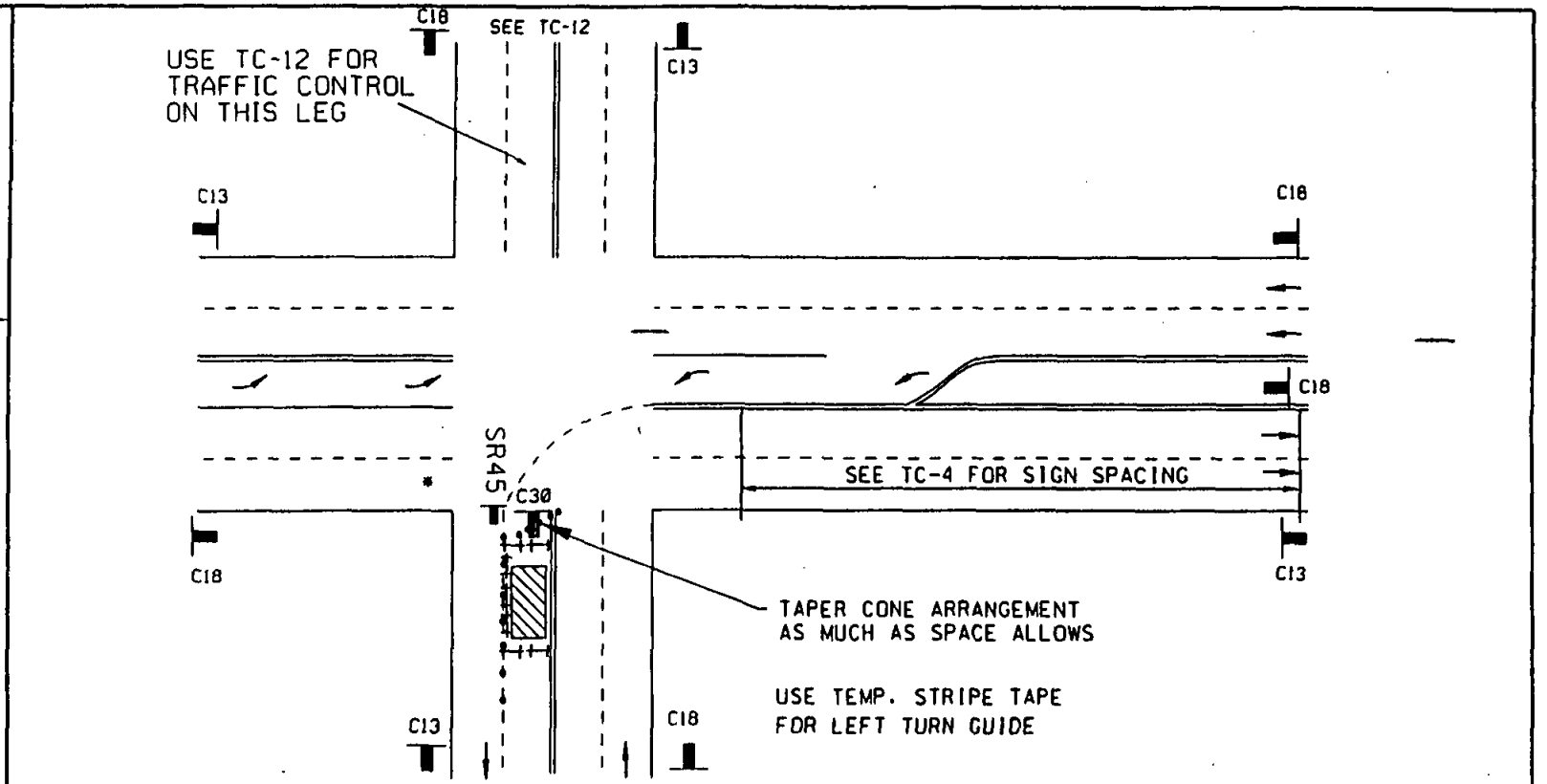

* RIGHT TURN MOVES MAY BE RESTRICTED

LEGEND

• CONE BARRICADE FLAGGER SIGN FLASHING ARROW SIGN WORK AREA TRAFFIC DIRECTION

AGENCY ENGINEER'S COMMENTS

AGENCY USE

POSTED SPEED LIMIT	APPROACH SPEED	TAPER LENGTH	SPACING OF CONES	SIGN SPACING

SEE TC-4 FOR SIGN, CONE SPACING AND TAPER LENGTH

GENERAL NOTES

For hours of darkness, change cones to vertical barricades with steady burn lights.

Consult the local jurisdiction when preparing Traffic Control Plans near these intersections.

This plan MAY NOT apply when the work areas affect bike lanes, sidewalks, pedestrian access, and curved or narrow roadways. Consult the approving agency when preparing the Traffic Control Plan for these areas.

Nothing contained on this drawing shall prevent local jurisdictions from modifying changing, or adopting new specifications deemed necessary. Criteria for position, location, and use of Traffic Control Devices is solely for the purpose of guidance to assist in the set up of the Traffic Control Plans.

TC-5 is required for all Traffic Control Plans.

APPLICANT USE

SUBMITTED BY:
NAME
COMPANY
ADDRESS
PHONE

Revision	By	Approved	Date
DRAWING	TRD		5-31-94
	WAJ	[signature]	6-30-94
	DGB	[signature]	4-25-95
			4-15-95

APPENDIX "A"
SAN DIEGO REGIONAL STANDARD

SIDE OF ROAD WORK AREA

LEFT TURN INTERSECTION TRAFFIC CONTROL

DRAWING NUMBER TC-32

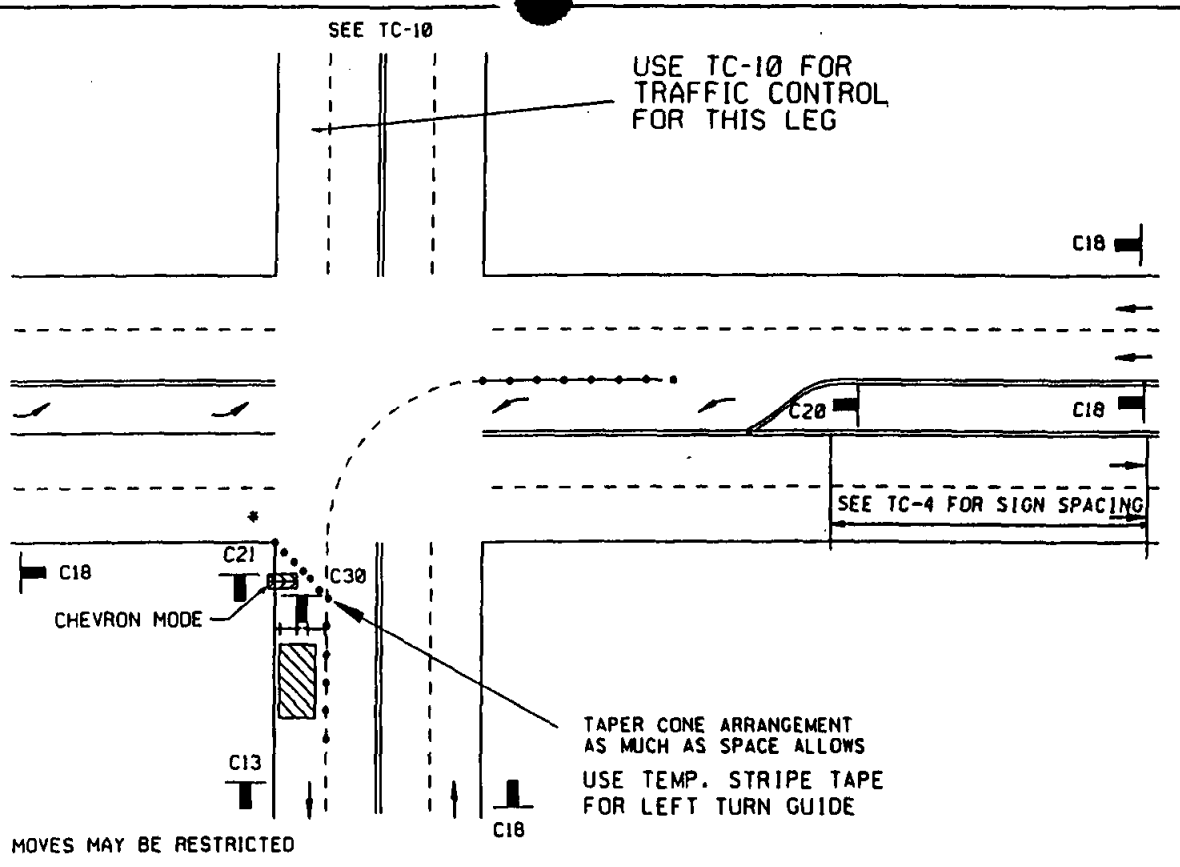

LEGEND

• CONE — BARRICADE — FLAGGER — SIGN — FLASHING ARROW SIGN — WORK AREA — TRAFFIC DIRECTION

AGENCY ENGINEER'S COMMENTS

AGENCY USE

POSTED SPEED LIMIT	APPROACH SPEED	TAPER LENGTH	SPACING OF CONES	SIGN SPACING

SEE TC-4 FOR SIGN, CONE SPACING AND TAPER LENGTH

GENERAL NOTES

For hours of darkness, change cones to vertical barricades with steady burn lights.

Consult the local jurisdiction when preparing Traffic Control Plans near these intersections.

This plan MAY NOT apply when the work areas affect bike lanes, sidewalks, pedestrian access, and curved or narrow roadways. Consult the approving agency when preparing the Traffic Control Plan for these areas.

Nothing contained on this drawing shall prevent local jurisdictions from modifying changing, or adopting new specifications deemed necessary. Criteria for position, location, and use of Traffic Control Devices is solely for the purpose of guidance to assist in the set up of the Traffic Control Plans.

TC-5 is required for all Traffic Control Plans.

APPLICANT USE

SUBMITTED BY:
NAME
COMPANY
ADDRESS
PHONE

Revision	By	Approved	Date
DRAWING	TRD		5-31-94
	WAJ		8-30-94
	DGB		4-25-95
			9-15-95

APPENDIX "A"
SAN DIEGO REGIONAL STANDARD

SIDE OF ROAD WORK AREA
LEFT TURN INTERSECTION TRAFFIC CONTROL

DRAWING NUMBER TC-33

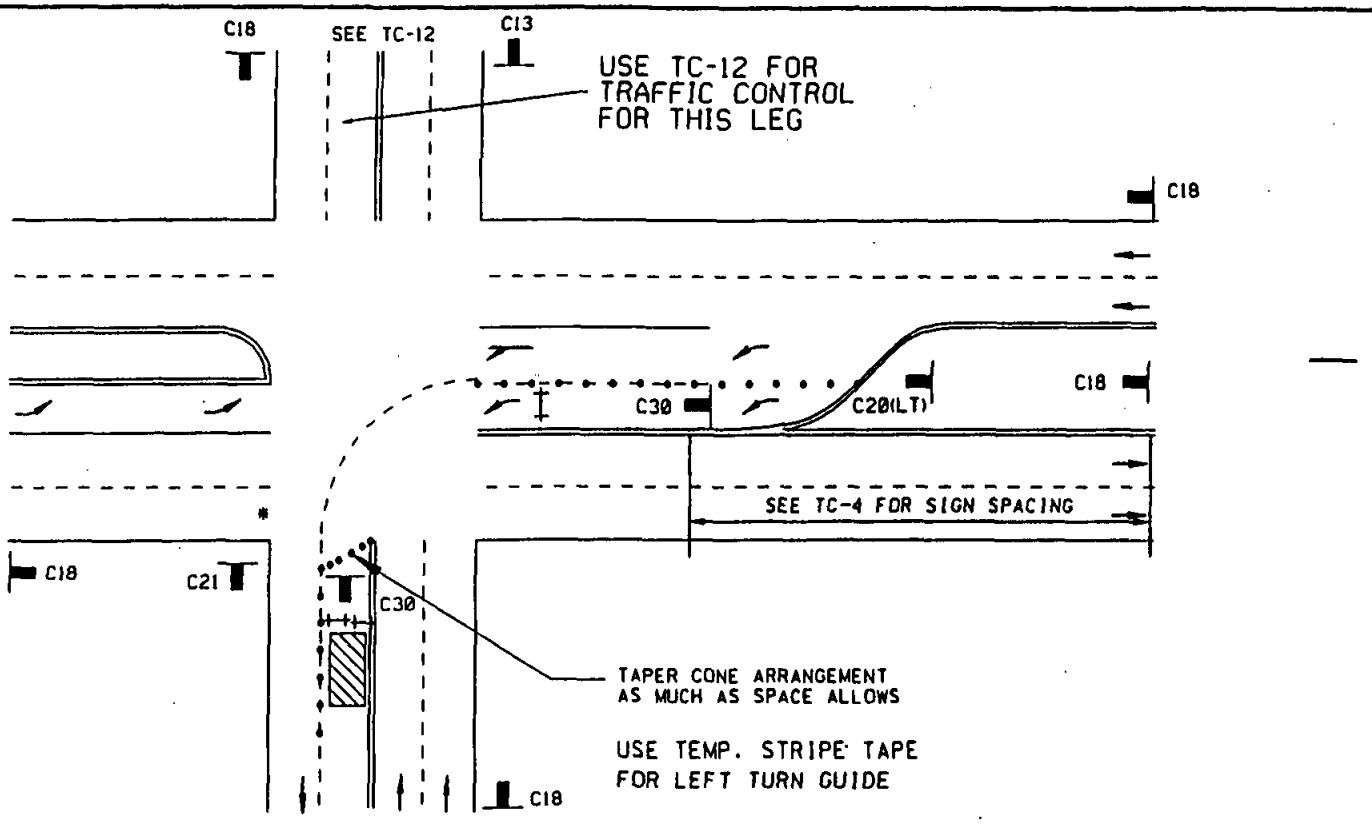

* RIGHT TURNS MAY BE RESTRICTED.

LEGEND

• CONE — BARRICADE — FLAGGER — SIGN — FLASHING ARROW SIGN — WORK AREA — TRAFFIC DIRECTION

AGENCY ENGINEER'S COMMENTS

AGENCY USE

APPLICANT USE

SUBMITTED BY:
NAME
COMPANY
ADDRESS
PHONE

POSTED SPEED LIMIT	APPROACH SPEED	TAPER LENGTH	SPACING OF CONES	SIGN SPACING

SEE TC-4 FOR SIGN, CONE SPACING AND TAPER LENGTH

GENERAL NOTES

For hours of darkness, change cones to vertical barricades with steady burn lights.

Consult the local jurisdiction when preparing Traffic Control Plans near these intersections.

This plan MAY NOT apply when the work areas affect bike lanes, sidewalks, pedestrian access, and curved or narrow roadways. Consult the approving agency when preparing the Traffic Control Plan for these areas.

Nothing contained on this drawing shall prevent local jurisdictions from modifying changing, or adopting new specifications deemed necessary. Criteria for position, location, and use of Traffic Control Devices is solely for the purpose of guidance to assist in the set up of the Traffic Control Plans.

TC-5 is required for all Traffic Control Plans.

APPENDIX "A"
SAN DIEGO REGIONAL STANDARD

SIDE OF ROAD WORK AREA

LEFT TURN INTERSECTION TRAFFIC CONTROL

DRAWING NUMBER TC-34

Revision	By	Approved	Date
DRAWING	TRD		5-31-94
	WAJ		9-26-94
			4-29-95
	DGB		9-15-95

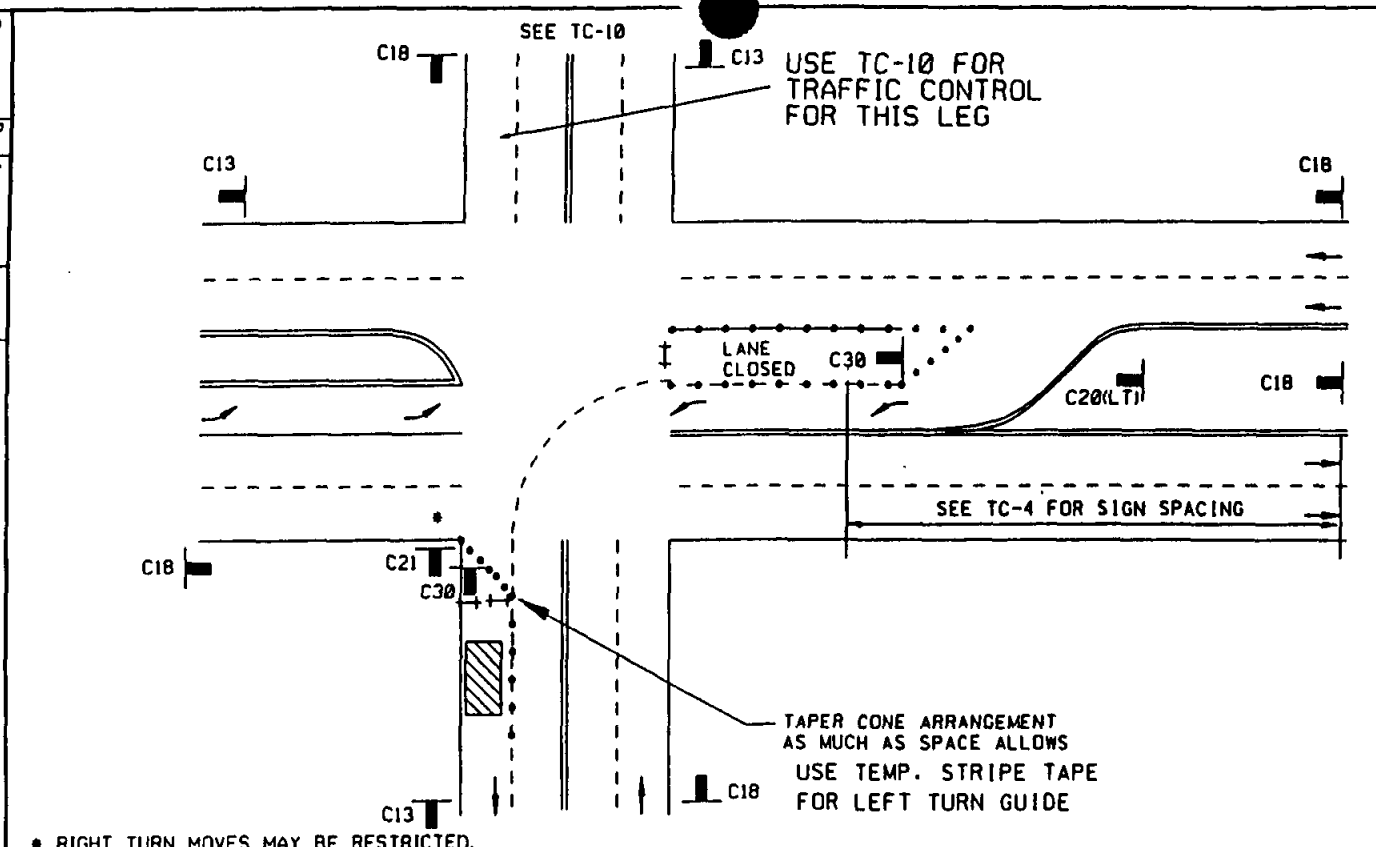

* RIGHT TURN MOVES MAY BE RESTRICTED.

LEGEND

• CONE — BARRICADE — FLAGGER — SIGN — FLASHING ARROW SIGN — WORK AREA — TRAFFIC DIRECTION

AGENCY ENGINEER'S COMMENTS

AGENCY USE

POSTED SPEED LIMIT	APPROACH SPEED	TAPER LENGTH	SPACING OF CONES	SIGN SPACING

SEE TC-4 FOR SIGN, CONE SPACING AND TAPER LENGTH

GENERAL NOTES

For hours of darkness, change cones to vertical barricades with steady burn lights.

Consult the local jurisdiction when preparing Traffic Control Plans near these intersections.

This plan MAY NOT apply when the work areas affect bike lanes, sidewalks, pedestrian access, and curved or narrow roadways. Consult the approving agency when preparing the Traffic Control Plan for these areas.

Nothing contained on this drawing shall prevent local jurisdictions from modifying changing, or adopting new specifications deemed necessary. Criteria for position, location, and use of Traffic Control Devices is solely for the purpose of guidance to assist in the set up of the Traffic Control Plans.

TC-5 is required for all Traffic Control Plans.

APPLICANT USE

SUBMITTED BY:
NAME
COMPANY
ADDRESS
PHONE

Revision	By	Approved	Date
DRAWING	TMD		5-31-94
	WAJ		4-26-94
	DEB		4-25-95
			9-15-95

APPENDIX "A"
SAN DIEGO REGIONAL STANDARD

SIDE OF ROAD WORK AREA
LEFT TURN INTERSECTION TRAFFIC CONTROL

DRAWING NUMBER TC-35

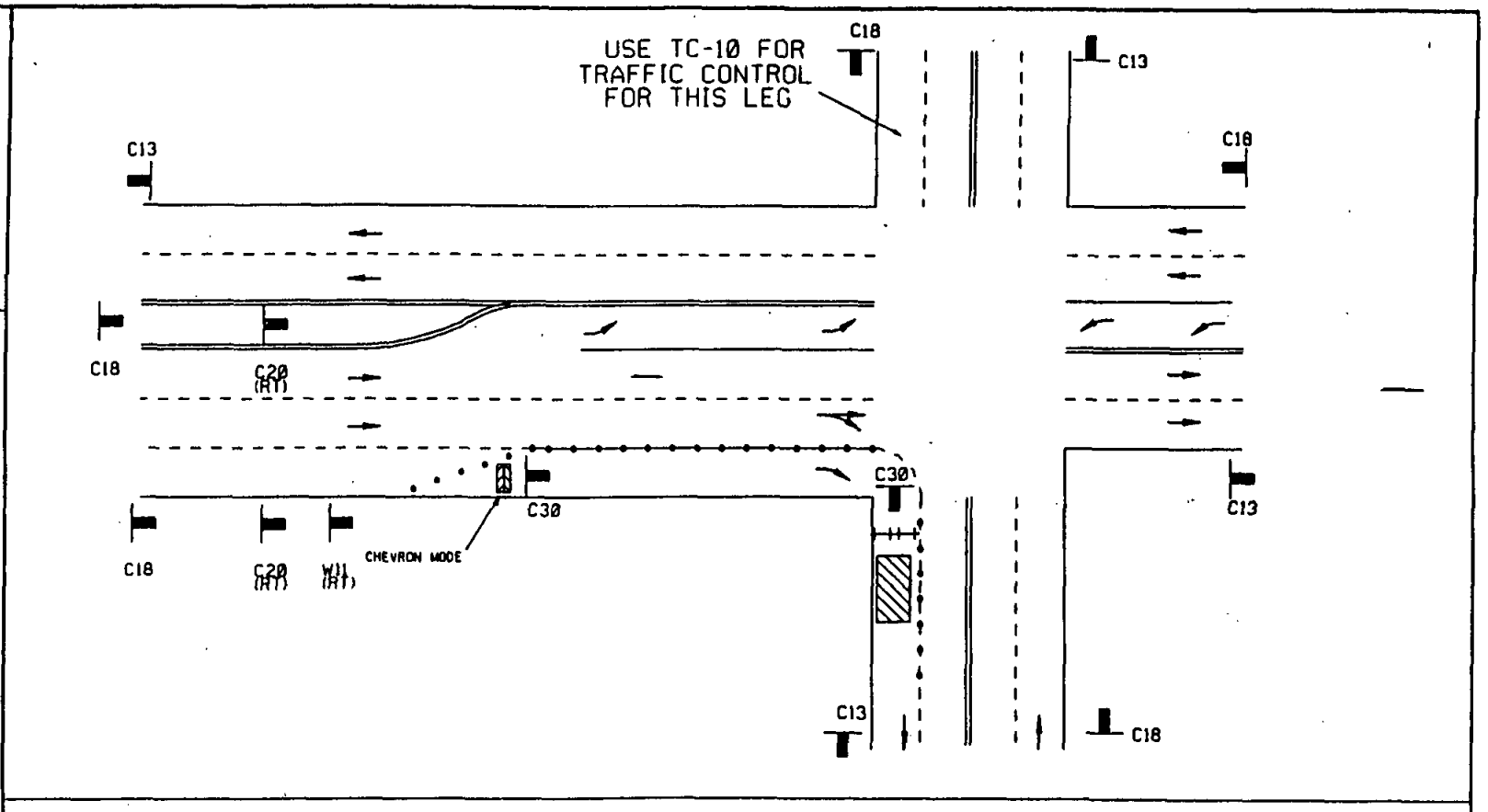

LEGEND

• CONE BARRICADE FLAGGER SIGN FLASHING ARROW SIGN WORK AREA TRAFFIC DIRECTION

AGENCY ENGINEER'S COMMENTS

AGENCY USE

POSTED SPEED LIMIT	APPROACH SPEED	TAPER LENGTH	SPACING OF CONES	SIGN SPACING

SEE TC-4 FOR SIGN, CONE SPACING AND TAPER LENGTH

GENERAL NOTES

For hours of darkness, change cones to vertical barricades with steady burn lights.

Consult the local jurisdiction when preparing Traffic Control Plans near these intersections.

This plan MAY NOT apply when the work areas affect bike lanes, sidewalks, pedestrian access, and curved or narrow roadways. Consult the approving agency when preparing the Traffic Control Plan for these areas.

Nothing contained on this drawing shall prevent local jurisdictions from modifying changing, or adopting new specifications deemed necessary. Criteria for position, location, and use of Traffic Control Devices is solely for the purpose of guidance to assist in the set up of the Traffic Control Plans.

TC-5 is required for all Traffic Control Plans.

APPLICANT USE

SUBMITTED BY:
NAME
COMPANY
ADDRESS
PHONE

APPENDIX "A"
SAN DIEGO REGIONAL STANDARD

SIDE OF ROAD WORK AREA

RIGHT TURN INTERSECTION TRAFFIC CONTROL

DRAWING NUMBER TC-36

Revision	By	Approved	Date
DRAWING	TRD		5-31-94
	WAJ	[signature]	9-26-94
	DGB	[signature]	4-25-95
			9-15-95

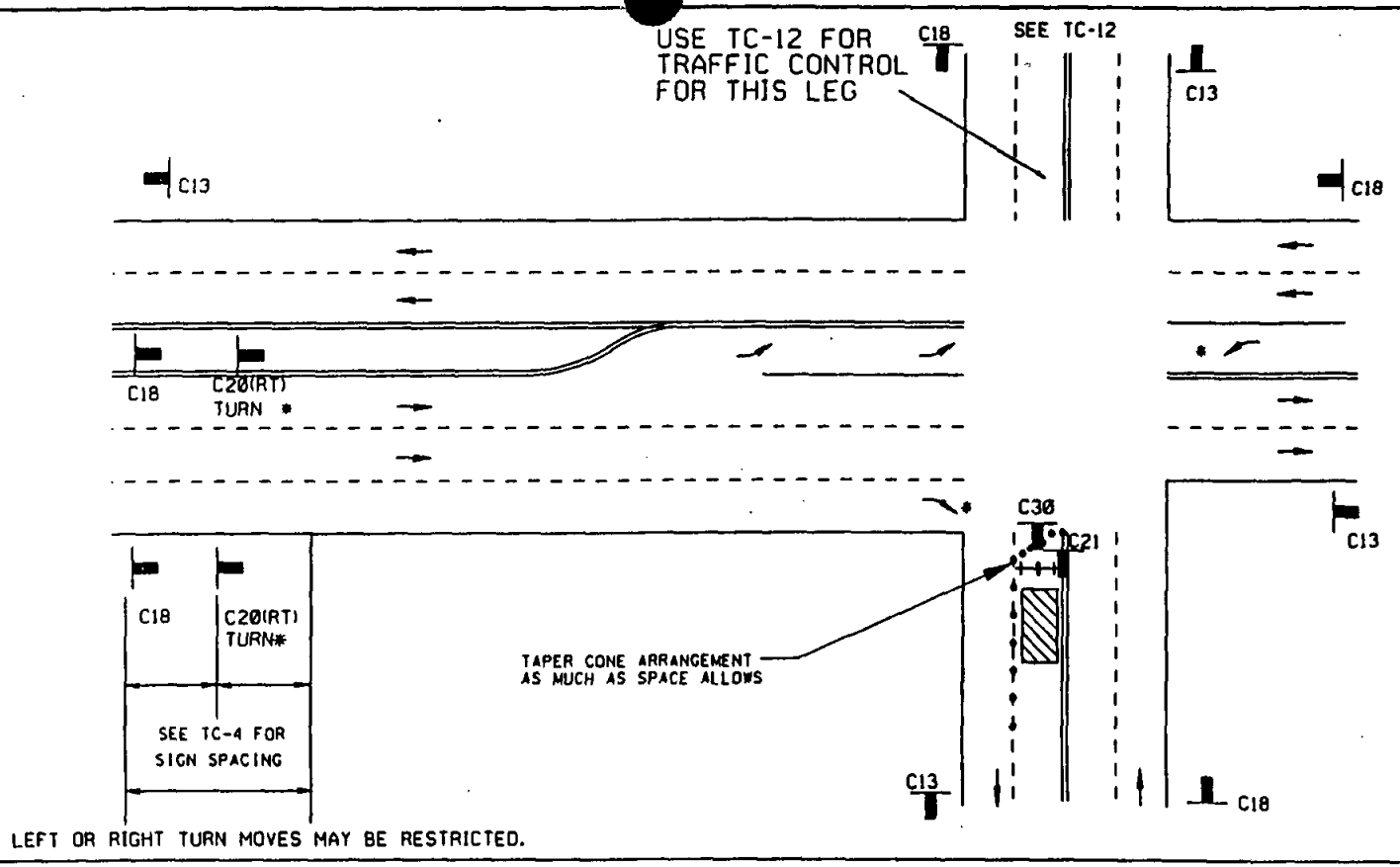

LEGEND

• CONE | BARRICADE | FLAGGER | SIGN | FLASHING ARROW SIGN | WORK AREA | TRAFFIC DIRECTION

AGENCY ENGINEER'S COMMENTS

AGENCY USE

POSTED SPEED LIMIT	APPROACH SPEED	TAPER LENGTH	SPACING OF CONES	SIGN SPACING

SEE TC-4 FOR SIGN, CONE SPACING AND TAPER LENGTH

GENERAL NOTES

For hours of darkness, change cones to vertical barricades with steady burn lights.

Consult the local jurisdiction when preparing Traffic Control Plans near these intersections.

This plan MAY NOT apply when the work areas affect bike lanes, sidewalks, pedestrian access, and curved or narrow roadways. Consult the approving agency when preparing the Traffic Control Plan for these areas.

Nothing contained on this drawing shall prevent local jurisdictions from modifying changing, or adopting new specifications deemed necessary. Criteria for position, location, and use of Traffic Control Devices is solely for the purpose of guidance to assist in the set up of the Traffic Control Plans.

TC-5 is required for all Traffic Control Plans.

APPLICANT USE

SUBMITTED BY:
NAME _____
COMPANY _____
ADDRESS _____
PHONE _____

Revision	By	Approved	Date
DRAWING	TRD		5-31-94
	WAJ		9-26-94
	DGB		9-15-95

APPENDIX "A"
SAN DIEGO REGIONAL STANDARD

SIDE OF ROAD WORK AREA

RIGHT TURN INTERSECTION TRAFFIC CONTROL

DRAWING NUMBER TC-37

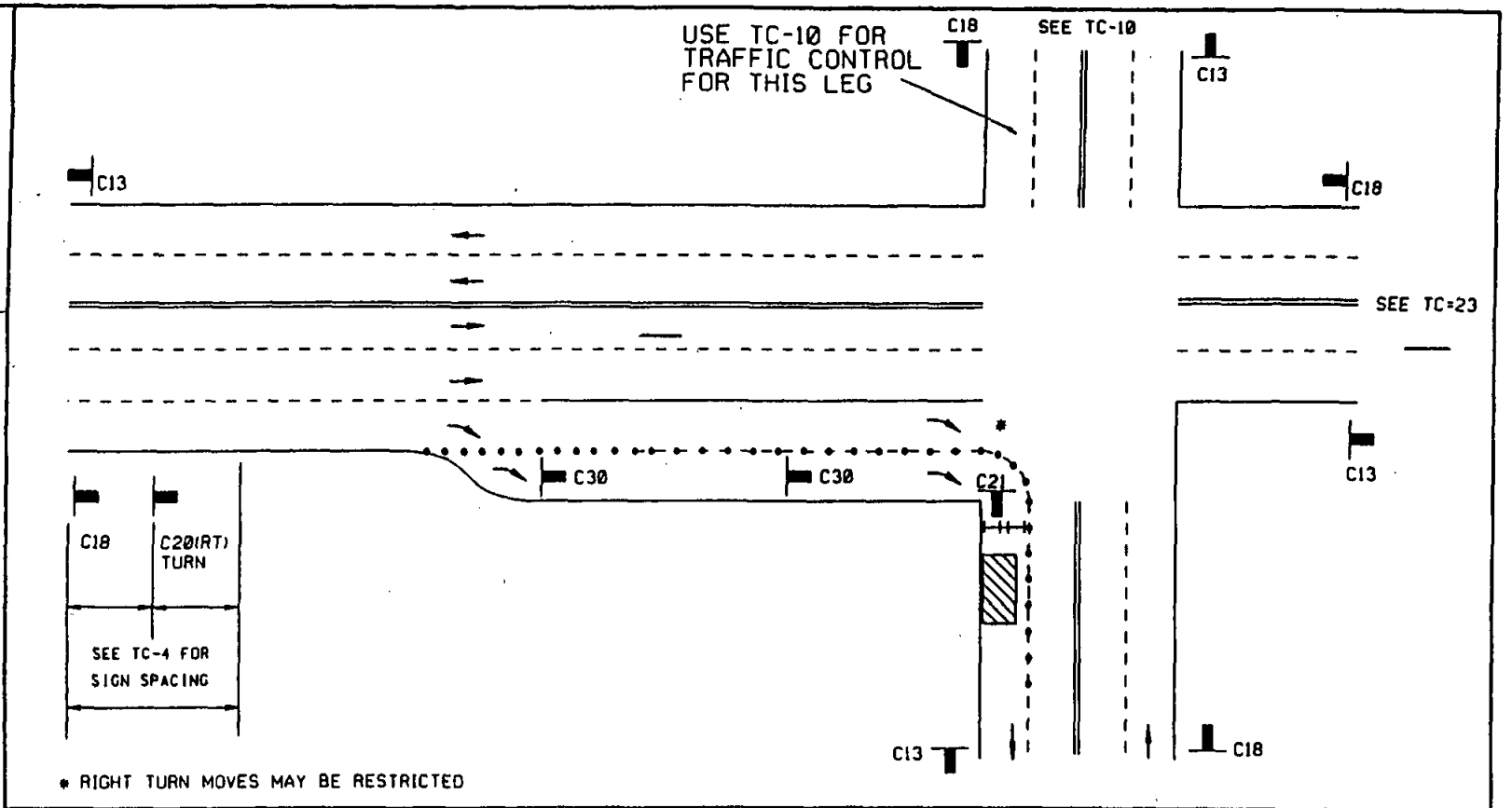

LEGEND

• CONE — BARRICADE — FLAGGER — SIGN — FLASHING ARROW SIGN — WORK AREA — TRAFFIC DIRECTION

AGENCY ENGINEER'S COMMENTS

AGENCY USE

APPLICANT USE

SUBMITTED BY:
NAME
COMPANY
ADDRESS
PHONE

POSTED SPEED LIMIT	APPROACH SPEED	TAPER LENGTH	SPACING OF CONES	SIGN SPACING

SEE TC-4 FOR SIGN, CONE SPACING AND TAPER LENGTH

GENERAL NOTES

For hours of darkness, change cones to vertical barricades with steady burn lights.

This plan MAY NOT apply when the work areas affect bike lanes, sidewalks, pedestrian access, and curved or narrow roadways. Consult the approving agency when preparing the Traffic Control Plan for these areas.

Nothing contained on this drawing shall prevent local jurisdictions from modifying changing, or adopting new specifications deemed necessary. Criteria for position, location, and use of Traffic Control Devices is solely for the purpose of guidance to assist in the set up of the Traffic Control Plans.

TC-5 is required for all Traffic Control Plans.

APPENDIX "A"
SAN DIEGO REGIONAL STANDARD

SIDE OF ROAD WORK AREA

RIGHT TURN INTERSECTION TRAFFIC CONTROL

DRAWING NUMBER TC-38

Revision	By	Approved	Date
DRAWING	TRD		5-31-94
	WAJ		5-26-94
			4-25-95
	DGB		9-15-95

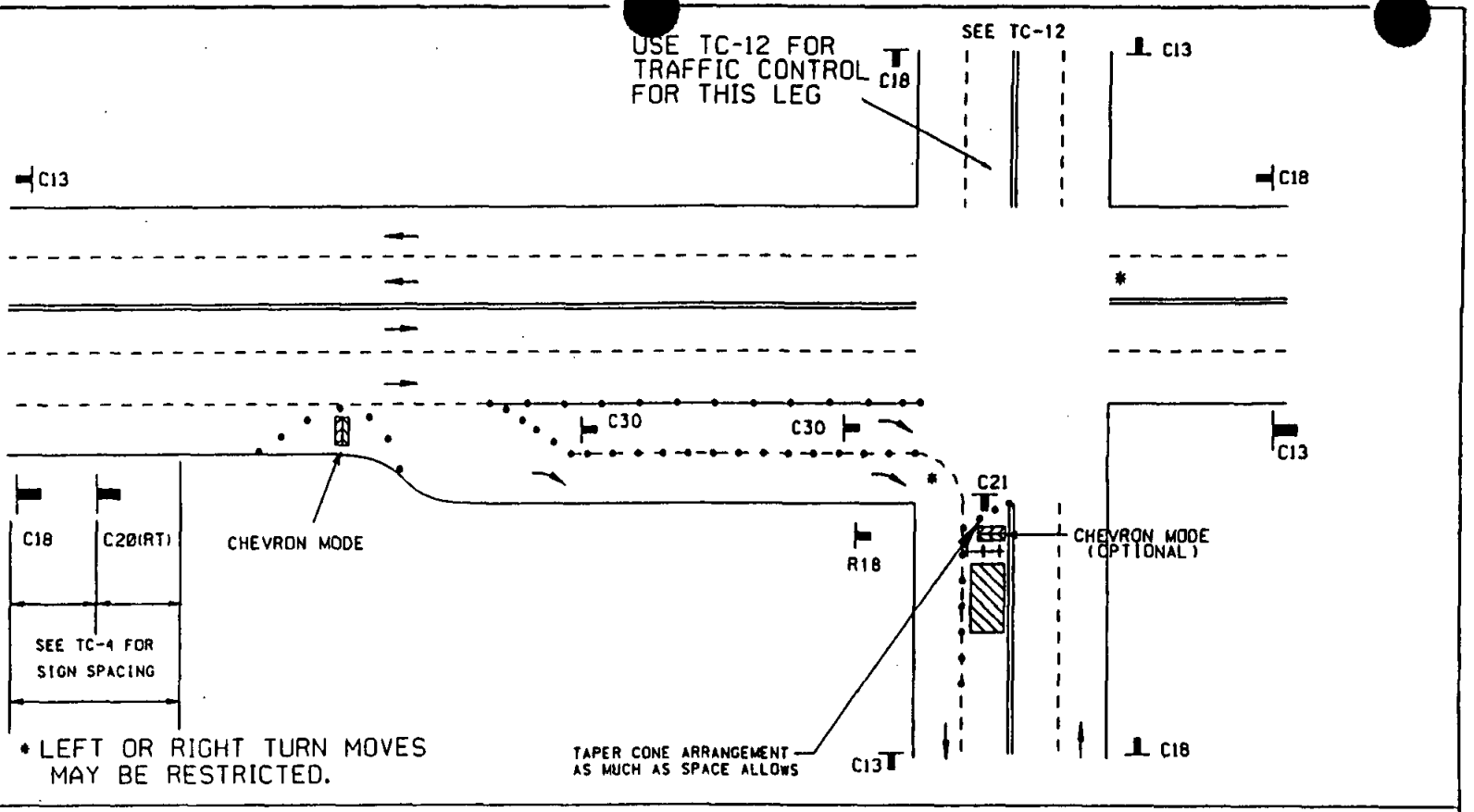

LEGEND

• CONE — BARRICADE — FLAGGER — SIGN — FLASHING ARROW SIGN — WORK AREA — TRAFFIC DIRECTION

AGENCY ENGINEER'S COMMENTS

AGENCY USE

POSTED SPEED LIMIT	APPROACH SPEED	TAPER LENGTH	SPACING OF CONES	SIGN SPACING

SEE TC-4 FOR SIGN, CONE SPACING AND TAPER LENGTH

GENERAL NOTES

For hours of darkness, change cones to vertical barricades with steady burn lights.

Consult the local jurisdiction when preparing Traffic Control Plans near these intersections.

This plan MAY NOT apply when the work areas affect bike lanes, sidewalks, pedestrian access, and curved or narrow roadways. Consult the approving agency when preparing the Traffic Control Plan for these areas.

Nothing contained on this drawing shall prevent local jurisdictions from modifying changing, or adopting new specifications deemed necessary. Criteria for position, location, and use of Traffic Control Devices is solely for the purpose of guidance to assist in the set up of the Traffic Control Plans.

TC-5 is required for all Traffic Control Plans.

APPLICANT USE

SUBMITTED BY:
NAME
COMPANY
ADDRESS
PHONE

Revision	By	Approved	Date
DRAWING	TRD		5-31-94
	WAJ		9-26-94 4-25-95
	DGB		9-15-95

APPENDIX "A"
SAN DIEGO REGIONAL STANDARD

SIDE OF ROAD WORK AREA
RIGHT TURN INTERSECTION TRAFFIC CONTROL

DRAWING NUMBER TC-39

DRAWING NUMBER TC-40

BIKE LANE CLOSURE

APPENDIX "A"
SAN DIEGO REGIONAL STANDARD

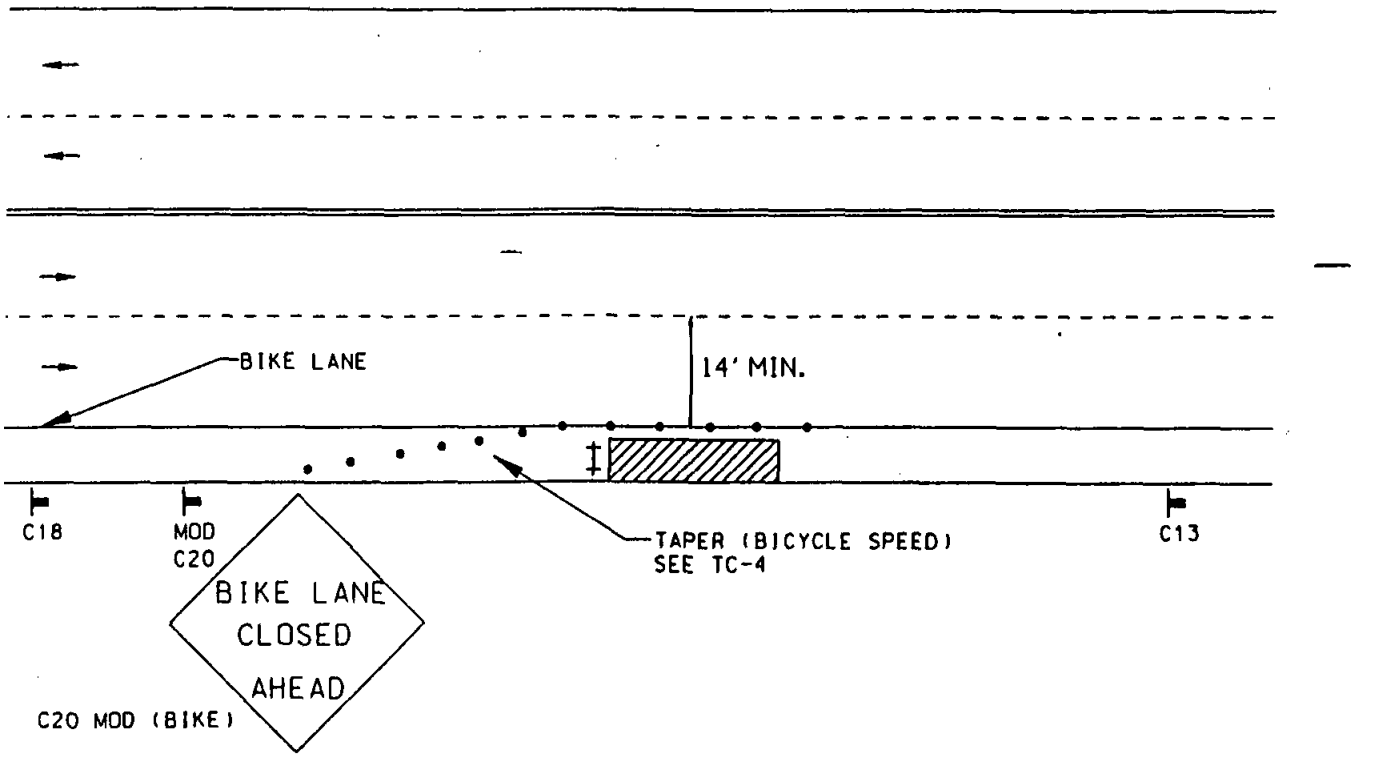

LEGEND

• CONE BARRICADE FLAGGER SIGN FLASHING ARROW SIGN WORK AREA TRAFFIC DIRECTION

AGENCY ENGINEER'S COMMENTS

AGENCY USE

POSTED SPEED LIMIT	APPROACH SPEED	TAPER LENGTH	SPACING OF CONES	SIGN SPACING

SEE TC-4 FOR SIGN AND CONE SPACING AND TAPER LENGTH

GENERAL NOTES

For hours of darkness, change cones to vertical barricades with steady burn lights.

Consult the local jurisdiction when preparing Traffic Control Plans near these intersections.

This plan MAY NOT apply when the work areas affect bike lanes, sidewalks, pedestrian access, and curved or narrow roadways. Consult the approving agency when preparing the Traffic Control Plan for these areas.

Nothing contained on this drawing shall prevent local jurisdictions from modifying changing, or adopting new specifications deemed necessary. Criteria for position, location, and use of Traffic Control Devices is solely for the purpose of guidance to assist in the set up of the Traffic Control Plans.

TC-5 is required for all Traffic Control Plans.

APPLICANT USE

SUBMITTED BY:
NAME
COMPANY
ADDRESS
PHONE

Revision	By	Approved	Date
DRAWING	TRD		5-31-94
	WAJ		4-26-94
	DCB		9-15-95

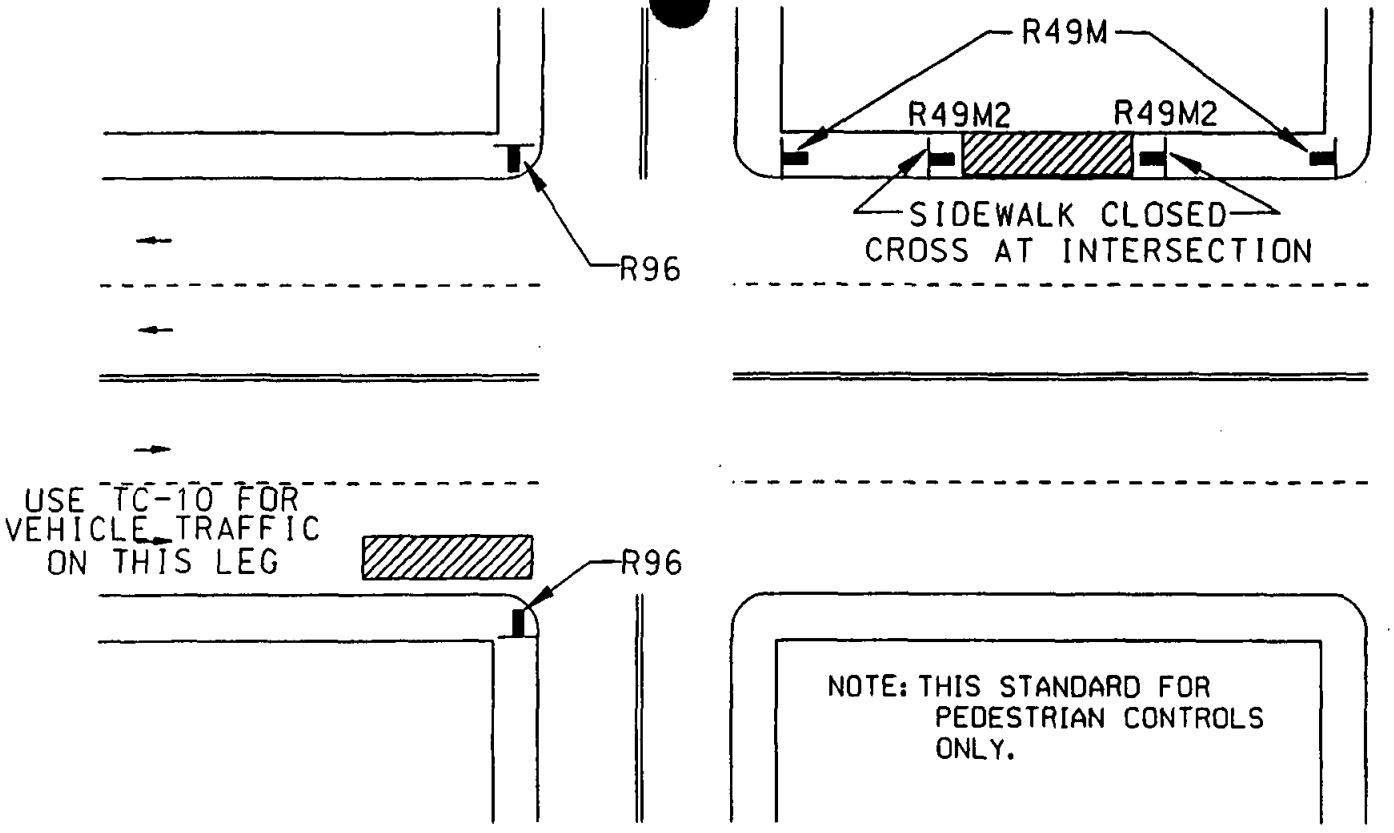

LEGEND

• CONE ⊢⊣ BARRICADE FLAGGER SIGN FLASHING ARROW SIGN WORK AREA TRAFFIC DIRECTION

AGENCY ENGINEER'S COMMENTS

AGENCY USE

POSTED SPEED LIMIT	APPROACH SPEED	TAPER LENGTH	SPACING OF CONES	SIGN SPACING

SEE TC-4 FOR SIGN, CONE SPACING AND TAPER LENGTH

GENERAL NOTES

For hours of darkness, change cones to vertical barricades with steady burn lights.

Consult the local jurisdiction when preparing Traffic Control Plans near these intersections.

This plan MAY NOT apply when the work areas affect bike lanes, sidewalks, pedestrian access, and curved or narrow roadways. Consult the approving agency when preparing the Traffic Control Plan for these areas.

Nothing contained on this drawing shall prevent local jurisdictions from modifying changing, or adopting new specifications deemed necessary. Criteria for position, location, and use of Traffic Control Devices is solely for the purpose of guidance to assist in the set up of the Traffic Control Plans.

TC-5 is required for all Traffic Control Plans.

APPLICANT USE

SUBMITTED BY:
NAME
COMPANY
ADDRESS
PHONE

Revision	By	Approved	Date
DRAWING	TRD		5-31-94
	WAJ		9-26-94
			4-25-95
	DGB		9-15-95

APPENDIX "A"
SAN DIEGO REGIONAL STANDARD

SIDE OF ROAD WORK AREA

TYPICAL PEDESTRIAN CONTROL SIGNS

DRAWING NUMBER TC-41

DRAWING NUMBER TC-42

SIDE OF ROAD WORK AREA

MULTILANE ROADWAY W/ RAISED MEDIAN

APPENDIX "A"
SAN DIEGO REGIONAL STANDARD

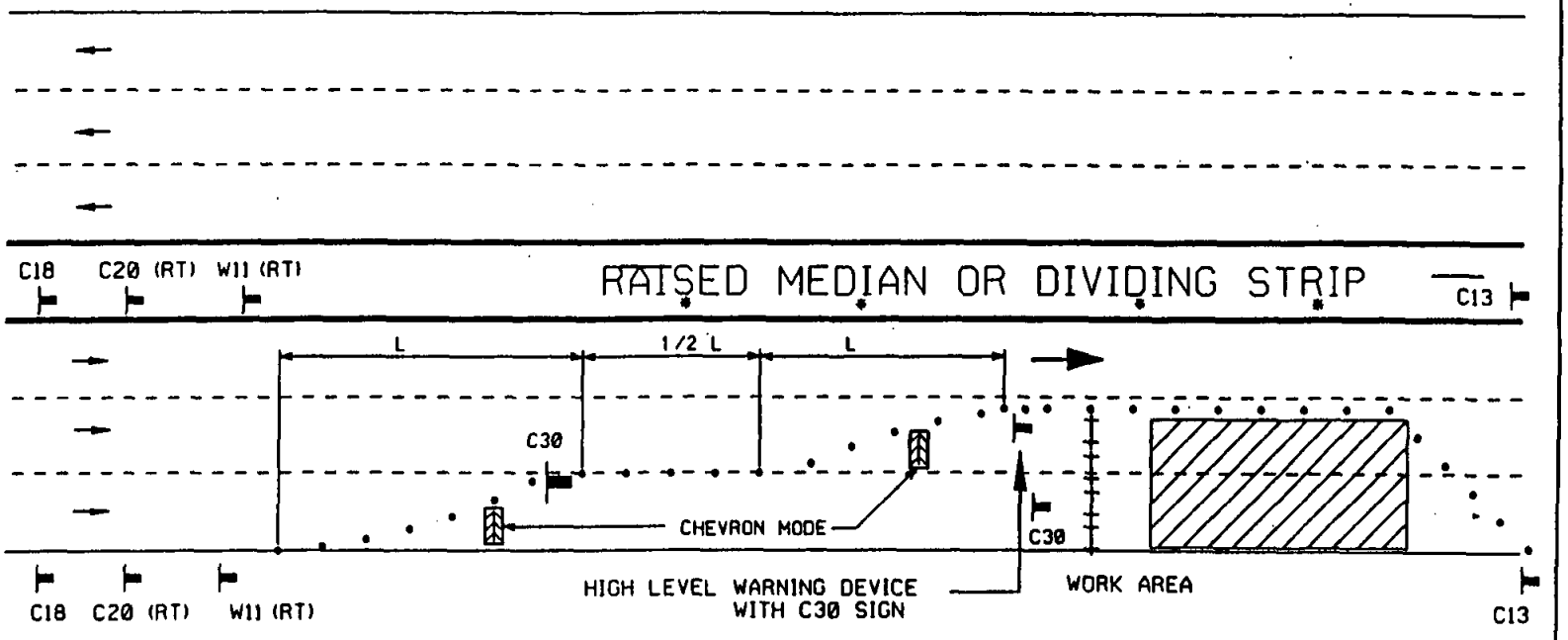

SIGN SPACING SEE TC-4
TABLE 1

TAPER SEE TC-4
TABLE 2

* MEDIAN MAY REQUIRE TEMPORARY PAVEMENT TO CONVEY TRAFFIC VOLUME.

LEGEND

• CONE — BARRICADE — FLAGGER — SIGN — FLASHING ARROW SIGN — WORK AREA — TRAFFIC DIRECTION

AGENCY ENGINEER'S COMMENTS

AGENCY USE

POSTED SPEED LIMIT	APPROACH SPEED	TAPER LENGTH	SPACING OF CONES	SIGN SPACING

SEE TC-4 FOR SIGN, CONE SPACING AND TAPER LENGTH

GENERAL NOTES

For hours of darkness, change cones to vertical barricades with steady burn lights.

This plan DOES NOT apply at signalized or multi-way stop intersections. Consult the local jurisdiction when preparing Traffic Control Plans near these intersections.

This plan MAY NOT apply when the work areas affect bike lanes, sidewalks, pedestrian access, and curved or narrow roadways. Consult the approving agency when preparing the Traffic Control Plan for these areas.

Nothing contained on this drawing shall prevent local jurisdictions from modifying changing, or adopting new specifications deemed necessary. Criteria for position, location, and use of Traffic Control Devices is solely for the purpose of guidance to assist in the set up of the Traffic Control Plans.

TC-5 is required for all Traffic Control Plans.

APPLICANT USE

SUBMITTED BY:
NAME
COMPANY
ADDRESS
PHONE

Revision	By	Approved	Date
DRAWING	TRD		6-94
	WAJ		9-26-94
	DGB		9-15-95

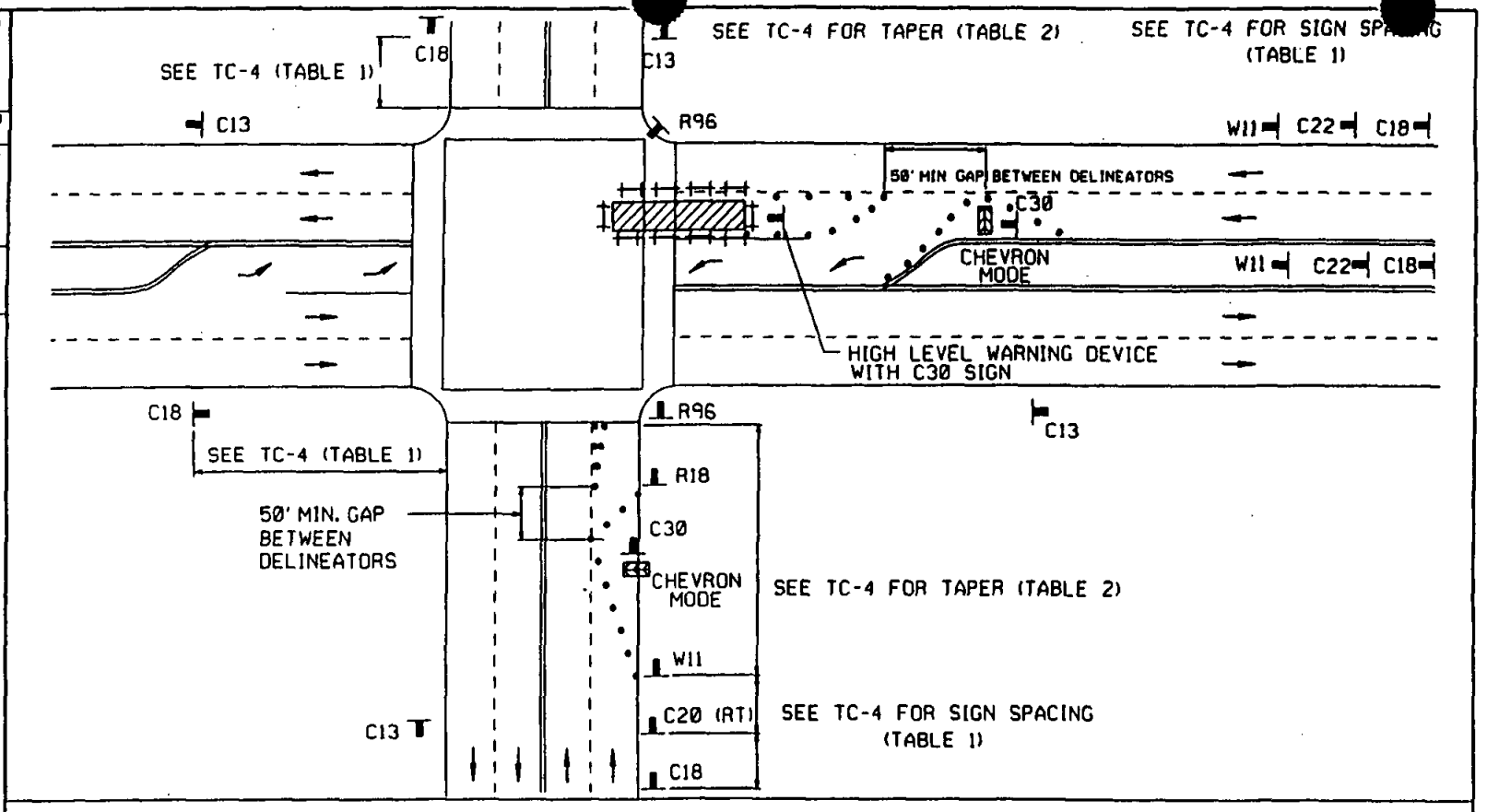

LEGEND

• CONE ++ BARRICADE FLAGGER SIGN FLASHING ARROW SIGN WORK AREA TRAFFIC DIRECTION

AGENCY ENGINEER'S COMMENTS

AGENCY USE

POSTED SPEED LIMIT	APPROACH SPEED	TAPER LENGTH	SPACING OF CONES	SIGN SPACING

SEE TC-4 FOR SIGN, CONE SPACING AND TAPER LENGTH

GENERAL NOTES

For hours of darkness, change cones to vertical barricades with steady burn lights.

Consult the local jurisdiction when preparing Traffic Control Plans near these intersections.

This plan MAY NOT apply when the work areas affect bike lanes, sidewalks, pedestrian access, and curved or narrow roadways. Consult the approving agency when preparing the Traffic Control Plan for these areas.

Nothing contained on this drawing shall prevent local jurisdictions from modifying changing, or adopting new specifications deemed necessary. Criteria for position location, and use of Traffic Control Devices is solely for the purpose of guidance to assist in the set up of the Traffic Control Plans.

TC-5 is required for all Traffic Control Plans.

APPLICANT USE

SUBMITTED BY:
NAME
COMPANY
ADDRESS
PHONE

Revision	By	Approved	Date
DRAWING	TRD		6-10-94
	WAJ		9-26-94
			4-25-95
	DGB		9-15-95

APPENDIX "A"
SAN DIEGO REGIONAL STANDARD

WORK WITHIN INTERSECTION

RIGHT LANE / LEFT LANE

DRAWING NUMBER TC-43

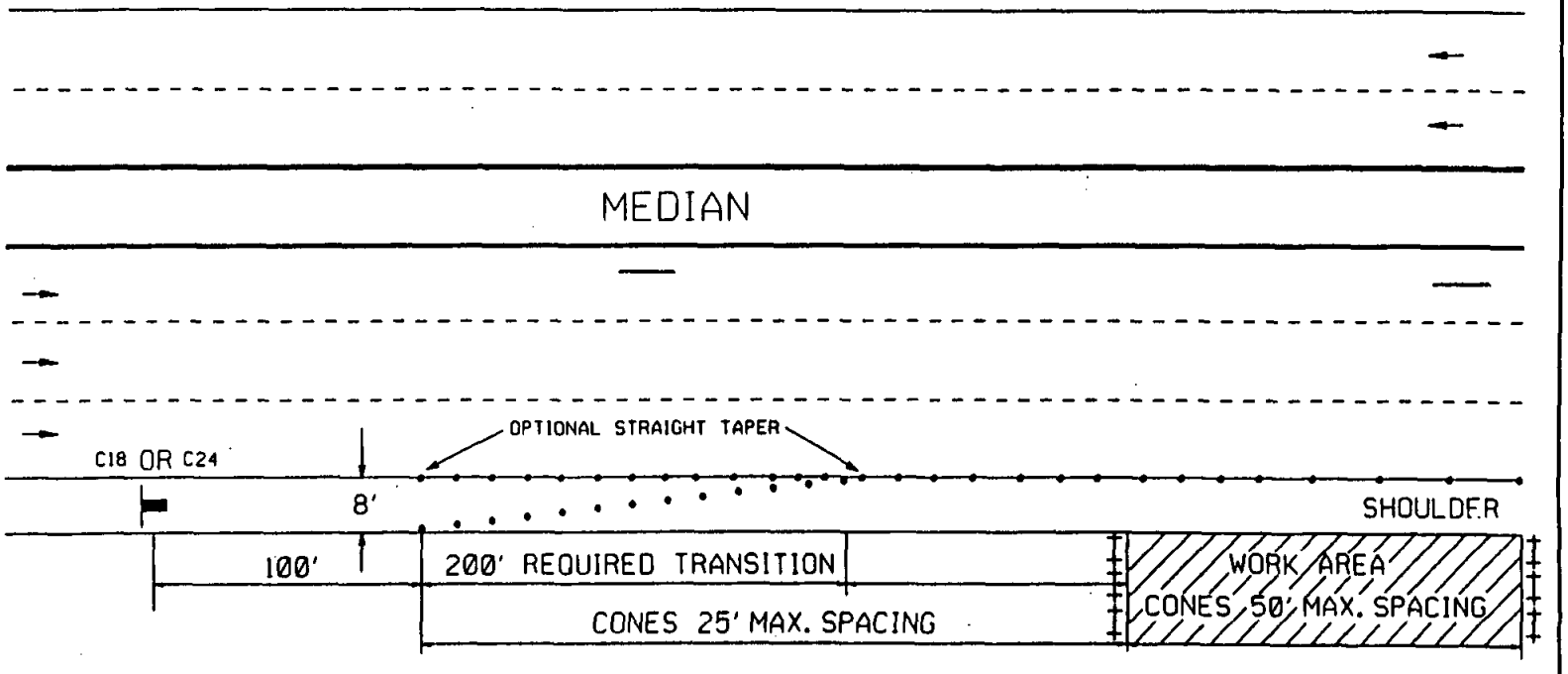

LEGEND

• CONE BARRICADE FLAGGER SIGN FLASHING ARROW SIGN WORK AREA TRAFFIC DIRECTION

AGENCY ENGINEER'S COMMENTS

AGENCY USE

POSTED SPEED LIMIT	APPROACH SPEED	TAPER LENGTH	SPACING OF CONES	SIGN SPACING

SEE TC-4 FOR SIGN, CONE SPACING AND TAPER LENGTH

GENERAL NOTES

For hours of darkness, change cones to vertical barricades with steady burn lights.

This plan DOES NOT apply at signalized or multi-way stop intersections. Consult the local jurisdiction when preparing Traffic Control Plans near these intersections.

This plan MAY NOT apply when the work areas affect bike lanes, sidewalks, pedestrian access, and curved or narrow roadways. Consult the approving agency when preparing the Traffic Control Plan for these areas.

Nothing contained on this drawing shall prevent local jurisdictions from modifying changing, or adopting new specifications deemed necessary. Criteria for position, location, and use of Traffic Control Devices is solely for the purpose of guidance to assist in the set up of the Traffic Control Plans.

TC-5 is required for all Traffic Control Plans.

APPLICANT USE

SUBMITTED BY:
NAME
COMPANY
ADDRESS
PHONE

APPENDIX "A"
SAN DIEGO REGIONAL STANDARD

TYPICAL SHOULDER CLOSURE
MULTILANE ROADWAY
WITH RAISED MEDIAN

DRAWING NUMBER TC-44

Revision	By	Approved	Date
DRAWING	DWV		4-91
ORIGINAL			10-8-91
	MAJ		9-26-94
	DGR		4-25-95
			9-15-95

DRAWING NUMBER TC-90

SPECIAL CONDITIONS WORK AREA

TWO LANE ROADWAY
WITHOUT CENTERLINE

APPENDIX "A"
SAN DIEGO REGIONAL STANDARD

Revision	By	Approved	Date
DRAWING	GMV		4-91
ORIG.		RD	10-8-91
	MAJ		10-4-94

LEGEND

CONE | BARRICADE | FLAGGER | SIGN | FLASHING ARROW SIGN | WORK AREA | TRAFFIC DIRECTION

TRAFFIC ENGINEERS COMMENTS

SUBMITTED BY:
NAME
AGENCY
ADDRESS
PHONE

POSTED SPEED LIMIT	APPROACH SPEED	TAPER LENGTH	SPACING OF CONES	SIGN SPACING

SEE TC-4 FOR SIGN AND CONE SPACING AND TAPER LENGTH

GENERAL NOTES

For hours of darkness, change cones to vertical barricades with steady burn lights.

This plan DOES NOT apply at signalized or multi-way stop intersections. Consult the local jurisdiction when preparing Traffic Control Plans near these intersections.

This plan MAY NOT apply when the work areas affect bike lanes, sidewalks, pedestrian access, and curved or narrow roadways. Consult the approving agency when preparing the Traffic Control Plan for these areas.

Nothing contained on this drawing shall prevent local jurisdictions from modifying changing, or adopting new specifications deemed necessary. Criteria for position, location, and use of Traffic Control Devices is solely for the purpose of guidance to assist in the set up of the Traffic Control Plans.

TC-5 is required for all Traffic Control Plans.

Revision	By	Approved	Date
DRAWING	DMV		4-91
ORIG.			10-8-91
	MAJ		10-4-94

SPECIAL CONDITIONS WORK AREA

TWO LANE ROADWAY
WITH CENTERLINE

APPENDIX "A"
SAN DIEGO REGIONAL STANDARD

DRAWING NUMBER TC-91

LEGEND

CONE | BARRICADE | FLAGGER | SIGN | FLASHING ARROW SIGN | WORK AREA | TRAFFIC DIRECTION

TRAFFIC ENGINEERS COMMENTS

SUBMITTED BY:
NAME
AGENCY
ADDRESS
PHONE

POSTED SPEED LIMIT	APPROACH SPEED	TAPER LENGTH	SPACING OF CONES	SIGN SPACING

SEE TC-4 FOR SIGN AND CONE SPACING AND TAPER LENGTH

GENERAL NOTES

For hours of darkness, change cones to vertical barricades with steady burn lights.

This plan DOES NOT apply at signalized or multi-way stop intersections. Consult the local jurisdiction when preparing Traffic Control Plans near these intersections.

This plan MAY NOT apply when the work areas affect bike lanes, sidewalks, pedestrian access, and curved or narrow roadways. Consult the approving agency when preparing the Traffic Control Plan for these areas.

Nothing contained on this drawing shall prevent local jurisdictions from modifying changing, or adopting new specifications deemed necessary. Criteria for position, location, and use of Traffic Control Devices is solely for the purpose of guidance to assist in the set up of the Traffic Control Plans.

TC-5 is required for all Traffic Control Plans.

DRAWING NUMBER TC-92

SPECIAL CONDITIONS WORK AREA

MULTILANE ROADWAY WITH CENTERLINE

APPENDIX "A"
SAN DIEGO REGIONAL STANDARD

Revision	By	Approved	Date
DRAWING	DRW		4-91
ORIG.			10-8-91
	WAJ		10-4-94

LEGEND

CONE | BARRICADE | FLAGGER | SIGN | FLASHING ARROW SIGN | WORK AREA | TRAFFIC DIRECTION

TRAFFIC ENGINEERS COMMENTS

SUBMITTED BY:
NAME
AGENCY
ADDRESS
PHONE

POSTED SPEED LIMIT	APPROACH SPEED	TAPER LENGTH	SPACING OF CONES	SIGN SPACING

SEE TC-4 FOR SIGN AND CONE SPACING AND TAPER LENGTH

GENERAL NOTES

For hours of darkness, change cones to vertical barricades with steady burn lights.

This plan DOES NOT apply at signalized or multi-way stop intersections. Consult the local jurisdiction when preparing Traffic Control Plans near these intersections.

This plan MAY NOT apply when the work areas affect bike lanes, sidewalks, pedestrian access, and curved or narrow roadways. Consult the approving agency when preparing the Traffic Control Plan for these areas.

Nothing contained on this drawing shall prevent local jurisdictions from modifying changing, or adopting new specifications deemed necessary. Criteria for position, location, and use of Traffic Control Devices is solely for the purpose of guidance to assist in the set up of the Traffic Control Plans.

TC-5 is required for all Traffic Control Plans.

Revision	By	Approved	Date
DRAWING	DMV		4-91
ORIG.			10-8-91
	WAJ		10-4-94

SPECIAL CONDITIONS WORK AREA

TWO LANE ROADWAY
WITH TWO WAY LEFT TURN LANE

APPENDIX "A"
SAN DIEGO REGIONAL STANDARD

DRAWING NUMBER TC-93

LEGEND

● CONE ⟷ BARRICADE FLAGGER SIGN FLASHING ARROW SIGN WORK AREA TRAFFIC DIRECTION

TRAFFIC ENGINEERS COMMENTS

SUBMITTED BY:
NAME
AGENCY
ADDRESS
PHONE

POSTED SPEED LIMIT	APPROACH SPEED	TAPER LENGTH	SPACING OF CONES	SIGN SPACING

SEE TC-4 FOR SIGN AND CONE SPACING AND TAPER LENGTH

GENERAL NOTES

For hours of darkness, change cones to vertical barricades with steady burn lights.

This plan DOES NOT apply at signalized or multi-way stop intersections. Consult the local jurisdiction when preparing Traffic Control Plans near these intersections.

This plan MAY NOT apply when the work areas affect bike lanes, sidewalks, pedestrian access, and curved or narrow roadways. Consult the approving agency when preparing the Traffic Control Plan for these areas.

Nothing contained on this drawing shall prevent local jurisdictions from modifying changing, or adopting new specifications deemed necessary. Criteria for position, location, and use of Traffic Control Devices is solely for the purpose of guidance to assist in the set up of the Traffic Control Plans.

TC-5 is required for all Traffic Control Plans.

DRAWING NUMBER TC-94

SPECIAL CONDITIONS WORK AREA

MULTILANE ROADWAY
WITH TWO WAY LEFT TURN LANE

APPENDIX "A"
SAN DIEGO REGIONAL STANDARD

Revision	By	Approved	Date
DRAWING	DMV		4-91
ORIG.			10-8-91
	MAJ		10-4-94

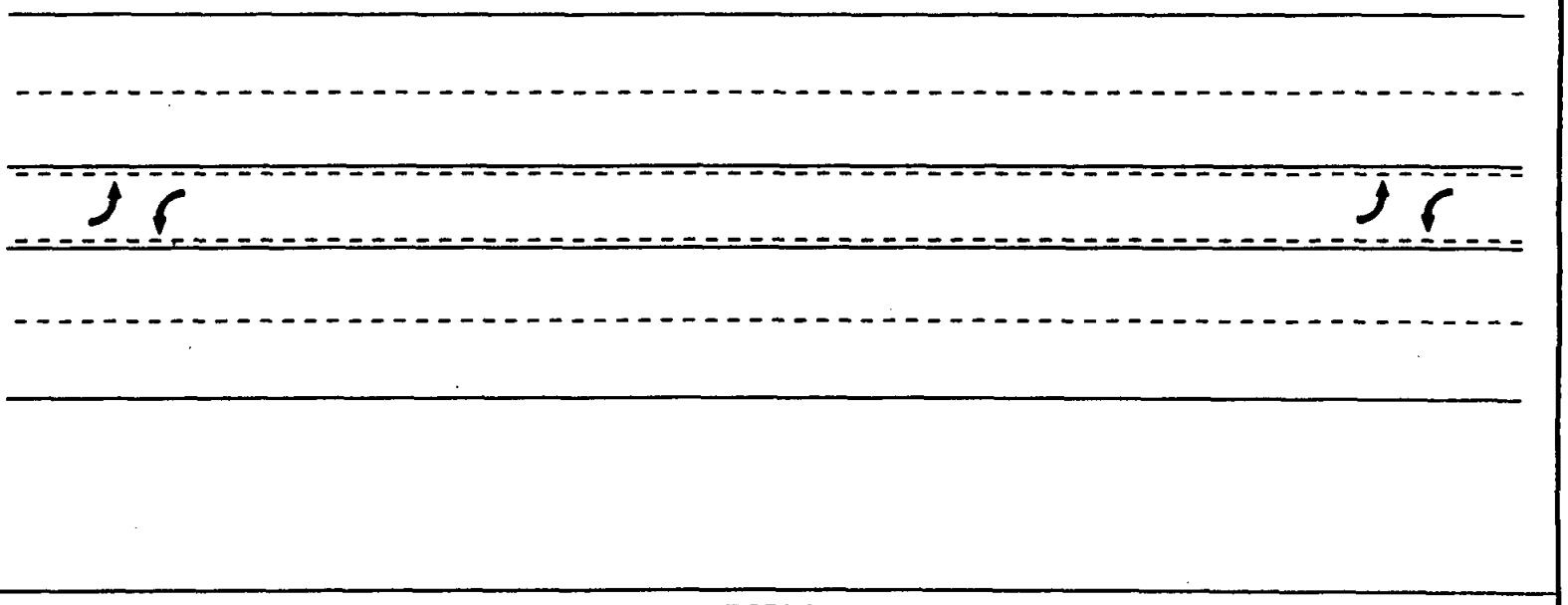

LEGEND

CONE · BARRICADE · FLAGGER · SIGN · FLASHING ARROW SIGN · WORK AREA · TRAFFIC DIRECTION

TRAFFIC ENGINEERS COMMENTS

SUBMITTED BY:
NAME
AGENCY
ADDRESS
PHONE

POSTED SPEED LIMIT	APPROACH SPEED	TAPER LENGTH	SPACING OF CONES	SIGN SPACING

SEE TC-4 FOR SIGN AND CONE SPACING AND TAPER LENGTH

GENERAL NOTES

For hours of darkness, change cones to vertical barricades with steady burn lights.

This plan DOES NOT apply at signalized or multi-way stop intersections. Consult the local jurisdiction when preparing Traffic Control Plans near these intersections.

This plan MAY NOT apply when the work areas affect bike lanes, sidewalks, pedestrian access, and curved or narrow roadways. Consult the approving agency when preparing the Traffic Control Plan for these areas.

Nothing contained on this drawing shall prevent local jurisdictions from modifying changing, or adopting new specifications deemed necessary. Criteria for position, location, and use of Traffic Control Devices is solely for the purpose of guidance to assist in the set up of the Traffic Control Plans.

TC-5 is required for all Traffic Control Plans.

Revision	By	Approved	Date
DRAWING	bwv		4-91
ORIG.			10-8-91
	WAJ		10-4-94

SPECIAL CONDITIONS WORK AREA

MULTILANE ROADWAY
WITH RAISED MEDIAN

APPENDIX "A"
SAN DIEGO REGIONAL STANDARD

DRAWING NUMBER TC-95

RAISED MEDIAN

LEGEND

CONE | BARRICADE | FLAGGER | SIGN | FLASHING ARROW SIGN | WORK AREA | TRAFFIC DIRECTION

TRAFFIC ENGINEERS COMMENTS

SUBMITTED BY:
NAME
AGENCY
ADDRESS
PHONE

POSTED SPEED LIMIT	APPROACH SPEED	TAPER LENGTH	SPACING OF CONES	SIGN SPACING

SEE TC-4 FOR SIGN AND CONE SPACING AND TAPER LENGTH

GENERAL NOTES

For hours of darkness, change cones to vertical barricades with steady burn lights.

This plan DOES NOT apply at signalized or multi-way stop intersections. Consult the local jurisdiction when preparing Traffic Control Plans near these intersections.

This plan MAY NOT apply when the work areas affect bike lanes, sidewalks, pedestrian access, and curved or narrow roadways. Consult the approving agency when preparing the Traffic Control Plan for these areas.

Nothing contained on this drawing shall prevent local jurisdictions from modifying changing, or adopting new specifications deemed necessary. Criteria for position, location, and use of Traffic Control Devices is solely for the purpose of guidance to assist in the set up of the Traffic Control Plans.

TC-5 is required for all Traffic Control Plans.

DRAWING NUMBER TC-96

SPECIAL CONDITIONS WORK AREA

INTERSECTION

APPENDIX "A"
SAN DIEGO REGIONAL STANDARD

Revision	By	Approved	Date
DRAWING ORIG.	DRW		4-91
			10-8-91
	MAL		10-4-94

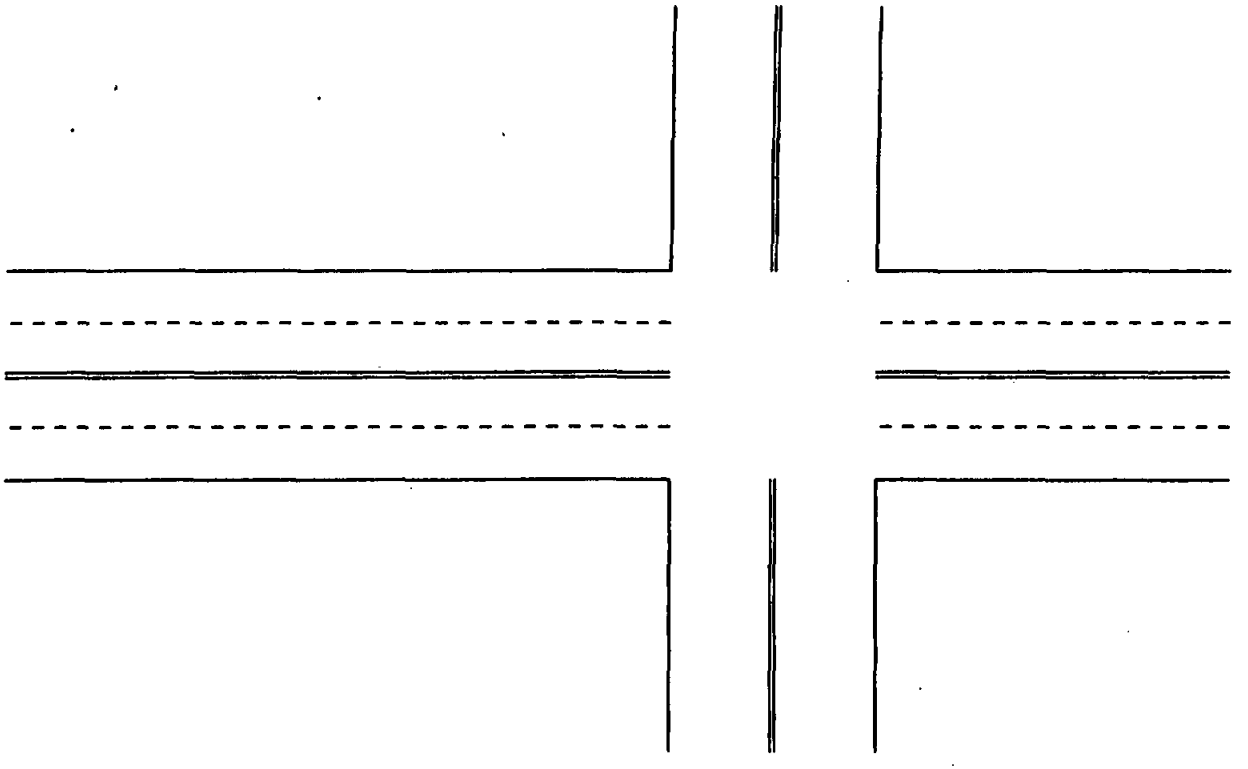

LEGEND

CONE | BARRICADE | FLAGGER | SIGN | FLASHING ARROW SIGN | WORK AREA | TRAFFIC DIRECTION

TRAFFIC ENGINEERS COMMENTS

SUBMITTED BY:
NAME
AGENCY
ADDRESS
PHONE

POSTED SPEED LIMIT	APPROACH SPEED	TAPER LENGTH	SPACING OF CONES	SIGN SPACING

SEE TC-4 FOR SIGN AND CONE SPACING AND TAPER LENGTH

GENERAL NOTES

For hours of darkness, change cones to vertical barricades with steady burn lights.

This plan DOES NOT apply at signalized or multi-way stop intersections. Consult the local jurisdiction when preparing Traffic Control Plans near these intersections.

This plan MAY NOT apply when the work areas affect bike lanes, sidewalks, pedestrian access, and curved or narrow roadways. Consult the approving agency when preparing the Traffic Control Plan for these areas.

Nothing contained on this drawing shall prevent local jurisdictions from modifying changing, or adopting new specifications deemed necessary. Criteria for position, location, and use of Traffic Control Devices is solely for the purpose of guidance to assist in the set up of the Traffic Control Plans.

TC-5 is required for all Traffic Control Plans.

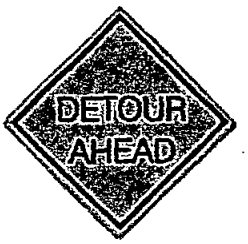

C1

C2

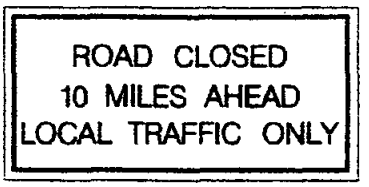

C3

C3A

C5 (RT)

C5 (LT)

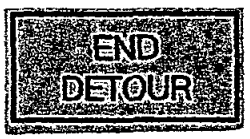

C7

C9A

C12

C13

C14

C18

C19

C20 (RT)

C20 (LT)

Revision	By	Approved	Date
DRAWING	TRD		6-94

APPENDIX "A"
SAN DIEGO REGIONAL STANDARD

TYPICAL CONSTRUCTION SIGNS

DRAWING NUMBER TC-97

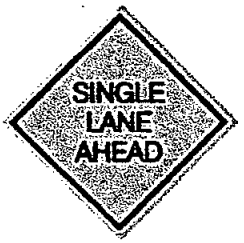

C21

C23

C24

C27

C28A
FLAGGER
PADDLE

C28B
FLAGGER
PADDLE

C30

C30A

C36

R1

R7

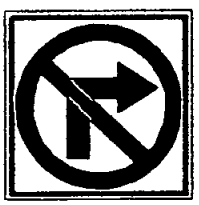

R16

R17

R18(RT)

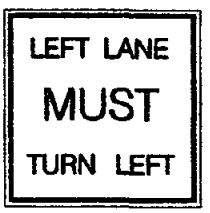

R18 (LT)

R26

R34

R34-2

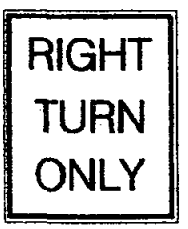

R41

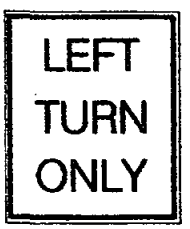

R42

Revision	By	Approved	Date
DRAWING	TRD		9-94

APPENDIX "A"
SAN DIEGO REGIONAL STANDARD

TYPICAL CONSTRUCTION SIGNS

DRAWING NUMBER TC-98

R49M

R96

SR45

W1 (RT)

W1 (LT)

W2 (RT)

W2 (LT)

W11 (LT)

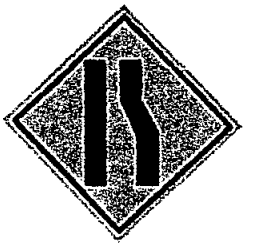

W11 (RT)

Revision	By	Approved	Date
DRAWING	TRD		9-94

APPENDIX "A"
SAN DIEGO REGIONAL STANDARD

TYPICAL CONSTRUCTION SIGNS

DRAWING NUMBER TC-99

INDEX

-A-

AIR AND VACUUM VALVE
- 1" and 2" W-4
- 4" and 6" W-5
- Enclosure W-14

AIR RELEASE VALVE
- Manual W-3

ALLEY
- Apron G-17
- Concrete G-21

ANCHOR, PIPE
- Concrete S-9
- Thrust W-22
- Valve W-19
- Vertical Bend W-20

-B-

BACKFILL, TRENCH
- Irrigation I-25, I-26
- Sewer S-4
- Storm Drain D-60
- Water Main W-21
- NARROW TRENCHES M7, M7A

BACKFLOW PREVENTER
- Continuous Pressure I-8
- Reduced Pressure W-26, W-27, W-28
- Vacuum Breaker I-7

BARRICADE
- Continuous M-9

BARRIER, CONCRETE
- Type 50 ..... M-42
- Type 50E M-43
- Type K M-44

BENCH MARK
- Brass Plug M-11

BERM
- Asphalt Concrete G-5

BLOCK, CONCRETE
- Anchor W-20, W-22
- Thrust W-17, W-22
- Valve W-19

BLOW-OFF WATER
- 2" W-6, W-7
- 4" and 6" W-8, W-9

BROW DITCH D-75

BUTT STRAP, SPLIT W-24

-C-

CATCH BASIN
- Corrugated Steel Pipe Types A & B D-16
- Grate Top, Type G D-8
- Type I D-29
- Type F D-7

CHANNEL, DRAINAGE
- Cutoff Wall D-72
- Debris Fence D-82
- Graded Earth Channel D-74
- Major Channel D-71
- Minor Channel D-70
- Pipe to Channel Connection D-73

CONCRETE
- Backfill, Sewer S-8
- Collar, Pipe D-62
- Cradle, Sewer S-6
- Encasement, Sewer S-7, S-12
- Protection, Sewer S-11
- Lug, Concete D-63
- Mowing Strip L-3
- Removal and Replacement G-11
- Steps M-26

CORRUGATED STEEL PIPE
- Inlets, Type A, B D-16, D-17
- Slotted Drain D-18, D-19

CULVERT, BOX
- Double D-77A, D-77B
- Miscellaneous Details D-81A, D-81B
- Single D-76A, D-76B
- Triple D-78A, D-78B
- Wingwalls, Type A, B, C D-79A, D-79B
- Wingwalls, Warped D-80A, D-80B

CURB AND GUTTER
- Combined G-2
- Median G-6
- Monolithic G-3
- Removal and Replacement G-11
- Rolled G-4
- Separate G-1

CURB INLET
- Concrete Apron D-20
- Grate D-15

INDEX

Median, Type J D-45

Notes and Details D-11
Opening D-12
Side Opening Only D-1, D-2, D-4
Side Opening w/Gate D-3

CURB OUTLET
Concrete, Type A D-25
Pipe D-27

CURB RAMP
Types A and B G-27
Types A-1 and B-1 ..... G-28
Type C G-29
Type C-1 ..... G-30
Type D G-31
General Notes G-32

CURTAIN WALL D-38

CUTOFF WALL
Alley Pavement G-23
Channel D-72
Street Pavement G-22
Trench S-10

-D-

DATUMS M-12

DEBRIS FENCE D-82

DIKE, A.C. G-5

DISSIPATOR, ENERGY
Concrete D-41, D-42, D-43
Rip Rap D-40

DITCH
Brow, Type A and B D-75
Terrace, Type C and D D-75

DOWNDRAIN
Asphalt Concrete D-22
Flume D-23
Pipe D-24

DRINKING FOUNTAIN M-18

DRIVEWAY
Commercial G-26
Concrete G-14A, G-14B, G-14C
Location G-15, G-16
Width G-16

-E-

PEDESTAL
Electrical E-33
Irrigation Controller I-17

ENCASEMENT
Sewer Pipe S-7
Sewer Pipe, Undercut S-12

-F-

FENCE
Chain Link M-6
Debris Fence D-82
Details M-20
Tennis Court M-17

FIRE HYDRANT
6" Hydrant W-10
Locations W-11
Markers M-19

FRAME
Grate D-13
Manhole M-1, M-2, M-3

-G-

GRATE
Drainage D-15
Frame D-13
Tree Well L-4

GUARD RAIL, METAL BEAM
Connections M-40, M-41
Details M-36
End Anchors M-37, M-38, M-39
Flares M-34, M-35
Hardware M-32
Posts and Blocks M-33
Railing M-31
Standard M-30

GUTTER
Cross G-12
Cross, Mid-Block G-13
Separate from Curb G-1

-H-

HEADWALL
Gravity Type D-32, D-33
L Type D-36, D-37

INDEX

Straight, Type A, ... D-30, D-31

Warped D-44
Wing and U Type D-34, D-35

-I-

INLET APRON D-39

INLET, DRAIN
Corrugated Steel Pipe,
Type A & B D-16, D-17
Slotted, Corrugated
Steel Pipe D-18, D-19

-J-

JOINT TRENCH M-15

-L-

LATERAL
Sewer S-13
Sewer, Deep Cut S-14
Sewer, Repair S-15

LIGHTING
Grounding E-2
Light Pole Pad L-5
Standard E-1

LUG, CONCRETE D-63

-M-

MANHOLE, FRAME AND COVER
24" Heavy Duty M-1
24" Light Duty M-2
36" Concentric Covers M-3
Locking Device M-4

MANHOLE, SEWER
4' x 3' Diameter S-17
5' x 3' Diameter S-2

MEDIAN
Curb Inlet D-45
Curbs and Gutter G-6

METER BOX LOCATION W-15

METRIC EQUIVALENTS M-14

MONUMENT
Bench Mark M-11
Street Survey M-10
Survey M-13

MOWING STRIP
Concrete L-3

-P-

PARKING, DISABLED
Striping & Marking M-27A, M-27B, M-29
Sign M-28A, M-28B

PAVEMENT, CONCRETE
Alley Section G-21
Joints G-10
Width 40' or Less G-18
Width 40' to 62' G-19
Width 53' to 69' G-20

PEDESTAL, ELECTRICAL E-33

PIPE
Collar D-62
Lug D-63
Rounded Ends D-61
Slotted D-18, D-19

POST
Demountable M-16
Guard M-9
Protection W-16

-R-

RAILING
Pedestrian M-24, M-25

RETAINING WALL
Concrete C-11, C-12
Details, Concrete C-13, C-14
Details, Gravity C-10
Details, Masonry C-8
Gravity C-9
Masonry C-1, C-2, C-3, C-4, C-5, C-6
Masonry General Notes C-7

-S-

SERVICE, WATER
1" W-1
1-1/2" and 2" W-2

SEWER LATERAL S-13, S-14

SIDEWALK
Drain Outlet D-25
Joint Details G-10

INDEX

Joint Locations G-9

Monolithic Curb G-3
Pipe Underdrain D-27
Removal and Replacement G-11
Typical Section G-3, G-7

SPRINKLER
Above Ground Installation I-21, I-22, I-23
Connection, Main I-28, I-29
Head, Fixed Spray I-1
Head, Pop Up Rotary I-3
Head, Pop Up Spray I-2
Head, Impact I-19, I-30
Head, Shrub Rotary I-34
Pull Box, Electrical I-15
Trench Detail I-25, I-30

STAKING
Tree L-2

STEPS
Concrete M-26

STREET LIGHT
Standard E-1
Grounding E-2
Foundation E-2

-T-

TAPE LOCATOR, METALLIC
Sewer Pipe S-19
Water Pipe W-25

TENNIS COURT FENCE M-17

THRUST ANCHORS
Bearing Area W-18
Concrete W-17, W-19, W-20, W-22

TRENCH DETAILS
Irrigation I-25, I-26
Joint Trench Location M-15
Narrow, Resurfacing G-33
Resurfacing G-24, G-25
Sewer S-4
Slurry Backfill G-36
Storm Drain D-60
Water Main W-21

-U-

UNDERDRAIN, SIDEWALK
Pipe D-27
Concrete, Reinforced D-25

UNDERGROUND TYPICAL LOCATION
Location M-21
Replacement M-21
Upgrade M-21

UTILITY LOCATIONS
Collector Streets M-22
Expressways M-23
Joint Trench M-15
Local Streets M-22
Major Streets M-23
Prime Arterials M-23

-V-

VALVE, SPRINKLER
Gate I-12
Hose Bibb I-6
Manifold Assembly I-33
Manual I-13, I-21
Remote Control I-14
Quick Coupling I-27
Well I-27

-W-

WATER SERVICE
1" W-1
1 ½" and 2" W-2
Multiple W-23