GUIDANCE DOCUMENT

Since the 1980s, the County's fire and building codes have been strengthened in successive code adoption cycles with the primary goal of protecting the safety of our citizens and enhancing a home's ability to survive a wildfire. Although such measures protected many homes located within the areas impacted by the 2003 and 2007 wildfires, analysis of the burned homes identified areas where we could improve our codes; one of these areas is eave construction.

Winds in wildfires carry huge amounts of burning embers, swirling into cracks and crevices, igniting anything that is combustible. Eaves, because they are perpendicular to the wall, tend to capture blowing embers. Eave vents, which are designed to move air in and out of the attic, give opportunity for embers to ignite soffit material or enter attic areas. Once a fire starts in an attic, it goes undetected for some time and is very difficult to stop even under ideal conditions.

As a result, improvements were made to the County's codes to establish a series of permissible ignition resistant eave construction details. To determine which detail will be allowed on your structure, first determine whether you are able to maintain 100 feet of defensible space completely around the structure in accordance with the Fuel Modification requirements of the County Fire Code. The fuel modification zone shall be located entirely on the subject property.

- **When 100 foot of defensible space will be provided** any of the details listed in the following Ignition Resistant Eave Construction chart may be used.
- **When 100 foot of defensible space is not provided.** While it is always desirable to have at least 100 feet of defensible space around all structures in the Wildland-Urban Interface Fire Area, there are situations where the required fuel modification cannot be achieved on the parcel, or where steep terrain, high fuel loads, or other special circumstances create additional hazard. In these cases only the most ignition resistive details may be used.

Once you have determined the amount of defensible space that can be created on your property, consult the attached Ignition Resistant Eave Construction chart for a listing of the different types of eave construction that will be allowed for your structure. For every eave description in the chart there is a corresponding detail attached. In addition, each detail can be downloaded individually in AutoCAD DWG file format at: http://www.co.san-diego.ca.us/pds/bldgforms/eaveindex.html.

Eave construction on an addition may match the existing structure provided that the area of the addition does not exceed 50% of the existing structure or 2,500 square feet, whichever is less. The vents in these eaves must still comply with current County codes requiring resistance to intrusion of flames and embers.

While these standards will provide a high level of protection to structures built in the wildland-urban interface area, there is no guarantee that compliance with these standards will prevent damage or destruction of structures by fire in all cases. For more information on eave construction or other fire code requirements, please refer to the Wildland-Urban Interface – 2008 Code Changes handout (PDS #664) or contact the Fire Services Division at (858) 565-5920.

#	EAVE CONSTRUCTION DESCRIPTION	WITH 100'		WITHOUT 100'	
		Eave Allowed?	Vent Allowed?	Eave Allowed?	Vent Allowed?
1	**Stucco Soffit with Fascia Protected.** Horizontal soffit or angled overhang and 2x fascia enclosed with 7/8" Portland cement plaster	Y	Y[1]	Y	N[2]
2	**Stucco Soffit with Fascia Exposed.** Horizontal soffit or angled overhang with 7/8" Portland cement plaster, exposed 2x fascia	Y	Y[1]	NOT ALLOWED	
3	**Foam Trim with Stucco.** 7/8" Portland cement plaster with foam trim over brown coat and enclosed with color coat	Y	N	Y	N[2]
4	**Heavy Timber.** Exposed rafter tails (4 x 6 or larger), supporting 2" T&G roof decking (If fascia is used it must be 3 x 6 or larger)	Y	N	Y	N[2]
5	**Exposed Wood with Drywall Underlayment.** Soffit enclosed with ½" Type X gypsum wallboard under 1x smooth finished starterboard, tight-fitting or caulked. 2x fascia.	Y	Y[1]	NOT ALLOWED	
6	**Wood Soffit, Fascia Exposed, with Fire-Resistive Underlayment.** 2x wood fascia as plant-on over 5/8" Type X gypsum wallboard or 7/8" Portland cement plaster or 2-2x wood blocking. Soffit may be constructed of combustible material with a 1/4" minimum thickness over 5/8" Type X gypsum wallboard or 7/8" Portland cement plaster.	Y	Y[1]	Y	N[2]
7	**Cementitious Siding on Soffit and as Underlayment Behind Fascia.** 1/4" min. thickness non-combustible cementitious siding on soffit. 2x wood fascia installed over backing of cementitious siding backing or other backing as approved in detail #6.	Y	Y[1]	Y	N[2]
8	**Cementitious Siding on Soffit** 1/4" min. thickness non-combustible cementitious siding – 2x fascia without underlayment	Y	Y[1]	NOT ALLOWED	
9	**Enclosed Eave with Exposed Wood.** Enclosed eave with solid combustible materials (wood) ¾ inch thickness – no exposed rafter tails. All joints must be tight fitting and gaps caulked.	Y	Y[1]	NOT ALLOWED	
10	**Open Eave with Exposed Wood.** 2x rafter tails with 2x blocking, and 1x exterior grade starterboard or 1/2" CCX plywood. All joints must be tight fitting and gaps caulked.	Y	Y[1]	NOT ALLOWED	
11	**Fire Retardant Treated Wood Fascia.** 1/4"" min. thickness non-combustible cementitious siding or 7/8" Portland cement plaster on soffit. 2x Fire Retardant Treated Wood fascia installed over 2x non- treated backing block.	Y	Y[1]	Y	N[2]

[1] Vents are allowed in the eave assembly only under either of the following conditions:

a) The vents are constructed to resist the intrusion of flames and burning embers.

b) When approved by the Building Official and the Fire Official, enclosed eaves may be vented on the underside of the eave closest to the fascia provided the closest edge of the vent opening is at least 12 inches from the exterior wall.

[2] Exception: Vents are allowed in these eave assemblies only when they are constructed to resist the intrusion of flames and burning embers.

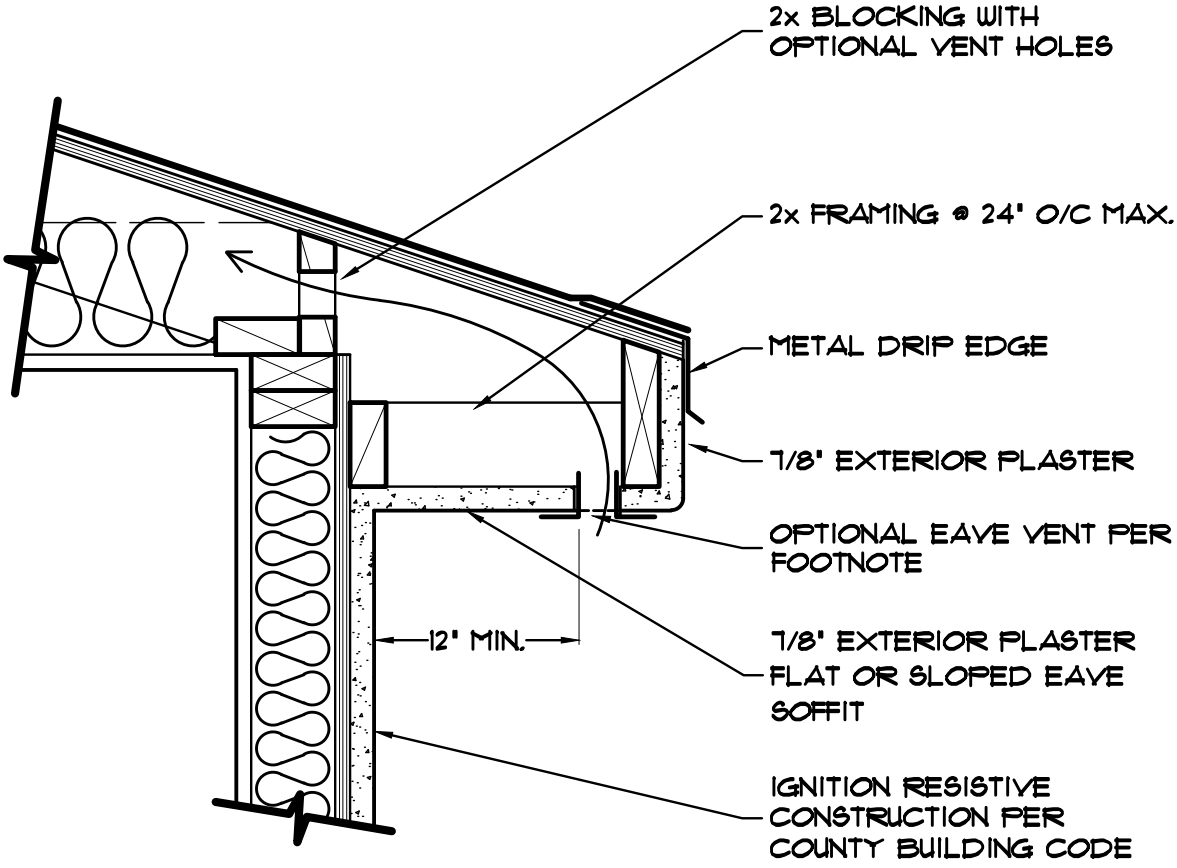

VENTS ARE PERMITTED IN THE EAVE ONLY UNDER EITHER OF THE FOLLOWING CONDITIONS:

A) THE VENTS ARE CONSTRUCTED TO RESIST THE INSTRUSION OF FLAMES AND BURNING EMBERS.

B) WHEN APPROVED BY THE BUILDING OFFICIAL AND THE FIRE OFFICIAL, ENCLOSED EAVES MAY BE VENTED ON THE UNDERSIDE OF THE EAVE CLOSEST TO THE FASCIA PROVIDED THE CLOSEST EDGE OF THE VENT OPENING IS AT LEAST 12 INCHES FROM THE EXTERIOR WALL.

DATE: 09-24-2012	**DETAIL 1 -** MUST HAVE AT LEAST 100' OF DEFENSIBLE SPACE ON SITE
SCALE: NONE	
FORM: PDS 198	
3 OF 16 SHEETS	**STUCCO SOFFIT WITH FASCIA PROTECTED**

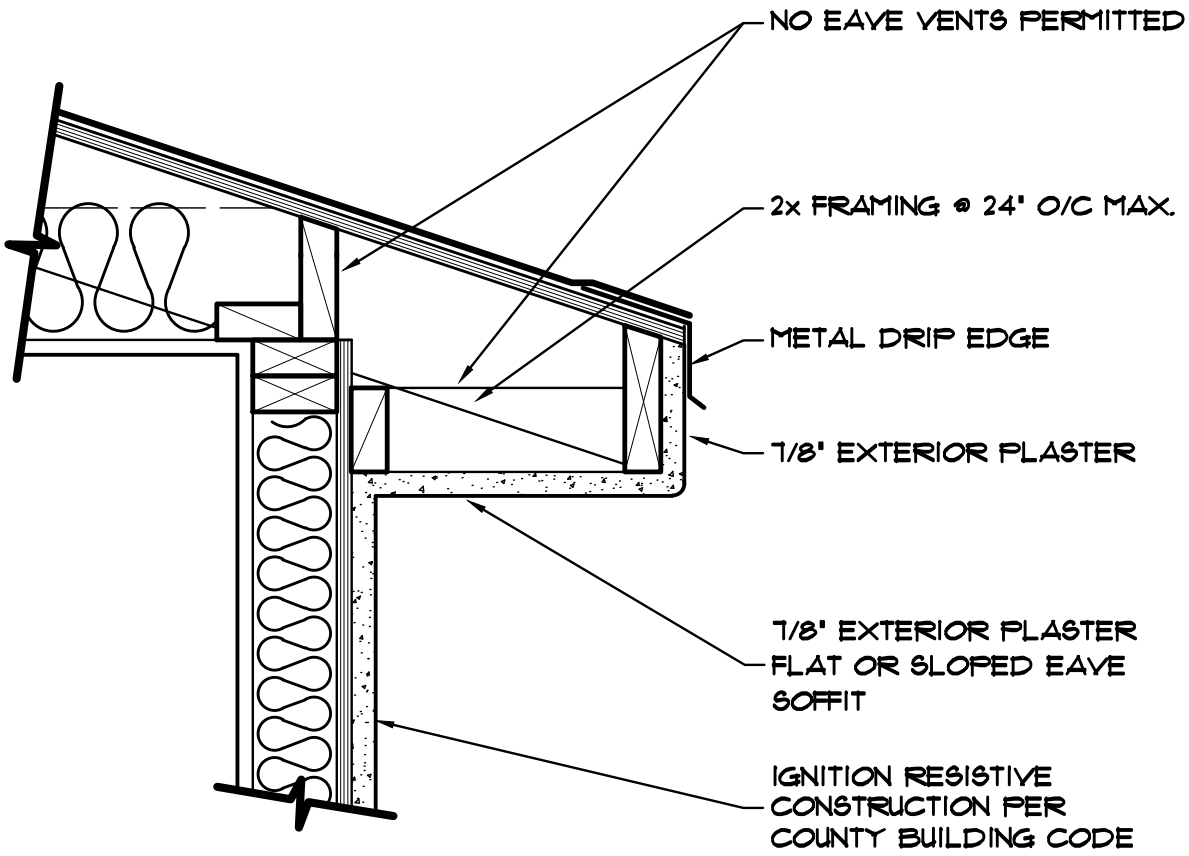

DATE: 09-24-2012	**DETAIL 1 -** ALLOWED EVERYWHERE
SCALE: NONE	
FORM: PDS 198	
4 OF 16 SHEETS	**STUCCO SOFFIT WITH FASCIA PROTECTED**

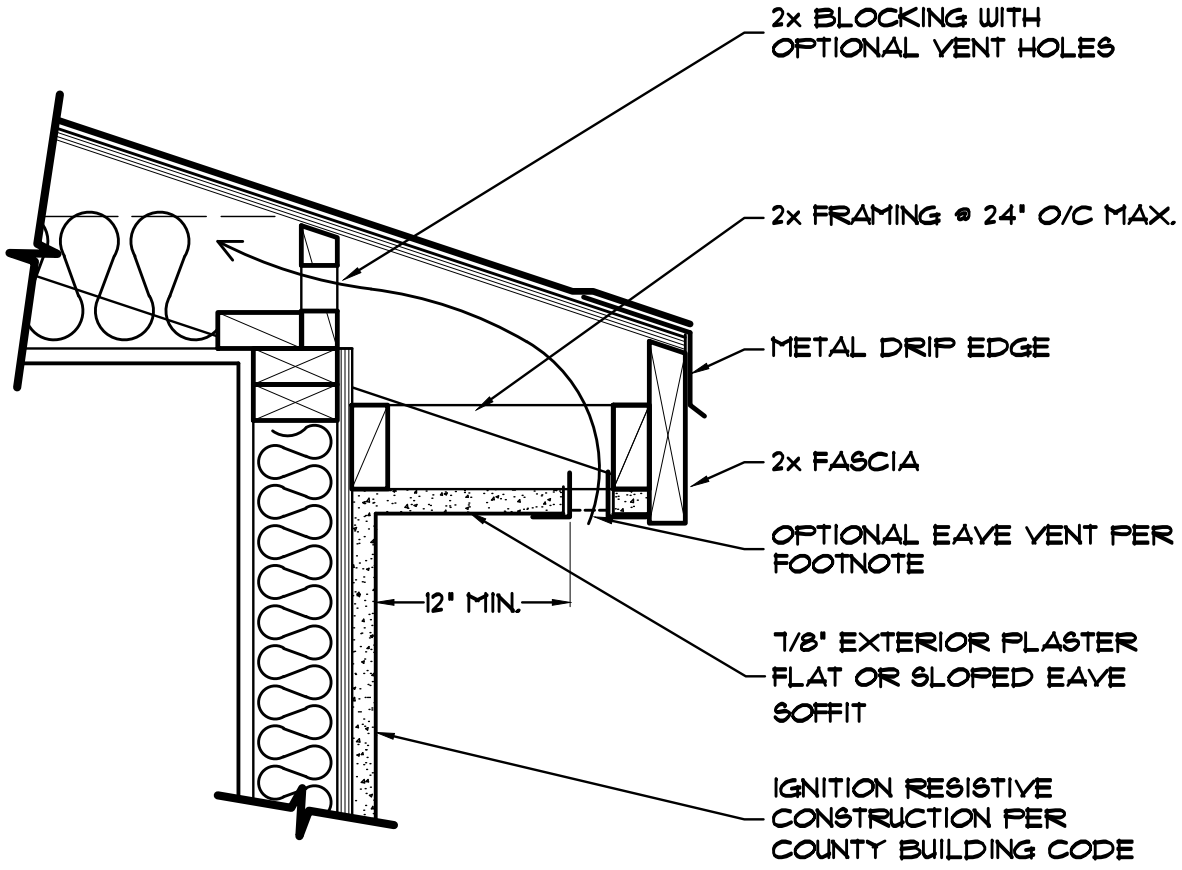

VENTS ARE PERMITTED IN THE EAVE ONLY UNDER EITHER OF THE FOLLOWING CONDITIONS:

A) THE VENTS ARE CONSTRUCTED TO RESIST THE INSTRUSION OF FLAMES AND BURNING EMBERS.

B) WHEN APPROVED BY THE BUILDING OFFICIAL AND THE FIRE OFFICIAL, ENCLOSED EAVES MAY BE VENTED ON THE UNDERSIDE OF THE EAVE CLOSEST TO THE FASCIA PROVIDED THE CLOSEST EDGE OF THE VENT OPENING IS AT LEAST 12 INCHES FROM THE EXTERIOR WALL.

DATE: 09-24-2012	**DETAIL 2 -** MUST HAVE AT LEAST 100' OF DEFENSIBLE SPACE ON SITE
SCALE: NONE	
FORM: PDS 198	
5 OF 16 SHEETS	**STUCCO SOFFIT WITH FASCIA EXPOSED**

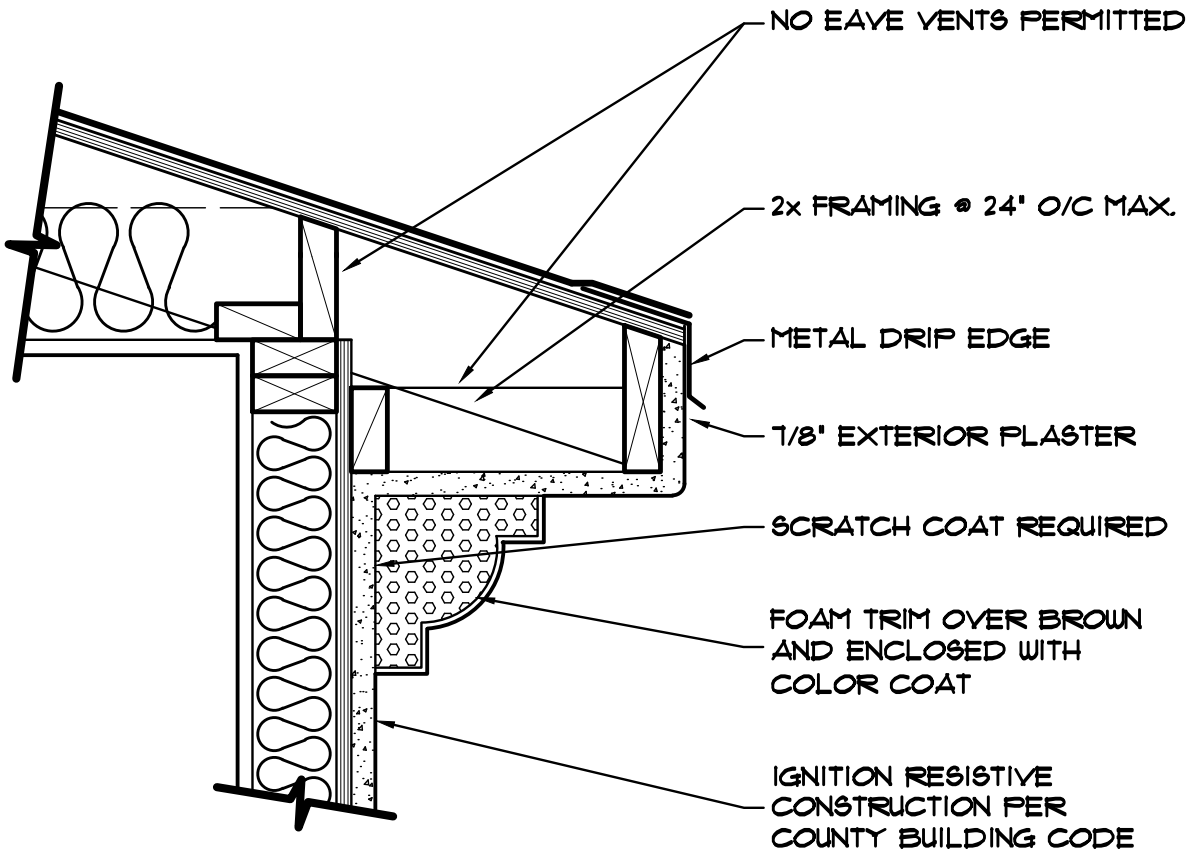

DATE: 09-24-2012	**DETAIL 3 -** ALLOWED EVERYWHERE
SCALE: NONE	
FORM: PDS 198	
6 OF 16 SHEETS	**FOAM TRIM WITH STUCCO**

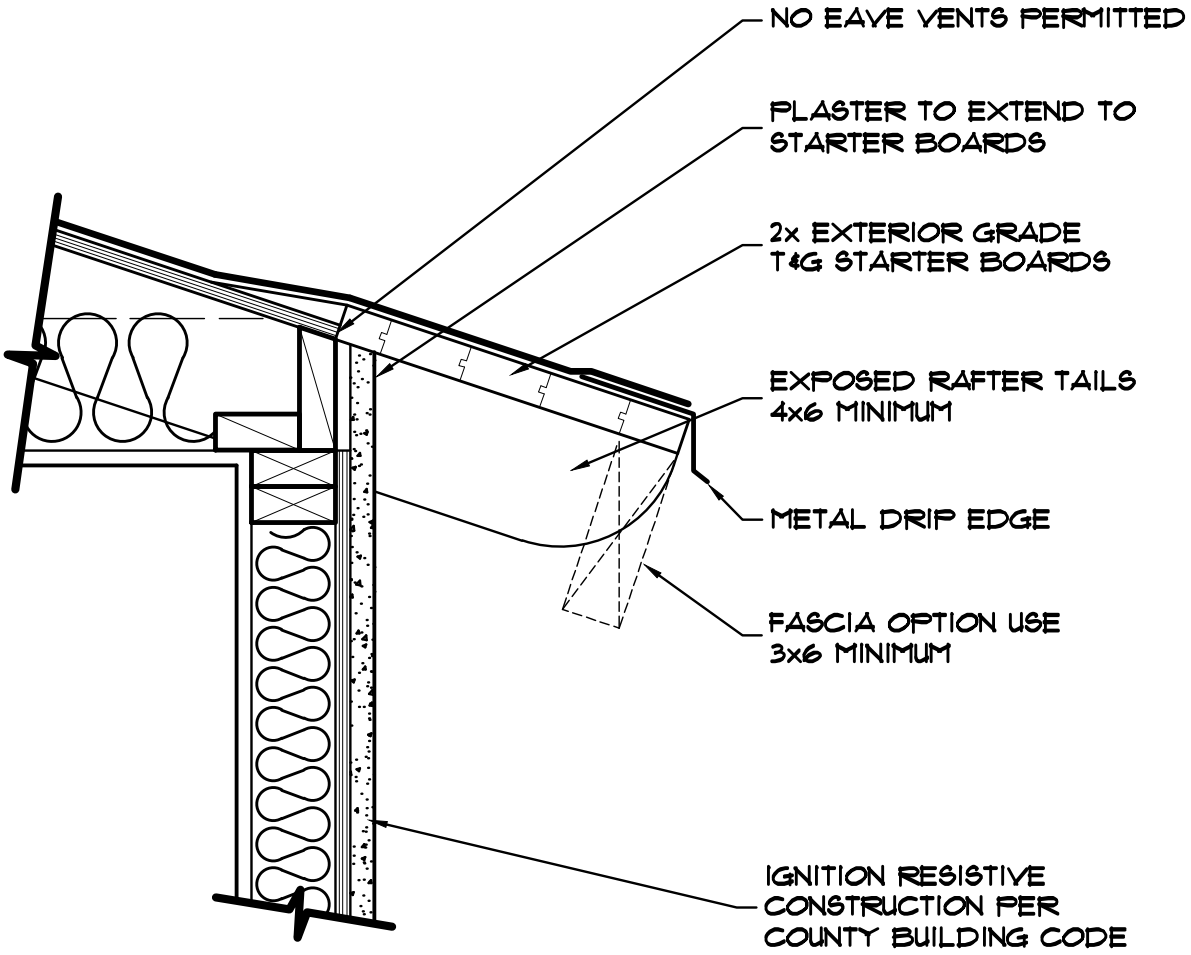

DATE: 09-24-2012	**DETAIL 4 - ALLOWED EVERYWHERE**
SCALE: NONE	
FORM: PDS 198	
7 OF 16 SHEETS	**HEAVY TIMBER**

NOTE: ALL JOINTS MUST BE TIGHT FITTING AND CAULKED

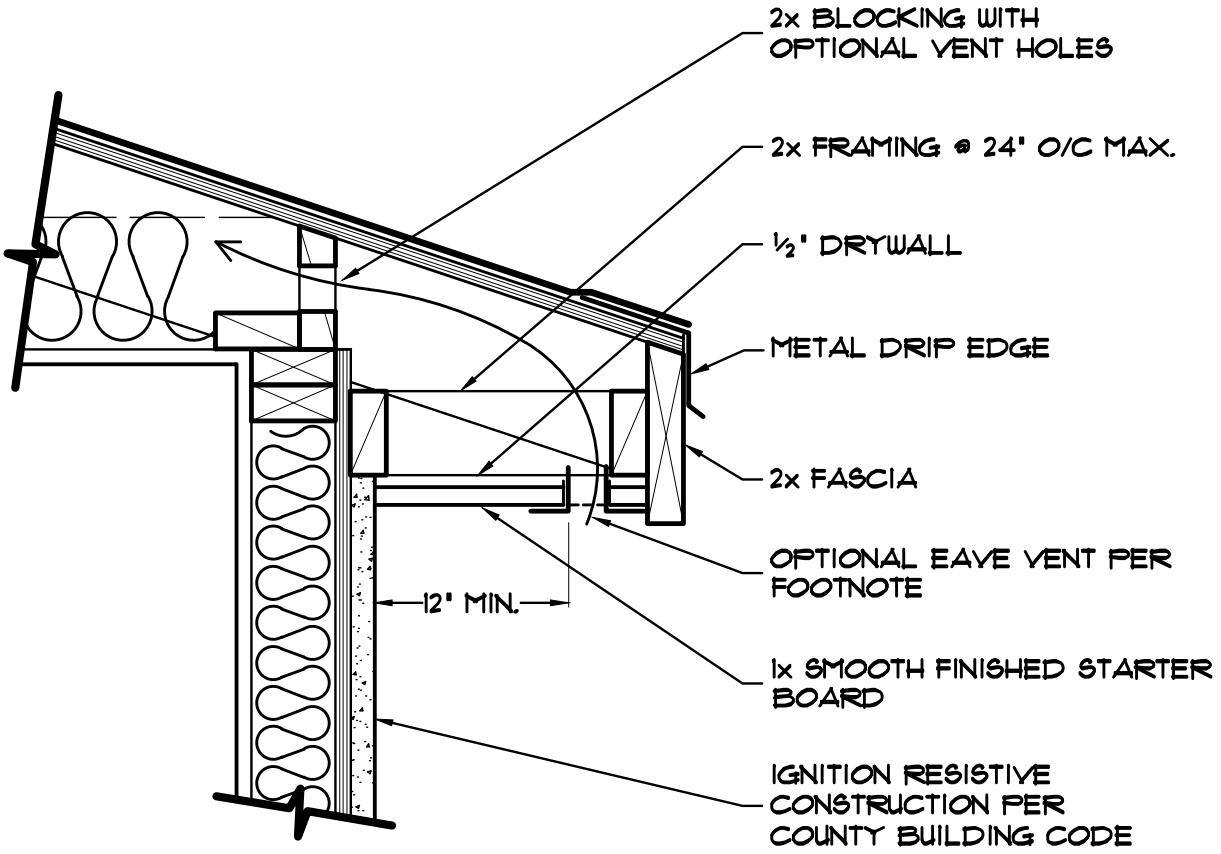

VENTS ARE PERMITTED IN THE EAVE ONLY UNDER EITHER OF THE FOLLOWING CONDITIONS:

A) THE VENTS ARE CONSTRUCTED TO RESIST THE INSTRUSION OF FLAMES AND BURNING EMBERS.

B) WHEN APPROVED BY THE BUILDING OFFICIAL AND THE FIRE OFFICIAL, ENCLOSED EAVES MAY BE VENTED ON THE UNDERSIDE OF THE EAVE CLOSEST TO THE FASCIA PROVIDED THE CLOSEST EDGE OF THE VENT OPENING IS AT LEAST 12 INCHES FROM THE EXTERIOR WALL.

DATE: 09-24-2012	**DETAIL 5 -** MUST HAVE AT LEAST 100' OF DEFENSIBLE SPACE ON SITE
SCALE: NONE	
FORM: PDS 198	
8 OF 16 SHEETS	**EXPOSED WOOD WITH DRYWALL UNDERLAYMENT**

NOTE: ALL JOINTS MUST BE TIGHT FITTING AND CAULKED

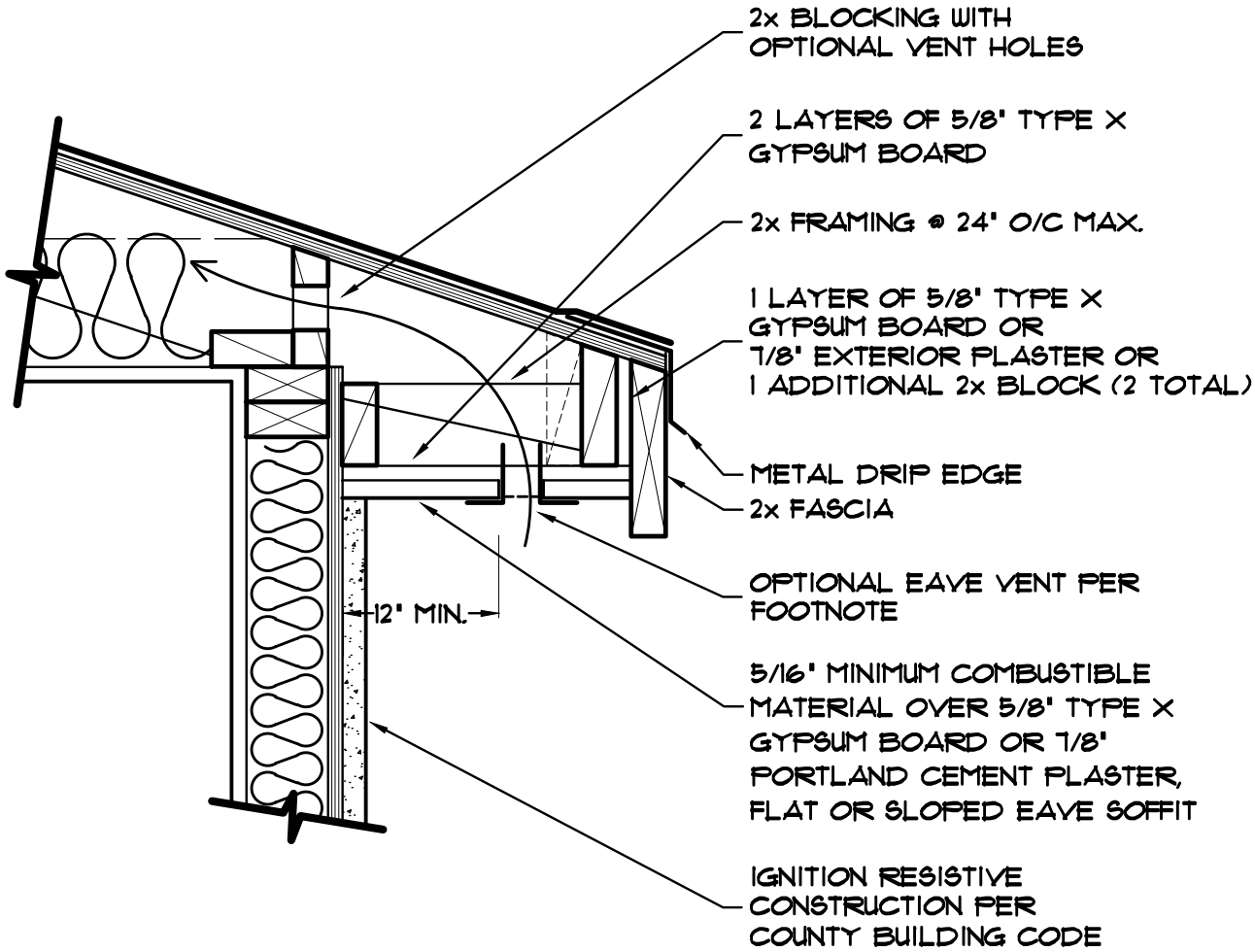

VENTS ARE PERMITTED IN THE EAVE ONLY UNDER EITHER OF THE FOLLOWING CONDITIONS:

A) THE VENTS ARE CONSTRUCTED TO RESIST THE INSTRUSION OF FLAMES AND BURNING EMBERS.

B) WHEN APPROVED BY THE BUILDING OFFICIAL AND THE FIRE OFFICIAL, ENCLOSED EAVES MAY BE VENTED ON THE UNDERSIDE OF THE EAVE CLOSEST TO THE FASCIA PROVIDED THE CLOSEST EDGE OF THE VENT OPENING IS AT LEAST 12 INCHES FROM THE EXTERIOR WALL.

DATE: 09-24-2012	**DETAIL 6 -** MUST HAVE AT LEAST 100' OF DEFENSIBLE SPACE ON SITE
SCALE: NONE	
FORM: PDS 198	
9 OF 16 SHEETS	**WOOD SOFFIT FASCIA EXPOSED WITH FIRE RESISTIVE UNDERLAYMENT**

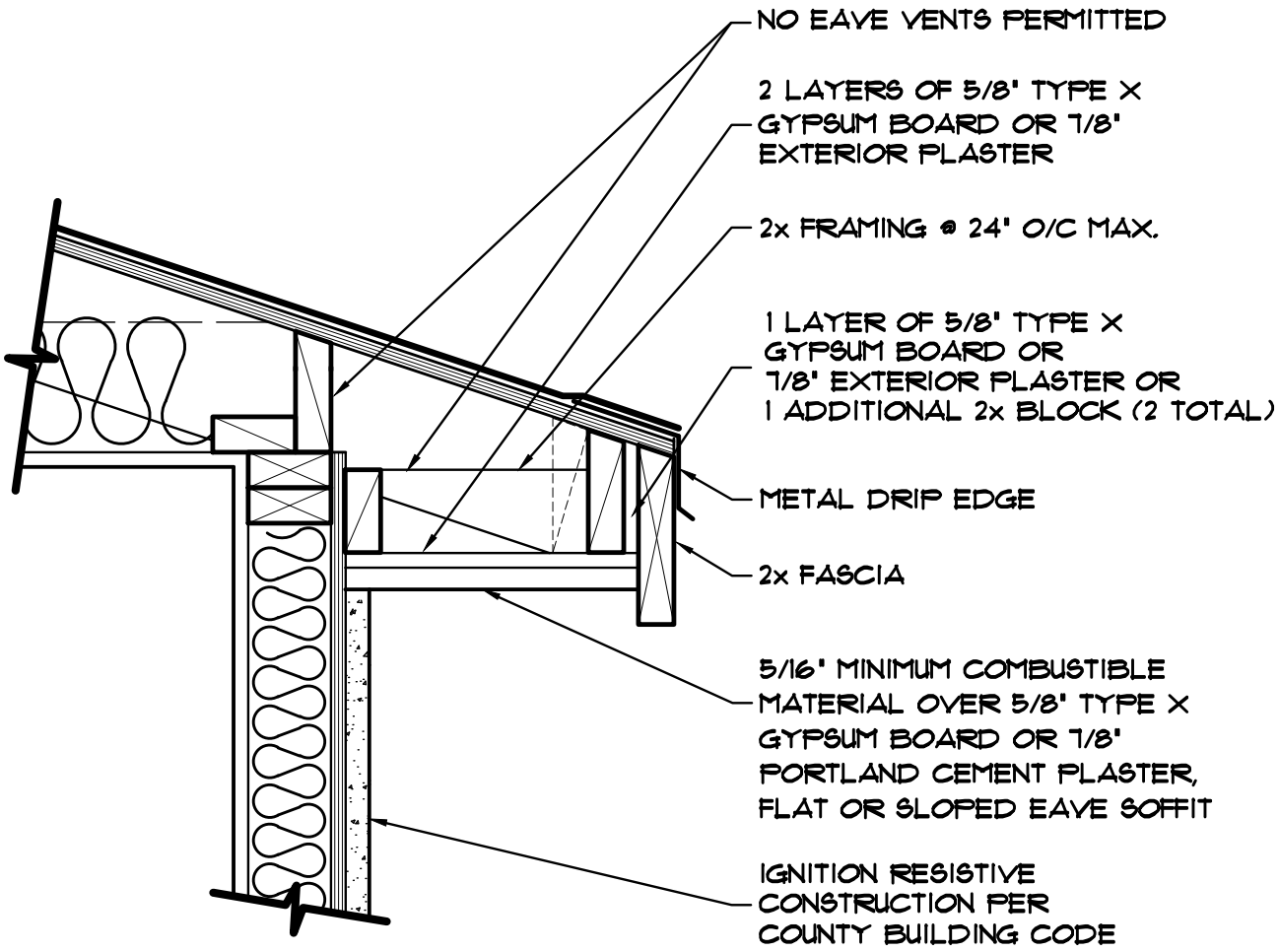

DATE: 09-24-2012	**DETAIL 6 -** ALLOWED EVERYWHERE
SCALE: NONE	
FORM: PDS 198	
10 OF 16 SHEETS	**WOOD SOFFIT FASCIA EXPOSED WITH FIRE RESISTIVE UNDERLAYMENT**

NOTE: ALL JOINTS MUST BE TIGHT FITTING AND CAULKED

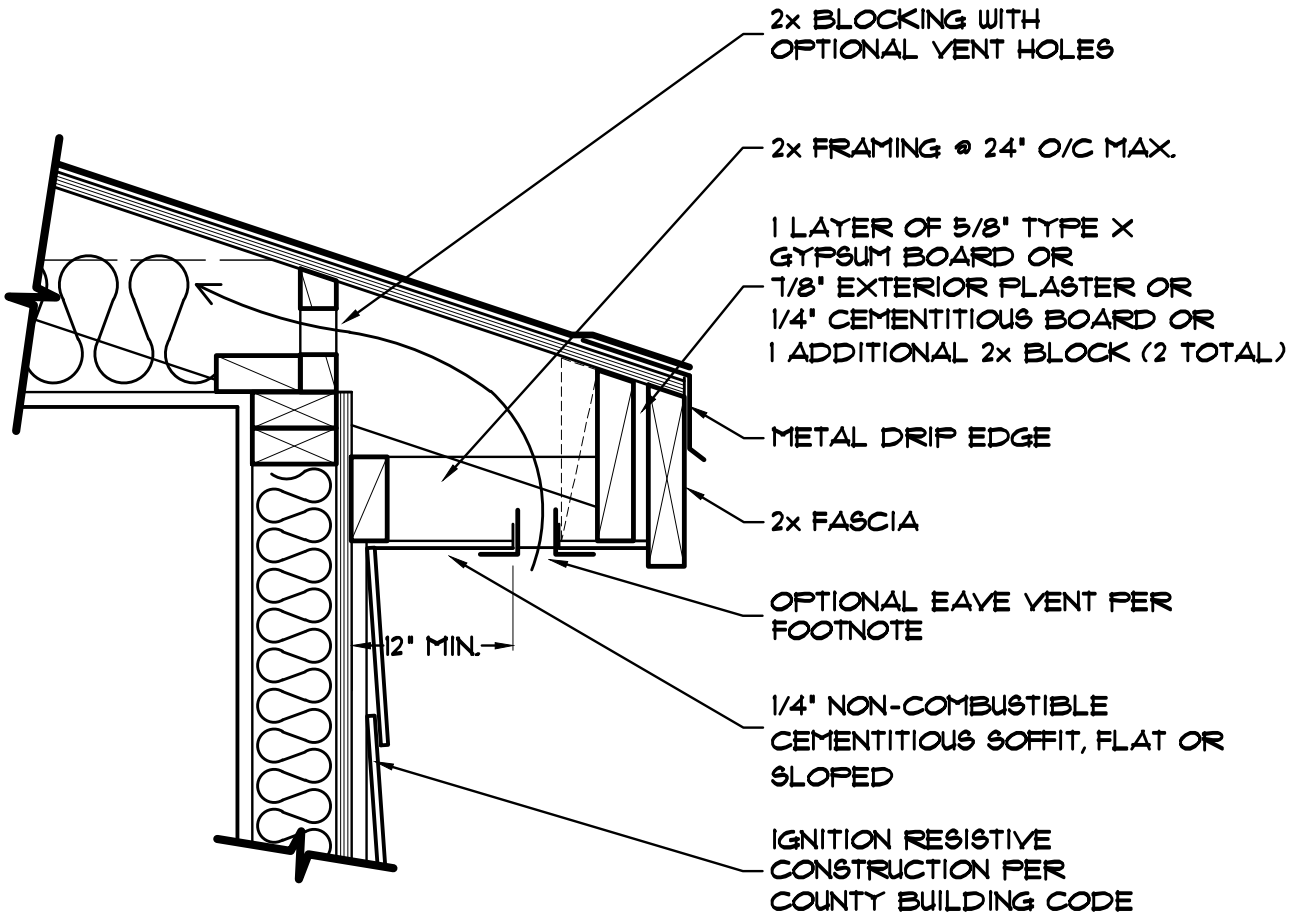

VENTS ARE PERMITTED IN THE EAVE ONLY UNDER EITHER OF THE FOLLOWING CONDITIONS:

A) THE VENTS ARE CONSTRUCTED TO RESIST THE INSTRUSION OF FLAMES AND BURNING EMBERS.

B) WHEN APPROVED BY THE BUILDING OFFICIAL AND THE FIRE OFFICIAL, ENCLOSED EAVES MAY BE VENTED ON THE UNDERSIDE OF THE EAVE CLOSEST TO THE FASCIA PROVIDED THE CLOSEST EDGE OF THE VENT OPENING IS AT LEAST 12 INCHES FROM THE EXTERIOR WALL.

DATE: 09-24-2012	**DETAIL 7 -** MUST HAVE AT LEAST 100' OF DEFENSIBLE SPACE ON SITE
SCALE: NONE	
FORM: PDS 198	
11 OF 16 SHEETS	**CEMENTITIOUS SIDING ON SOFFIT AND AS UNDERLAYMENT BEHIND FASCIA**

NOTE: ALL JOINTS MUST BE TIGHT FITTING AND CAULKED

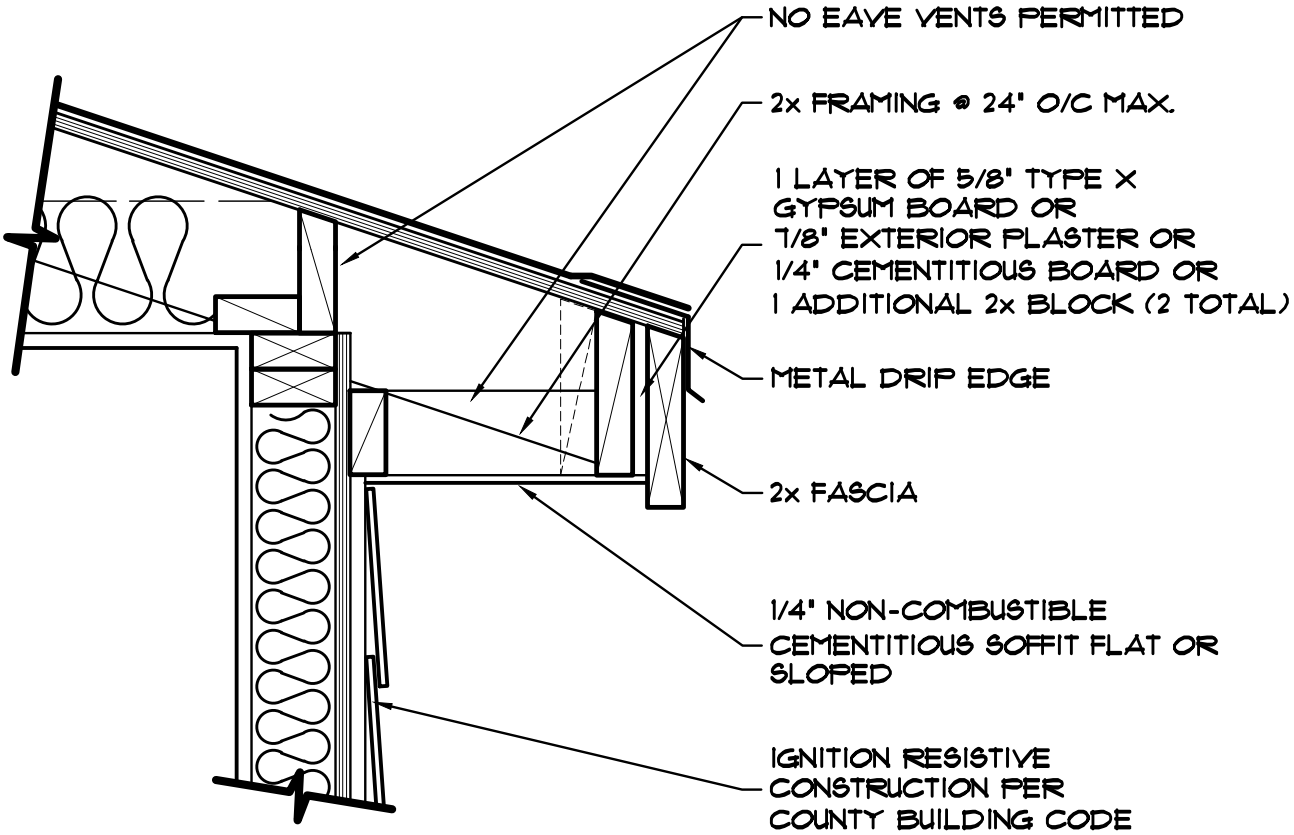

DATE: 09-24-2012	**DETAIL 7 -** ALLOWED EVERYWHERE
SCALE: NONE	
FORM: PDS 198	
12 OF 16 SHEETS	**CEMENTITIOUS SIDING ON SOFFIT AND AS UNDERLAYMENT BEHIND FASCIA**

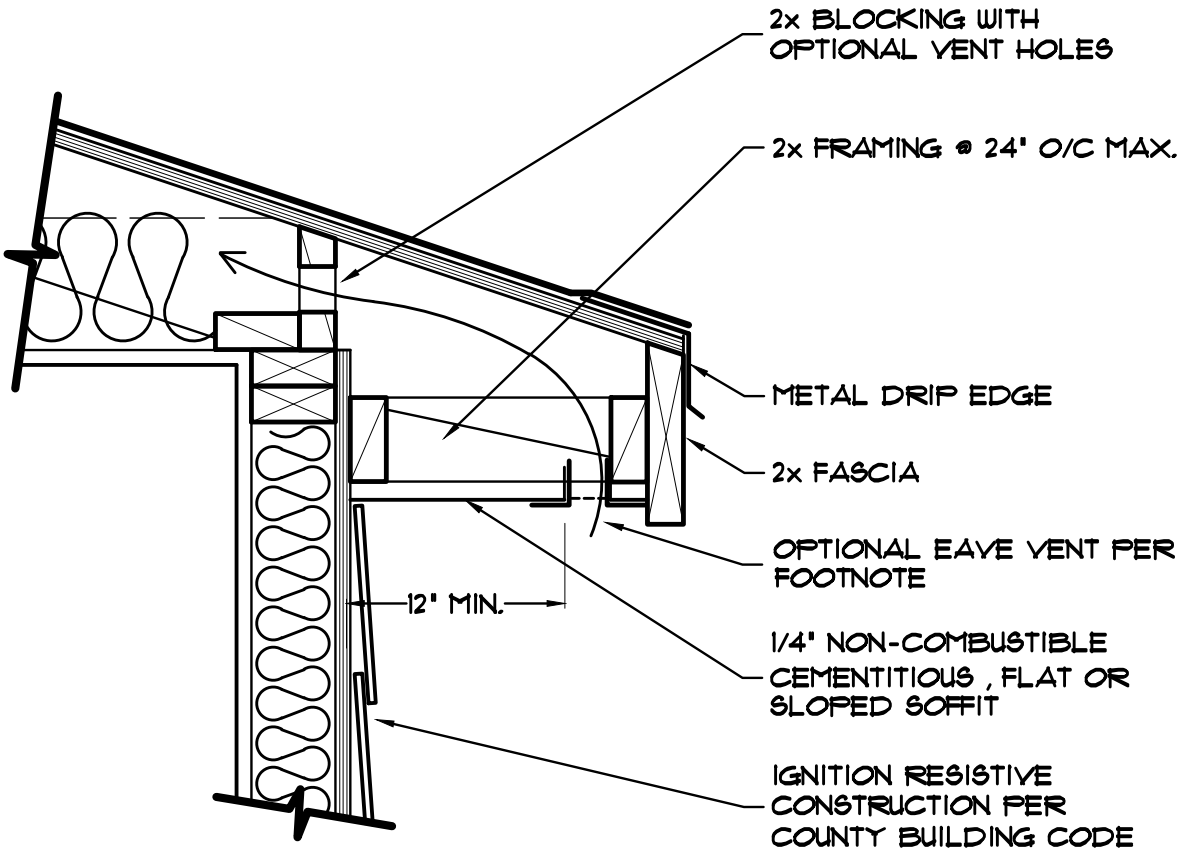

VENTS ARE PERMITTED IN THE EAVE ONLY UNDER EITHER OF THE FOLLOWING CONDITIONS:

A) THE VENTS ARE CONSTRUCTED TO RESIST THE INSTRUSION OF FLAMES AND BURNING EMBERS.

B) WHEN APPROVED BY THE BUILDING OFFICIAL AND THE FIRE OFFICIAL, ENCLOSED EAVES MAY BE VENTED ON THE UNDERSIDE OF THE EAVE CLOSEST TO THE FASCIA PROVIDED THE CLOSEST EDGE OF THE VENT OPENING IS AT LEAST 12 INCHES FROM THE EXTERIOR WALL.

DATE: 09-24-2012	**DETAIL 8 -** MUST HAVE AT LEAST 100' OF DEFENSIBLE SPACE ON SITE
SCALE: NONE	
FORM: PDS 198	
13 OF 16 SHEETS	**CEMENTITIOUS SIDING ON SOFFIT**

NOTE: ALL JOINTS MUST BE TIGHT FITTING AND CAULKED

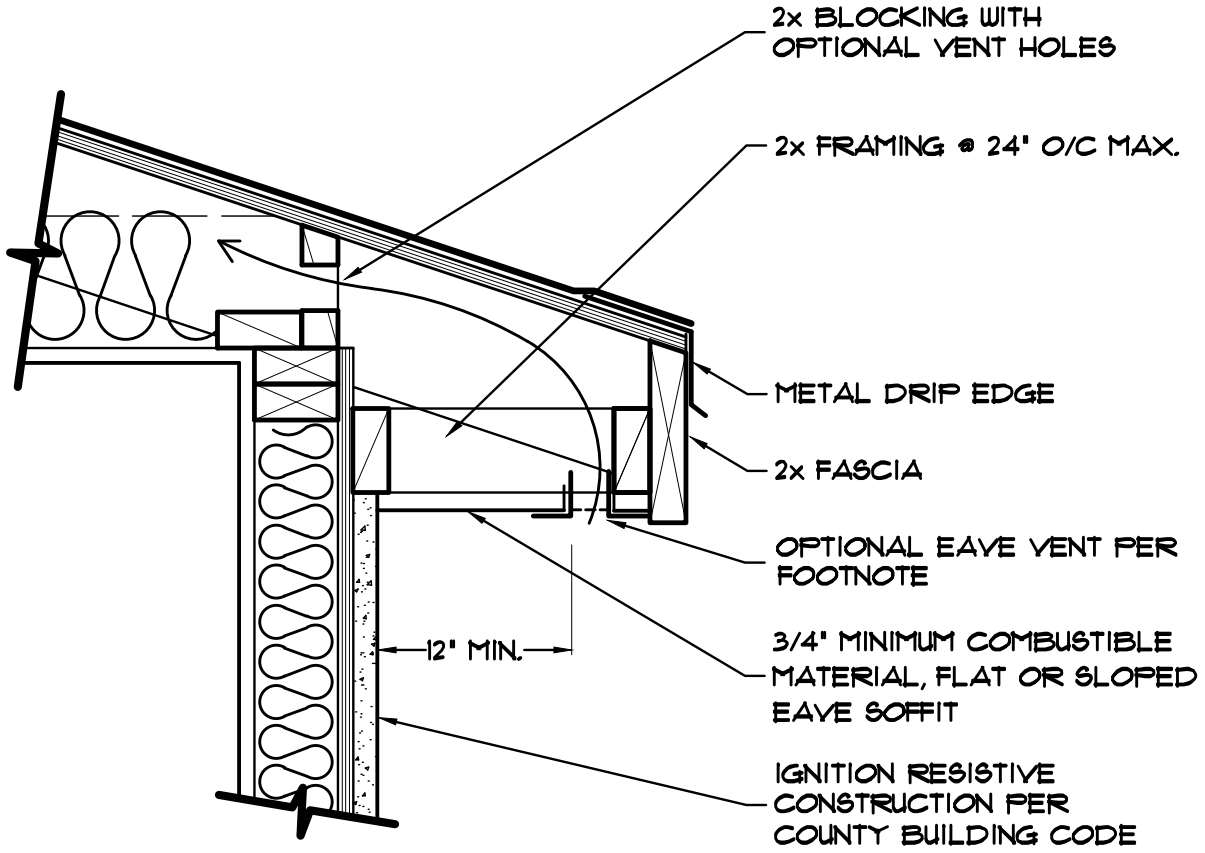

VENTS ARE PERMITTED IN THE EAVE ONLY UNDER EITHER OF THE FOLLOWING CONDITIONS:

A) THE VENTS ARE CONSTRUCTED TO RESIST THE INSTRUSION OF FLAMES AND BURNING EMBERS.

B) WHEN APPROVED BY THE BUILDING OFFICIAL AND THE FIRE OFFICIAL, ENCLOSED EAVES MAY BE VENTED ON THE UNDERSIDE OF THE EAVE CLOSEST TO THE FASCIA PROVIDED THE CLOSEST EDGE OF THE VENT OPENING IS AT LEAST 12 INCHES FROM THE EXTERIOR WALL.

DATE: 09-24-2012	**DETAIL 9 -** MUST HAVE AT LEAST 100' OF DEFENSIBLE SPACE ON SITE
SCALE: NONE	
FORM: PDS 198	
14 OF 16 SHEETS	**ENCLOSED EAVE WITH EXPOSED WOOD**

NOTE: ALL JOINTS MUST BE TIGHT FITTING AND CAULKED

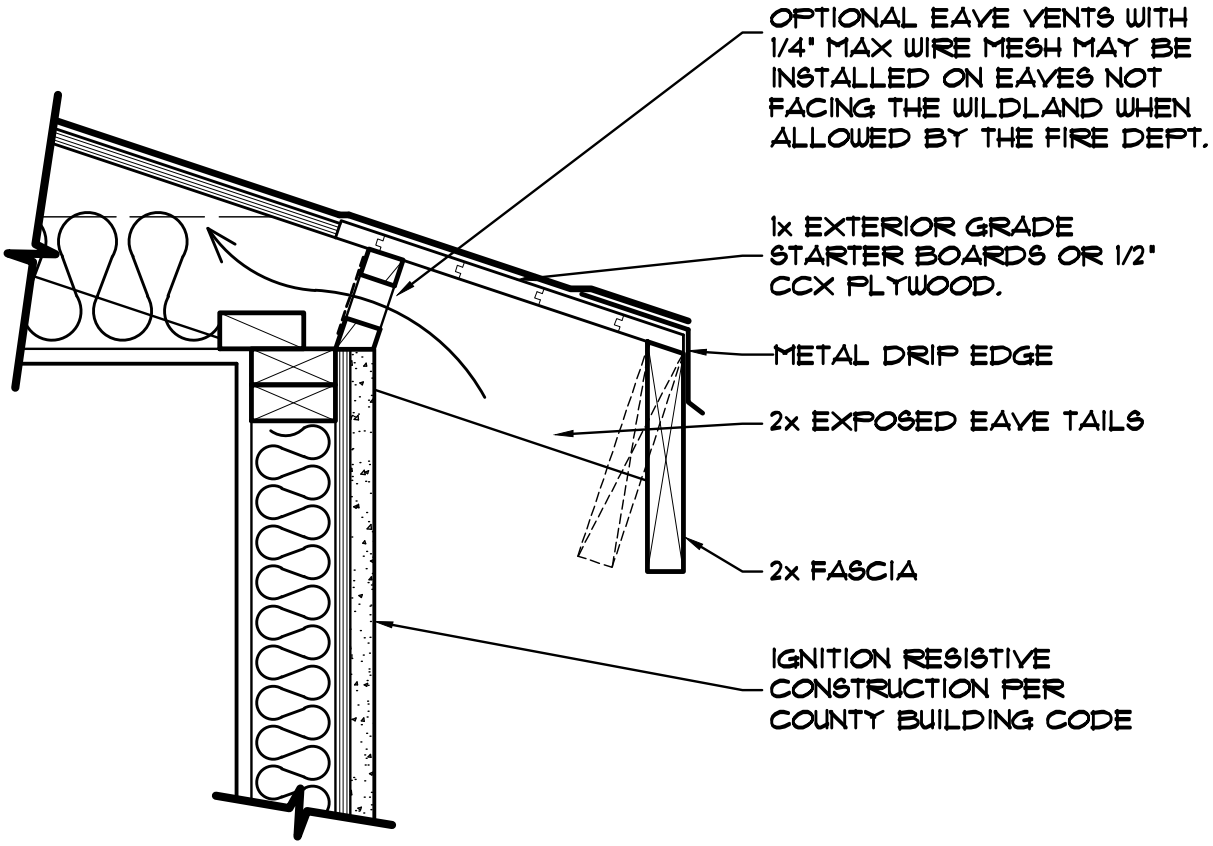

VENTS ARE PERMITTED IN THE EAVE ONLY UNDER EITHER OF THE FOLLOWING CONDITIONS:

A) THE VENTS ARE CONSTRUCTED TO RESIST THE INSTRUSION OF FLAMES AND BURNING EMBERS.

B) WHEN APPROVED BY THE BUILDING OFFICIAL AND THE FIRE OFFICIAL, ENCLOSED EAVES MAY BE VENTED ON THE UNDERSIDE OF THE EAVE CLOSEST TO THE FASCIA PROVIDED THE CLOSEST EDGE OF THE VENT OPENING IS AT LEAST 12 INCHES FROM THE EXTERIOR WALL.

DATE: 09-24-2012	**DETAIL 10 -** MUST HAVE AT LEAST 100' OF DEFENSIBLE SPACE ON SITE
SCALE: NONE	
FORM: PDS 198	
15 OF 16 SHEETS	**OPEN EAVE WITH EXPOSED WOOD**

NOTE: ALL JOINTS MUST BE TIGHT FITTING AND CAULKED

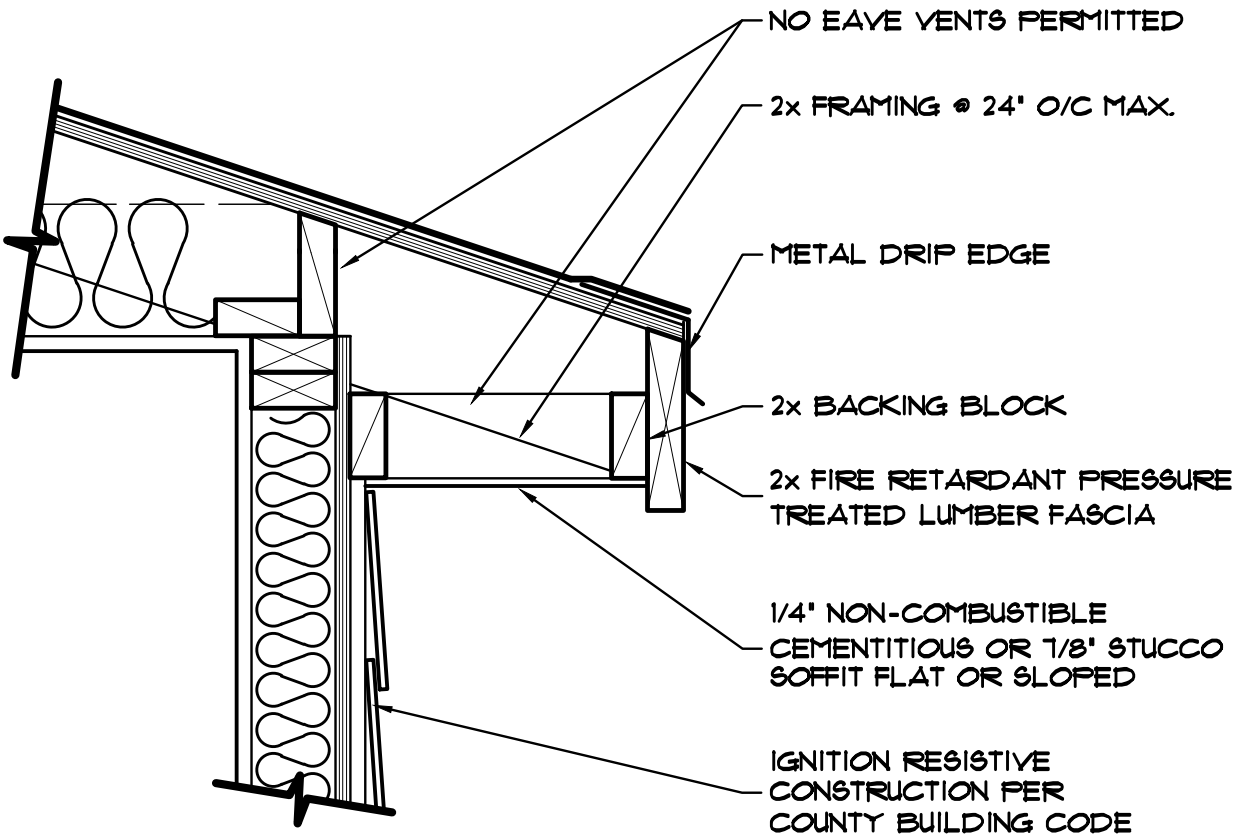

FIRE RETARDANT LUMBER:
USE EITHER EXTERIOR FIRE-X RETARDANT TREATED LUMBER, CA SFM LISTING 2520-1701:100, OR FRX FIRE RETARDANT TREATED WOOD, ESR-1159.

ALL FIRE RETARDANT TREATED LUMBER SHALL NOT TO BE LEFT UNFINISHED.

DATE: 09-24-2012	**DETAIL 11 -** ALLOWED EVERYWHERE
SCALE: NONE	
FORM: PDS 198	
16 OF 16 SHEETS	**EXPOSED FIRE RETARDANT TREATED WOOD FASCIA**