COUNTY OF SAN DIEGO • DEPARTMENT OF PLANNING AND LAND USE
BUILDING DIVISION

# GUIDANCE DOCUMENT
# IGNITION RESISTANT EAVE CONSTRUCTION

Since the 1980s, the County's fire and building codes have been strengthened in successive code adoption cycles with the primary goal of protecting the safety of our citizens and enhancing a home's ability to survive a wildfire. Although such measures protected many homes located within the areas impacted by the 2003 Cedar/Paradise Fire, analysis of the burned homes identified areas where we could improve our codes; one of these areas is eave construction.

Winds in wildfires carry huge amounts of burning embers, swirling into cracks and crevices, igniting anything that is combustible. Eaves, because they are perpendicular to the wall, tend to capture blowing embers. Eave vents, which are designed to move air in and out of the attic, give opportunity for embers to ignite soffit material or enter attic areas. Once a fire starts in an attic, it goes undetected for some time and is very difficult to stop even under ideal conditions.

As a result, improvements were made to the County's building and fire codes to establish a series of permissible ignition resistant eave construction details. To determine what detail will be permitted on your structure, you must first determine whether you are subject to the "Basic" or "Enhanced" fire-resistive construction requirements of the code.

- **"Basic"** fire-resistive construction requirements are applied to all buildings that are located within the Wildland Urban Interface area. The Wildland-Urban Interface is an area where combustible vegetation increases the possibility of a vegetation conflagration – uncontrolled fire spreading through vegetation fuels, exposing and consuming structures in the advancing path of flame.

- **"Enhanced"** fire-resistive construction requirements are applied to all buildings that are located within the Wildland Urban Interface area <u>and</u> where 100' clearance around all structures cannot be achieved on the parcel, or where steep terrain or other special circumstances create additional hazard, or there is the presence of high fuel loads.

Once you have determined what construction tier applies to your project, consult the attached Ignition Resistant Eave Construction chart for a listing of the different types of eave construction that will be permitted for your structure. For every eave description in the chart there is a corresponding detail attached. In addition, each detail can be downloaded individually in AutoCAD DWG file format at: http://www.co.san-diego.ca.us/dplu/bldgforms/index.html.

While these standards will provide a high level of protection to structures built in the wildland/urban interface area; there is no guarantee or assurance that compliance with these standards will prevent damage or destruction of structures by fire in all cases. For more information on eave construction or other fire code requirements, please refer to the County's Wildland-Urban Interface – 2004 Code Changes summary document (DPLU #664) or contact the County's Building Department, Fire Services Division at (858) 565-5920.

5201 RUFFIN ROAD, SUITE B, SAN DIEGO, CA 92123-1666 ●(858) 565-5920 ● (888) 336-7553
200 EAST MAIN ST.- SIXTH FLOOR, EL CAJON, CA 92020-3912 ● (619) 441-4030
338 VIA VERA CRUZ - SUITE 201, SAN MARCOS, CA 92069-2620 ● (760) 471-0730

COUNTY OF SAN DIEGO • DEPARTMENT OF PLANNING AND LAND USE
BUILDING DIVISION

# IGNITION RESISTANT EAVE CONSTRUCTION

| | | BASIC | | ENHANCED | |
|---|---|---|---|---|---|
| # | EAVE CONSTRUCTION DESCRIPTION | Eave Allowed? | Vent Allowed? | Eave Allowed? | Vent Allowed? |
| 1 | **Stucco Soffit with Fascia Protected.** Horizontal soffit or angled overhang and 2x fascia enclosed with 7/8" Portland cement plaster | Y | Y[1] | Y | N |
| 2 | **Stucco Soffit with Fascia Exposed.** Horizontal soffit or angled overhang with 7/8" Portland cement plaster, exposed 2x fascia | Y | Y[1] | NOT PERMITTED | |
| 3 | **Foam Trim with Stucco.** 7/8" Portland cement plaster with foam trim over brown coat and enclosed with color coat | Y | N | Y | N |
| 4 | **Heavy Timber.** Exposed rafter tails (4 x 6 or larger), supporting 2" T&G roof decking (If fascia is used it must be 3 x 6 or larger) | Y | N | Y | N |
| 5 | **Exposed Wood with Drywall Underlayment.** Soffit enclosed with ½" Type X gypsum wallboard under 1x smooth finished starterboard, tight-fitting or caulked. 2x fascia. | Y | Y[1] | NOT PERMITTED | |
| 6 | **Wood Soffit, Fascia Exposed, with Fire-Resistive Underlayment.** 2x wood fascia as plant-on over 5/8" Type X gypsum wallboard or 7/8" Portland cement plaster or 2-2x wood blocking. Soffit may be constructed of combustible material with a 5/16" minimum thickness over 5/8" Type X gypsum wallboard or 7/8" Portland cement plaster. | Y | Y[1] | Y | N |
| 7 | **Cementitious Siding on Soffit and as Underlayment Behind Fascia.** 5/16" min. thickness non-combustible cementitious siding on soffit. 2x wood fascia installed over backing of cementitious siding backing or other backing as approved in detail #6. | Y | Y[1] | Y | N |
| 8 | **Cementitious Siding on Soffit** 5/16" min. thickness non-combustible cementitious siding – 2x fascia without underlayment | Y | Y[1] | NOT PERMITTED | |
| 9 | **Enclosed Eave with Exposed Wood.** Enclosed eave with solid combustible materials (wood) ¾ inch thickness – no exposed rafter tails. All joints must be tight fitting and gaps caulked. | Y | Y[1] | NOT PERMITTED | |
| 10 | **Open Eave with Exposed Wood.** 2x rafter tails with 2x blocking, and 1x exterior grade starterboard or 1/2" CCX plywood. All joints must be tight fitting and gaps caulked. | Y | Y[1] | NOT PERMITTED | |

[1] Vents are permitted in the eave assembly of Basic Fire-Resistive Construction only under the following conditions:

a) When allowed by the Fire Authority Having Jurisdiction, on eaves that do not face the wildland fuels; or,

b) Enclosed eaves may be vented on the underside of the eave closest to the fascia provided the closest edge of the vent opening is at least 12 inches from the exterior wall.

COUNTY OF SAN DIEGO • DEPARTMENT OF PLANNING AND LAND USE
BUILDING DIVISION

# GUIDANCE DOCUMENT
# IGNITION RESISTANT EAVES

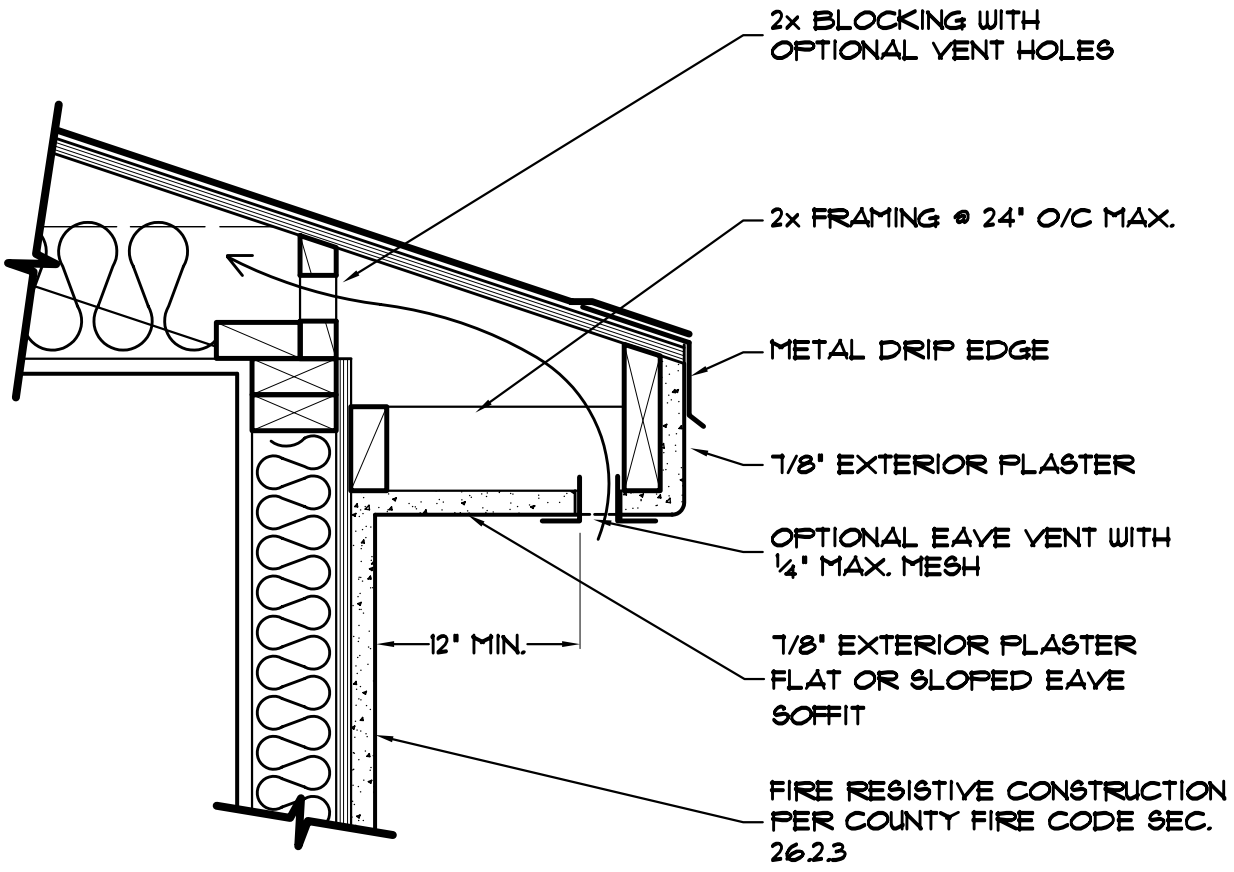


| | |
|---|---|
| DATE: 3-21-2005 | **DETAIL 1 - BASIC** |
| SCALE: NONE | |
| FORM: DPLU #198 | |
| **3** OF 15 SHEETS | **STUCCO SOFFIT WITH FASCIA PROTECTED** |

COUNTY OF SAN DIEGO • DEPARTMENT OF PLANNING AND LAND USE
BUILDING DIVISION

# GUIDANCE DOCUMENT
# IGNITION RESISTANT EAVES

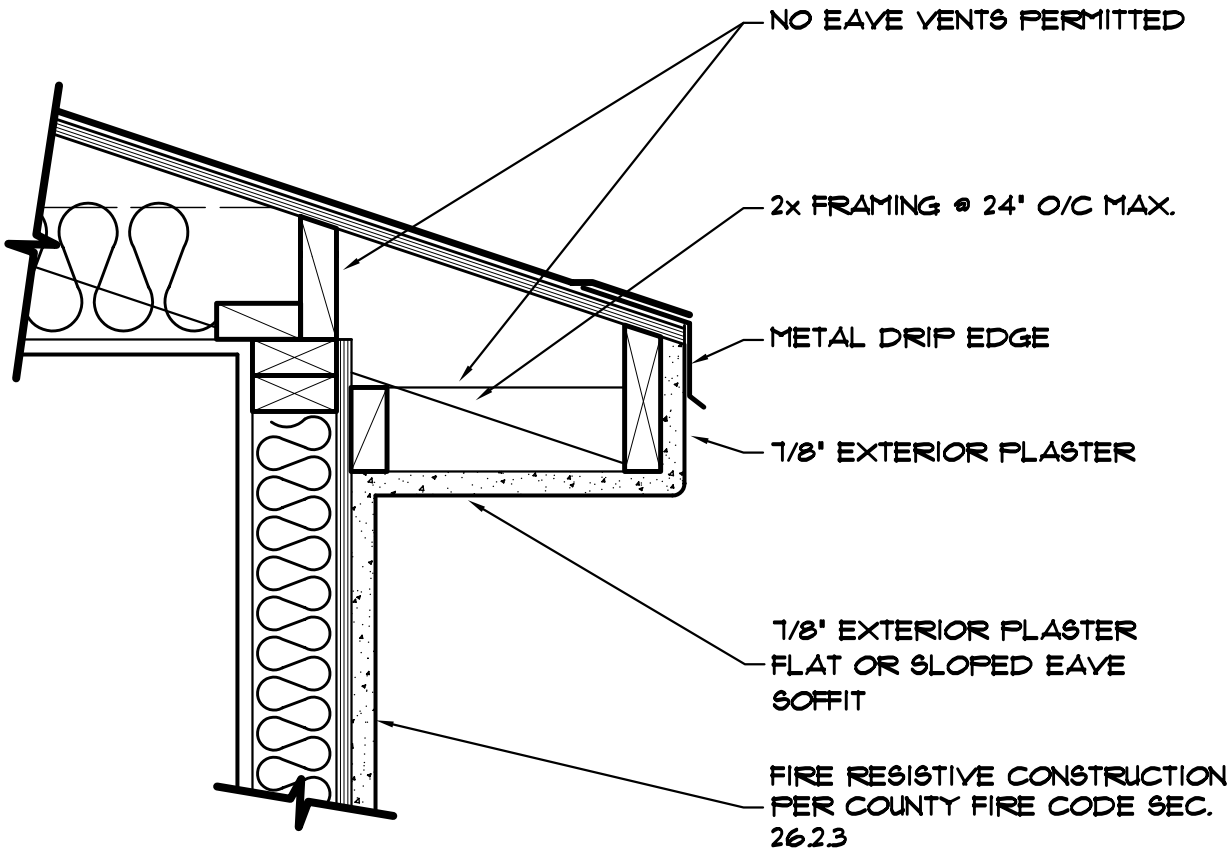


| | |
|---|---|
| DATE: 3-21-2005 | **DETAIL 1 - ENHANCED** |
| SCALE: NONE | |
| FORM: DPLU #198 | |
| **4** OF 15 SHEETS | **STUCCO SOFFIT WITH FASCIA PROTECTED** |

COUNTY OF SAN DIEGO • DEPARTMENT OF PLANNING AND LAND USE
BUILDING DIVISION

# GUIDANCE DOCUMENT
# IGNITION RESISTANT EAVES

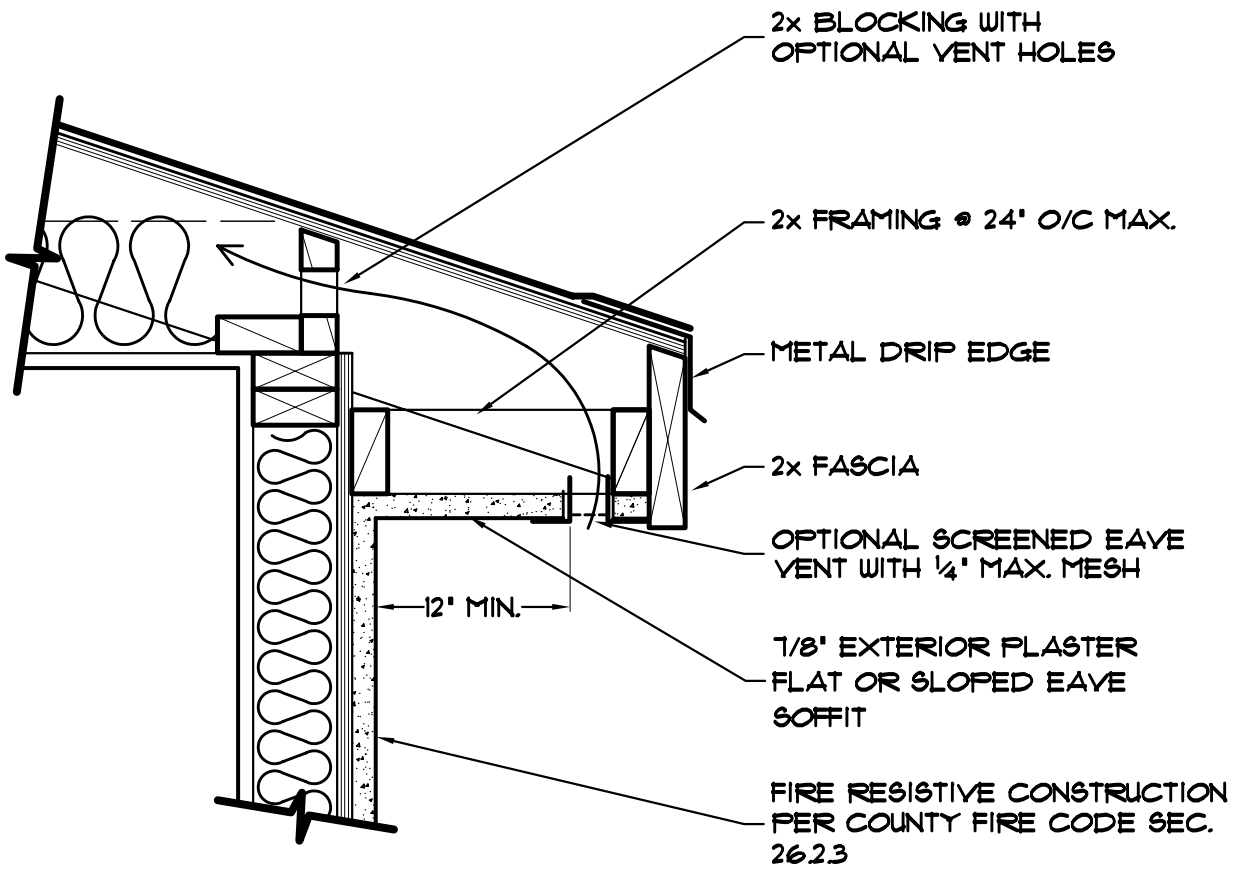


| | |
|---|---|
| DATE: 3-21-2005 | **DETAIL 2 - BASIC** |
| SCALE: NONE | |
| FORM: DPLU #198 | |
| **5** OF 15 SHEETS | **STUCCO SOFFIT WITH FASCIA EXPOSED** |

COUNTY OF SAN DIEGO • DEPARTMENT OF PLANNING AND LAND USE
BUILDING DIVISION

# GUIDANCE DOCUMENT
# IGNITION RESISTANT EAVES

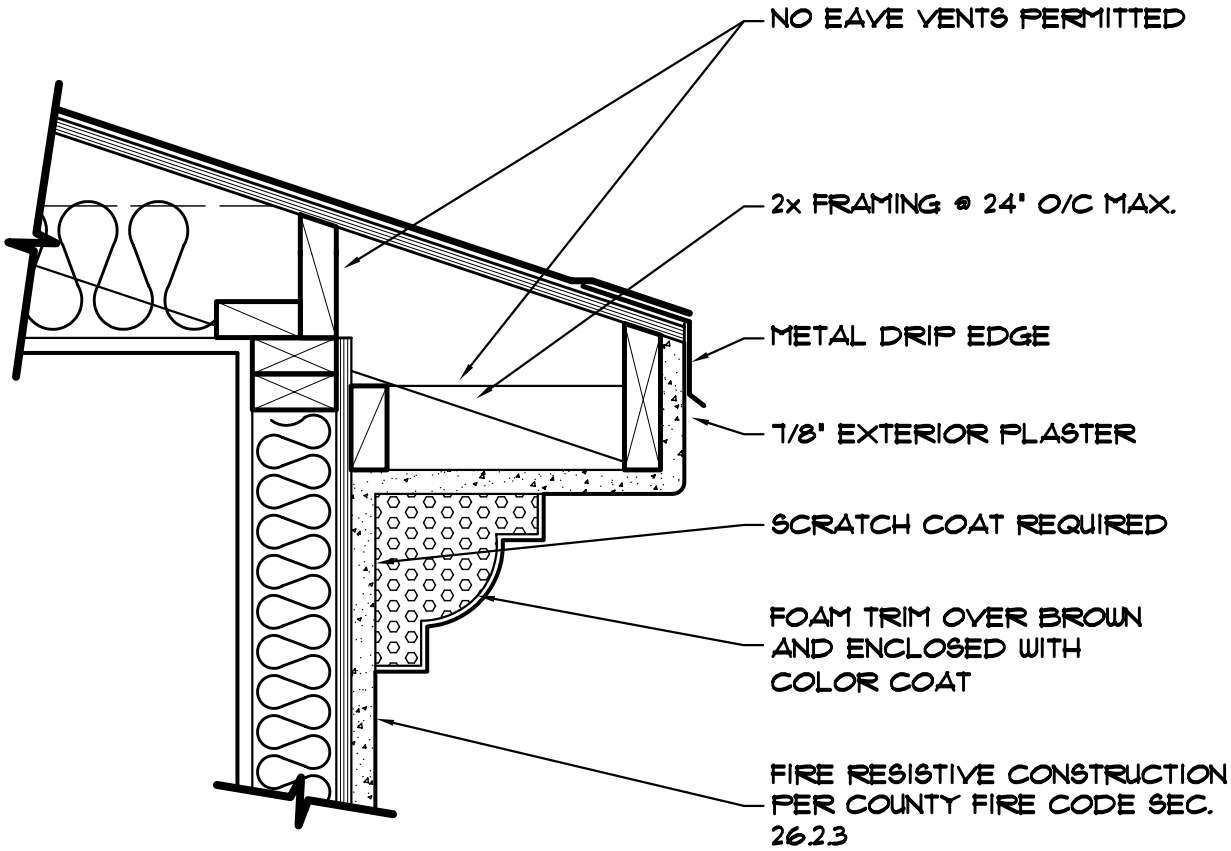


| | |
|---|---|
| DATE: 3-21-2005 | **DETAIL 3 - BASIC / ENHANCED** |
| SCALE: NONE | |
| FORM: DPLU #198 | |
| **6** OF 15 SHEETS | **FOAM TRIM WITH STUCCO** |

COUNTY OF SAN DIEGO • DEPARTMENT OF PLANNING AND LAND USE
BUILDING DIVISION

# GUIDANCE DOCUMENT
# IGNITION RESISTANT EAVES

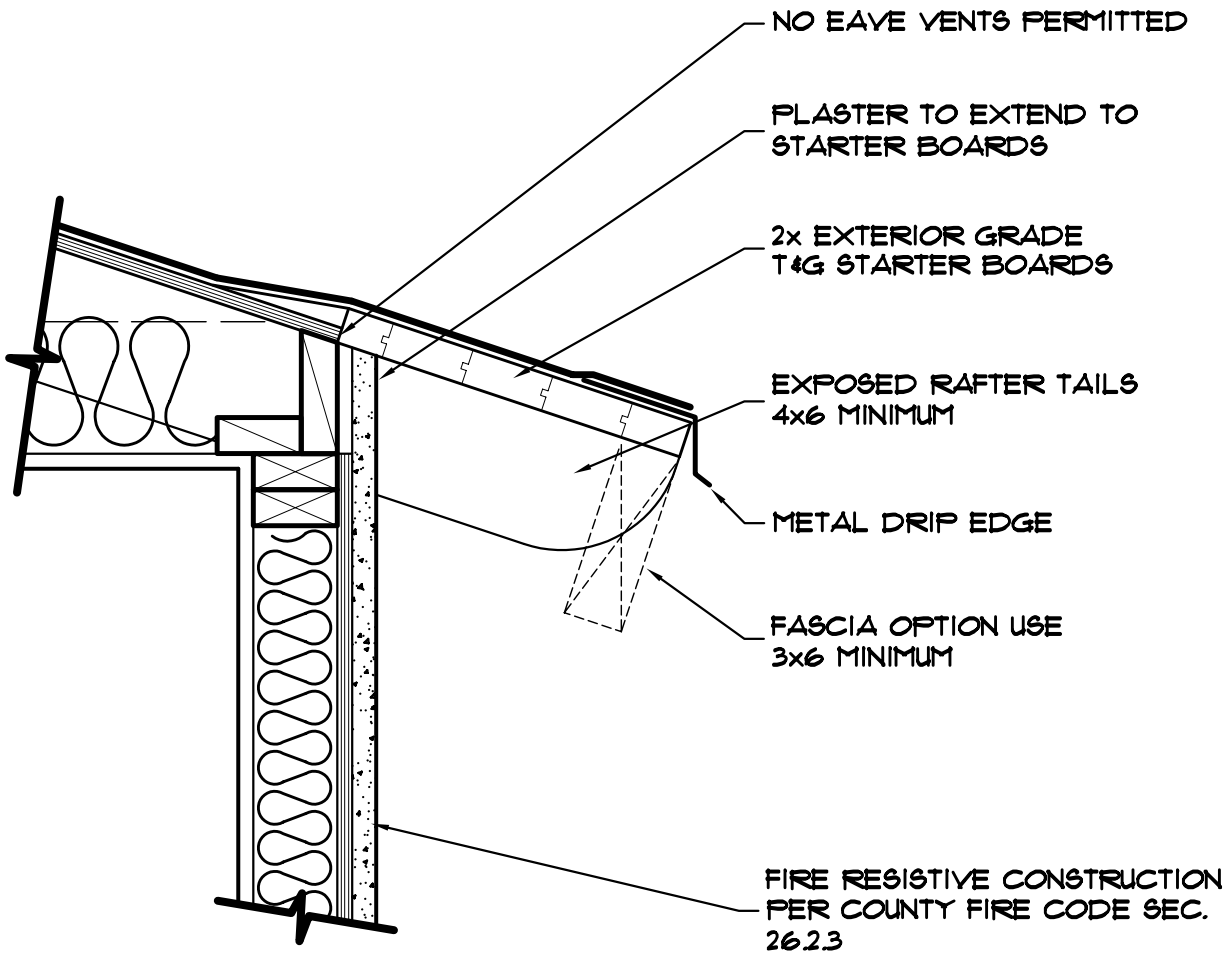


| | |
|---|---|
| DATE: 3-21-2005 | **DETAIL 4 - BASIC / ENHANCED** |
| SCALE: NONE | |
| FORM: DPLU #198 | |
| **7** OF 15 SHEETS | **HEAVY TIMBER** |

COUNTY OF SAN DIEGO • DEPARTMENT OF PLANNING AND LAND USE
BUILDING DIVISION

# GUIDANCE DOCUMENT
# IGNITION RESISTANT EAVES

NOTE: ALL JOINTS MUST BE TIGHT FITTING AND CAULKED

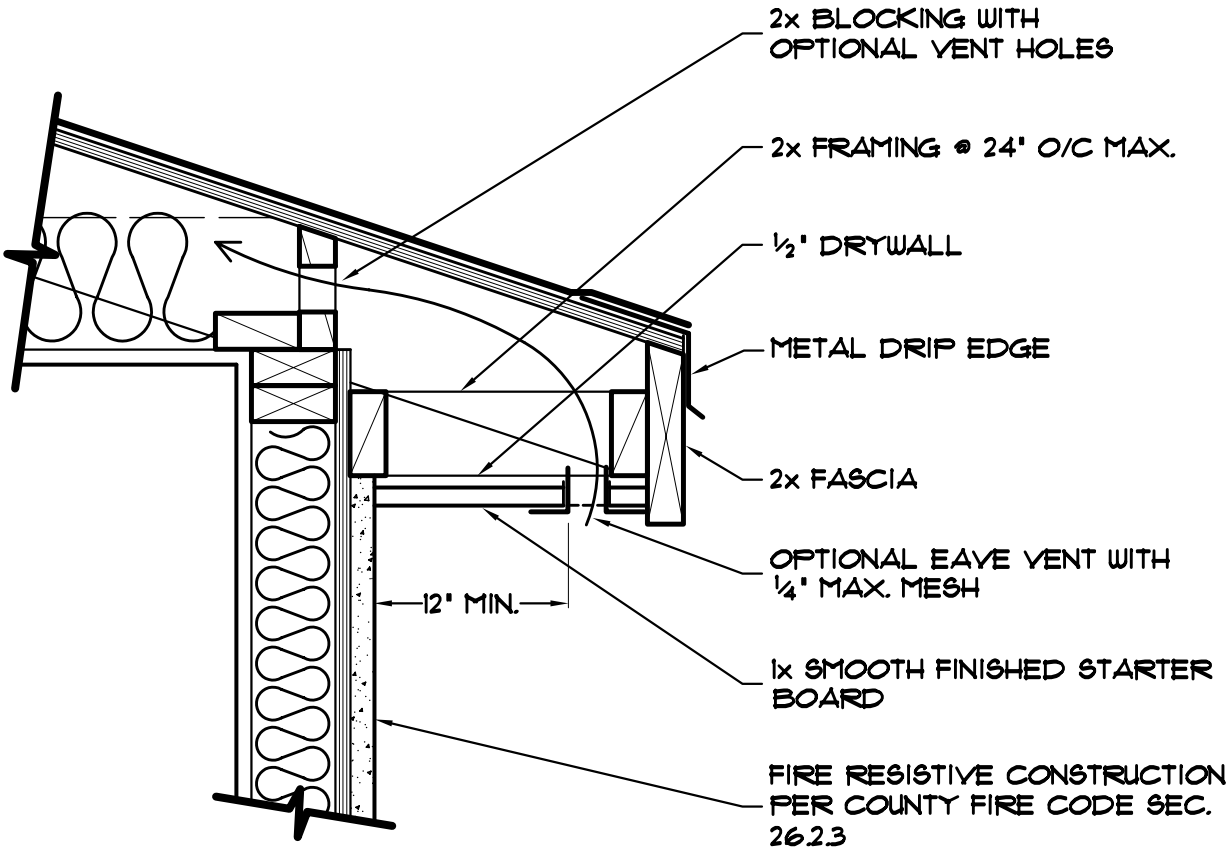


| | |
|---|---|
| DATE: 3-21-2005 | **DETAIL 5 - BASIC** |
| SCALE: NONE | |
| FORM: DPLU #198 | |
| **8** OF 15 SHEETS | **EXPOSED WOOD WITH DRYWALL UNDERLAYMENT** |

COUNTY OF SAN DIEGO • DEPARTMENT OF PLANNING AND LAND USE
BUILDING DIVISION

# GUIDANCE DOCUMENT
# IGNITION RESISTANT EAVES

NOTE: ALL JOINTS MUST BE TIGHT FITTING AND CAULKED

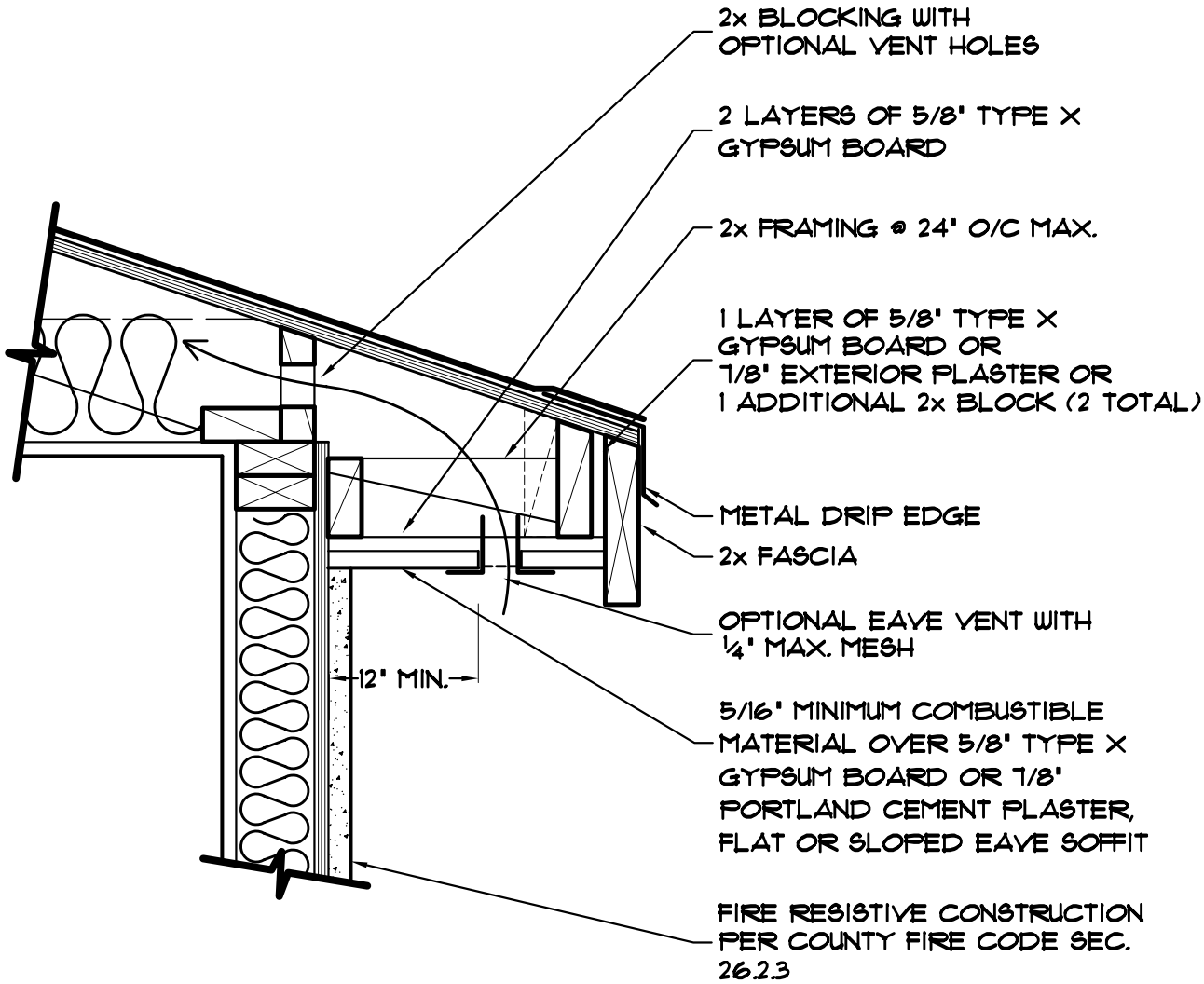


| | |
|---|---|
| DATE: 3-21-2005 | **DETAIL 6 - BASIC** |
| SCALE: NONE | |
| FORM: DPLU #198 | |
| **9** OF 15 SHEETS | **WOOD SOFFIT FASCIA EXPOSED WITH FIRE RESISTIVE UNDERLAYMENT** |

COUNTY OF SAN DIEGO • DEPARTMENT OF PLANNING AND LAND USE
BUILDING DIVISION

# GUIDANCE DOCUMENT
# IGNITION RESISTANT EAVES

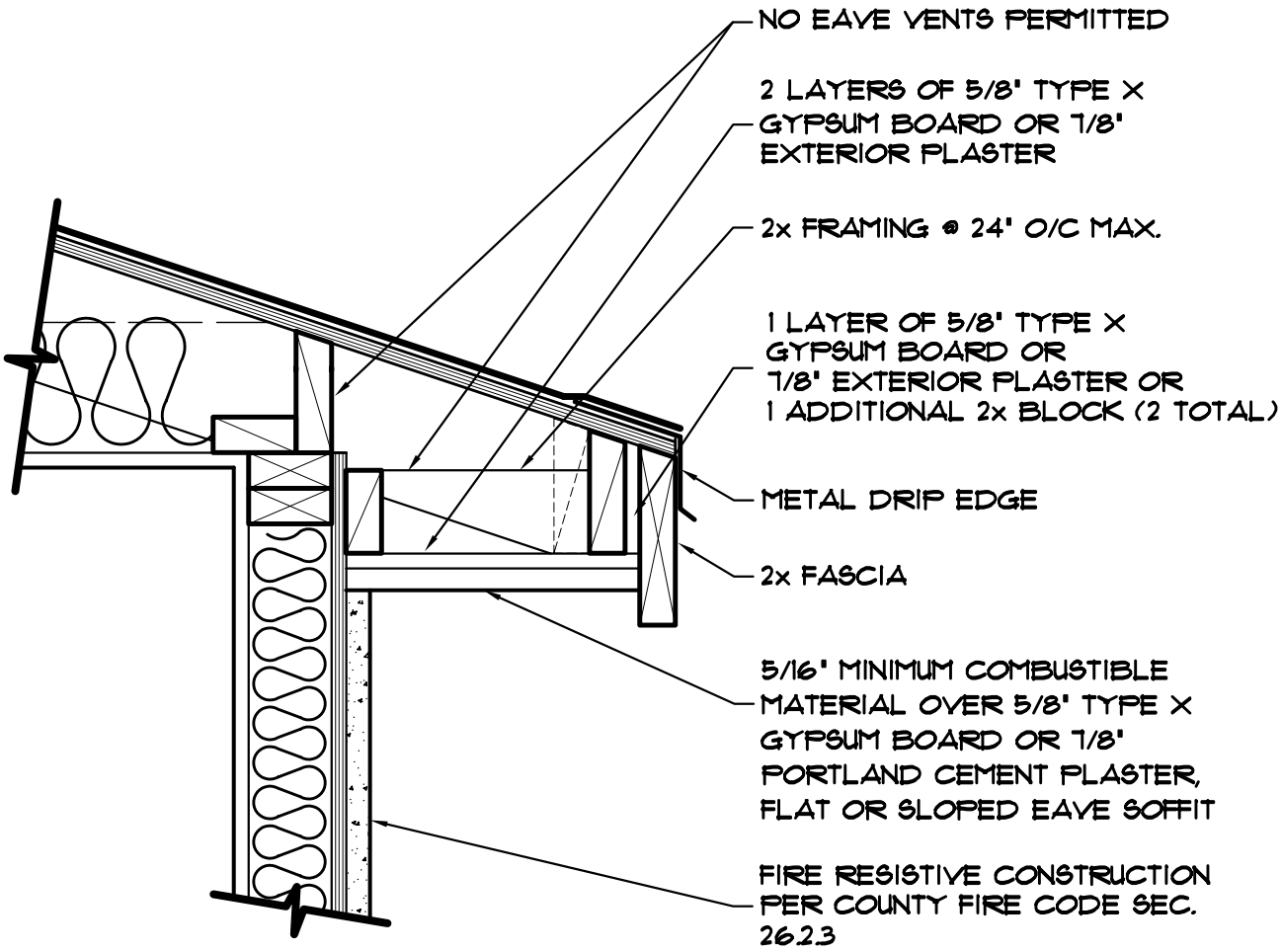


| | |
|---|---|
| DATE: 3-21-2005 | **DETAIL 6 - ENHANCED** |
| SCALE: NONE | |
| FORM: DPLU #198 | |
| **10** OF 15 SHEETS | **WOOD SOFFIT FASCIA EXPOSED WITH FIRE RESISTIVE UNDERLAYMENT** |

COUNTY OF SAN DIEGO • DEPARTMENT OF PLANNING AND LAND USE
BUILDING DIVISION

# GUIDANCE DOCUMENT
# IGNITION RESISTANT EAVES

NOTE: ALL JOINTS MUST BE TIGHT FITTING AND CAULKED

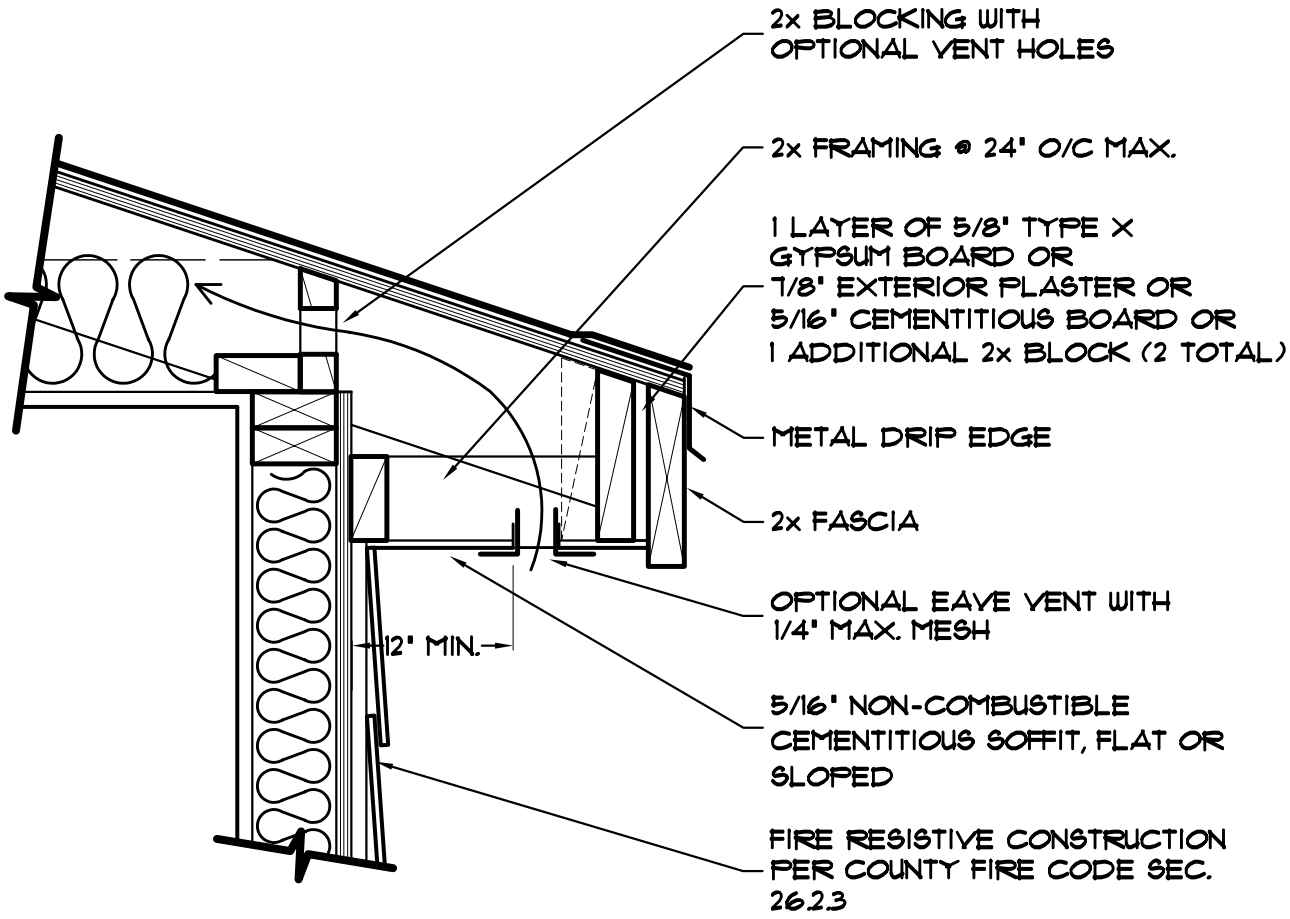


| | |
|---|---|
| DATE: 3-21-2005 | **DETAIL 7 - BASIC** |
| SCALE: NONE | |
| FORM: DPLU #198 | |
| **11** OF 15 SHEETS | **CEMENTITIOUS SIDING ON SOFFIT AND AS UNDERLAYMENT BEHIND FASCIA** |

COUNTY OF SAN DIEGO • DEPARTMENT OF PLANNING AND LAND USE
BUILDING DIVISION

# GUIDANCE DOCUMENT
# IGNITION RESISTANT EAVES

NOTE: ALL JOINTS MUST BE TIGHT FITTING AND CAULKED

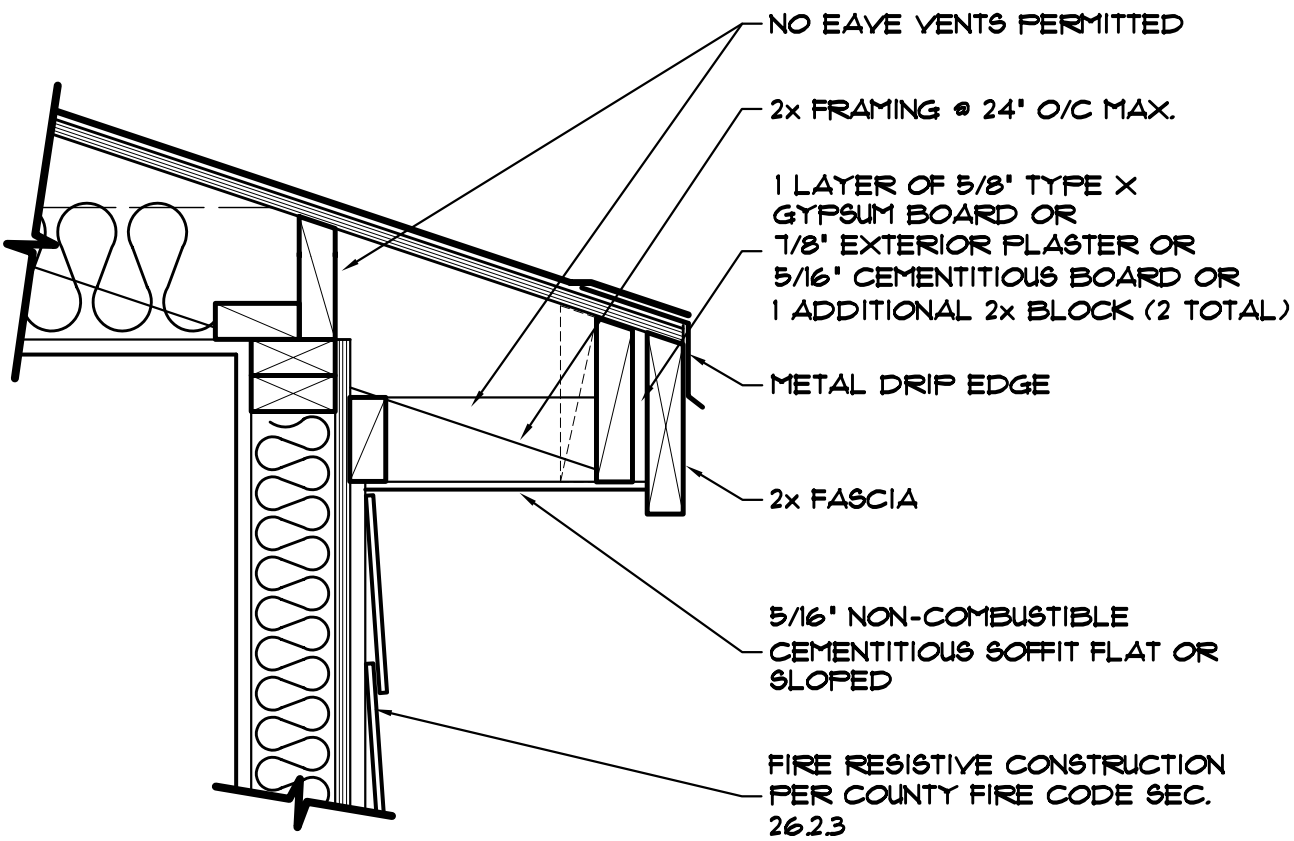


| | |
|---|---|
| DATE: 3-21-2005 | **DETAIL 7 - ENHANCED** |
| SCALE: NONE | |
| FORM: DPLU #198 | |
| **12** OF 15 SHEETS | **CEMENTITIOUS SIDING ON SOFFIT AND AS UNDERLAYMENT BEHIND FASCIA** |

COUNTY OF SAN DIEGO • DEPARTMENT OF PLANNING AND LAND USE
BUILDING DIVISION

# GUIDANCE DOCUMENT
# IGNITION RESISTANT EAVES

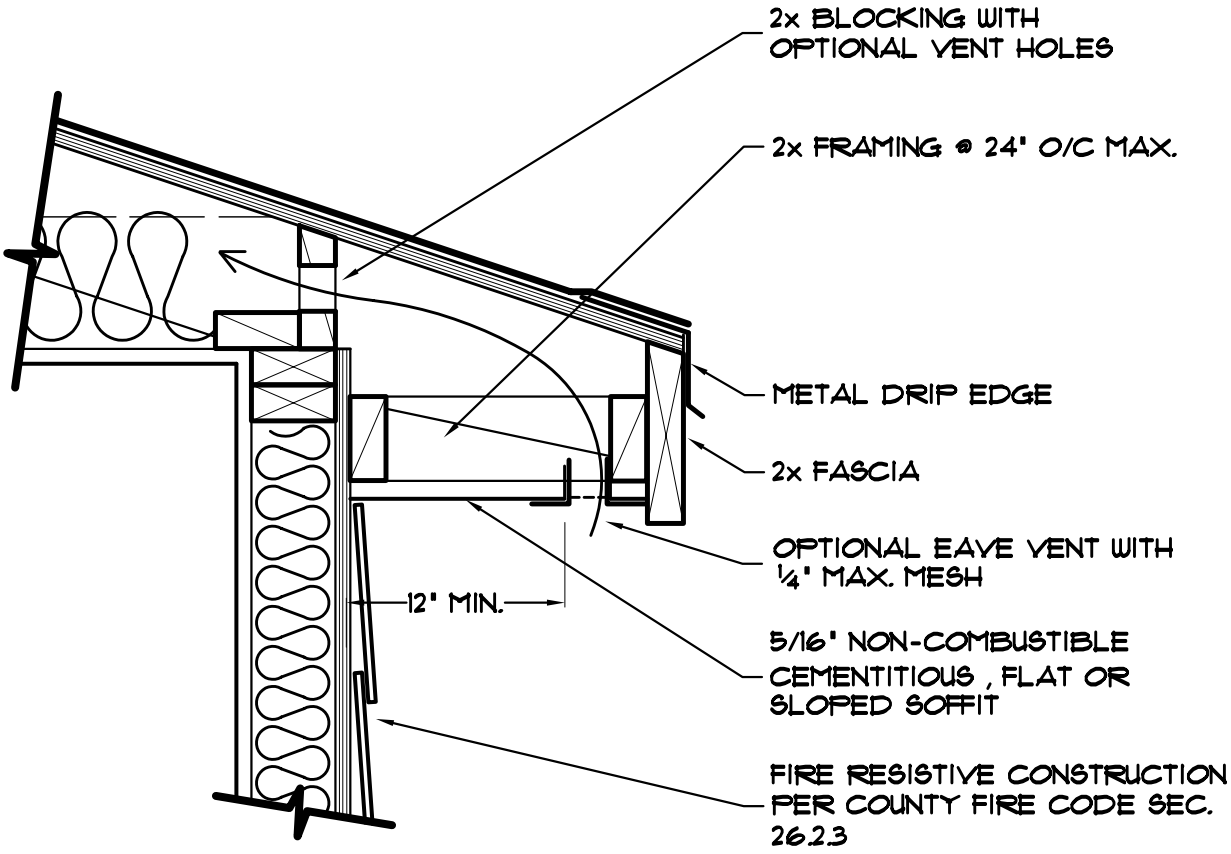


| | |
|---|---|
| DATE: 3-21-2005 | **DETAIL 8 - BASIC** |
| SCALE: NONE | |
| FORM: DPLU #198 | |
| **13** OF 15 SHEETS | **CEMENTITIOUS SIDING ON SOFFIT** |

COUNTY OF SAN DIEGO • DEPARTMENT OF PLANNING AND LAND USE
BUILDING DIVISION

# GUIDANCE DOCUMENT
# IGNITION RESISTANT EAVES

NOTE: ALL JOINTS MUST BE TIGHT FITTING AND CAULKED

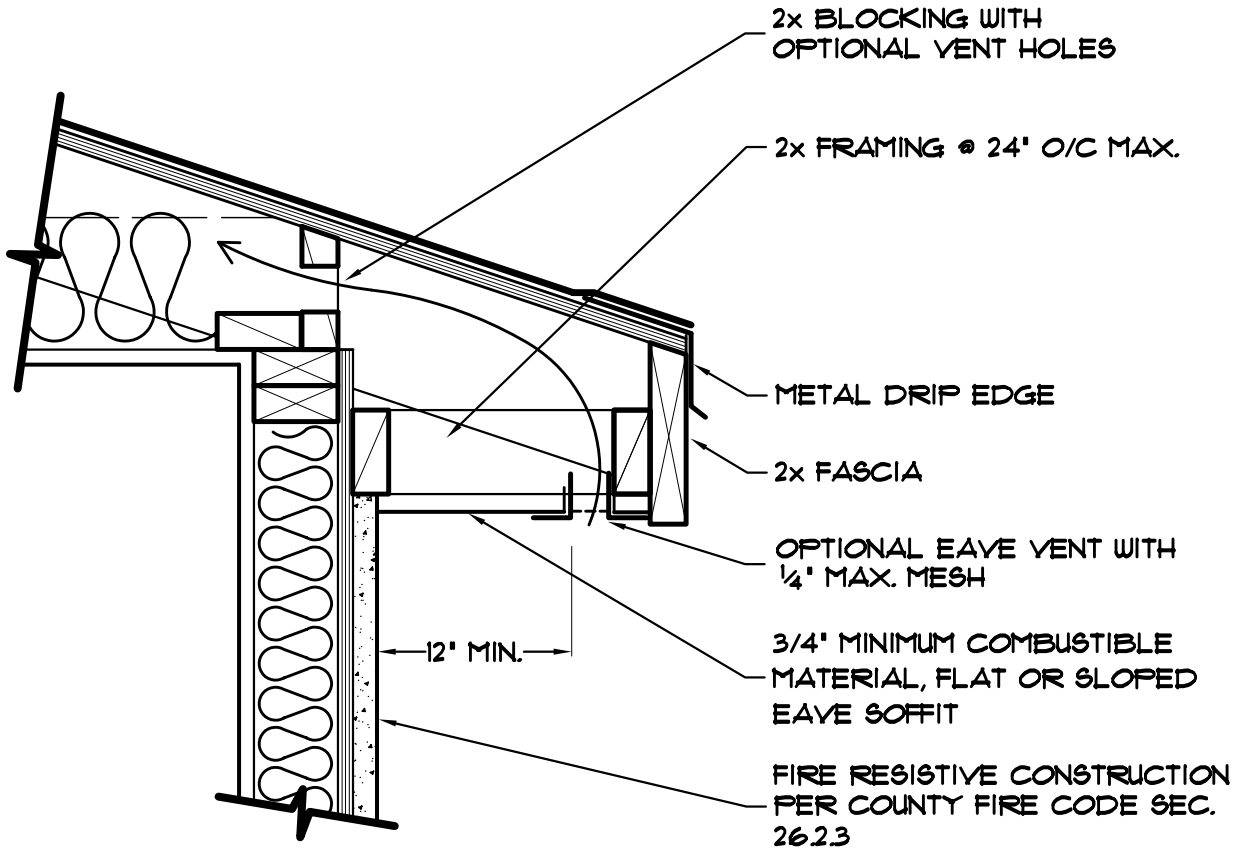


| | |
|---|---|
| DATE: 3-21-2005 | **DETAIL 9 - BASIC** |
| SCALE: NONE | |
| FORM: DPLU #198 | |
| **14** OF 15 SHEETS | **ENCLOSED EAVE WITH EXPOSED WOOD** |

COUNTY OF SAN DIEGO • DEPARTMENT OF PLANNING AND LAND USE
BUILDING DIVISION

# GUIDANCE DOCUMENT
# IGNITION RESISTANT EAVES

NOTE: ALL JOINTS MUST BE TIGHT FITTING AND CAULKED

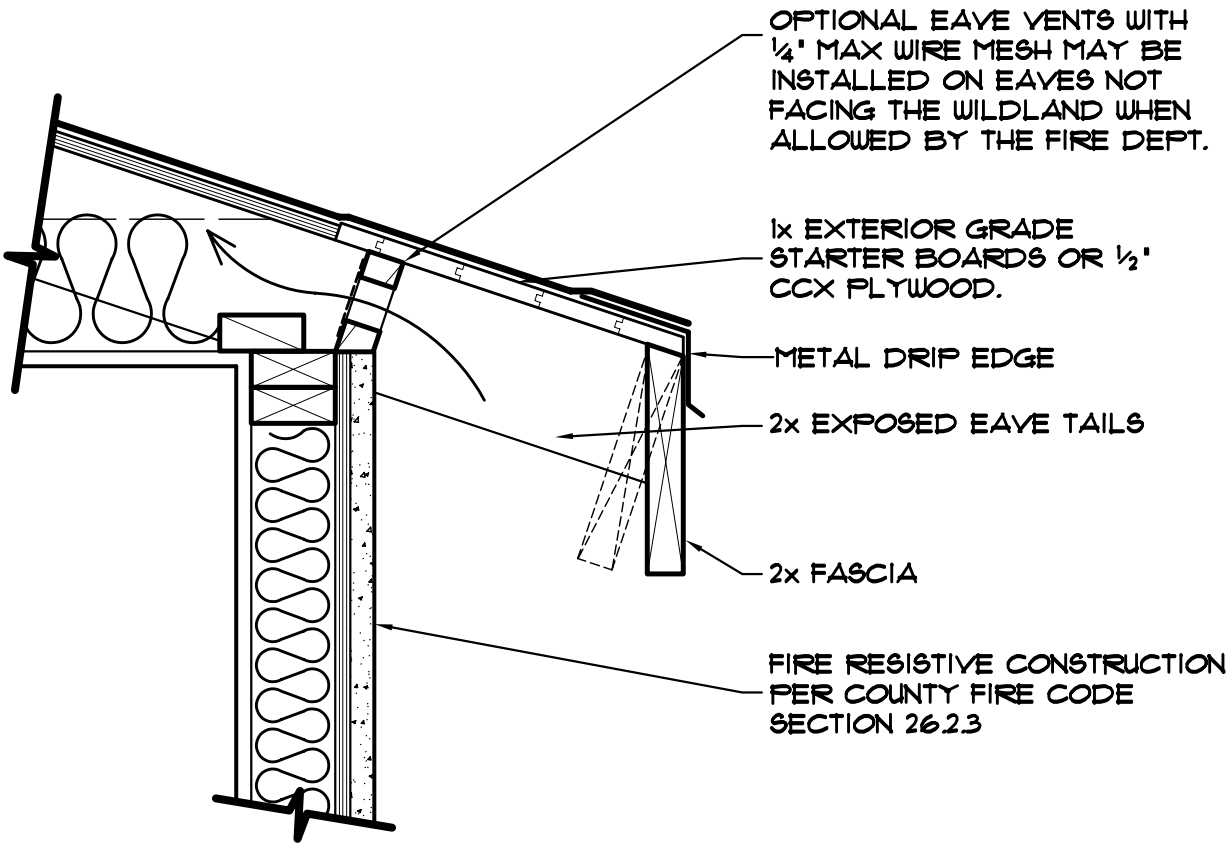


| | |
|---|---|
| DATE: 3-21-2005 | **DETAIL 10 - BASIC** |
| SCALE: NONE | |
| FORM: DPLU #198 | |
| **15** OF 15 SHEETS | **OPEN EAVE WITH EXPOSED WOOD** |