COUNTY OF SAN DIEGO • DEPARTMENT OF PLANNING AND LAND USE
BUILDING DIVISION

WATER HEATER STRAPPING REQUIREMENTS

Uniform Plumbing Code Section 510.5 requires that all water heaters are to be supported and strapped to prevent movement during an earthquake.

Two metal straps, not less than 22 gauge, nor less than 5/8" wide will be used. One strap shall be placed in the upper 1/3 of the water heater and the other shall be placed in the bottom 1/3 of the water heater. The means of connection to the structure shall be made by the use of screws not less than 1/4" in size with a minimum penetration of 1-1/2" into a framing member of the wall. A cut washer shall be used between the head of the screw and the strap to insure a positive support.

SAMPLE #1

Drill pilots on centerline of stud, insert screws through punched holes in strap.

These types of supports are over-the-counter products sold as a packaged unit.

This strap is installed 6" above the control unit.

This 18" stand is required for heaters installed in a garage location.

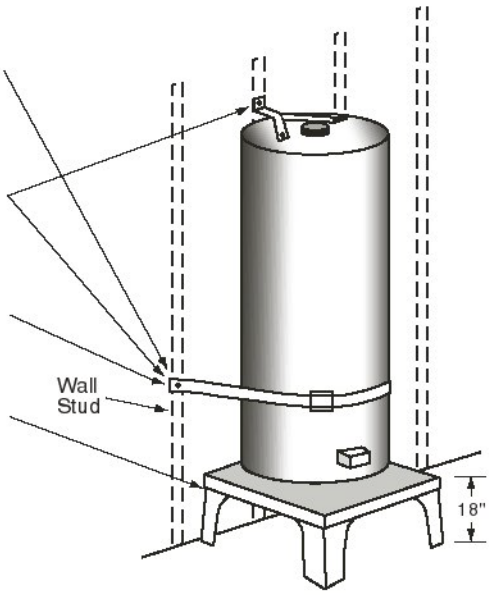

SAMPLE #2

Drill pilots on centerline of stud, insert screws through punched holes in strap.

Minimum 22 Gauge metal strap material installed within the top 1/3 of the heater and the bottom 1/3 of the heater.

Minimum 1/4" screws with minimum 1 1/2" penetration are allowed.

This 18" stand is required for heaters installed in a garage location.

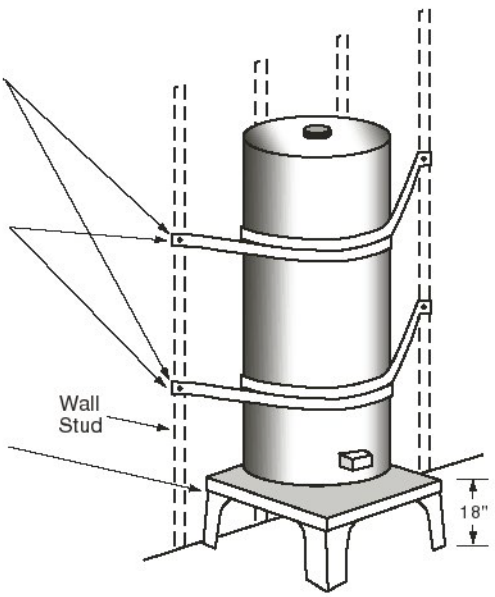

DPLU#701 (12/99)

5201 RUFFIN ROAD, SUITE B, SAN DIEGO, CA 92123-1666 ● (858) 565-5920 ● (888) 336-7553
200 EAST MAIN ST.- SIXTH FLOOR, EL CAJON, CA 92020-3912 ● (619) 441-4030
338 VIA VERA CRUZ - SUITE 201, SAN MARCOS, CA 92069-2620 ● (760) 471-0730